	Work Item	Time Minutes	Prob #1	Prob #2	Prob #3	Prob #4	Applied Time (Minutes)	Labor /Hour	Cost
	A	B	C	D	E	F	G	H	I
							B * (C Thru F)		H * (G/60)

UNE-P ISDN PRI, DSS Per DS1 Facility EXISTING SERVICE (con't)

22502	**Direct Cost**					$20.71
22503						
22504		**Cost Calculation**			**Cost Factor**	**Cost**
22505						
22506		**B**		**C**	**D**	**E**
22507	***Marketing & Business Fees***					
22508	Product Management Expense	**D22508*E22502**			0.019957	$0.41
22509	Sales Expense	**D22509*E22502**			0.011877	$0.25
22510	Product Advertising Expense	**D22510*E22502**			0.000000	$0.00
22511	Business Fees (Other Operating Taxes)	**D22511*Sum(E22502:E22510)**			0.001483	$0.03
22512	***Total Marketing & Business Fees***	**Sum(E22502:E22511)**				$0.69
22513						
22514	***Sub-Total Direct Cost & Marketing***	**E22502+E22512**				$21.40
22515						
22516	***Other Direct Expenses***					
22517	Network Operations	**D22517*E22514**			0.034832	$0.75
22518	Network Support Assets	**D22518*E22514**			0.014703	$0.31
22519	General Support Assets	**D22519*E22514**			0.088742	$1.90
22520	General Purpose Computers	**D22520*E22514**			0.043342	$0.93
22521	Uncollectible	**D22521*E22514**			0.003786	$0.08
22522	Accounting & Finance Expense	**D22522*E22514**			0.007346	$0.16
22523	Human Resources Expense	**D22523*E22514**			0.008294	$0.18
22524	Information Management Expense	**D22524*E22514**			0.070887	$1.52
22525	Intangibles	**D22525*E22514**			0.000000	$0.00
22526	***Total Other Direct Expenses***	**Sum(E22517:E22525)**				$5.82
22527						
22528	***TELRIC***	**E22517+E22526**				$27.21
22529						
22530	***Common***					
22531	Executive Expense	**D22531*E22528**			0.011267	$0.31
22532	Planning Expense	**D22532*E22528**			0.000525	$0.01
22533	External Relations Expense	**D22533*E22528**			0.037846	$1.03
22534	Legal Expense	**D22534*E22528**			0.004717	$0.13
22535	Other Procurement Expense	**D22535*E22528**			0.001860	$0.05
22536	Research & Development Expense	**D22536*E22528**			0.000006	$0.00
22537	Other General and Admin Expense	**D22537*E22528**			0.015064	$0.41
22538	***Common Costs***	**Sum(E22531:E22537)**				$1.94
22539						
22540	***TELRIC + Common Costs***	**E22528+E22538**				$29.15

NONRECURRING COST DETAIL SUMMARY

Study Name: NONRECURRING ELEMENTS
Study Year: 2002
Analyst: Deffley/Eoriatti
Product Group: Interconnection

State: South Dakota

Work Item	Time Minutes	Prob #1	Prob #2	Prob #3	Prob #4	Applied Time (Minutes)	Labor /Hour	Cost
A	B	C	D	E	F	G B * (C Thru F)	H	I H * (G/60)
UNE-P ISDN PRI, DSS Per First Trunk EXISTING SERVICE								
ADD								
-INTERCONNECT SERVICE CENTER								
.5 probability is percent of time this activity will occur.								
Review LSR for completeness and accuracy, contractual entries	3	1.000				3.00	$40.03	$2.00
Summary Bill List-Look up Billing Telephone Number, tax code, and bill date	2	1.000				2.00	$40.03	$1.33
Verify Qwest end user Customer Service Record if order issuance applicable to this product	2	1.000				2.00	$40.03	$1.33
Determine if the end user has Qwest directory advertising	1	1.000				1.00	$40.03	$0.67
Determine if the end user has Qwest retail contract	1	1.000				1.00	$40.03	$0.67
Determine critical dates	1	1.000				1.00	$40.03	$0.67
If directory advertising or retail contract or both, issue order to remove information from account	1	0.500				0.50	$40.03	$0.33
Type, review and submit to customer the Firm Order Confirmation (FOC)	3	1.000				3.00	$40.03	$2.00
Input order into service order processor. Type and format order for billing and provisioning	10	1.000				10.00	$40.03	$6.67
Ensure order is successfully distributed to the systems and is ready for provisioning	3	1.000				3.00	$40.03	$2.00
Subtotal - INTERCONNECT SERVICE CENTER						**26.50**		**$17.68**
-SERVICE DESIGN CENTER - IMPLEMENTOR								
Access Work Authorization	2	1.000				2.00	$44.31	$1.48
Closeout activities	3	1.000				3.00	$44.31	$2.22
Subtotal - SERVICE DESIGN CENTER - IMPLEMENTOR						**5.00**		**$3.69**
Total For Service:						**31.50**		**$21.37**

NONRECURRING COST DETAIL SUMMARY

Study Name: NONRECURRING ELEMENTS
Study Year: 2002
Analyst: Deffley/Eoriatti
Product Group: Interconnection

ENRC Version: 2.16
Date: 06/03/02

State: South Dakota

	Work Item	Time Minutes	Prob #1	Prob #2	Prob #3	Prob #4	Applied Time (Minutes)	Labor /Hour	Cost
	A	B	C	D	E	F	G	H	I
							B * (C Thru F)		H * (G/60)

UNE-P ISDN PRI, DSS Per First Trunk EXISTING SERVICE (con't)

		Cost Calculation		Cost Factor	Cost
		B	C	D	E
22592	**Direct Cost**				$21.37
22593					
22594					
22595					
22596					
22597	***Marketing & Business Fees***				
22598	Product Management Expense	D22598*E22592		0.019957	$0.43
22599	Sales Expense	D22599*E22592		0.011877	$0.25
22600	Product Advertising Expense	D22600*E22592		0.000000	$0.00
22601	Business Fees (Other Operating Taxes)	D22601*Sum(E22592:E22600)		0.001483	$0.03
22602	***Total Marketing & Business Fees***	Sum(E22592:E22601)			$0.71
22603					
22604	***Sub-Total Direct Cost & Marketing***	E22592+E22602			$22.09
22605					
22606	***Other Direct Expenses***				
22607	Network Operations	D22607*E22604		0.034832	$0.77
22608	Network Support Assets	D22608*E22604		0.014703	$0.32
22609	General Support Assets	D22609*E22604		0.088742	$1.96
22610	General Purpose Computers	D22610*E22604		0.043342	$0.96
22611	Uncollectible	D22611*E22604		0.003786	$0.08
22612	Accounting & Finance Expense	D22612*E22604		0.007346	$0.16
22613	Human Resources Expense	D22613*E22604		0.008294	$0.18
22614	Information Management Expense	D22614*E22604		0.070887	$1.57
22615	Intangibles	D22615*E22604		0.000000	$0.00
22616	***Total Other Direct Expenses***	Sum(E22607:E22615)			$6.01
22617					
22618	***TELRIC***	E22607+E22616			$28.09
22619					
22620	***Common***				
22621	Executive Expense	D22621*E22618		0.011267	$0.32
22622	Planning Expense	D22622*E22618		0.000525	$0.01
22623	External Relations Expense	D22623*E22618		0.037846	$1.06
22624	Legal Expense	D22624*E22618		0.004717	$0.13
22625	Other Procurement Expense	D22625*E22618		0.001860	$0.05
22626	Research & Development Expense	D22626*E22618		0.000006	$0.00
22627	Other General and Admin Expense	D22627*E22618		0.015064	$0.42
22628	***Common Costs***	Sum(E22621:E22627)			$2.00
22629					
22630	***TELRIC + Common Costs***	E22618+E22628			$30.09

NONRECURRING COST DETAIL SUMMARY

Study Name: NONRECURRING ELEMENTS
Study Year: 2002
Analyst: Deffley/Eoriatti
Product Group: Interconnection

State: South Dakota

Work Item	Time Minutes	Prob #1	Prob #2	Prob #3	Prob #4	Applied Time (Minutes)	Labor /Hour	Cost
A	B	C	D	E	F	G B * (C Thru F)	H	I H * (G/60)
UNE-P ISDN PRI, DSS Per Each Addl Trunk EXISTING SERVICE								
ADD								
-INTERCONNECT SERVICE CENTER								
Input order into service order processor. Type and format order for billing and provisioning	3	1.000				3.00	$40.03	$2.00
Subtotal - INTERCONNECT SERVICE CENTER						**3.00**		**$2.00**
Total For Service:						**3.00**		**$2.00**

NONRECURRING COST DETAIL SUMMARY

Study Name: NONRECURRING ELEMENTS
Study Year: 2002
Analyst: Deffley/Eoriatti
Product Group: Interconnection

State: South Dakota

	Work Item	Time Minutes	Prob #1	Prob #2	Prob #3	Prob #4	Applied Time (Minutes)	Labor /Hour	Cost
	A	B	C	D	E	F	G	H	I
							B * (C Thru F)		H * (G/60)

UNE-P ISDN PRI, DSS Per Each Addl Trunk EXISTING SERVICE (con't)

		Cost Calculation		Cost Factor	Cost
		B	C	D	E
22682	**Direct Cost**				$2.00
22683					
22684					
22685					
22686					
22687	***Marketing & Business Fees***				
22688	Product Management Expense	D22688*E22682		0.019957	$0.04
22689	Sales Expense	D22689*E22682		0.011877	$0.02
22690	Product Advertising Expense	D22690*E22682		0.000000	$0.00
22691	Business Fees (Other Operating Taxes)	D22691*Sum(E22682:E22690)		0.001483	$0.00
22692	***Total Marketing & Business Fees***	Sum(E22682:E22691)			$0.07
22693					
22694	***Sub-Total Direct Cost & Marketing***	E22682+E22692			$2.07
22695					
22696	***Other Direct Expenses***				
22697	Network Operations	D22697*E22694		0.034832	$0.07
22698	Network Support Assets	D22698*E22694		0.014703	$0.03
22699	General Support Assets	D22699*E22694		0.088742	$0.18
22700	General Purpose Computers	D22700*E22694		0.043342	$0.09
22701	Uncollectible	D22701*E22694		0.003786	$0.01
22702	Accounting & Finance Expense	D22702*E22694		0.007346	$0.02
22703	Human Resources Expense	D22703*E22694		0.008294	$0.02
22704	Information Management Expense	D22704*E22694		0.070887	$0.15
22705	Intangibles	D22705*E22694		0.000000	$0.00
22706	***Total Other Direct Expenses***	Sum(E22697:E22705)			$0.56
22707					
22708	***TELRIC***	E22697+E22706			$2.63
22709					
22710	***Common***				
22711	Executive Expense	D22711*E22708		0.011267	$0.03
22712	Planning Expense	D22712*E22708		0.000525	$0.00
22713	External Relations Expense	D22713*E22708		0.037846	$0.10
22714	Legal Expense	D22714*E22708		0.004717	$0.01
22715	Other Procurement Expense	D22715*E22708		0.001860	$0.00
22716	Research & Development Expense	D22716*E22708		0.000006	$0.00
22717	Other General and Admin Expense	D22717*E22708		0.015064	$0.04
22718	***Common Costs***	Sum(E22711:E22717)			$0.19
22719					
22720	***TELRIC + Common Costs***	E22708+E22718			$2.82

NONRECURRING COST DETAIL SUMMARY

Study Name: NONRECURRING ELEMENTS
Study Year: 2002
Analyst: Deffley/Eoriatti
Product Group: Interconnection

State: South Dakota

Work Item	Time Minutes	Prob #1	Prob #2	Prob #3	Prob #4	Applied Time (Minutes)	Labor /Hour	Cost
A	B	C	D	E	F	G	H	I
						B * (C Thru F)		H * (G/60)
UNE-P POTS FIRST LINE MECHANIZED NEW SERVICE								
ADD								
-INTERCONNECT SERVICE CENTER								
Prob 1 (.05) is percent orders that fall out.								
Screen and route to order writer.	5	0.050				0.25	$39.16	$0.16
Type change of Service Provider - 1st line	10	0.050				0.50	$39.16	$0.33
Subtotal - INTERCONNECT SERVICE CENTER						**0.75**		**$0.49**
-LOOP PROVISIONING CENTER								
PROB #1 = % OF ORDERS MANUALLY ASSIGNED,INCLUDES ALL ORDERS NOT ASSIGNED IN FACS								
AVG CLEARING TIME PER RMA	11.25	0.150				1.69	$37.78	$1.06
Subtotal - LOOP PROVISIONING CENTER						**1.69**		**$1.06**
-CENTRAL OFFICE								
PROB #1 = % OF LINES REQUIRING JUMPER WORK THIS IS THE % OF NON-DIP (DEDICATED INSIDE PLANT) ON INWARD ORDERS								
CO PLACE JUMPER(S)	4	0.450				1.80	$43.81	$1.31
Subtotal - CENTRAL OFFICE						**1.80**		**$1.31**
-DISPATCH								
PROB #1 = % OF ORDERS REQUIRING DISPATCH								
PROB #2 = % RES & BUS ORDERS TO TOTAL ORDERS								
DISPATCH SERV ORD FOR LINE WRK - RES	5	0.320	0.100			0.16	$37.78	$0.10
DISPATCH CLOSEOUT SERV ORD LN - RES	2	0.320	0.100			0.06	$37.78	$0.04
DISPATCH COMPLETION TYPE ORD - RES	2.5	0.320	0.100			0.08	$37.78	$0.05
DISPATCH SERV ORD FOR LINE WRK - BUS	5	0.710	0.900			3.20	$37.78	$2.01
DISPATCH CLOSEOUT SERV ORD LN - BUS	2	0.710	0.900			1.28	$37.78	$0.80
DISPATCH COMPLETION TYPE ORD - BUS	2.5	0.710	0.900			1.60	$37.78	$1.01
Subtotal - DISPATCH						**6.37**		**$4.01**
-INSTALLATION & MAINT.								
PROB #1 = % OF ORDERS REQUIRING DISPATCH								
PROB #2 = % RES & BUS ORDERS TO TOTAL ORDERS								
I&M INST TRAVEL TIME RES	23	0.320	0.100			0.74	$42.68	$0.52
I&M INST CUST CONTACT RES	16	0.320	0.100			0.51	$42.68	$0.36
I&M INST TRAVEL TIME BUS	21	0.710	0.900			13.42	$42.68	$9.55
I&M INST CUST CONTACT BUS	21	0.710	0.900			13.42	$42.68	$9.55

Study Name: NONRECURRING ELEMENTS
Study Year: 2002
Analyst: Deffley/Eoriatti
Product Group: Interconnection

State: South Dakota

Work Item	Time Minutes	Prob #1	Prob #2	Prob #3	Prob #4	Applied Time (Minutes)	Labor /Hour	Cost
A	B	C	D	E	F	G B * (C Thru F)	H	I H * (G/60)
UNE-P POTS FIRST LINE MECHANIZED NEW SERVICE (con't)								
PROB #1 = % OF TIME XCONNECT AT ACCESS POINT IS REQUIRED								
PROB #2 = % RES & BUS ORDERS TO TOTAL ORDERS								
I&M INST 1ST X-CONNECT - RES	13	0.280	0.100			0.36	$42.68	$0.26
I&M INST 1ST X-CONNECT - BUS	13	0.250	0.900			2.93	$42.68	$2.08
PROB #1 = % OF ORDERS REQUIRING DISPATCH								
PROB #2 = % OF TIME LINE CONNECTION IS NOT CAPITALIZED								
PROB #3 = % RES & BUS ORDERS TO TOTAL ORDERS								
I&M INST RECONNECT 1ST LINE - RES	24	0.320	0.500	0.100		0.38	$42.68	$0.27
I&M INST RECONNECT 1ST LINE - BUS	24	0.710	0.500	0.900		7.67	$42.68	$5.45
I&M INST CLS ORD LN FLD CONNCT RES	13	0.320	0.500	0.100		0.21	$42.68	$0.15
I&M INST CLS ORD LN FLD CONNCT BUS	14	0.710	0.500	0.900		4.47	$42.68	$3.18
Subtotal - INSTALLATION & MAINT.						**44.11**		**$31.38**
DISCONNECT								
-INTERCONNECT SERVICE CENTER								
Prob 1 (.05) is percent orders that fall out.								
Screen and route to order writer.	5	0.050				0.25	$39.16	$0.16
Type Disconnect	5	0.050				0.25	$39.16	$0.16
Subtotal - INTERCONNECT SERVICE CENTER						**0.50**		**$0.33**
-LOOP PROVISIONING CENTER								
PROB #1 = % OF ORDERS MANUALLY ASSIGNED, INCLUDES ALL ORDERS								
NOT ASSIGNED IN FACS								
AVG CLEARING TIME PER RMA	11.25	0.150				1.69	$37.78	$1.06
Subtotal - LOOP PROVISIONING CENTER						**1.69**		**$1.06**
-CENTRAL OFFICE								
PROB #1 = % OF LINES REQUIRING JUMPER WORK,THIS IS THE % OF								
NON-DIP (DEDICATED INSIDE PLANT) ON OUTWARD ORDERS								
CO REMOVE JUMPER(S)	2.3	0.260				0.60	$43.81	$0.44
Subtotal - CENTRAL OFFICE						**0.60**		**$0.44**
Total For Service:						**57.51**		**$40.08**

	Work Item	Time Minutes	Prob #1	Prob #2	Prob #3	Prob #4	Applied Time (Minutes)	Labor /Hour	Cost
	A	B	C	D	E	F	G	H	I
							B * (C Thru F)		H * (G/60)

UNE-P POTS FIRST LINE MECHANIZED NEW SERVICE (con't)

22817	**Direct Cost**					$40.08
22818						
22819		Cost Calculation			Cost Factor	Cost
22820		B		C	D	E
22821						
22822	***Marketing & Business Fees***					
22823	Product Management Expense	D22823*E22817			0.019957	$0.80
22824	Sales Expense	D22824*E22817			0.011877	$0.48
22825	Product Advertising Expense	D22825*E22817			0.000000	$0.00
22826	Business Fees (Other Operating Taxes)	D22826*Sum(E22817:E22825)			0.001483	$0.06
22827	***Total Marketing & Business Fees***	Sum(E22817:E22826)				$1.34
22828						
22829	***Sub-Total Direct Cost & Marketing***	E22817+E22827				$41.42
22830						
22831	***Other Direct Expenses***					
22832	Network Operations	D22832*E22829			0.034832	$1.44
22833	Network Support Assets	D22833*E22829			0.014703	$0.61
22834	General Support Assets	D22834*E22829			0.088742	$3.68
22835	General Purpose Computers	D22835*E22829			0.043342	$1.80
22836	Uncollectible	D22836*E22829			0.003786	$0.16
22837	Accounting & Finance Expense	D22837*E22829			0.007346	$0.30
22838	Human Resources Expense	D22838*E22829			0.008294	$0.34
22839	Information Management Expense	D22839*E22829			0.070887	$2.94
22840	Intangibles	D22840*E22829			0.000000	$0.00
22841	***Total Other Direct Expenses***	Sum(E22832:E22840)				$11.26
22842						
22843	***TELRIC***	E22832+E22841				$52.68
22844						
22845	***Common***					
22846	Executive Expense	D22846*E22843			0.011267	$0.59
22847	Planning Expense	D22847*E22843			0.000525	$0.03
22848	External Relations Expense	D22848*E22843			0.037846	$1.99
22849	Legal Expense	D22849*E22843			0.004717	$0.25
22850	Other Procurement Expense	D22850*E22843			0.001860	$0.10
22851	Research & Development Expense	D22851*E22843			0.000006	$0.00
22852	Other General and Admin Expense	D22852*E22843			0.015064	$0.79
22853	***Common Costs***	Sum(E22846:E22852)				$3.76
22854						
22855	***TELRIC + Common Costs***	E22843+E22853				$56.44

NONRECURRING COST DETAIL SUMMARY

Study Name: NONRECURRING ELEMENTS
Study Year: 2002
Analyst: Deffley/Eoriatti
Product Group: Interconnection

ENRC Version: 2.16
Date: 06/03/02

State: South Dakota

Work Item	Time Minutes	Prob #1	Prob #2	Prob #3	Prob #4	Applied Time (Minutes)	Labor /Hour	Cost
A	B	C	D	E	F	G B * (C Thru F)	H	I H * (G/60)
UNE-P POTS EA ADDL LINE MECHANIZED NEW SERVICE								
ADD								
-INTERCONNECT SERVICE CENTER								
Prob 1 (.05) is percent orders that fall out.								
Type change of Service Provider - additional line	3	0.050				0.15	$39.16	$0.10
Subtotal - INTERCONNECT SERVICE CENTER						**0.15**		**$0.10**
-LOOP PROVISIONING CENTER								
PROB #1 = % OF ORDERS MANUALLY ASSIGNED,INCLUDES ALL ORDERS NOT ASSIGNED IN FACS								
AVG CLEARING TIME PER RMA	11.25	0.150				1.69	$37.78	$1.06
Subtotal - LOOP PROVISIONING CENTER						**1.69**		**$1.06**
-CENTRAL OFFICE								
PROB #1 = % OF LINES REQUIRING JUMPER WORK THIS IS THE % OF NON-DIP (DEDICATED INSIDE PLANT) ON INWARD ORDERS								
CO PLACE JUMPER(S)	4	0.450				1.80	$43.81	$1.31
Subtotal - CENTRAL OFFICE						**1.80**		**$1.31**
-INSTALLATION & MAINT.								
PROB #1 = % OF TIME XCONNECT AT ACCESS POINT IS REQUIRED								
PROB #2 = % RES & BUS ORDERS TO TOTAL ORDERS								
I&M INST 1ST X-CONNECT - RES	10	0.280	0.100			0.28	$42.68	$0.20
I&M INST 1ST X-CONNECT - BUS	10	0.250	0.900			2.25	$42.68	$1.60
PROB #1 = % OF ORDERS REQUIRING DISPATCH								
PROB #2 = % OF TIME LINE CONNECTION IS NOT CAPITALIZED								
PROB #3 = % RES & BUS ORDERS TO TOTAL ORDERS								
I&M INST RECONNECT 1ST LINE - RES	24	0.320	0.500	0.100		0.38	$42.68	$0.27
I&M INST RECONNECT 1ST LINE - BUS	24	0.710	0.500	0.900		7.67	$42.68	$5.45
Subtotal - INSTALLATION & MAINT.						**10.58**		**$7.53**
DISCONNECT								
-LOOP PROVISIONING CENTER								
PROB #1 = % OF ORDERS MANUALLY ASSIGNED, INCLUDES ALL ORDERS NOT ASSIGNED IN FACS								
AVG CLEARING TIME PER RMA	11.25	0.150				1.69	$37.78	$1.06

NONRECURRING COST DETAIL SUMMARY

Study Name: NONRECURRING ELEMENTS
Study Year: 2002
Analyst: Deffley/Eoriatti
Product Group: Interconnection

State: South Dakota

Work Item	Time Minutes	Prob #1	Prob #2	Prob #3	Prob #4	Applied Time (Minutes)	Labor /Hour	Cost
A	B	C	D	E	F	G	H	I
						B * (C Thru F)		H * (G/60)
UNE-P POTS EA ADDL LINE MECHANIZED NEW SERVICE (con't)								
Subtotal - LOOP PROVISIONING CENTER						**1.69**		**$1.06**
-CENTRAL OFFICE								
PROB #1 = % OF LINES REQUIRING JUMPER WORK,THIS IS THE % OF NON-DIP (DEDICATED INSIDE PLANT) ON OUTWARD ORDERS								
CO REMOVE JUMPER(S)	2.3	0.260				0.60	$43.81	$0.44
Subtotal - CENTRAL OFFICE						**0.60**		**$0.44**
Total For Service:						**16.51**		**$11.50**

NONRECURRING COST DETAIL SUMMARY

Study Name: NONRECURRING ELEMENTS
Study Year: 2002
Analyst: Deffley/Eoriatti
Product Group: Interconnection

State: South Dakota

	Work Item	Time Minutes	Prob #1	Prob #2	Prob #3	Prob #4	Applied Time (Minutes)	Labor /Hour	Cost
	A	B	C	D	E	F	G	H	I
							B * (C Thru F)		H * (G/60)

UNE-P POTS EA ADDL LINE MECHANIZED NEW SERVICE (con't)

22952	**Direct Cost**				$11.50
22953					
22954		**Cost Calculation**		**Cost Factor**	**Cost**
22955					
22956		B	C	D	E
22957	***Marketing & Business Fees***				
22958	Product Management Expense	D22958*E22952		0.019957	$0.23
22959	Sales Expense	D22959*E22952		0.011877	$0.14
22960	Product Advertising Expense	D22960*E22952		0.000000	$0.00
22961	Business Fees (Other Operating Taxes)	D22961*Sum(E22952:E22960)		0.001483	$0.02
22962	***Total Marketing & Business Fees***	Sum(E22952:E22961)			$0.38
22963					
22964	***Sub-Total Direct Cost & Marketing***	E22952+E22962			$11.89
22965					
22966	***Other Direct Expenses***				
22967	Network Operations	D22967*E22964		0.034832	$0.41
22968	Network Support Assets	D22968*E22964		0.014703	$0.17
22969	General Support Assets	D22969*E22964		0.088742	$1.05
22970	General Purpose Computers	D22970*E22964		0.043342	$0.52
22971	Uncollectible	D22971*E22964		0.003786	$0.04
22972	Accounting & Finance Expense	D22972*E22964		0.007346	$0.09
22973	Human Resources Expense	D22973*E22964		0.008294	$0.10
22974	Information Management Expense	D22974*E22964		0.070887	$0.84
22975	Intangibles	D22975*E22964		0.000000	$0.00
22976	***Total Other Direct Expenses***	Sum(E22967:E22975)			$3.23
22977					
22978	***TELRIC***	E22967+E22976			$15.12
22979					
22980	***Common***				
22981	Executive Expense	D22981*E22978		0.011267	$0.17
22982	Planning Expense	D22982*E22978		0.000525	$0.01
22983	External Relations Expense	D22983*E22978		0.037846	$0.57
22984	Legal Expense	D22984*E22978		0.004717	$0.07
22985	Other Procurement Expense	D22985*E22978		0.001860	$0.03
22986	Research & Development Expense	D22986*E22978		0.000006	$0.00
22987	Other General and Admin Expense	D22987*E22978		0.015064	$0.23
22988	***Common Costs***	Sum(E22981:E22987)			$1.08
22989					
22990	***TELRIC + Common Costs***	E22978+E22988			$16.19

NONRECURRING COST DETAIL SUMMARY

Study Name: NONRECURRING ELEMENTS
Study Year: 2002
Analyst: Deffley/Eoriatti
Product Group: Interconnection

ENRC Version: 2.16
Date: 06/03/02

State: South Dakota

Work Item	Time Minutes	Prob #1	Prob #2	Prob #3	Prob #4	Applied Time (Minutes)	Labor /Hour	Cost
A	B	C	D	E	F	G	H	I
						B * (C Thru F)		H * (G/60)
UNE-P POTS FIRST LINE MANUAL NEW SERVICE								
ADD								
-INTERCONNECT SERVICE CENTER								
Receive request and send CSR (Customer Service Record)	3	1.000				3.00	$39.16	$1.96
Receive and screen LSR (Loop Service Request)	5	1.000				5.00	$39.16	$3.26
Type change of Service Provider - 1st line	10	1.000				10.00	$39.16	$6.53
Subtotal - INTERCONNECT SERVICE CENTER						**18.00**		**$11.75**
-LOOP PROVISIONING CENTER								
PROB #1 = % OF ORDERS MANUALLY ASSIGNED,INCLUDES ALL ORDERS NOT ASSIGNED IN FACS								
AVG CLEARING TIME PER RMA	11.25	0.150				1.69	$37.78	$1.06
Subtotal - LOOP PROVISIONING CENTER						**1.69**		**$1.06**
-CENTRAL OFFICE								
PROB #1 = % OF LINES REQUIRING JUMPER WORK THIS IS THE % OF NON-DIP (DEDICATED INSIDE PLANT) ON INWARD ORDERS								
CO PLACE JUMPER(S)	4	0.450				1.80	$43.81	$1.31
Subtotal - CENTRAL OFFICE						**1.80**		**$1.31**
-DISPATCH								
PROB #1 = % OF ORDERS REQUIRING DISPATCH								
PROB #2 = % RES & BUS ORDERS TO TOTAL ORDERS								
DISPATCH SERV ORD FOR LINE WRK - RES	5	0.320	0.100			0.16	$37.78	$0.10
DISPATCH CLOSEOUT SERV ORD LN - RES	2	0.320	0.100			0.06	$37.78	$0.04
DISPATCH COMPLETION TYPE ORD - RES	2.5	0.320	0.100			0.08	$37.78	$0.05
DISPATCH SERV ORD FOR LINE WRK - BUS	5	0.710	0.900			3.20	$37.78	$2.01
DISPATCH CLOSEOUT SERV ORD LN - BUS	2	0.710	0.900			1.28	$37.78	$0.80
DISPATCH COMPLETION TYPE ORD - BUS	2.5	0.710	0.900			1.60	$37.78	$1.01
Subtotal - DISPATCH						**6.37**		**$4.01**
-INSTALLATION & MAINT.								
PROB #1 = % OF ORDERS REQUIRING DISPATCH								
PROB #2 = % RES & BUS ORDERS TO TOTAL ORDERS								
I&M INST TRAVEL TIME RES	23	0.320	0.100			0.74	$42.68	$0.52
I&M INST CUST CONTACT RES	16	0.320	0.100			0.51	$42.68	$0.36
I&M INST TRAVEL TIME BUS	21	0.710	0.900			13.42	$42.68	$9.55
I&M INST CUST CONTACT BUS	21	0.710	0.900			13.42	$42.68	$9.55

Work Item	Time Minutes	Prob #1	Prob #2	Prob #3	Prob #4	Applied Time (Minutes)	Labor /Hour	Cost
A	B	C	D	E	F	G B * (C Thru F)	H	I H * (G/60)
UNE-P POTS FIRST LINE MANUAL NEW SERVICE (con't)								
PROB #1 = % OF TIME XCONNECT AT ACCESS POINT IS REQUIRED								
PROB #2 = % RES & BUS ORDERS TO TOTAL ORDERS								
I&M INST 1ST X-CONNECT - RES	13	0.280	0.100			0.36	$42.68	$0.26
I&M INST 1ST X-CONNECT - BUS	13	0.250	0.900			2.93	$42.68	$2.08
PROB #1 = % OF ORDERS REQUIRING DISPATCH								
PROB #2 = % OF TIME LINE CONNECTION IS NOT CAPITALIZED								
PROB #3 = % RES & BUS ORDERS TO TOTAL ORDERS								
I&M INST RECONNECT 1ST LINE - RES	24	0.320	0.500	0.100		0.38	$42.68	$0.27
I&M INST RECONNECT 1ST LINE - BUS	24	0.710	0.500	0.900		7.67	$42.68	$5.45
I&M INST CLS ORD LN FLD CONNCT RES	13	0.320	0.500	0.100		0.21	$42.68	$0.15
I&M INST CLS ORD LN FLD CONNCT BUS	14	0.710	0.500	0.900		4.47	$42.68	$3.18
Subtotal - INSTALLATION & MAINT.						**44.11**		**$31.38**
DISCONNECT								
-INTERCONNECT SERVICE CENTER								
PROCESS FOR DISCONNECT INCLUDES ALL LINES ON THE ORDER.								
NO INCREMENTAL TIME FOR EACH ADDITIONAL LINE ON AN ORDER.								
Receive request and send CSR (Customer Service Record)	3	1.000				3.00	$39.16	$1.96
Receive and screen LSR (Loop Service Request)	5	1.000				5.00	$39.16	$3.26
Type change of Service Provider - 1st line	5	1.000				5.00	$39.16	$3.26
Subtotal - INTERCONNECT SERVICE CENTER						**13.00**		**$8.48**
-LOOP PROVISIONING CENTER								
PROB #1 = % OF ORDERS MANUALLY ASSIGNED, INCLUDES ALL ORDERS								
NOT ASSIGNED IN FACS								
AVG CLEARING TIME PER RMA	11.25	0.150				1.69	$37.78	$1.06
Subtotal - LOOP PROVISIONING CENTER						**1.69**		**$1.06**
-CENTRAL OFFICE								
PROB #1 = % OF LINES REQUIRING JUMPER WORK,THIS IS THE % OF								
NON-DIP (DEDICATED INSIDE PLANT) ON OUTWARD ORDERS								
CO REMOVE JUMPER(S)	2.3	0.260				0.60	$43.81	$0.44
Subtotal - CENTRAL OFFICE						**0.60**		**$0.44**
Total For Service:						**87.26**		**$59.50**

NONRECURRING COST DETAIL SUMMARY

Study Name: NONRECURRING ELEMENTS
Study Year: 2002
Analyst: Deffley/Eoriatti
Product Group: Interconnection

State: South Dakota

	Work Item	Time Minutes	Prob #1	Prob #2	Prob #3	Prob #4	Applied Time (Minutes)	Labor /Hour	Cost
	A	B	C	D	E	F	G	H	I
							B * (C Thru F)		H * (G/60)

UNE-P POTS FIRST LINE MANUAL NEW SERVICE (con't)

		Cost Calculation		Cost Factor	Cost
		B	C	D	E
23087	**Direct Cost**				$59.50
23088					
23089					
23090					
23091					
23092	***Marketing & Business Fees***				
23093	Product Management Expense	D23093*E23087		0.019957	$1.19
23094	Sales Expense	D23094*E23087		0.011877	$0.71
23095	Product Advertising Expense	D23095*E23087		0.000000	$0.00
23096	Business Fees (Other Operating Taxes)	D23096*Sum(E23087:E23095)		0.001483	$0.09
23097	***Total Marketing & Business Fees***	Sum(E23087:E23096)			$1.99
23098					
23099	***Sub-Total Direct Cost & Marketing***	E23087+E23097			$61.48
23100					
23101	***Other Direct Expenses***				
23102	Network Operations	D23102*E23099		0.034832	$2.14
23103	Network Support Assets	D23103*E23099		0.014703	$0.90
23104	General Support Assets	D23104*E23099		0.088742	$5.46
23105	General Purpose Computers	D23105*E23099		0.043342	$2.66
23106	Uncollectible	D23106*E23099		0.003786	$0.23
23107	Accounting & Finance Expense	D23107*E23099		0.007346	$0.45
23108	Human Resources Expense	D23108*E23099		0.008294	$0.51
23109	Information Management Expense	D23109*E23099		0.070887	$4.36
23110	Intangibles	D23110*E23099		0.000000	$0.00
23111	***Total Other Direct Expenses***	Sum(E23102:E23110)			$16.72
23112					
23113	***TELRIC***	E23102+E23111			$78.20
23114					
23115	***Common***				
23116	Executive Expense	D23116*E23113		0.011267	$0.88
23117	Planning Expense	D23117*E23113		0.000525	$0.04
23118	External Relations Expense	D23118*E23113		0.037846	$2.96
23119	Legal Expense	D23119*E23113		0.004717	$0.37
23120	Other Procurement Expense	D23120*E23113		0.001860	$0.15
23121	Research & Development Expense	D23121*E23113		0.000006	$0.00
23122	Other General and Admin Expense	D23122*E23113		0.015064	$1.18
23123	***Common Costs***	Sum(E23116:E23122)			$5.57
23124					
23125	***TELRIC + Common Costs***	E23113+E23123			$83.78

NONRECURRING COST DETAIL SUMMARY

Study Name: NONRECURRING ELEMENTS
Study Year: 2002
Analyst: Deffley/Eoriatti
Product Group: Interconnection

State: South Dakota

Work Item	Time Minutes	Prob #1	Prob #2	Prob #3	Prob #4	Applied Time (Minutes)	Labor /Hour	Cost
A	B	C	D	E	F	G	H	I
						B * (C Thru F)		H * (G/60)
UNE-P POTS EA ADDL LINE MANUAL NEW SERVICE								
ADD								
-INTERCONNECT SERVICE CENTER								
Type change of Service Provider - additional line	3	1.000				3.00	$39.16	$1.96
Subtotal - INTERCONNECT SERVICE CENTER						**3.00**		**$1.96**
-LOOP PROVISIONING CENTER								
PROB #1 = % OF ORDERS MANUALLY ASSIGNED,INCLUDES ALL ORDERS NOT ASSIGNED IN FACS								
AVG CLEARING TIME PER RMA	11.25	0.150				1.69	$37.78	$1.06
Subtotal - LOOP PROVISIONING CENTER						**1.69**		**$1.06**
-CENTRAL OFFICE								
PROB #1 = % OF LINES REQUIRING JUMPER WORK THIS IS THE % OF NON-DIP (DEDICATED INSIDE PLANT) ON INWARD ORDERS								
CO PLACE JUMPER(S)	4	0.450				1.80	$43.81	$1.31
Subtotal - CENTRAL OFFICE						**1.80**		**$1.31**
-INSTALLATION & MAINT.								
PROB #1 = % OF TIME XCONNECT AT ACCESS POINT IS REQUIRED								
PROB #2 = % RES & BUS ORDERS TO TOTAL ORDERS								
I&M INST 1ST X-CONNECT - RES	10	0.280	0.100			0.28	$42.68	$0.20
I&M INST 1ST X-CONNECT - BUS	10	0.250	0.900			2.25	$42.68	$1.60
PROB #1 = % OF ORDERS REQUIRING DISPATCH								
PROB #2 = % OF TIME LINE CONNECTION IS NOT CAPITALIZED								
PROB #3 = % RES & BUS ORDERS TO TOTAL ORDERS								
I&M INST RECONNECT 1ST LINE - RES	24	0.320	0.500	0.100		0.38	$42.68	$0.27
I&M INST RECONNECT 1ST LINE - BUS	24	0.710	0.500	0.900		7.67	$42.68	$5.45
Subtotal - INSTALLATION & MAINT.						**10.58**		**$7.53**
DISCONNECT								
-LOOP PROVISIONING CENTER								
PROB #1 = % OF ORDERS MANUALLY ASSIGNED, INCLUDES ALL ORDERS NOT ASSIGNED IN FACS								
AVG CLEARING TIME PER RMA	11.25	0.150				1.69	$37.78	$1.06
Subtotal - LOOP PROVISIONING CENTER						**1.69**		**$1.06**

NONRECURRING COST DETAIL SUMMARY

Study Name: NONRECURRING ELEMENTS
Study Year: 2002
Analyst: Deffley/Eoriatti
Product Group: Interconnection

ENRC Version: 2.16
Date: 06/03/02

State: South Dakota

Work Item	Time Minutes	Prob #1	Prob #2	Prob #3	Prob #4	Applied Time (Minutes)	Labor /Hour	Cost
A	B	C	D	E	F	G	H	I
						B * (C Thru F)		H * (G/60)
UNE-P POTS EA ADDL LINE MANUAL NEW SERVICE (con't)								
-CENTRAL OFFICE								
PROB #1 = % OF LINES REQUIRING JUMPER WORK,THIS IS THE % OF NON-DIP (DEDICATED INSIDE PLANT) ON OUTWARD ORDERS								
CO REMOVE JUMPER(S)	2.3	0.260				0.60	$43.81	$0.44
Subtotal - CENTRAL OFFICE						**0.60**		**$0.44**
Total For Service:						**19.36**		**$13.36**

	Work Item	Time Minutes	Prob #1	Prob #2	Prob #3	Prob #4	Applied Time (Minutes)	Labor /Hour	Cost
	A	B	C	D	E	F	G	H	I
							B * (C Thru F)		H * (G/60)

UNE-P POTS EA ADDL LINE MANUAL NEW SERVICE (con't)

23222	**Direct Cost**					$13.36
23223						
23224		Cost Calculation		Cost Factor	Cost	
23225		B	C	D	E	
23226						
23227	***Marketing & Business Fees***					
23228	Product Management Expense	D23228*E23222		0.019957	$0.27	
23229	Sales Expense	D23229*E23222		0.011877	$0.16	
23230	Product Advertising Expense	D23230*E23222		0.000000	$0.00	
23231	Business Fees (Other Operating Taxes)	D23231*Sum(E23222:E23230)		0.001483	$0.02	
23232	***Total Marketing & Business Fees***	Sum(E23222:E23231)			$0.45	
23233						
23234	***Sub-Total Direct Cost & Marketing***	E23222+E23232			$13.81	
23235						
23236	***Other Direct Expenses***					
23237	Network Operations	D23237*E23234		0.034832	$0.48	
23238	Network Support Assets	D23238*E23234		0.014703	$0.20	
23239	General Support Assets	D23239*E23234		0.088742	$1.23	
23240	General Purpose Computers	D23240*E23234		0.043342	$0.60	
23241	Uncollectible	D23241*E23234		0.003786	$0.05	
23242	Accounting & Finance Expense	D23242*E23234		0.007346	$0.10	
23243	Human Resources Expense	D23243*E23234		0.008294	$0.11	
23244	Information Management Expense	D23244*E23234		0.070887	$0.98	
23245	Intangibles	D23245*E23234		0.000000	$0.00	
23246	***Total Other Direct Expenses***	Sum(E23237:E23245)			$3.75	
23247						
23248	***TELRIC***	E23237+E23246			$17.56	
23249						
23250	***Common***					
23251	Executive Expense	D23251*E23248		0.011267	$0.20	
23252	Planning Expense	D23252*E23248		0.000525	$0.01	
23253	External Relations Expense	D23253*E23248		0.037846	$0.66	
23254	Legal Expense	D23254*E23248		0.004717	$0.08	
23255	Other Procurement Expense	D23255*E23248		0.001860	$0.03	
23256	Research & Development Expense	D23256*E23248		0.000006	$0.00	
23257	Other General and Admin Expense	D23257*E23248		0.015064	$0.26	
23258	***Common Costs***	Sum(E23251:E23257)			$1.25	
23259						
23260	***TELRIC + Common Costs***	E23248+E23258			$18.81	

Work Item	Time Minutes	Prob #1	Prob #2	Prob #3	Prob #4	Applied Time (Minutes)	Labor /Hour	Cost
A	B	C	D	E	F	G	H	I
						B * (C Thru F)		H * (G/60)
NEW UNE- P PBX DID - PER TRUNK								
ADD								
-INTERCONNECT SERVICE CENTER								
Column 1 = times								
PROB #1 = average number per trunk order. .042 based on avg of 24 members per group (1/24)								
SOA (Service Order Administrator) receives firm LSR (Local Service Request) via fax, screens for fatal rejects and log LSR								
Receive & screen LSR	5	0.042				0.21	$39.16	$0.14
SDC (Service Delivery Coordinator) verifies address, and trunk info from LSR and manually enters the service order into the SOP (Service Order Processor)								
Type order into SOP	10	0.042				0.42	$39.16	$0.27
SDC faxes FOC (Firm Order Confirmation) to the co-provider and logs for tracking								
Fax FOC	2	0.042				0.08	$39.16	$0.05
SDC accesses the order in the SOP and completes it								
Completes order in SOP	5	0.042				0.21	$39.16	$0.14
Subtotal - INTERCONNECT SERVICE CENTER						**0.92**		**$0.60**
-DESIGN SERVICE CENTER - DESIGN								
PROB #1 = average number per trunk order .042 based on average of 24 members per group (1/24)								
.05, .95, .20, .80 = % of manual probability								
Order handling/screening	10	0.042	1.000			0.42	$44.31	$0.31
Validate DRI (Design Related Information) & WA (Work Authorization)	10	0.042	0.050			0.02	$44.31	$0.02
Validate DRI (Design Related Information) & WA (Work Authorization)	4	0.042	0.950			0.16	$44.31	$0.12
Build/Verify CD (Circuit Detail)	15	0.042	0.200			0.13	$44.31	$0.09
Build/Verify CD (Circuit Detail)	3	0.042	0.800			0.10	$44.31	$0.07
Distribute Documents	2	0.042	1.000			0.08	$44.31	$0.06
TAS	15	0.042	1.000			0.63	$44.31	$0.47
Subtotal - DESIGN SERVICE CENTER - DESIGN						**1.54**		**$1.14**
-DESIGN SERVICE CENTER - IMPLEMENTOR								
PROB #1 = % of orders manually handled by the Implementor Center								
PROB #2 = .042 based on average of 24 members per group (1/24)								
Screen WFA (Work Force Administration for circuit	10	1.000	0.042			0.42	$43.81	$0.31
Verify LNO (Local Network Organization) (CO) completoin	10	1.000	0.042			0.42	$43.81	$0.31
Test Circuit	15	1.000	0.042			0.63	$43.81	$0.46

NONRECURRING COST DETAIL SUMMARY

Study Name: NONRECURRING ELEMENTS
Study Year: 2002
Analyst: Deffley/Eoriatti
Product Group: Interconnection

ENRC Version: 2.16
Date: 06/03/02

State: South Dakota

Work Item	Time Minutes	Prob #1	Prob #2	Prob #3	Prob #4	Applied Time (Minutes)	Labor /Hour	Cost
A	B	C	D	E	F	G B * (C Thru F)	H	I H * (G/60)
NEW UNE- P PBX DID - PER TRUNK (con't)								
NOTIFY CUSTOMER	5	1.000	0.042			0.21	$43.81	$0.15
Complete Circuit in WFA Control	10	1.000	0.042			0.42	$43.81	$0.31
Subtotal - DESIGN SERVICE CENTER - IMPLEMENTOR						**2.10**		**$1.53**
-COMPLEX TRANSLATIONS DMS ESTABLISH TRUNK GROUPS								
PROB #1 = .042 based on average of 24 members per trunk group (1/24)								
PROB #2 = % BY SWITCH TYPE								
ADMIN TRUNK GROUP DMS	65	0.042	0.340			0.93	$41.45	$0.64
MAINT TRUNK GROUP DMS	40	0.042	0.340			0.57	$41.45	$0.39
Subtotal - COMPLEX TRANSLATIONS DMS ESTABLISH TRUNK GROUPS						**1.50**		**$1.04**
- COMPLEX TRANSLATIONS DMS PER TRUNK								
PROB#1 = % OF TIME THIS PRODUCT REQUIRES COMPLEX TRANSLATION WORK								
PROB #2 = % BY SWITCH TYPE								
ADMIN PER TRUNK DMS	5	1.000	0.340			1.70	$41.45	$1.17
MAINT PER TRUNK DMS	115	1.000	0.340			39.10	$41.45	$27.01
Subtotal - COMPLEX TRANSLATIONS DMS PER TRUNK						**40.80**		**$28.19**
- COMPLEX TRANSLATIONS 5E ESTABLISH TRUNK GROUPS								
PROB #1 = .042 based on average of 24 members per trunk group (1/24)								
PROB #2 = % BY SWITCH TYPE								
ADMIN TRUNK GROUP 5E	35	0.042	0.660			0.97	$41.45	$0.67
MAINT TRUNK GROUP 5E	50	0.042	0.660			1.39	$41.45	$0.96
Subtotal - COMPLEX TRANSLATIONS 5E ESTABLISH TRUNK GROUPS						**2.36**		**$1.63**
- COMPLEX TRANSLATIONS 5E PER TRUNK								
PROB #1 = % OF TIME THIS PRODUCT REQUIRES COMPLEX TRANSLATION WORK								
PROB #2 = % BY SWITCH TYPE								
ADMIN PER TRUNK 5E	5	1.000	0.660			3.30	$41.45	$2.28
MAINT PER TRUNK 5E	150	1.000	0.660			99.00	$41.45	$68.39
Subtotal - COMPLEX TRANSLATIONS 5E PER TRUNK						**102.30**		**$70.67**
- COMPLEX TRANSLATIONS 5E PER CUSTOMER								
PROB #1 = AVG NUMBER OF TRUNK GROUPS PER CUSTOMER								
PROB #2 = % BY SWITCH TYPE								
ADMIN PER CUSTOMER 5E	5	0.100	0.660			0.33	$41.45	$0.23
MAINT PER CUSTOMER 5E	10	0.100	0.660			0.66	$41.45	$0.46

NONRECURRING COST DETAIL SUMMARY

Study Name: NONRECURRING ELEMENTS
Study Year: 2002
Analyst: Deffley/Eoriatti
Product Group: Interconnection

State: South Dakota

Work Item	Time Minutes	Prob #1	Prob #2	Prob #3	Prob #4	Applied Time (Minutes)	Labor /Hour	Cost
A	B	C	D	E	F	G	H	I
						B * (C Thru F)		H * (G/60)
NEW UNE- P PBX DID - PER TRUNK (con't)								
Subtotal - COMPLEX TRANSLATIONS 5E PER CUSTOMER						**0.99**		**$0.68**
DISCONNECT								
-INTERCONNECT SERVICE CENTER								
Column 1 = times								
PROB #1 = average number per trunk order. .042 based on avg of 24 members per group (1/24)								
Pre order, Outsourcer receives request for CSR from reseller, accesses CSR								
via BOSS/CARS database, gathers records & faxes to reseller (SCRM)								
Receive request & Screen LSR	3	0.042				0.13	$39.16	$0.08
Order Screener rreceives frim LSR (via fax) screens for fatal rejects								
faxes LSR to appropriate center for logging and typing								
Receive & Screen LSR	5	0.042				0.21	$39.16	$0.14
Order Writer using LSR manually enters order in SOP and sends a								
FOC to the reseller. Logs minimal data in CRM								
Type change of Service provider	5	0.042				0.21	$39.16	$0.14
Subtotal - INTERCONNECT SERVICE CENTER						**0.55**		**$0.36**
-DESIGN SERVICE CENTER - DESIGN								
PROB #1 = average number per trunk order								
.042 based on average of 24 members								
per group (1/24)								
.05, .95 = % of manual probability								
Order handling/screening	10	0.042	1.000			0.42	$44.31	$0.31
PCList Trunks	2	0.042	1.000			0.08	$44.31	$0.06
Build/validate Work Authorization	5	0.042	0.050			0.01	$44.31	$0.01
Build/validate Work Authorization	2	0.042	0.950			0.08	$44.31	$0.06
Build/Verify CD (Circuit Detail)	10	0.042	0.050			0.02	$44.31	$0.02
Build/Verify CD (Circuit Detail)	2	0.042	0.950			0.08	$44.31	$0.06
Distribute Documents	2	0.042	1.000			0.08	$44.31	$0.06
Subtotal - DESIGN SERVICE CENTER - DESIGN						**0.78**		**$0.58**
-DESIGN SERVICE CENTER - IMPLEMENTOR								
PROB #1 = % of orders manually handled by the Implementor Center								
Screen WFA (Work Force Administration for circuit	5	1.000				5.00	$43.81	$3.65
Contact Customer	5	1.000				5.00	$43.81	$3.65
Complete Circuit in WFA Control	5	1.000				5.00	$43.81	$3.65
Subtotal - DESIGN SERVICE CENTER - IMPLEMENTOR						**15.00**		**$10.95**
Total For Service:						**168.84**		**$117.36**

NONRECURRING COST DETAIL SUMMARY

Study Name: NONRECURRING ELEMENTS
Study Year: 2002
Analyst: Deffley/Eoriatti
Product Group: Interconnection

State: South Dakota

	Work Item	Time Minutes	Prob #1	Prob #2	Prob #3	Prob #4	Applied Time (Minutes)	Labor /Hour	Cost
	A	B	C	D	E	F	G	H	I
							B * (C Thru F)		H * (G/60)

NEW UNE- P PBX DID - PER TRUNK (con't)

		Cost Calculation		Cost Factor	Cost
		B	C	D	E
23402	**Direct Cost**				$117.36
23403					
23404					
23405					
23406					
23407	***Marketing & Business Fees***				
23408	Product Management Expense	D23408*E23402		0.019957	$2.34
23409	Sales Expense	D23409*E23402		0.011877	$1.39
23410	Product Advertising Expense	D23410*E23402		0.000000	$0.00
23411	Business Fees (Other Operating Taxes)	D23411*Sum(E23402:E23410)		0.001483	$0.18
23412	***Total Marketing & Business Fees***	Sum(E23402:E23411)			$3.92
23413					
23414	***Sub-Total Direct Cost & Marketing***	E23402+E23412			$121.28
23415					
23416	***Other Direct Expenses***				
23417	Network Operations	D23417*E23414		0.034832	$4.22
23418	Network Support Assets	D23418*E23414		0.014703	$1.78
23419	General Support Assets	D23419*E23414		0.088742	$10.76
23420	General Purpose Computers	D23420*E23414		0.043342	$5.26
23421	Uncollectible	D23421*E23414		0.003786	$0.46
23422	Accounting & Finance Expense	D23422*E23414		0.007346	$0.89
23423	Human Resources Expense	D23423*E23414		0.008294	$1.01
23424	Information Management Expense	D23424*E23414		0.070887	$8.60
23425	Intanglbles	D23425*E23414		0.000000	$0.00
23426	***Total Other Direct Expenses***	Sum(E23417:E23425)			$32.98
23427					
23428	***TELRIC***	E23417+E23426			$154.26
23429					
23430	***Common***				
23431	Executive Expense	D23431*E23428		0.011267	$1.74
23432	Planning Expense	D23432*E23428		0.000525	$0.08
23433	External Relations Expense	D23433*E23428		0.037846	$5.84
23434	Legal Expense	D23434*E23428		0.004717	$0.73
23435	Other Procurement Expense	D23435*E23428		0.001860	$0.29
23436	Research & Development Expense	D23436*E23428		0.000006	$0.00
23437	Other General and Admin Expense	D23437*E23428		0.015064	$2.32
23438	***Common Costs***	Sum(E23431:E23437)			$11.00
23439					
23440	***TELRIC + Common Costs***	E23428+E23438			$165.26

NONRECURRING COST DETAIL SUMMARY

Study Name: NONRECURRING ELEMENTS
Study Year: 2002
Analyst: Deffley/Eoriatti
Product Group: Interconnection

State: South Dakota

ENRC Version: 2.16
Date: 06/03/02

Work Item	Time Minutes	Prob #1	Prob #2	Prob #3	Prob #4	Applied Time (Minutes)	Labor /Hour	Cost
A	B	C	D	E	F	G	H	I
						B * (C Thru F)		H * (G/60)
NEW UNE-P 2B+D BRI ISDN								
****ADD****								
-INTERCONNECTION SERVICER CENTER								
1st Column = times								
Reviews LSR for completeness and accuracy, contractual entries (analyze request to determine co-provider, type of order and installation option)								
Recevie LSR	5	1.000				5.00	$39.16	$3.26
Exchange Info-Obtain Central office, name, address and office type, Access Telephone Address Guide to obtain the central office address and validate end user address, verify ISDN capability of loop								
Exchange Info - Obtain CO	4	1.000				4.00	$39.16	$2.61
CPPD lookup billing USOC's for co-provider								
CPPD lookup	2	1.000				2.00	$39.16	$1.31
Summary Bill List look up BTN#, tax code and bill date								
Summary Bill List look up	2	1.000				2.00	$39.16	$1.31
Determine critical date	1	1.000				1.00	$39.16	$0.65
Type, review and submit to customer the Firm Order Confirmation (FOC)								
Review FOC	3	1.000				3.00	$39.16	$1.96
Input order into service order processor (manually typing and formatting of all order for billing and provisioning)								
Issue Service order	10	1.000				10.00	$39.16	$6.53
Ensure order is successfully distributed to the systems and is ready for provisioning								
Service Order Analysis & Control (SOAC)	3	1.000				3.00	$39.16	$1.96
Includes handling calls from other departments working the order								
Call Handling	5	0.600				3.00	$39.16	$1.96
Handling of problems on the LSR, provisioning issues such as conditioning, facility problems cable & pair, and typing problems handled by the center.								
Error on Service order (ESOI)	5	0.600				3.00	$39.16	$1.96
Subtotal - INTERCONNECTION SERVICER CENTER						**36.00**		**$23.50**
-LOOP PROVISIONING CENTER								
1ST COLUMN = TIMES								
2ND COLUMN = .40 IS THE PROBABILITY A LOOP ORDER WILL FALL OUT FOR MANUAL ASSISTANCE.								
Clearing time per RMA(Req for man asst)	11.25	0.400				4.50	$37.78	$2.83
Subtotal - LOOP PROVISIONING CENTER						**4.50**		**$2.83**
-DESIGN SERVICE CENTER - DESIGN								
PROB #1 = Probability % manual work is required. Reciprocal is mechanization rate.								
Order handling/screening	5	0.200				1.00	$44.31	$0.74

NONRECURRING COST DETAIL SUMMARY

Study Name: NONRECURRING ELEMENTS
Study Year: 2002
Analyst: Deffley/Eoriatti
Product Group: Interconnection

ENRC Version: 2.16
Date: 06/03/02

State: South Dakota

Work Item	Time Minutes	Prob #1	Prob #2	Prob #3	Prob #4	Applied Time (Minutes)	Labor /Hour	Cost
A	B	C	D	E	F	G B * (C Thru F)	H	I H * (G/60)
NEW UNE-P 2B+D BRI ISDN (con't)								
Generic Order Control order log	6	0.200				1.20	$44.31	$0.89
Enter Work Authorization Mask	5	0.100				0.50	$44.31	$0.37
Prepare loop input/DRI (design related info)	10	0.200				2.00	$44.31	$1.48
Circuit Design	20	0.100				2.00	$44.31	$1.48
Distribute Word (Work Order Record Detail) documents	2	0.050				0.10	$44.31	$0.07
Subtotal - DESIGN SERVICE CENTER - DESIGN						**6.80**		**$5.02**
-CENTRAL OFFICE TECHNICIAN								
PROB #1 = average number per trunk group								
.04 based on average of 24 members per group (1/23)								
Analyze order 1st trunk	5	1.000				5.00	$43.81	$3.65
Analyze order addl trunk	5	0.040				0.20	$43.81	$0.15
Complete Cross connect 1st trunk	4	1.000				4.00	$43.81	$2.92
Complete Cross connect addl trunk	4	0.040				0.16	$43.81	$0.12
Complete Loop Qualification 1st trunk	2	1.000				2.00	$43.81	$1.46
Complete Loop Qualification addl trunk	2	0.040				0.08	$43.81	$0.06
Record DVA Test Results 1st trunk	2	1.000				2.00	$43.81	$1.46
Record DVA Test Results addl trunk	2	0.040				0.08	$43.81	$0.06
Post DVA work complete in WFA-DI 1st trunk	2	1.000				2.00	$43.81	$1.46
Post DVA work complete in WFA-DI addl trunk	2	0.040				0.08	$43.81	$0.06
Analyze DD WFADI work request 1st trunk	2	1.000				2.00	$43.81	$1.46
Analyze DD WFADI work request addl trunk	1	0.040				0.04	$43.81	$0.03
Set up of DD test with I&M tech 1st trunk	2	1.000				2.00	$43.81	$1.46
Set up of DD test with I&M tech addl trunk	1	0.040				0.04	$43.81	$0.03
Complete DD work status with CCTI 1st trunk	3	1.000				3.00	$43.81	$2.19
Complete DD work status with CCTI addl trunk	1	0.040				0.04	$43.81	$0.03
Subtotal - CENTRAL OFFICE TECHNICIAN						**22.72**		**$16.59**
-LOAD RESOURCE ADMINISTRATION CENTER (LRAC)								
Screen order	2	1.000				2.00	$37.78	$1.26
Load work request to technician	5	1.000				5.00	$37.78	$3.15
Close out work request with technician	3	1.000				3.00	$37.78	$1.89
Subtotal - LOAD RESOURCE ADMINISTRATION CENTER (LRAC,						**10.00**		**$6.30**
-INSTALLATION/FIELD TECHNICIAN								
Analyze order	1	1.000				1.00	$42.68	$0.71
Travel to end user premises	21	1.000				21.00	$42.68	$14.94
Complete AP/SAC Point wiring	13	0.200				2.60	$42.68	$1.85
Complete Service Terminal Work	15	0.200				3.00	$42.68	$2.13
Customer Contact	5	1.000				5.00	$42.68	$3.56

NONRECURRING COST DETAIL SUMMARY

Study Name: NONRECURRING ELEMENTS
Study Year: 2002
Analyst: Deffley/Eoriatti
Product Group: Interconnection

State: South Dakota

Work Item	Time Minutes	Prob #1	Prob #2	Prob #3	Prob #4	Applied Time (Minutes)	Labor /Hour	Cost
A	B	C	D	E	F	G	H	I
						B * (C Thru F)		H * (G/60)
NEW UNE-P 2B+D BRI ISDN (con't)								
Contact CCT-I to work order	3	1.000				3.00	$42.68	$2.13
Complete Performance/Conformance Testing	15	1.000				15.00	$42.68	$10.67
Complete work request with Load Specialist	3	1.000				3.00	$42.68	$2.13
Subtotal - INSTALLATION/FIELD TECHNICIAN						**53.60**		**$38.13**
-SERVICE DELIVERY IMPLEMENTOR								
Screen WFA (Work Force Administration) for circuit	10	1.000				10.00	$43.81	$7.30
Verify LNO (Local Network Operation) completion	10	1.000				10.00	$43.81	$7.30
Complete performance testing	15	1.000				15.00	$43.81	$10.95
Notify customer/co-provider of work completion	5	1.000				5.00	$43.81	$3.65
Post order complete in WFA/C (Work Force Administration - Control Module)	10	1.000				10.00	$43.81	$7.30
Subtotal - SERVICE DELIVERY IMPLEMENTOR						**50.00**		**$36.51**
-RCMAC								
1st probability is time applied to all switch types								
Translations - 2B+D	4	1.000				4.00	$43.81	$2.92
Subtotal - RCMAC						**4.00**		**$2.92**
-RCMAC								
1st probability is % by switch type								
AIOD - 5E	1	0.660				0.66	$43.81	$0.48
AIOD - DMS	1	0.340				0.34	$43.81	$0.25
ADDITIONAL CALL APPEARANCE - 5E	1	0.660				0.66	$43.81	$0.48
ADDITIONAL CALL APPEARANCE - DMS	5	0.340				1.70	$43.81	$1.24
B CHANNEL CIRCUIT SWITCHED DATA - 5E	8	0.660				5.28	$43.81	$3.86
B CHANNEL CIRCUIT SWITCHED DATA - DMS	8	0.340				2.72	$43.81	$1.99
CALL EXCLUSION (MADN)(PICK ONE) AUTO OR MANUAL - 5E	1	0.660				0.66	$43.81	$0.48
CALL EXCLUSION (MADN)(PICK ONE) AUTO OR MANUAL - DMS	1	0.340				0.34	$43.81	$0.25
CALL FORWARD BUSY LINE CSD - 5E	1	0.660				0.66	$43.81	$0.48
CALL FORWARD BUSY LINE CSD - DMS	1	0.340				0.34	$43.81	$0.25
CALL FORWARD DON'T ANSWER CSD - 5E	1	0.660				0.66	$43.81	$0.48
CALL FORWARD DON'T ANSWER CSD - DMS	1	0.340				0.34	$43.81	$0.25
CALL FORWARD VARIABLE CSD - 5E	1	0.660				0.66	$43.81	$0.48
CALL FORWARD VARIABLE CSD - DMS	1	0.340				0.34	$43.81	$0.25
CALL FORWARD BUSY LINE CSV - 5E	1	0.660				0.66	$43.81	$0.48
CALL FORWARD BUSY LINE CSV - DMS	1	0.340				0.34	$43.81	$0.25
CALL FORWARD DON'T ANSWER CSV - 5E	1	0.660				0.66	$43.81	$0.48
CALL FORWARD DON'T ANSWER CSV - DMS	1	0.340				0.34	$43.81	$0.25
CALL FORWARD VARIABLE CSV - 5E	1	0.660				0.66	$43.81	$0.48
CALL FORWARD VARIABLE CSV - DMS	1	0.340				0.34	$43.81	$0.25

NONRECURRING COST DETAIL SUMMARY

Study Name: NONRECURRING ELEMENTS
Study Year: 2002
Analyst: Deffley/Eoriatti
Product Group: Interconnection

ENRC Version: 2.16
Date: 06/03/02

State: South Dakota

Work Item	Time Minutes	Prob #1	Prob #2	Prob #3	Prob #4	Applied Time (Minutes)	Labor /Hour	Cost
A	B	C	D	E	F	G	H	I
						B * (C Thru F)		H * (G/60)
NEW UNE-P 2B+D BRI ISDN (con't)								
CALL HOLD - 5E	1	0.660				0.66	$43.81	$0.48
CALL HOLD - DMS	1	0.340				0.34	$43.81	$0.25
CALL TRANSFER - DMS	1	0.340				0.34	$43.81	$0.25
CALLING NUMBER DELIVERY BLOCKING/CALL - 5E	1	0.660				0.66	$43.81	$0.48
CALLING NUMBER DELIVERY BLOCKING/CALL - DMS	1	0.340				0.34	$43.81	$0.25
CALLING PARTY NUMBER DELIVERY, ONLY, FLAT, ALL - 5E	1	0.660				0.66	$43.81	$0.48
CALLING PARTY NUMBER DELIVERY, ONLY, FLAT, ALL - DMS	1	0.340				0.34	$43.81	$0.25
CONFERENCE CALLING 3 - WAY - 5E	1	0.660				0.66	$43.81	$0.48
CONFERENCE CALLING 3 - WAY - DMS	1	0.340				0.34	$43.81	$0.25
D CHANNEL PACKET SWITCHED DATA - 5E	8	0.660				5.28	$43.81	$3.86
D CHANNEL PACKET SWITCHED DATA - DMS	8	0.340				2.72	$43.81	$1.99
DISPLAY NUMBER CALLING LINE IDENTIFICATION (OCLID) - 5E	1	0.660				0.66	$43.81	$0.48
DISPLAY/DISPLAYED CALLED NUMBER (ICLID) - 5E	1	0.340				0.34	$43.81	$0.25
DROP - DMS	1	0.340				0.34	$43.81	$0.25
INTERCOM (AUTO/GROUP) 2 FEATURES - 5E	2	0.660				1.32	$43.81	$0.96
INTERCOM (AUTO/GROUP) 2 FEATURES - DMS	2	0.340				0.68	$43.81	$0.50
MESSAGE WAITING INDICATOR AUDIBLE/VISUAL - 5E	1	0.660				0.66	$43.81	$0.48
MESSAGE WAITING INDICATOR AUDIBLE/VISUAL - DMS	1	0.340				0.34	$43.81	$0.25
PRIMARY DIRECTORY NUMBER - 5E	1	0.660				0.66	$43.81	$0.48
PRIMARY DIRECTORY NUMBER - DMS	1	0.340				0.34	$43.81	$0.25
RINGING NORMAL - DMS	1	0.340				0.34	$43.81	$0.25
SECONDARY DIRECTORY NUMBER - 5E	3	0.660				1.98	$43.81	$1.45
SECONDARY DIRECTORY NUMBER - DMS	3	0.340				1.02	$43.81	$0.74
SHARED CALL APPEARANCE (QTY 2) - 5E	1	0.660				0.66	$43.81	$0.48
SHARED CALL APPEARANCE (QTY 2) - DMS	1	0.340				0.34	$43.81	$0.25
SPEED CALL 30 - 5E	1	0.660				0.66	$43.81	$0.48
SPEED CALL 30 - DMS	1	0.340				0.34	$43.81	$0.25
X.25 FLOW CONTROL PARAMETER NEGOTIATION, PER CALL - 5E	1	0.660				0.66	$43.81	$0.48
X.25 FLOW CONTROL PARAMETER NEGOTIATION, PER CALL - DMS	1	0.340				0.34	$43.81	$0.25
X.25 LOGICAL CHANNELS - 5E	1	0.660				0.66	$43.81	$0.48
X.25 LOGICAL CHANNELS - DMS	1	0.340				0.34	$43.81	$0.25
X.25 THROUGHTOUT CLASS NEGOTIATION, PER CALL - 5E	1	0.660				0.66	$43.81	$0.48
X.25 THROUGHTOUT CLASS NEGOTIATION, PER CALL - DMS	1	0.340				0.34	$43.81	$0.25
Subtotal - RCMAC						**44.38**		**$32.40**
-NROC- COMPLEX TRANSLATIONS								
1st probability is % by switch type								
2nd probability weighting of SLS line counts to ISDN equipped Central Offices								
(137,938 lines to 382 central offices)								
CALL EXCLUSION (MADN) (PICK ONE) AUTO OR MANUAL - ADMIN - 5E	7	0.660	0.003			0.01	$41.45	$0.01
CALL EXCLUSION (MADN) (PICK ONE) AUTO OR MANUAL - MTCE - 5E	7	0.660	0.003			0.01	$41.45	$0.01
CALL FORWARD BUSY LINE CSD - ADMIN - 5E	30	0.660	0.003			0.06	$41.45	$0.04

NONRECURRING COST DETAIL SUMMARY

Study Name: NONRECURRING ELEMENTS
Study Year: 2002
Analyst: Deffley/Eoriatti
Product Group: Interconnection

State: South Dakota

Work Item	Time Minutes	Prob #1	Prob #2	Prob #3	Prob #4	Applied Time (Minutes)	Labor /Hour	Cost
A	B	C	D	E	F	G	H	I
						B * (C Thru F)		H * (G/60)
NEW UNE-P 2B+D BRI ISDN (con't)								
CALL FORWARD BUSY LINE CSD - MTCE - 5E	30	0.660	0.003			0.06	$41.45	$0.04
CALL FORWARD DON'T ANSWER CSD - ADMIN - 5E	30	0.660	0.003			0.06	$41.45	$0.04
CALL FORWARD DON'T ANSWER CSD - MTCE - 5E	30	0.660	0.003			0.06	$41.45	$0.04
CALL FORWARD DON'T ANSWER CSD - ADMIN - DMS	10	0.340	0.003			0.01	$41.45	$0.01
CALL FORWARD DON'T ANSWER CSD - MTCE - DMS	10	0.340	0.003			0.01	$41.45	$0.01
CALL FORWARD VARIABLE CSD - ADMIN - 5E	30	0.660	0.003			0.06	$41.45	$0.04
CALL FORWARD VARIABLE CSD - MTCE - 5E	30	0.660	0.003			0.06	$41.45	$0.04
CALL FORWARD VARIABLE CSD - ADMIN - DMS	20	0.340	0.003			0.02	$41.45	$0.01
CALL FORWARD VARIABLE CSD - MTCE - DMS	25	0.340	0.003			0.03	$41.45	$0.02
CALL FORWARD BUSY LINE CSV - ADMIN - 5E	30	0.660	0.003			0.06	$41.45	$0.04
CALL FORWARD BUSY LINE CSV - MTCE - 5E	30	0.660	0.003			0.06	$41.45	$0.04
CALL FORWARD DON'T ANSWER CSV - ADMIN - 5E	30	0.660	0.003			0.06	$41.45	$0.04
CALL FORWARD DON'T ANSWER CSV - MTCE - 5E	30	0.660	0.003			0.06	$41.45	$0.04
CALL FORWARD DON'T ANSWER CSV - ADMIN - DMS	10	0.340	0.003			0.01	$41.45	$0.01
CALL FORWARD DON'T ANSWER CSV - MTCE - DMS	10	0.340	0.003			0.01	$41.45	$0.01
CALL FORWARD VARIABLE CSV - ADMIN - 5E	7	0.660	0.003			0.01	$41.45	$0.01
CALL FORWARD VARIABLE CSV - MTCE - 5E	7	0.660	0.003			0.01	$41.45	$0.01
CALL FORWARD VARIABLE CSV - ADMIN - DMS	20	0.340	0.003			0.02	$41.45	$0.01
CALL FORWARD VARIABLE CSV - MTCE - DMS	25	0.340	0.003			0.03	$41.45	$0.02
CALL HOLD - ADMIN - DMS	5	0.340	0.003			0.01	$41.45	$0.00
CALL HOLD - MTCE - DMS	10	0.340	0.003			0.01	$41.45	$0.01
CALL TRANSFER - ADMIN - 5E	7	0.660	0.003			0.01	$41.45	$0.01
CALL TRANSFER - MTCE - 5E	7	0.660	0.003			0.01	$41.45	$0.01
CALL TRANSFER - ADMIN - DMS	10	0.340	0.003			0.01	$41.45	$0.01
CALL TRANSFER - MTCE - DMS	15	0.340	0.003			0.02	$41.45	$0.01
CALLING NUMBER DELIVERY BLOCKING/CALL - ADMIN - 5E	10	0.660	0.003			0.02	$41.45	$0.01
CALLING NUMBER DELIVERY BLOCKING/CALL - MTCE - 5E	10	0.660	0.003			0.02	$41.45	$0.01
CALLING NUMBER DELIVERY BLOCKING/CALL - ADMIN - DMS	20	0.340	0.003			0.02	$41.45	$0.01
CALLING NUMBER DELIVERY BLOCKING/CALL - MTCE - DMS	20	0.340	0.003			0.02	$41.45	$0.01
COMMON BLOCK - ADMIN - 5E	10	0.660	0.003			0.02	$41.45	$0.01
COMMON BLOCK - MTCE - 5E	10	0.660	0.003			0.02	$41.45	$0.01
COMMON BLOCK - ADMIN - DMS	335	0.340	0.003			0.34	$41.45	$0.24
COMMON BLOCK - MTCE - DMS	580	0.340	0.003			0.59	$41.45	$0.41
CONFERENCE CALLING 3 WAY - ADMIN - 5E	7	0.660	0.003			0.01	$41.45	$0.01
CONFERENCE CALLING 3 WAY - MTCE - 5E	7	0.660	0.003			0.01	$41.45	$0.01
D CHANNEL PACKET SWITCHED DATA - ADMIN - DMS	15	0.340	0.003			0.02	$41.45	$0.01
D CHANNEL PACKET SWITCHED DATA - MTCE - DMS	10	0.340	0.003			0.01	$41.45	$0.01
DROP - ADMIN - 5E	7	0.660	0.003			0.01	$41.45	$0.01
DROP - MTCE - 5E	7	0.660	0.003			0.01	$41.45	$0.01
INTERCOM (AUTO/GROUP) 2 FEATURES - ADMIN - DMS	15	0.340	0.003			0.02	$41.45	$0.01
INTERCOM (AUTO/GROUP) 2 FEATURES - MTCE - DMS	15	0.340	0.003			0.02	$41.45	$0.01
MESSAGE WAITING INDICATOR AUDIBLE/VISUAL - ADMIN - 5E	7	0.660	0.003			0.01	$41.45	$0.01
MESSAGE WAITING INDICATOR AUDIBLE/VISUAL - MTCE - 5E	7	0.660	0.003			0.01	$41.45	$0.01

NONRECURRING COST DETAIL SUMMARY

Study Name: NONRECURRING ELEMENTS
Study Year: 2002
Analyst: Deffley/Eoriatti
Product Group: Interconnection

ENRC Version: 2.16
Date: 06/03/02

State: South Dakota

Work Item	Time Minutes	Prob #1	Prob #2	Prob #3	Prob #4	Applied Time (Minutes)	Labor /Hour	Cost
A	B	C	D	E	F	G	H	I
						B * (C Thru F)		H * (G/60)
NEW UNE-P 2B+D BRI ISDN (con't)								
SPEED CALL 30 - ADMIN - 5E	7	0.660	0.003			0.01	$41.45	$0.01
SPEED CALL 30 - MTCE - 5E	7	0.660	0.003			0.01	$41.45	$0.01
SPEED CALL 30 - ADMIN - DMS	10	0.340	0.003			0.01	$41.45	$0.01
SPEED CALL 30 - MTCE - DMS	10	0.340	0.003			0.01	$41.45	$0.01
STANDARD CONFIGURATION GROUP - ADMIN - 5E	30	0.660	0.003			0.06	$41.45	$0.04
STANDARD CONFIGURATION GROUP - MTCE - 5E	30	0.660	0.003			0.06	$41.45	$0.04
Subtotal - NROC- COMPLEX TRANSLATIONS						**2.21**		**$1.53**
DISCONNECT								
-INTERCONNECT SERVICE CENTER								
1st Column = times								
Reviews LSR for completeness and accuracy, validate circuit/trunks belongs to the co-provider								
Receive LSR	3	1.000				3.00	$39.16	$1.96
Verifies existing account (accesses CSR in BOSS/CARS) and obtains closing billing address if applicable								
Verify existing account	2	1.000				2.00	$39.16	$1.31
Type, review and submit to customer the Firm Order Confirmation (FOC)								
Review FOC	2	1.000				2.00	$39.16	$1.31
Input disconnect order into the service order processor (manually typing and formatting of all order for billing and provisioning)								
Issue service order	10	1.000				10.00	$39.16	$6.53
Populate required fields								
Customer Request Management (CRM)	3	1.000				3.00	$39.16	$1.96
Ensure order is successfully distributed to the systems and is ready for provisioning								
Service Order Analysis & Control (SOAC)	3	1.000				3.00	$39.16	$1.96
Subtotal - INTERCONNECT SERVICE CENTER						**23.00**		**$15.01**
-LOOP PROVISIONING CENTER								
1ST COLUMN = TIMES								
2ND COLUMN = .40 IS THE PROBABILITY A LOOP ORDER WILL FALL OUT FOR MANUAL ASSISTANCE.								
Clearing time per RMA(Req for man asst)	11.25	0.400				4.50	$37.78	$2.83
Subtotal - LOOP PROVISIONING CENTER						**4.50**		**$2.83**
-DESIGN SERVICE CENTER - DESIGN								
PROB #1 = Probability % manual work is required. Reciprocal is mechanization rate.								
Order handling/screening	5	0.100				0.50	$44.31	$0.37

Work Item	Time Minutes	Prob #1	Prob #2	Prob #3	Prob #4	Applied Time (Minutes)	Labor /Hour	Cost
A	B	C	D	E	F	G B * (C Thru F)	H	I H * (G/60)
NEW UNE-P 2B+D BRI ISDN (con't)								
Generic Order Control order log	6	0.100				0.60	$44.31	$0.44
Enter Work Authorization Mask	5	0.100				0.50	$44.31	$0.37
Disconnect Circuit	5	0.100				0.50	$44.31	$0.37
Distribute Word Documents	2	0.050				0.10	$44.31	$0.07
Subtotal - DESIGN SERVICE CENTER - DESIGN						**2.20**		**$1.62**
-CENTRAL OFFICE TECHNICIAN								
PROB #1 = average number per trunk group								
.04 based on average of 24 members per group (1/23)								
Analyze order 1st trunk	5	1.000				5.00	$43.81	$3.65
Analyze order addl trunk	5	0.040				0.20	$43.81	$0.15
Remove cross-connect 1st trunk	2.3	1.000				2.30	$43.81	$1.68
Remove cross-connect addl trunk	2.3	0.040				0.09	$43.81	$0.07
Complete order in WFA (Work Force Administration) 1st trunk	2	1.000				2.00	$43.81	$1.46
Complete order in WFA (Work Force Administration) addl trunk	2	0.040				0.08	$43.81	$0.06
Subtotal - CENTRAL OFFICE TECHNICIAN						**9.67**		**$7.06**
-SERVICE DELIVERY IMPLEMENTOR								
Scrren WFA (Work Force Administration) for circuit	5	1.000				5.00	$43.81	$3.65
Contact Customer	5	1.000				5.00	$43.81	$3.65
Complete circuit in WFA/C (Work Force Adminstration - Control Module)	5	1.000				5.00	$43.81	$3.65
Subtotal - SERVICE DELIVERY IMPLEMENTOR						**15.00**		**$10.95**
-RCMAC								
1st probability is time applied to all switch types								
Translations - 2B+D	4	1.000				4.00	$43.81	$2.92
Subtotal - RCMAC						**4.00**		**$2.92**
-RCMAC								
1st probability is % by switch type								
AIOD - 5E	1	0.660				0.66	$43.81	$0.48
AIOD - DMS	1	0.340				0.34	$43.81	$0.25
ADDITIONAL CALL APPEARANCE - 5E	1	0.660				0.66	$43.81	$0.48
ADDITIONAL CALL APPEARANCE - DMS	1	0.340				0.34	$43.81	$0.25
B CHANNEL CIRCUIT SWITCHED DATA - 5E	1	0.660				0.66	$43.81	$0.48
B CHANNEL CIRCUIT SWITCHED DATA - DMS	1	0.340				0.34	$43.81	$0.25
CALL EXCLUSION (MADN)(PICK ONE) AUTO OR MANUAL - 5E	1	0.660				0.66	$43.81	$0.48
CALL EXCLUSION (MADN)(PICK ONE) AUTO OR MANUAL - DMS	1	0.340				0.34	$43.81	$0.25
CALL FORWARD BUSY LINE CSD - 5E	1	0.660				0.66	$43.81	$0.48

Work Item	Time Minutes	Prob #1	Prob #2	Prob #3	Prob #4	Applied Time (Minutes)	Labor /Hour	Cost
A	B	C	D	E	F	G	H	I
						B * (C Thru F)		H * (G/60)
NEW UNE-P 2B+D BRI ISDN (con't)								
CALL FORWARD BUSY LINE CSD - DMS	1	0.340				0.34	$43.81	$0.25
CALL FORWARD DON'T ANSWER CSD - 5E	1	0.660				0.66	$43.81	$0.48
CALL FORWARD DON'T ANSWER CSD - DMS	1	0.340				0.34	$43.81	$0.25
CALL FORWARD VARIABLE CSD - 5E	1	0.660				0.66	$43.81	$0.48
CALL FORWARD VARIABLE CSD - DMS	1	0.340				0.34	$43.81	$0.25
CALL FORWARD BUSY LINE CSV - 5E	1	0.660				0.66	$43.81	$0.48
CALL FORWARD BUSY LINE CSV - DMS	1	0.340				0.34	$43.81	$0.25
CALL FORWARD DON'T ANSWER CSV - 5E	1	0.660				0.66	$43.81	$0.48
CALL FORWARD DON'T ANSWER CSV - DMS	1	0.340				0.34	$43.81	$0.25
CALL FORWARD VARIABLE CSV - 5E	1	0.660				0.66	$43.81	$0.48
CALL FORWARD VARIABLE CSV - DMS	1	0.340				0.34	$43.81	$0.25
CALL HOLD - 5E	1	0.660				0.66	$43.81	$0.48
CALL HOLD - DMS	1	0.340				0.34	$43.81	$0.25
CALL TRANSFER - DMS	1	0.340				0.34	$43.81	$0.25
CALLING NUMBER DELIVERY BLOCKING/CALL - 5E	1	0.660				0.66	$43.81	$0.48
CALLING NUMBER DELIVERY BLOCKING/CALL - DMS	1	0.340				0.34	$43.81	$0.25
CALLING PARTY NUMBER DELIVERY, ONLY, FLAT, ALL - 5E	1	0.660				0.66	$43.81	$0.48
CALLING PARTY NUMBER DELIVERY, ONLY, FLAT, ALL - DMS	1	0.340				0.34	$43.81	$0.25
CONFERENCE CALLING 3 - WAY - 5E	1	0.660				0.66	$43.81	$0.48
CONFERENCE CALLING 3 - WAY - DMS	1	0.340				0.34	$43.81	$0.25
D CHANNEL PACKET SWITCHED DATA - 5E	1	0.660				0.66	$43.81	$0.48
D CHANNEL PACKET SWITCHED DATA - DMS	1	0.340				0.34	$43.81	$0.25
DISPLAY NUMBER CALLING LINE IDENTIFICATION (OCLID) - 5E	1	0.660				0.66	$43.81	$0.48
DISPLAY/DISPLAYED CALLED NUMBER (ICLID) - 5E	1	0.660				0.66	$43.81	$0.48
DROP - DMS	1	0.340				0.34	$43.81	$0.25
INTERCOM (AUTO/GROUP) 2 FEATURES - 5E	1	0.660				0.66	$43.81	$0.48
INTERCOM (AUTO/GROUP) 2 FEATURES - DMS	1	0.340				0.34	$43.81	$0.25
MESSAGE WAITING INDICATOR AUDIBLE/VISUAL - 5E	1	0.660				0.66	$43.81	$0.48
MESSAGE WAITING INDICATOR AUDIBLE/VISUAL - DMS	1	0.340				0.34	$43.81	$0.25
PRIMARY DIRECTORY NUMBER - 5E	1	0.660				0.66	$43.81	$0.48
PRIMARY DIRECTORY NUMBER - DMS	1	0.340				0.34	$43.81	$0.25
RINGING NORMAL - DMS	1	0.340				0.34	$43.81	$0.25
SECONDARY DIRECTORY NUMBER - 5E	1	0.660				0.66	$43.81	$0.48
SECONDARY DIRECTORY NUMBER - DMS	1	0.340				0.34	$43.81	$0.25
SHARED CALL APPEARANCE (QTY 2) - 5E	1	0.660				0.66	$43.81	$0.48
SHARED CALL APPEARANCE (QTY 2) - DMS	1	0.340				0.34	$43.81	$0.25
SPEED CALL 30 - 5E	1	0.660				0.66	$43.81	$0.48
SPEED CALL 30 - DMS	1	0.340				0.34	$43.81	$0.25
X.25 FLOW CONTROL PARAMETER NEGOTIATION, PER CALL - 5E	1	0.660				0.66	$43.81	$0.48
X.25 FLOW CONTROL PARAMETER NEGOTIATION, PER CALL - DMS	1	0.340				0.34	$43.81	$0.25
X.25 LOGICAL CHANNELS - 5E	1	0.660				0.66	$43.81	$0.48
X.25 LOGICAL CHANNELS - DMS	1	0.340				0.34	$43.81	$0.25
X.25 THROUGHTOUT CLASS NEGOTIATION, PER CALL - 5E	1	0.660				0.66	$43.81	$0.48

NONRECURRING COST DETAIL SUMMARY

Study Name: NONRECURRING ELEMENTS
Study Year: 2002
Analyst: Deffley/Eoriatti
Product Group: Interconnection

ENRC Version: 2.16
Date: 06/03/02

State: South Dakota

Work Item	Time Minutes	Prob #1	Prob #2	Prob #3	Prob #4	Applied Time (Minutes)	Labor /Hour	Cost
A	B	C	D	E	F	G B * (C Thru F)	H	I H * (G/60)
NEW UNE-P 2B+D BRI ISDN (con't)								
X.25 THROUGHTOUT CLASS NEGOTIATION, PER CALL - DMS	1	0.340				0.34	$43.81	$0.25
Subtotal - RCMAC						**26.34**		**$19.23**
Total For Service:						**318.92**		**$225.36**

NONRECURRING COST DETAIL SUMMARY

Study Name: NONRECURRING ELEMENTS
Study Year: 2002
Analyst: Deffley/Eoriatti
Product Group: Interconnection

State: South Dakota

	Work Item	Time Minutes	Prob #1	Prob #2	Prob #3	Prob #4	Applied Time (Minutes)	Labor /Hour	Cost
	A	B	C	D	E	F	G	H	I
							B * (C Thru F)		H * (G/60)

NEW UNE-P 2B+D BRI ISDN (con't)

		Cost Calculation		Cost Factor	Cost
		B	C	D	E
23852	**Direct Cost**				$225.36
23853					
23854					
23855					
23856					
23857	***Marketing & Business Fees***				
23858	Product Management Expense	D23858*E23852		0.019957	$4.50
23859	Sales Expense	D23859*E23852		0.011877	$2.68
23860	Product Advertising Expense	D23860*E23852		0.000000	$0.00
23861	Business Fees (Other Operating Taxes)	D23861*Sum(E23852:E23860)		0.001483	$0.34
23862	***Total Marketing & Business Fees***	Sum(E23852:E23861)			$7.52
23863					
23864	***Sub-Total Direct Cost & Marketing***	E23852+E23862			$232.88
23865					
23866	***Other Direct Expenses***				
23867	Network Operations	D23867*E23864		0.034832	$8.11
23868	Network Support Assets	D23868*E23864		0.014703	$3.42
23869	General Support Assets	D23869*E23864		0.088742	$20.67
23870	General Purpose Computers	D23870*E23864		0.043342	$10.09
23871	Uncollectible	D23871*E23864		0.003786	$0.88
23872	Accounting & Finance Expense	D23872*E23864		0.007346	$1.71
23873	Human Resources Expense	D23873*E23864		0.008294	$1.93
23874	Information Management Expense	D23874*E23864		0.070887	$16.51
23875	Intangibles	D23875*E23864		0.000000	$0.00
23876	***Total Other Direct Expenses***	Sum(E23867:E23875)			$63.33
23877					
23878	***TELRIC***	E23867+E23876			$296.21
23879					
23880	***Common***				
23881	Executive Expense	D23881*E23878		0.011267	$3.34
23882	Planning Expense	D23882*E23878		0.000525	$0.16
23883	External Relations Expense	D23883*E23878		0.037846	$11.21
23884	Legal Expense	D23884*E23878		0.004717	$1.40
23885	Other Procurement Expense	D23885*E23878		0.001860	$0.55
23886	Research & Development Expense	D23886*E23878		0.000006	$0.00
23887	Other General and Admin Expense	D23887*E23878		0.015064	$4.46
23888	***Common Costs***	Sum(E23881:E23887)			$21.12
23889					
23890	***TELRIC + Common Costs***	E23878+E23888			$317.33

NONRECURRING COST DETAIL SUMMARY

Study Name: NONRECURRING ELEMENTS
Study Year: 2002
Analyst: Deffley/Eoriatti
Product Group: Interconnection

State: South Dakota

Work Item	Time Minutes	Prob #1	Prob #2	Prob #3	Prob #4	Applied Time (Minutes)	Labor /Hour	Cost
A	B	C	D	E	F	G	H	I
						B * (C Thru F)		H * (G/60)
NEW UNE-P DSS BASIC TRUNKS - IN-ONLY TRUNK								
ADD								
-INTERCONNECT SERVICE CENTER								
Column 1 = times								
Column 2 = occurrence								
Reviews LSR for completeness and accuracy, contractual entries (analyze request to determine co-provider, type of order and installation option)								
Receive and screen LSR	5	1.000				5.00	$39.16	$3.26
Verifies CFA or facility/circuit availability								
Verify CFA	4	1.000				4.00	$39.16	$2.61
Exchange Info-Obtain Central Office, name, address and office type, Access Telephone Address Guide to obtain the central office address and validate end user address								
Obtain Central Office info	1	1.000				1.00	$39.16	$0.65
CPPD-lookup billing USOCs for co-provider	2	1.000				2.00	$39.16	$1.31
Summary Bill List look up BTN#, tax code and bill date								
Summary bill look up	2	1.000				2.00	$39.16	$1.31
Determine Critical Dates	1	1.000				1.00	$39.16	$0.65
Type, review and submit to customer the Firm Order Confirmation (FOC)								
Review FOC	3	1.000				3.00	$39.16	$1.96
Input order into service order processor (manually typing and formatting of all order for billing and provisioning)								
Issue service order	10	1.000				10.00	$39.16	$6.53
Ensure order is successfully distributed to the systems and is ready for provisioning								
Service order Analysis & Control (SOAC)	3	1.000				3.00	$39.16	$1.96
Includes handling calls from other departments working the order								
Call Handling	5	0.600				3.00	$39.16	$1.96
Handling of problems on the LSR, provisioining issues such as conditioning, facility problems, cable & pair, and typing problems handled by the center								
Error on Service Order (ESOI)	5	0.600				3.00	$39.16	$1.96
Subtotal - INTERCONNECT SERVICE CENTER						**37.00**		**$24.15**
-DESIGN SERVICE CENTER - DESIGN								
PROB #1 = average number per trunk order								
.042 based on average of 24 members per group (1/24)								
.05, .95, .20, .80 = % of manual probability								
Order handling/screening	10	0.042	1.000			0.42	$44.31	$0.31
Validate DRI (Design Related Information) & WA (Work Authorization)	10	0.042	0.050			0.02	$44.31	$0.02
Validate DRI (Design Related Information) & WA (Work Authorization)	4	0.042	0.950			0.16	$44.31	$0.12
Build/Verify CD (Circuit Detail)	15	0.042	0.200			0.13	$44.31	$0.09

Work Item	Time Minutes	Prob #1	Prob #2	Prob #3	Prob #4	Applied Time (Minutes)	Labor /Hour	Cost
A	B	C	D	E	F	G B * (C Thru F)	H	I H * (G/60)
NEW UNE-P DSS BASIC TRUNKS - IN-ONLY TRUNK (con't)								
Build/Verify CD (Circuit Detail)	3	0.042	0.800			0.10	$44.31	$0.07
Distribute Documents	2	0.042	1.000			0.08	$44.31	$0.06
TAS	15	0.042	1.000			0.63	$44.31	$0.47
Subtotal - DESIGN SERVICE CENTER - DESIGN						**1.54**		**$1.14**
-DESIGN SERVICE CENTER - IMPLEMENTOR								
PROB #1 = average number per trunk order								
.042 based on average of 24 members								
per group (1/24)								
Screen WFA (Work Force Administration) for circuit	5	0.042				0.21	$43.81	$0.15
Verify LNO (Local Network Operation) completion	5	0.042				0.21	$43.81	$0.15
Notify customer	5	0.042				0.21	$43.81	$0.15
Complete circuit in WFA/C (Work Force Administration - Control Module)	10	0.042				0.42	$43.81	$0.31
Subtotal - DESIGN SERVICE CENTER - IMPLEMENTOR						**1.05**		**$0.77**
-COMPLEX TRANSLATIONS								
PROB #1 = % of time complex translations								
work is required								
Administrative	10	1.000				10.00	$41.45	$6.91
Maintenance	10	1.000				10.00	$41.45	$6.91
Subtotal - COMPLEX TRANSLATIONS						**20.00**		**$13.82**
DISCONNECT								
-INTERCONNECT SERVICE CENTER								
Column 1 = times								
Reviews LSR for completeness and accuracy, validate circuit/trunks belongs to the co-provider								
Receive LSR	3	1.000				3.00	$39.16	$1.96
Verifies existing account (access CSR in BOSS/CARS) and obtains closing bill address if applicable								
Verify existing account	2	1.000				2.00	$39.16	$1.31
Type, review and submit to customer the Firm Order Confirmation (FOC)								
Review FOC	2	1.000				2.00	$39.16	$1.31
Input disconnect order into the service order processor (manually typing and formatting of all order for billing and provisioning)								
Issue service order	10	1.000				10.00	$39.16	$6.53
Customer Request Management (CRM)	3	1.000				3.00	$39.16	$1.96
Ensure order is successfully distributed to the systems and is ready for provisioning								
Service order Analysis & Control (SOAC)	3	1.000				3.00	$39.16	$1.96

NONRECURRING COST DETAIL SUMMARY

Study Name: NONRECURRING ELEMENTS
Study Year: 2002
Analyst: Deffley/Eoriatti
Product Group: Interconnection

ENRC Version: 2.16
Date: 06/03/02

State: South Dakota

Work Item	Time Minutes	Prob #1	Prob #2	Prob #3	Prob #4	Applied Time (Minutes)	Labor /Hour	Cost
A	B	C	D	E	F	G B * (C Thru F)	H	I H * (G/60)
NEW UNE-P DSS BASIC TRUNKS - IN-ONLY TRUNK (con't)								
Subtotal - INTERCONNECT SERVICE CENTER						**23.00**		**$15.01**
-DESIGN SERVICE CENTER - DESIGN								
PROB #1 = average number per trunk order								
.042 based on average of 24 members								
per group (1/24)								
.05, .95 = % of manual probability								
Order handling/screening	10	0.042	1.000			0.42	$44.31	$0.31
PCList Trunks	2	0.042	1.000			0.08	$44.31	$0.06
Build/validate Work Authorization	5	0.042	0.050			0.01	$44.31	$0.01
Build/validate Work Authorization	2	0.042	0.950			0.08	$44.31	$0.06
Build/Verify CD (Circuit Detail)	10	0.042	0.050			0.02	$44.31	$0.02
Build/Verify CD (Circuit Detail)	2	0.042	0.950			0.08	$44.31	$0.06
Distribute Documents	2	0.042	1.000			0.08	$44.31	$0.06
Subtotal - DESIGN SERVICE CENTER - DESIGN						**0.78**		**$0.58**
-DESIGN SERVICE CENTER - IMPLEMENTOR								
PROB #1 = average number per trunk order								
.042 based on average of 24 members								
per group (1/24)								
Screen WFA (Work Force Administration) for circuit	10	0.042				0.42	$43.81	$0.31
Verify LNO (Local Network Operation) completion	10	0.042				0.42	$43.81	$0.31
Test Circuit	25	0.042				1.05	$43.81	$0.77
Contact Customer	5	0.042				0.21	$43.81	$0.15
Complete circuit in WFA/C (Work Force Administration - Control Module)	10	0.042				0.42	$43.81	$0.31
Subtotal - DESIGN SERVICE CENTER - IMPLEMENTOR						**2.52**		**$1.84**
Total For Service:						**85.89**		**$57.30**

NONRECURRING COST DETAIL SUMMARY

Study Name: NONRECURRING ELEMENTS
Study Year: 2002
Analyst: Deffley/Eoriatti
Product Group: Interconnection

ENRC Version: 2.16
Date: 06/03/02

State: South Dakota

	Work Item	Time Minutes	Prob #1	Prob #2	Prob #3	Prob #4	Applied Time (Minutes)	Labor /Hour	Cost
	A	B	C	D	E	F	G	H	I
							B * (C Thru F)		H * (G/60)

NEW UNE-P DSS BASIC TRUNKS - IN-ONLY TRUNK (con't)

		Cost Calculation		Cost Factor	Cost
		B	C	D	E
24032	**Direct Cost**				$57.30
24033					
24034					
24035					
24036					
24037	***Marketing & Business Fees***				
24038	Product Management Expense	D24038*E24032		0.019957	$1.14
24039	Sales Expense	D24039*E24032		0.011877	$0.68
24040	Product Advertising Expense	D24040*E24032		0.000000	$0.00
24041	Business Fees (Other Operating Taxes)	D24041*Sum(E24032:E24040)		0.001483	$0.09
24042	***Total Marketing & Business Fees***	Sum(E24032:E24041)			$1.91
24043					
24044	***Sub-Total Direct Cost & Marketing***	E24032+E24042			$59.21
24045					
24046	***Other Direct Expenses***				
24047	Network Operations	D24047*E24044		0.034832	$2.06
24048	Network Support Assets	D24048*E24044		0.014703	$0.87
24049	General Support Assets	D24049*E24044		0.088742	$5.25
24050	General Purpose Computers	D24050*E24044		0.043342	$2.57
24051	Uncollectible	D24051*E24044		0.003786	$0.22
24052	Accounting & Finance Expense	D24052*E24044		0.007346	$0.43
24053	Human Resources Expense	D24053*E24044		0.008294	$0.49
24054	Information Management Expense	D24054*E24044		0.070887	$4.20
24055	Intangibles	D24055*E24044		0.000000	$0.00
24056	***Total Other Direct Expenses***	Sum(E24047:E24055)			$16.10
24057					
24058	***TELRIC***	E24047+E24056			$75.31
24059					
24060	***Common***				
24061	Executive Expense	D24061*E24058		0.011267	$0.85
24062	Planning Expense	D24062*E24058		0.000525	$0.04
24063	External Relations Expense	D24063*E24058		0.037846	$2.85
24064	Legal Expense	D24064*E24058		0.004717	$0.36
24065	Other Procurement Expense	D24065*E24058		0.001860	$0.14
24066	Research & Development Expense	D24066*E24058		0.000006	$0.00
24067	Other General and Admin Expense	D24067*E24058		0.015064	$1.13
24068	***Common Costs***	Sum(E24061:E24067)			$5.37
24069					
24070	***TELRIC + Common Costs***	E24058+E24068			$80.68

Work Item	Time Minutes	Prob #1	Prob #2	Prob #3	Prob #4	Applied Time (Minutes)	Labor /Hour	Cost
A	B	C	D	E	F	G	H	I
						B * (C Thru F)		H * (G/60)
NEW UNE-P BASIC TRUNKS - OUT-ONLY TRUNK								
ADD								
-INTERCONNECT SERVICE CENTER								
Column 1 = times								
Column 2 = occurrence								
Reviews LSR for completeness and accuracy, contractual entries (analyze request to determine co-provider, type of order and installation option)								
Receive and screen LSR	5	1.000				5.00	$39.16	$3.26
Verifies CFA or facility/circuit availability								
Verify CFA	4	1.000				4.00	$39.16	$2.61
Exchange Info-Obtain Central Office, name, address and office type, Access Telephone Address Guide to obtain the central office address and validate end user address								
Obtain Central Office info	1	1.000				1.00	$39.16	$0.65
CPPD-lookup billing USOCs for co-provider	2	1.000				2.00	$39.16	$1.31
Summary Bill List look up BTN#, tax code and bill date								
Summary bill look up	2	1.000				2.00	$39.16	$1.31
Determine Critical Dates	1	1.000				1.00	$39.16	$0.65
Type, review and submit to customer the Firm Order Confirmation (FOC)								
Review FOC	3	1.000				3.00	$39.16	$1.96
Input order into service order processor (manually typing and formatting of all order for billing and provisioning)								
Issue service order	10	1.000				10.00	$39.16	$6.53
Ensure order is successfully distributed to the systems and is ready for provisioning								
Service order Analysis & Control (SOAC)	3	1.000				3.00	$39.16	$1.96
Includes handling calls from other departments working the order								
Call Handling	5	0.600				3.00	$39.16	$1.96
Handling of problems on the LSR, provisioining issues such as conditioning, facility problems, cable & pair, and typing problems handled by the center								
Error on Service Order (ESOI)	5	0.600				3.00	$39.16	$1.96
Subtotal - INTERCONNECT SERVICE CENTER						**37.00**		**$24.15**
-DESIGN SERVICE CENTER - DESIGN								
PROB #1 = average number per trunk order								
.042 based on average of 24 members per group (1/24)								
.05, .95, .20, .80 = % of manual probability								
Order handling/screening	10	0.042	1.000			0.42	$44.31	$0.31
Validate DRI (Design Related Information) & WA (Work Authorization)	10	0.042	0.050			0.02	$44.31	$0.02
Validate DRI (Design Related Information) & WA (Work Authorization)	4	0.042	0.950			0.16	$44.31	$0.12
Build/Verify CD (Circuit Detail)	15	0.042	0.200			0.13	$44.31	$0.09

Work Item	Time Minutes	Prob #1	Prob #2	Prob #3	Prob #4	Applied Time (Minutes)	Labor /Hour	Cost
A	B	C	D	E	F	G B * (C Thru F)	H	I H * (G/60)
NEW UNE-P BASIC TRUNKS - OUT-ONLY TRUNK (con't)								
Build/Verify CD (Circuit Detail)	3	0.042	0.800			0.10	$44.31	$0.07
Distribute Documents	2	0.042	1.000			0.08	$44.31	$0.06
TAS	15	0.042	1.000			0.63	$44.31	$0.47
Subtotal - DESIGN SERVICE CENTER - DESIGN						**1.54**		**$1.14**
-DESIGN SERVICE CENTER - IMPLEMENTOR								
PROB #1 = average number per trunk order								
.042 based on average of 24 members								
per group (1/24)								
Screen WFA (Work Force Administration) for circuit	5	0.042				0.21	$43.81	$0.15
Verify LNO (Local Network Operation) completion	5	0.042				0.21	$43.81	$0.15
Notify customer	5	0.042				0.21	$43.81	$0.15
Complete circuit in WFA/C (Work Force Administration - Control Module)	10	0.042				0.42	$43.81	$0.31
Subtotal - DESIGN SERVICE CENTER - IMPLEMENTOR						**1.05**		**$0.77**
-COMPLEX TRANSLATIONS								
PROB #1 = % of time complex translations								
work is required								
Administrative	10	1.000				10.00	$41.45	$6.91
Maintenance	10	1.000				10.00	$41.45	$6.91
Subtotal - COMPLEX TRANSLATIONS						**20.00**		**$13.82**
DISCONNECT								
-INTERCONNECT SERVICE CENTER								
Column 1 = times								
Reviews LSR for completeness and accuracy, validate circuit/trunks belongs to the co-provider								
Receive LSR	3	1.000				3.00	$39.16	$1.96
Verifies existing account (access CSR in BOSS/CARS) and obtains closing bill address if applicable								
Verify existing account	2	1.000				2.00	$39.16	$1.31
Type, review and submit to customer the Firm Order Confirmation (FOC)								
Review FOC	2	1.000				2.00	$39.16	$1.31
Input disconnect order into the service order processor (manually typing and formatting of all order for billing and provisioning)								
Issue service order	10	1.000				10.00	$39.16	$6.53
Customer Request Management (CRM)	3	1.000				3.00	$39.16	$1.96
Ensure order is successfully distributed to the systems and is ready for provisioning								
Service order Analysis & Control (SOAC)	3	1.000				3.00	$39.16	$1.96

NONRECURRING COST DETAIL SUMMARY

Study Name: NONRECURRING ELEMENTS
Study Year: 2002
Analyst: Deffley/Eoriatti
Product Group: Interconnection

ENRC Version: 2.16
Date: 06/03/02

State: South Dakota

Work Item	Time Minutes	Prob #1	Prob #2	Prob #3	Prob #4	Applied Time (Minutes)	Labor /Hour	Cost
A	B	C	D	E	F	G	H	I
						B * (C Thru F)		H * (G/60)
NEW UNE-P BASIC TRUNKS - OUT-ONLY TRUNK (con't)								
Subtotal - INTERCONNECT SERVICE CENTER						**23.00**		**$15.01**
-DESIGN SERVICE CENTER - DESIGN								
PROB #1 = average number per trunk order								
.042 based on average of 24 members								
per group (1/24)								
.05, .95 = % of manual probability								
Order handling/screening	10	0.042	1.000			0.42	$44.31	$0.31
PCList Trunks	2	0.042	1.000			0.08	$44.31	$0.06
Build/validate Work Authorization	5	0.042	0.050			0.01	$44.31	$0.01
Build/validate Work Authorization	2	0.042	0.950			0.08	$44.31	$0.06
Build/Verify CD (Circuit Detail)	10	0.042	0.050			0.02	$44.31	$0.02
Build/Verify CD (Circuit Detail)	2	0.042	0.950			0.08	$44.31	$0.06
Distribute Documents	2	0.042	1.000			0.08	$44.31	$0.06
Subtotal - DESIGN SERVICE CENTER - DESIGN						**0.78**		**$0.58**
-DESIGN SERVICE CENTER - IMPLEMENTOR								
PROB #1 = average number per trunk order								
.042 based on average of 24 members								
per group (1/24)								
Screen WFA (Work Force Administration) for circuit	10	0.042				0.42	$43.81	$0.31
Verify LNO (Local Network Operation) completion	10	0.042				0.42	$43.81	$0.31
Test Circuit	25	0.042				1.05	$43.81	$0.77
Contact Customer	5	0.042				0.21	$43.81	$0.15
Complete circuit in WFA/C (Work Force Administration - Control Module)	10	0.042				0.42	$43.81	$0.31
Subtotal - DESIGN SERVICE CENTER - IMPLEMENTOR						**2.52**		**$1.84**
Total For Service:						**85.89**		**$57.30**

NONRECURRING COST DETAIL SUMMARY

Study Name: NONRECURRING ELEMENTS
Study Year: 2002
Analyst: Deffley/Eoriatti
Product Group: Interconnection

State: South Dakota

	Work Item	Time Minutes	Prob #1	Prob #2	Prob #3	Prob #4	Applied Time (Minutes)	Labor /Hour	Cost
	A	B	C	D	E	F	G	H	I
							B * (C Thru F)		H * (G/60)

NEW UNE-P BASIC TRUNKS - OUT-ONLY TRUNK (con't)

		Cost Calculation		Cost Factor	Cost
		B	C	D	E
24212	**Direct Cost**				$57.30
24213					
24214					
24215					
24216					
24217	***Marketing & Business Fees***				
24218	Product Management Expense	D24218*E24212		0.019957	$1.14
24219	Sales Expense	D24219*E24212		0.011877	$0.68
24220	Product Advertising Expense	D24220*E24212		0.000000	$0.00
24221	Business Fees (Other Operating Taxes)	D24221*Sum(E24212:E24220)		0.001483	$0.09
24222	***Total Marketing & Business Fees***	Sum(E24212:E24221)			$1.91
24223					
24224	***Sub-Total Direct Cost & Marketing***	E24212+E24222			$59.21
24225					
24226	***Other Direct Expenses***				
24227	Network Operations	D24227*E24224		0.034832	$2.06
24228	Network Support Assets	D24228*E24224		0.014703	$0.87
24229	General Support Assets	D24229*E24224		0.088742	$5.25
24230	General Purpose Computers	D24230*E24224		0.043342	$2.57
24231	Uncollectible	D24231*E24224		0.003786	$0.22
24232	Accounting & Finance Expense	D24232*E24224		0.007346	$0.43
24233	Human Resources Expense	D24233*E24224		0.008294	$0.49
24234	Information Management Expense	D24234*E24224		0.070887	$4.20
24235	Intangibles	D24235*E24224		0.000000	$0.00
24236	***Total Other Direct Expenses***	Sum(E24227:E24235)			$16.10
24237					
24238	***TELRIC***	E24227+E24236			$75.31
24239					
24240	***Common***				
24241	Executive Expense	D24241*E24238		0.011267	$0.85
24242	Planning Expense	D24242*E24238		0.000525	$0.04
24243	External Relations Expense	D24243*E24238		0.037846	$2.85
24244	Legal Expense	D24244*E24238		0.004717	$0.36
24245	Other Procurement Expense	D24245*E24238		0.001860	$0.14
24246	Research & Development Expense	D24246*E24238		0.000006	$0.00
24247	Other General and Admin Expense	D24247*E24238		0.015064	$1.13
24248	***Common Costs***	Sum(E24241:E24247)			$5.37
24249					
24250	***TELRIC + Common Costs***	E24238+E24248			$80.68

NONRECURRING COST DETAIL SUMMARY

Study Name: NONRECURRING ELEMENTS
Study Year: 2002
Analyst: Deffley/Eoriatti
Product Group: Interconnection

ENRC Version: 2.16
Date: 06/03/02

State: South Dakota

Work Item	Time Minutes	Prob #1	Prob #2	Prob #3	Prob #4	Applied Time (Minutes)	Labor /Hour	Cost
A	B	C	D	E	F	G	H	I
						B * (C Thru F)		H * (G/60)
NEW UNE-P BASIC TRUNKS - TWO-WAY TRUNK								
ADD								
-INTERCONNECT SERVICE CENTER								
Column 1 = times								
Column 2 = occurrence								
Reviews LSR for completeness and accuracy, contractual entries (analyze request to determine co-provider, type of order and installation option)								
Receive and screen LSR	5	1.000				5.00	$39.16	$3.26
Verifies CFA or facility/circuit availability								
Verify CFA	4	1.000				4.00	$39.16	$2.61
Exchange Info-Obtain Central Office, name, address and office type, Access Telephone Address Guide to obtain the central office address and validate end user address								
Obtain Central Office info	1	1.000				1.00	$39.16	$0.65
CPPD-lookup billing USOCs for co-provider	2	1.000				2.00	$39.16	$1.31
Summary Bill List look up BTN#, tax code and bill date								
Summary bill look up	2	1.000				2.00	$39.16	$1.31
Determine Critical Dates	1	1.000				1.00	$39.16	$0.65
Type, review and submit to customer the Firm Order Confirmation (FOC)								
Review FOC	3	1.000				3.00	$39.16	$1.96
Input order into service order processor (manually typing and formatting of all order for billing and provisioning)								
Issue service order	10	1.000				10.00	$39.16	$6.53
Ensure order is successfully distributed to the systems and is ready for provisioning								
Service order Analysis & Control (SOAC)	3	1.000				3.00	$39.16	$1.96
Includes handling calls from other departments working the order								
Call Handling	5	0.600				3.00	$39.16	$1.96
Handling of problems on the LSR, provisioining issues such as conditioning, facility problems, cable & pair, and typing problems handled by the center								
Error on Service Order (ESOI)	5	0.600				3.00	$39.16	$1.96
Subtotal - INTERCONNECT SERVICE CENTER						**37.00**		**$24.15**
-DESIGN SERVICE CENTER - DESIGN								
PROB #1 = average number per trunk order								
.042 based on average of 24 members per group (1/24)								
.05, .95, .20, .80 = % of manual probability								
Order handling/screening	10	0.042	1.000			0.42	$44.31	$0.31
Validate DRI (Design Related Information) & WA (Work Authorization)	10	0.042	0.050			0.02	$44.31	$0.02
Validate DRI (Design Related Information) & WA (Work Authorization)	4	0.042	0.950			0.16	$44.31	$0.12
Build/Verify CD (Circuit Detail)	15	0.042	0.200			0.13	$44.31	$0.09

Work Item	Time Minutes	Prob #1	Prob #2	Prob #3	Prob #4	Applied Time (Minutes)	Labor /Hour	Cost
A	B	C	D	E	F	G	H	I
						B * (C Thru F)		H * (G/60)
NEW UNE-P BASIC TRUNKS - TWO-WAY TRUNK (con't)								
Build/Verify CD (Circuit Detail)	3	0.042	0.800			0.10	$44.31	$0.07
Distribute Documents	2	0.042	1.000			0.08	$44.31	$0.06
TAS	15	0.042	1.000			0.63	$44.31	$0.47
Subtotal - DESIGN SERVICE CENTER - DESIGN						**1.54**		**$1.14**
-DESIGN SERVICE CENTER - IMPLEMENTOR								
PROB #1 = average number per trunk order								
.042 based on average of 24 members								
per group (1/24).								
Screen WFA (Work Force Administration) for circuit	5	0.042				0.21	$43.81	$0.15
Verify LNO (Local Network Operation) completion	5	0.042				0.21	$43.81	$0.15
Notify customer	5	0.042				0.21	$43.81	$0.15
Complete circuit in WFA/C (Work Force Administration - Control Module)	10	0.042				0.42	$43.81	$0.31
Subtotal - DESIGN SERVICE CENTER - IMPLEMENTOR						**1.05**		**$0.77**
-COMPLEX TRANSLATIONS								
PROB #1 = % of time complex translations								
work is required								
Administrative	10	1.000				10.00	$41.45	$6.91
Maintenance	10	1.000				10.00	$41.45	$6.91
Subtotal - COMPLEX TRANSLATIONS						**20.00**		**$13.82**
DISCONNECT								
-INTERCONNECT SERVICE CENTER								
Column 1 = times								
Reviews LSR for completeness and accuracy, validate circuit/trunks belongs to the co-provider								
Receive LSR	3	1.000				3.00	$39.16	$1.96
Verifies existing account (access CSR in BOSS/CARS) and obtains closing bill address if applicable								
Verify existing account	2	1.000				2.00	$39.16	$1.31
Type, review and submit to customer the Firm Order Confirmation (FOC)								
Review FOC	2	1.000				2.00	$39.16	$1.31
Input disconnect order into the service order processor (manually typing and formatting of all order for billing and provisioning)								
Issue service order	10	1.000				10.00	$39.16	$6.53
Customer Request Management (CRM)	3	1.000				3.00	$39.16	$1.96
Ensure order is successfully distributed to the systems and is ready for provisioning								
Service order Analysis & Control (SOAC)	3	1.000				3.00	$39.16	$1.96

NONRECURRING COST DETAIL SUMMARY

Study Name: NONRECURRING ELEMENTS
Study Year: 2002
Analyst: Deffley/Eoriatti
Product Group: Interconnection

ENRC Version: 2.16
Date: 06/03/02

State: South Dakota

Work Item	Time Minutes	Prob #1	Prob #2	Prob #3	Prob #4	Applied Time (Minutes)	Labor /Hour	Cost
A	B	C	D	E	F	G	H	I
						B * (C Thru F)		H * (G/60)
NEW UNE-P BASIC TRUNKS - TWO-WAY TRUNK (con't)								
Subtotal - INTERCONNECT SERVICE CENTER						**23.00**		**$15.01**
-DESIGN SERVICE CENTER - DESIGN								
PROB #1 = average number per trunk order								
.042 based on average of 24 members								
per group (1/24)								
.05, .95 = % of manual probability								
Order handling/screening	10	0.042	1.000			0.42	$44.31	$0.31
PCList Trunks	2	0.042	1.000			0.08	$44.31	$0.06
Build/validate Work Authorization	5	0.042	0.050			0.01	$44.31	$0.01
Build/validate Work Authorization	2	0.042	0.950			0.08	$44.31	$0.06
Build/Verify CD (Circuit Detail)	10	0.042	0.050			0.02	$44.31	$0.02
Build/Verify CD (Circuit Detail)	2	0.042	0.950			0.08	$44.31	$0.06
Distribute Documents	2	0.042	1.000			0.08	$44.31	$0.06
Subtotal - DESIGN SERVICE CENTER - DESIGN						**0.78**		**$0.58**
-DESIGN SERVICE CENTER - IMPLEMENTOR								
PROB #1 = average number per trunk order								
.042 based on average of 24 members								
per group (1/24).								
Screen WFA (Work Force Administration) for circuit	10	0.042				0.42	$43.81	$0.31
Verify LNO (Local Network Operation) completion	10	0.042				0.42	$43.81	$0.31
Test Circuit	25	0.042				1.05	$43.81	$0.77
Contact Customer	5	0.042				0.21	$43.81	$0.15
Complete circuit in WFA/C (Work Force Administration - Control Module)	10	0.042				0.42	$43.81	$0.31
Subtotal - DESIGN SERVICE CENTER - IMPLEMENTOR						**2.52**		**$1.84**
Total For Service:						**85.89**		**$57.30**

NONRECURRING COST DETAIL SUMMARY

Study Name: NONRECURRING ELEMENTS
Study Year: 2002
Analyst: Deffley/Eoriatti
Product Group: Interconnection

State: South Dakota

	Work Item	Time Minutes	Prob #1	Prob #2	Prob #3	Prob #4	Applied Time (Minutes)	Labor /Hour	Cost
	A	B	C	D	E	F	G	H	I
							B * (C Thru F)		H * (G/60)

NEW UNE-P BASIC TRUNKS - TWO-WAY TRUNK (con't)

24392	**Direct Cost**					$57.30
24393						
24394		Cost Calculation			Cost Factor	Cost
24395		B	C		D	E
24396						
24397	***Marketing & Business Fees***					
24398	Product Management Expense	D24398*E24392			0.019957	$1.14
24399	Sales Expense	D24399*E24392			0.011877	$0.68
24400	Product Advertising Expense	D24400*E24392			0.000000	$0.00
24401	Business Fees (Other Operating Taxes)	D24401*Sum(E24392:E24400)			0.001483	$0.09
24402	***Total Marketing & Business Fees***	Sum(E24392:E24401)				$1.91
24403						
24404	***Sub-Total Direct Cost & Marketing***	E24392+E24402				$59.21
24405						
24406	***Other Direct Expenses***					
24407	Network Operations	D24407*E24404			0.034832	$2.06
24408	Network Support Assets	D24408*E24404			0.014703	$0.87
24409	General Support Assets	D24409*E24404			0.088742	$5.25
24410	General Purpose Computers	D24410*E24404			0.043342	$2.57
24411	Uncollectible	D24411*E24404			0.003786	$0.22
24412	Accounting & Finance Expense	D24412*E24404			0.007346	$0.43
24413	Human Resources Expense	D24413*E24404			0.008294	$0.49
24414	Information Management Expense	D24414*E24404			0.070887	$4.20
24415	Intangibles	D24415*E24404			0.000000	$0.00
24416	***Total Other Direct Expenses***	Sum(E24407:E24415)				$16.10
24417						
24418	***TELRIC***	E24407+E24416				$75.31
24419						
24420	***Common***					
24421	Executive Expense	D24421*E24418			0.011267	$0.85
24422	Planning Expense	D24422*E24418			0.000525	$0.04
24423	External Relations Expense	D24423*E24418			0.037846	$2.85
24424	Legal Expense	D24424*E24418			0.004717	$0.36
24425	Other Procurement Expense	D24425*E24418			0.001860	$0.14
24426	Research & Development Expense	D24426*E24418			0.000006	$0.00
24427	Other General and Admin Expense	D24427*E24418			0.015064	$1.13
24428	***Common Costs***	Sum(E24421:E24427)				$5.37
24429						
24430	***TELRIC + Common Costs***	E24418+E24428				$80.68

NONRECURRING COST DETAIL SUMMARY

Study Name: NONRECURRING ELEMENTS
Study Year: 2002
Analyst: Deffley/Eoriatti
Product Group: Interconnection

ENRC Version: 2.16
Date: 06/03/02

State: South Dakota

Work Item	Time Minutes	Prob #1	Prob #2	Prob #3	Prob #4	Applied Time (Minutes)	Labor /Hour	Cost
A	B	C	D	E	F	G B * (C Thru F)	H	I H * (G/60)
NEW UNE-P DSS ADVANCED TRUNK - IN-ONLY WITH DID AND HUNTING								
ADD								
-INTERCONNECT SERVICE CENTER								
Column 1 = times								
Column 2 = occurrence								
Reviews LSR for completeness and accuracy, contractual entries (analyze request to determine co-provider, type of order and installation option)								
Receive and screen LSR	5	1.000				5.00	$39.16	$3.26
Verifies CFA or facility/circuit availability								
Verify CFA	4	1.000				4.00	$39.16	$2.61
Exchange Info-Obtain Central Office, name, address and office type, Access Telephone Address Guide to obtain the central office address and validate end user address								
Obtain Central Office info	1	1.000				1.00	$39.16	$0.65
CPPD-lookup billing USOCs for co-provider	2	1.000				2.00	$39.16	$1.31
Summary Bill List look up BTN#, tax code and bill date								
Summary bill look up	2	1.000				2.00	$39.16	$1.31
Determine Critical Dates	1	1.000				1.00	$39.16	$0.65
Type, review and submit to customer the Firm Order Confirmation (FOC)								
Review FOC	3	1.000				3.00	$39.16	$1.96
Input order into service order processor (manually typing and formatting of all order for billing and provisioning)								
Issue service order	10	1.000				10.00	$39.16	$6.53
Ensure order is successfully distributed to the systems and is ready for provisioning								
Service order Analysis & Control (SOAC)	3	1.000				3.00	$39.16	$1.96
Includes handling calls from other departments working the order								
Call Handling	5	0.600				3.00	$39.16	$1.96
Handling of problems on the LSR, provisioining issues such as conditioning, facility problems, cable & pair, and typing problems handled by the center								
Error on Service Order (ESOI)	5	0.600				3.00	$39.16	$1.96
Subtotal - INTERCONNECT SERVICE CENTER						**37.00**		**$24.15**
-MECHANIZED PROVISIONING ASGMNT CENTER								
Column 1 = times								
Column 2 = % of activity that requires assignment of multiline hunt group								
Column 3 = average # of lines in a multiline hunt group								
Add term to DSS Trunk Group Multiline Hunt	8	0.980	0.130			1.02	$37.78	$0.64
Assign screen tele number & 1st DSS Adv	6	0.980	0.130			0.76	$37.78	$0.48

Work Item	Time Minutes	Prob #1	Prob #2	Prob #3	Prob #4	Applied Time (Minutes)	Labor /Hour	Cost
A	B	C	D	E	F	G	H	I
						B * (C Thru F)		H * (G/60)
NEW UNE-P DSS ADVANCED TRUNK - IN-ONLY WITH DID AND HUNTING (con't,								
Subtotal - MECHANIZED PROVISIONING ASGMNT CENTER						**1.78**		**$1.12**
-DESIGN SERVICE CENTER - IMPLEMENTOR								
PROB #1 = average number per trunk order								
.042 based on average of 24 members								
per group (1/24)								
Screen WFA (Work Force Administration) for circuit	5	0.042				0.21	$43.81	$0.15
Verify LNO (Local Network Operation) completion	5	0.042				0.21	$43.81	$0.15
Notify customer	5	0.042				0.21	$43.81	$0.15
Complete circuit in WFA/C (Work Force Administration - Control Module)	10	0.042				0.42	$43.81	$0.31
Subtotal - DESIGN SERVICE CENTER - IMPLEMENTOR						**1.05**		**$0.77**
-COMPLEX TRANSLATIONS								
PROB #1 = % of time complex translations								
work is required								
Administrative	10	1.000				10.00	$41.45	$6.91
Maintenance	10	1.000				10.00	$41.45	$6.91
Subtotal - COMPLEX TRANSLATIONS						**20.00**		**$13.82**
DISCONNECT								
-INTERCONNECT SERVICE CENTER								
Column 1 = times								
Reviews LSR for completeness and accuracy, validate circuit/trunks belongs to the co-provider								
Receive LSR	3	1.000				3.00	$39.16	$1.96
Verifies existing account (access CSR in BOSS/CARS) and obtains closing bill address if applicable								
Verify existing account	2	1.000				2.00	$39.16	$1.31
Type, review and submit to customer the Firm Order Confirmation (FOC)								
Review FOC	2	1.000				2.00	$39.16	$1.31
Input disconnect order into the service order processor (manually typing and formatting of all order for billing and provisioning)								
Issue service order	10	1.000				10.00	$39.16	$6.53
Customer Request Management (CRM)	3	1.000				3.00	$39.16	$1.96
Ensure order is successfully distributed to the systems and is ready for provisioning								
Service order Analysis & Control (SOAC)	3	1.000				3.00	$39.16	$1.96
Subtotal - INTERCONNECT SERVICE CENTER						**23.00**		**$15.01**
-DESIGN SERVICE CENTER - IMPLEMENTOR								

NONRECURRING COST DETAIL SUMMARY

Study Name: NONRECURRING ELEMENTS
Study Year: 2002
Analyst: Deffley/Eoriatti
Product Group: Interconnection

ENRC Version: 2.16
Date: 06/03/02

State: South Dakota

Work Item	Time Minutes	Prob #1	Prob #2	Prob #3	Prob #4	Applied Time (Minutes)	Labor /Hour	Cost
A	B	C	D	E	F	G	H	I
						B * (C Thru F)		H * (G/60)
NEW UNE-P DSS ADVANCED TRUNK - IN-ONLY WITH DID AND HUNTING (con't,								
PROB #1 = average number per trunk order .042 based on average of 24 members per group (1/24)								
Screen WFA (Work Force Administration) for circuit	10	0.042				0.42	$43.81	$0.31
Verify LNO (Local Network Operation) completion	10	0.042				0.42	$43.81	$0.31
Test Circuit	25	0.042				1.05	$43.81	$0.77
Contact Customer	5	0.042				0.21	$43.81	$0.15
Complete circuit in WFA/C (Work Force Administration - Control Module)	10	0.042				0.42	$43.81	$0.31
Subtotal - DESIGN SERVICE CENTER - IMPLEMENTOR						**2.52**		**$1.84**
Total For Service:						**85.35**		**$56.71**

NONRECURRING COST DETAIL SUMMARY

Study Name: NONRECURRING ELEMENTS
Study Year: 2002
Analyst: Deffley/Eoriatti
Product Group: Interconnection

State: South Dakota

	Work Item	Time Minutes	Prob #1	Prob #2	Prob #3	Prob #4	Applied Time (Minutes)	Labor /Hour	Cost
	A	B	C	D	E	F	G	H	I
							B * (C Thru F)		H * (G/60)

NEW UNE-P DSS ADVANCED TRUNK - IN-ONLY WITH DID AND HUNTING (con't,

		Cost Calculation		Cost Factor	Cost
		B	C	D	E
24572	**Direct Cost**				$56.71
24573					
24574					
24575					
24576					
24577	***Marketing & Business Fees***				
24578	Product Management Expense	D24578*E24572		0.019957	$1.13
24579	Sales Expense	D24579*E24572		0.011877	$0.67
24580	Product Advertising Expense	D24580*E24572		0.000000	$0.00
24581	Business Fees (Other Operating Taxes)	D24581*Sum(E24572:E24580)		0.001483	$0.09
24582	***Total Marketing & Business Fees***	Sum(E24572:E24581)			$1.89
24583					
24584	***Sub-Total Direct Cost & Marketing***	E24572+E24582			$58.60
24585					
24586	***Other Direct Expenses***				
24587	Network Operations	D24587*E24584		0.034832	$2.04
24588	Network Support Assets	D24588*E24584		0.014703	$0.86
24589	General Support Assets	D24589*E24584		0.088742	$5.20
24590	General Purpose Computers	D24590*E24584		0.043342	$2.54
24591	Uncollectible	D24591*E24584		0.003786	$0.22
24592	Accounting & Finance Expense	D24592*E24584		0.007346	$0.43
24593	Human Resources Expense	D24593*E24584		0.008294	$0.49
24594	Information Management Expense	D24594*E24584		0.070887	$4.15
24595	Intangibles	D24595*E24584		0.000000	$0.00
24596	***Total Other Direct Expenses***	Sum(E24587:E24595)			$15.93
24597					
24598	***TELRIC***	E24587+E24596			$74.53
24599					
24600	***Common***				
24601	Executive Expense	D24601*E24598		0.011267	$0.84
24602	Planning Expense	D24602*E24598		0.000525	$0.04
24603	External Relations Expense	D24603*E24598		0.037846	$2.82
24604	Legal Expense	D24604*E24598		0.004717	$0.35
24605	Other Procurement Expense	D24605*E24598		0.001860	$0.14
24606	Research & Development Expense	D24606*E24598		0.000006	$0.00
24607	Other General and Admin Expense	D24607*E24598		0.015064	$1.12
24608	***Common Costs***	Sum(E24601:E24607)			$5.31
24609					
24610	***TELRIC + Common Costs***	E24598+E24608			$79.85

Work Item	Time Minutes	Prob #1	Prob #2	Prob #3	Prob #4	Applied Time (Minutes)	Labor /Hour	Cost
A	B	C	D	E	F	G B * (C Thru F)	H	I H * (G/60)
NEW UNE-P ADVANCED TRUNKS - OUT-ONLY TRUNK WITH ANSWER SUPERVISION								
ADD								
-INTERCONNECT SERVICE CENTER								
Column 1 = times								
Column 2 = occurrence								
Reviews LSR for completeness and accuracy, contractual entries (analyze request to determine co-provider, type of order and installation option)								
Receive and screen LSR	5	1.000				5.00	$39.16	$3.26
Verifies CFA or facility/circuit availability								
Verify CFA	4	1.000				4.00	$39.16	$2.61
Exchange Info-Obtain Central Office, name, address and office type, Access Telephone Address Guide to obtain the central office address and validate end user address								
Obtain Central Office info	1	1.000				1.00	$39.16	$0.65
CPPD-lookup billing USOCs for co-provider	2	1.000				2.00	$39.16	$1.31
Summary Bill List look up BTN#, tax code and bill date								
Summary bill look up	2	1.000				2.00	$39.16	$1.31
Determine Critical Dates	1	1.000				1.00	$39.16	$0.65
Type, review and submit to customer the Firm Order Confirmation (FOC)								
Review FOC	3	1.000				3.00	$39.16	$1.96
Input order into service order processor (manually typing and formatting of all order for billing and provisioning)								
Issue service order	10	1.000				10.00	$39.16	$6.53
Ensure order is successfully distributed to the systems and is ready for provisioning								
Service order Analysis & Control (SOAC)	3	1.000				3.00	$39.16	$1.96
Includes handling calls from other departments working the order								
Call Handling	5	0.600				3.00	$39.16	$1.96
Handling of problems on the LSR, provisioining issues such as conditioning, facility problems, cable & pair, and typing problems handled by the center								
Error on Service Order (ESOI)	5	0.600				3.00	$39.16	$1.96
Subtotal - INTERCONNECT SERVICE CENTER						**37.00**		**$24.15**
-MECHANIZED PROVISIONING ASGMT CENTER								
COLUMN 1 = TIMES								
Column 2 = % manually handled								
COLUMN 3 = average # of trunks per N & T order								
Assign screen telephone number	6	1.000	0.080			0.48	$37.78	$0.30
Subtotal - MECHANIZED PROVISIONING ASGMT CENTER						**0.48**		**$0.30**

NONRECURRING COST DETAIL SUMMARY

Study Name: NONRECURRING ELEMENTS
Study Year: 2002
Analyst: Deffley/Eoriatti
Product Group: Interconnection

ENRC Version: 2.16
Date: 06/03/02

State: South Dakota

Work Item	Time Minutes	Prob #1	Prob #2	Prob #3	Prob #4	Applied Time (Minutes)	Labor /Hour	Cost
A	B	C	D	E	F	G B * (C Thru F)	H	I H * (G/60)
NEW UNE-P ADVANCED TRUNKS - OUT-ONLY TRUNK WITH ANSWER SUPERVISION (con't)								
-DESIGN SERVICE CENTER - DESIGN								
Subtotal - DESIGN SERVICE CENTER - DESIGN						**0.00**		**$0.00**
-DESIGN SERVICE CENTER - DESIGN								
PROB #1 = average number per trunk order								
.042 based on average of 24 members								
per group (1/24)								
.05, .95, .20, .80 = % of manual probability								
Order handling/screening	10	0.042	1.000			0.42	$44.31	$0.31
Validate DRI (Design Related Information) & WA (Work Authorization)	10	0.042	0.050			0.02	$44.31	$0.02
Validate DRI (Design Related Information) & WA (Work Authorization)	4	0.042	0.950			0.16	$44.31	$0.12
Build/Verify CD (Circuit Detail)	15	0.042	0.200			0.13	$44.31	$0.09
Build/Verify CD (Circuit Detail)	3	0.042	0.800			0.10	$44.31	$0.07
Distribute Documents	2	0.042	1.000			0.08	$44.31	$0.06
TAS	15	0.042	1.000			0.63	$44.31	$0.47
Subtotal - DESIGN SERVICE CENTER - DESIGN						**1.54**		**$1.14**
-DESIGN SERVICE CENTER - IMPLEMENTOR								
PROB #1 = average number per trunk order								
.042 based on average of 24 members								
per group (1/24)								
Screen WFA (Work Force Administration) for circuit	5	0.042				0.21	$43.81	$0.15
Verify LNO (Local Network Operation) completion	5	0.042				0.21	$43.81	$0.15
Notify customer	5	0.042				0.21	$43.81	$0.15
Complete circuit in WFA/C (Work Force Administration - Control Module)	10	0.042				0.42	$43.81	$0.31
Subtotal - DESIGN SERVICE CENTER - IMPLEMENTOR						**1.05**		**$0.77**
-COMPLEX TRANSLATIONS								
PROB #1 = % of time complex translations								
work is required								
Administrative	10	1.000				10.00	$41.45	$6.91
Maintenance	10	1.000				10.00	$41.45	$6.91
Subtotal - COMPLEX TRANSLATIONS						**20.00**		**$13.82**
DISCONNECT								
-INTERCONNECT SERVICE CENTER								
Column 1 = times								
Reviews LSR for completeness and accuracy, validate circuit/trunks belongs to the co-provider								

NONRECURRING COST DETAIL SUMMARY

Study Name: NONRECURRING ELEMENTS
Study Year: 2002
Analyst: Deffley/Eoriatti
Product Group: Interconnection

ENRC Version: 2.16
Date: 06/03/02

State: South Dakota

Work Item	Time Minutes	Prob #1	Prob #2	Prob #3	Prob #4	Applied Time (Minutes)	Labor /Hour	Cost
A	B	C	D	E	F	G B * (C Thru F)	H	I H * (G/60)
NEW UNE-P ADVANCED TRUNKS - OUT-ONLY TRUNK WITH ANSWER SUPERVISION (con't)								
Receive LSR	3	1.000				3.00	$39.16	$1.96
Verifies existing account (access CSR in BOSS/CARS) and obtains closing bill address if applicable								
Verify existing account	2	1.000				2.00	$39.16	$1.31
Type, review and submit to customer the Firm Order Confirmation (FOC)								
Review FOC	2	1.000				2.00	$39.16	$1.31
Input disconnect order into the service order processor (manually typing and formatting of all order for billing and provisioning)								
Issue service order	10	1.000				10.00	$39.16	$6.53
Customer Request Management (CRM)	3	1.000				3.00	$39.16	$1.96
Ensure order is successfully distributed to the systems and is ready for provisioning								
Service order Analysis & Control (SOAC)	3	1.000				3.00	$39.16	$1.96
Subtotal - INTERCONNECT SERVICE CENTER						**23.00**		**$15.01**
-DESIGN SERVICE CENTER - DESIGN								
PROB #1 = average number per trunk order								
.042 based on average of 24 members per group (1/24)								
.05, .95 = % of manual probability								
Order handling/screening	10	0.042	1.000			0.42	$44.31	$0.31
PCList Trunks	2	0.042	1.000			0.08	$44.31	$0.06
Build/validate Work Authorization	5	0.042	0.050			0.01	$44.31	$0.01
Build/validate Work Authorization	2	0.042	0.950			0.08	$44.31	$0.06
Build/Verify CD (Circuit Detail)	10	0.042	0.050			0.02	$44.31	$0.02
Build/Verify CD (Circuit Detail)	2	0.042	0.950			0.08	$44.31	$0.06
Distribute Documents	2	0.042	1.000			0.08	$44.31	$0.06
Subtotal - DESIGN SERVICE CENTER - DESIGN						**0.78**		**$0.58**
-DESIGN SERVICE CENTER - IMPLEMENTOR								
PROB #1 = average number per trunk order								
.042 based on average of 24 members per group (1/24)								
Screen WFA (Work Force Administration) for circuit	10	0.042				0.42	$43.81	$0.31
Verify LNO (Local Network Operation) completion	10	0.042				0.42	$43.81	$0.31
Test Circuit	25	0.042				1.05	$43.81	$0.77
Contact Customer	5	0.042				0.21	$43.81	$0.15
Complete circuit in WFA/C (Work Force Administration - Control Module)	10	0.042				0.42	$43.81	$0.31
Subtotal - DESIGN SERVICE CENTER - IMPLEMENTOR						**2.52**		**$1.84**
Total For Service:						**0.00**		**$0.00**

NONRECURRING COST DETAIL SUMMARY

Study Name: NONRECURRING ELEMENTS
Study Year: 2002
Analyst: Deffley/Eoriatti
Product Group: Interconnection

State: South Dakota

	Work Item	Time Minutes	Prob #1	Prob #2	Prob #3	Prob #4	Applied Time (Minutes)	Labor /Hour	Cost
	A	B	C	D	E	F	G	H	I
							B * (C Thru F)		H * (G/60)

NEW UNE-P ADVANCED TRUNKS - OUT-ONLY TRUNK WITH ANSWER SUPERVISION (con't)

24752	**Direct Cost**				$0.00
24753					
24754		**Cost Calculation**		**Cost Factor**	**Cost**
24755					
24756		**B**	**C**	**D**	**E**
24757	***Marketing & Business Fees***				
24758	Product Management Expense	D24758*E24752		0.019957	$0.02
24759	Sales Expense	D24759*E24752		0.011877	$0.01
24760	Product Advertising Expense	D24760*E24752		0.000000	$0.00
24761	Business Fees (Other Operating Taxes)	D24761*Sum(E24752:E24760)		0.001483	$0.00
24762	***Total Marketing & Business Fees***	Sum(E24752:E24761)			$0.03
24763					
24764	***Sub-Total Direct Cost & Marketing***	E24752+E24762			$1.03
24765					
24766	***Other Direct Expenses***				
24767	Network Operations	D24767*E24764		0.034832	$0.04
24768	Network Support Assets	D24768*E24764		0.014703	$0.02
24769	General Support Assets	D24769*E24764		0.088742	$0.09
24770	General Purpose Computers	D24770*E24764		0.043342	$0.04
24771	Uncollectible	D24771*E24764		0.003786	$0.00
24772	Accounting & Finance Expense	D24772*E24764		0.007346	$0.01
24773	Human Resources Expense	D24773*E24764		0.008294	$0.01
24774	Information Management Expense	D24774*E24764		0.070887	$0.07
24775	Intangibles	D24775*E24764		0.000000	$0.00
24776	***Total Other Direct Expenses***	Sum(E24767:E24775)			$0.28
24777					
24778	***TELRIC***	E24767+E24776			$1.31
24779					
24780	***Common***				
24781	Executive Expense	D24781*E24778		0.011267	$0.01
24782	Planning Expense	D24782*E24778		0.000525	$0.00
24783	External Relations Expense	D24783*E24778		0.037846	$0.05
24784	Legal Expense	D24784*E24778		0.004717	$0.01
24785	Other Procurement Expense	D24785*E24778		0.001860	$0.00
24786	Research & Development Expense	D24786*E24778		0.000006	$0.00
24787	Other General and Admin Expense	D24787*E24778		0.015064	$0.02
24788	***Common Costs***	Sum(E24781:E24787)			$0.09
24789					
24790	***TELRIC + Common Costs***	E24778+E24788			$1.41

Work Item	Time Minutes	Prob #1	Prob #2	Prob #3	Prob #4	Applied Time (Minutes)	Labor /Hour	Cost
A	B	C	D	E	F	G	H	I
						B * (C Thru F)		H * (G/60)
NEW UNE-P ADVANCED TRUNKS - TWO-WAY TRUNK W/DID, HUNTING & ANSWER SUPERVISION								
ADD								
-INTERCONNECT SERVICE CENTER								
Column 1 = times								
Column 2 = occurrence								
Reviews LSR for completeness and accuracy, contractual entries (analyze request to determine co-provider, type of order and installation option)								
Receive and screen LSR	5	1.000				5.00	$39.16	$3.26
Verifies CFA or facility/circuit availability								
Verify CFA	4	1.000				4.00	$39.16	$2.61
Exchange Info-Obtain Central Office, name, address and office type, Access Telephone Address Guide to obtain the central office address and validate end user address								
Obtain Central Office info	1	1.000				1.00	$39.16	$0.65
CPPD-lookup billing USOCs for co-provider	2	1.000				2.00	$39.16	$1.31
Summary Bill List look up BTN#, tax code and bill date								
Summary bill look up	2	1.000				2.00	$39.16	$1.31
Determine Critical Dates	1	1.000				1.00	$39.16	$0.65
Type, review and submit to customer the Firm Order Confirmation (FOC)								
Review FOC	3	1.000				3.00	$39.16	$1.96
Input order into service order processor (manually typing and formatting of all order for billing and provisioning)								
Issue service order	10	1.000				10.00	$39.16	$6.53
Ensure order is successfully distributed to the systems and is ready for provisioning								
Service order Analysis & Control (SOAC)	3	1.000				3.00	$39.16	$1.96
Includes handling calls from other departments working the order								
Call Handling	5	0.600				3.00	$39.16	$1.96
Handling of problems on the LSR, provisioining issues such as conditioning, facility problems, cable & pair, and typing problems handled by the center								
Error on Service Order (ESOI)	5	0.600				3.00	$39.16	$1.96
Subtotal - INTERCONNECT SERVICE CENTER						**37.00**		**$24.15**
-MECHANIZED PROVISIONING ASGMNT CENTER								
COLUMN 1 = times								
COLUMN 2 = % of activity that requires assignment of multiline hunt group								
COLUMN 3 = average # of lines in a multiline hunt group								
Add term to DSS Trunk Group Multiline Hunt	8	0.980	0.130			1.02	$37.78	$0.64
Assign screen tele number & 1st DSS Adv	6	0.980	0.130			0.76	$37.78	$0.48

Study Name: NONRECURRING ELEMENTS
Study Year: 2002
Analyst: Deffley/Eoriatti
Product Group: Interconnection

State: South Dakota

Work Item	Time Minutes	Prob #1	Prob #2	Prob #3	Prob #4	Applied Time (Minutes)	Labor /Hour	Cost
A	B	C	D	E	F	G B * (C Thru F)	H	I H * (G/60)
NEW UNE-P ADVANCED TRUNKS - TWO-WAY TRUNK W/DID, HUNTING & ANSWER SUPERVISION (con't,								
Subtotal - MECHANIZED PROVISIONING ASGMNT CENTER						**1.78**		**$1.12**
-DESIGN SERVICE CENTER - IMPLEMENTOR								
PROB #1 = average number per trunk order								
.042 based on average of 24 members per group (1/24)								
Screen WFA (Work Force Administration) for circuit	5	0.042				0.21	$43.81	$0.15
Verify LNO (Local Network Operation) completion	5	0.042				0.21	$43.81	$0.15
Notify customer	5	0.042				0.21	$43.81	$0.15
Complete circuit in WFA/C (Work Force Administration - Control Module)	10	0.042				0.42	$43.81	$0.31
Subtotal - DESIGN SERVICE CENTER - IMPLEMENTOR						**1.05**		**$0.77**
-COMPLEX TRANSLATIONS								
PROB #1 = % of time complex translations work is required								
Administrative	10	1.000				10.00	$41.45	$6.91
Maintenance	10	1.000				10.00	$41.45	$6.91
Subtotal - COMPLEX TRANSLATIONS						**20.00**		**$13.82**
DISCONNECT								
-INTERCONNECT SERVICE CENTER								
Column 1 = times								
Reviews LSR for completeness and accuracy, validate circuit/trunks belongs to the co-provider								
Receive LSR	3	1.000				3.00	$39.16	$1.96
Verifies existing account (access CSR in BOSS/CARS) and obtains closing bill address if applicable								
Verify existing account	2	1.000				2.00	$39.16	$1.31
Type, review and submit to customer the Firm Order Confirmation (FOC)								
Review FOC	2	1.000				2.00	$39.16	$1.31
Input disconnect order into the service order processor (manually typing and formatting of all order for billing and provisioning)								
Issue service order	10	1.000				10.00	$39.16	$6.53
Customer Request Management (CRM)	3	1.000				3.00	$39.16	$1.96
Ensure order is successfully distributed to the systems and is ready for provisioning								
Service order Analysis & Control (SOAC)	3	1.000				3.00	$39.16	$1.96
Subtotal - INTERCONNECT SERVICE CENTER						**23.00**		**$15.01**
-DESIGN SERVICE CENTER - IMPLEMENTOR								

NONRECURRING COST DETAIL SUMMARY

Study Name: NONRECURRING ELEMENTS
Study Year: 2002
Analyst: Deffley/Eoriatti
Product Group: Interconnection

State: South Dakota

Work Item	Time Minutes	Prob #1	Prob #2	Prob #3	Prob #4	Applied Time (Minutes)	Labor /Hour	Cost
A	B	C	D	E	F	G B * (C Thru F)	H	I H * (G/60)
NEW UNE-P ADVANCED TRUNKS - TWO-WAY TRUNK W/DID, HUNTING & ANSWER SUPERVISION (con't)								
PROB #1 = average number per trunk order .042 based on average of 24 members per group (1/24)								
Screen WFA (Work Force Administration) for circuit	10	0.042				0.42	$43.81	$0.31
Verify LNO (Local Network Operation) completion	10	0.042				0.42	$43.81	$0.31
Test Circuit	25	0.042				1.05	$43.81	$0.77
Contact Customer	5	0.042				0.21	$43.81	$0.15
Complete circuit in WFA/C (Work Force Administration - Control Module)	10	0.042				0.42	$43.81	$0.31
Subtotal - DESIGN SERVICE CENTER - IMPLEMENTOR						**2.52**		**$1.84**
Total For Service:						**85.35**		**$56.71**

NONRECURRING COST DETAIL SUMMARY

Study Name: NONRECURRING ELEMENTS
Study Year: 2002
Analyst: Deffley/Eoriatti
Product Group: Interconnection

State: South Dakota

	Work Item	Time Minutes	Prob #1	Prob #2	Prob #3	Prob #4	Applied Time (Minutes)	Labor /Hour	Cost
	A	B	C	D	E	F	G	H	I
							B * (C Thru F)		H * (G/60)

NEW UNE-P ADVANCED TRUNKS - TWO-WAY TRUNK W/DID, HUNTING & ANSWER SUPERVISION (con't

24932	**Direct Cost**				$56.71
24933					
24934		Cost Calculation		Cost Factor	Cost
24935		B	C	D	E
24936					
24937	***Marketing & Business Fees***				
24938	Product Management Expense	D24938*E24932		0.019957	$1.13
24939	Sales Expense	D24939*E24932		0.011877	$0.67
24940	Product Advertising Expense	D24940*E24932		0.000000	$0.00
24941	Business Fees (Other Operating Taxes)	D24941*Sum(E24932:E24940)		0.001483	$0.09
24942	***Total Marketing & Business Fees***	Sum(E24932:E24941)			$1.89
24943					
24944	***Sub-Total Direct Cost & Marketing***	E24932+E24942			$58.60
24945					
24946	***Other Direct Expenses***				
24947	Network Operations	D24947*E24944		0.034832	$2.04
24948	Network Support Assets	D24948*E24944		0.014703	$0.86
24949	General Support Assets	D24949*E24944		0.088742	$5.20
24950	General Purpose Computers	D24950*E24944		0.043342	$2.54
24951	Uncollectible	D24951*E24944		0.003786	$0.22
24952	Accounting & Finance Expense	D24952*E24944		0.007346	$0.43
24953	Human Resources Expense	D24953*E24944		0.008294	$0.49
24954	Information Management Expense	D24954*E24944		0.070887	$4.15
24955	Intangibles	D24955*E24944		0.000000	$0.00
24956	***Total Other Direct Expenses***	Sum(E24947:E24955)			$15.93
24957					
24958	***TELRIC***	E24947+E24956			$74.53
24959					
24960	***Common***				
24961	Executive Expense	D24961*E24958		0.011267	$0.84
24962	Planning Expense	D24962*E24958		0.000525	$0.04
24963	External Relations Expense	D24963*E24958		0.037846	$2.82
24964	Legal Expense	D24964*E24958		0.004717	$0.35
24965	Other Procurement Expense	D24965*E24958		0.001860	$0.14
24966	Research & Development Expense	D24966*E24958		0.000006	$0.00
24967	Other General and Admin Expense	D24967*E24958		0.015064	$1.12
24968	***Common Costs***	Sum(E24961:E24967)			$5.31
24969					
24970	***TELRIC + Common Costs***	E24958+E24968			$79.85

NONRECURRING COST DETAIL SUMMARY

Study Name: NONRECURRING ELEMENTS
Study Year: 2002
Analyst: Deffley/Eoriatti
Product Group: Interconnection

ENRC Version: 2.16
Date: 06/03/02

State: South Dakota

Work Item	Time Minutes	Prob #1	Prob #2	Prob #3	Prob #4	Applied Time (Minutes)	Labor /Hour	Cost
A	B	C	D	E	F	G	H	I
						B * (C Thru F)		H * (G/60)
NEW UNE-P DEDICATED PRI 23B+D SERVICE CONFIGURATION								
ADD								
-NROC								
PROB #1 = % BY SWITCH TYPE								
PRI INTERFACE GRP PER D CHAN	10	0.660				6.60	$41.45	$4.56
D CHANNEL TRK GROUP	35	0.660				23.10	$41.45	$15.96
PER B CHANNEL TRK GROUP	140	0.660				92.40	$41.45	$63.83
D CHANNEL TRK MEMBER	5	0.660				3.30	$41.45	$2.28
PER B CHANNEL TRK MEMBER	115	0.660				75.90	$41.45	$52.43
PER ROUTE INDEX	45	0.660				29.70	$41.45	$20.52
ALTERNATE RI FOR DATA	45	0.660				29.70	$41.45	$20.52
Subtotal - NROC						**260.70**		**$180.10**
-TRANSLATIONS - INPUT								
PROB #1 = % BY SWITCH TYPE								
PRI INTERFACE GRP PER D CHAN	5	0.660				3.30	$41.45	$2.28
D CHANNEL TRK GROUP	25	0.660				16.50	$41.45	$11.40
PER B CHANNEL TRK GROUP	100	0.660				66.00	$41.45	$45.60
D CHANNEL TRK MEMBER	5	0.660				3.30	$41.45	$2.28
PER B CHANNEL TRK MEMBER	115	0.660				75.90	$41.45	$52.43
PER ROUTE INDEX	30	0.660				19.80	$41.45	$13.68
ALTERNATE RI FOR DATA	30	0.660				19.80	$41.45	$13.68
Subtotal - TRANSLATIONS - INPUT						**204.60**		**$141.34**
DISCONNECT								
-NROC								
PROB #1 = % BY SWITCH TYPE								
PRI INTERFACE GRP PER D CHAN	5	0.660				3.30	$41.45	$2.28
D CHANNEL TRK GROUP	10	0.660				6.60	$41.45	$4.56
PER B CHANNEL TRK GROUP	40	0.660				26.40	$41.45	$18.24
D CHANNEL TRK MEMBER	5	0.660				3.30	$41.45	$2.28
PER B CHANNEL TRK MEMBER	115	0.660				75.90	$41.45	$52.43
PER ROUTE INDEX	15	0.660				9.90	$41.45	$6.84
ALTERNATE RI FOR DATA	15	0.660				9.90	$41.45	$6.84
Subtotal - NROC						**135.30**		**$93.47**
-INPUT								
PROB #1 = % BY SWITCH TYPE								

NONRECURRING COST DETAIL SUMMARY

Study Name: NONRECURRING ELEMENTS
Study Year: 2002
Analyst: Deffley/Eoriatti
Product Group: Interconnection

ENRC Version: 2.16
Date: 06/03/02

State: South Dakota

Work Item	Time Minutes	Prob #1	Prob #2	Prob #3	Prob #4	Applied Time (Minutes)	Labor /Hour	Cost
A	B	C	D	E	F	G	H	I
						B * (C Thru F)		H * (G/60)
NEW UNE-P DEDICATED PRI 23B+D SERVICE CONFIGURATION (con't,								
PRI INTERFACE GRP PER D CHAN	5	0.660				3.30	$41.45	$2.28
D CHANNEL TRK GROUP	5	0.660				3.30	$41.45	$2.28
PER B CHANNEL TRK GROUP	20	0.660				13.20	$41.45	$9.12
D CHANNEL TRK MEMBER	5	0.660				3.30	$41.45	$2.28
PER B CHANNEL TRK MEMBER	115	0.660				75.90	$41.45	$52.43
PER ROUTE INDEX	15	0.660				9.90	$41.45	$6.84
ALTERNATE RI FOR DATA	15	0.660				9.90	$41.45	$6.84
Subtotal - INPUT						**118.80**		**$82.07**
Total For Service:						**719.40**		**$496.99**

NONRECURRING COST DETAIL SUMMARY

Study Name: NONRECURRING ELEMENTS
Study Year: 2002
Analyst: Deffley/Eoriatti
Product Group: Interconnection

ENRC Version: 2.16
Date: 06/03/02

State: South Dakota

	Work Item	Time Minutes	Prob #1	Prob #2	Prob #3	Prob #4	Applied Time (Minutes)	Labor /Hour	Cost
	A	B	C	D	E	F	G	H	I
							B * (C Thru F)		H * (G/60)

NEW UNE-P DEDICATED PRI 23B+D SERVICE CONFIGURATION (con't,

		Cost Calculation		Cost Factor	Cost
		B	C	D	E
25067	**Direct Cost**				$496.99
25068					
25069					
25070					
25071					
25072	***Marketing & Business Fees***				
25073	Product Management Expense	D25073*E25067		0.019957	$9.92
25074	Sales Expense	D25074*E25067		0.011877	$5.90
25075	Product Advertising Expense	D25075*E25067		0.000000	$0.00
25076	Business Fees (Other Operating Taxes)	D25076*Sum(E25067:E25075)		0.001483	$0.76
25077	***Total Marketing & Business Fees***	Sum(E25067:E25076)			$16.58
25078					
25079	***Sub-Total Direct Cost & Marketing***	E25067+E25077			$513.57
25080					
25081	***Other Direct Expenses***				
25082	Network Operations	D25082*E25079		0.034832	$17.89
25083	Network Support Assets	D25083*E25079		0.014703	$7.55
25084	General Support Assets	D25084*E25079		0.088742	$45.58
25085	General Purpose Computers	D25085*E25079		0.043342	$22.26
25086	Uncollectible	D25086*E25079		0.003786	$1.94
25087	Accounting & Finance Expense	D25087*E25079		0.007346	$3.77
25088	Human Resources Expense	D25088*E25079		0.008294	$4.26
25089	Information Management Expense	D25089*E25079		0.070887	$36.41
25090	Intangibles	D25090*E25079		0.000000	$0.00
25091	***Total Other Direct Expenses***	Sum(E25082:E25090)			$139.66
25092					
25093	***TELRIC***	E25082+E25091			$653.22
25094					
25095	***Common***				
25096	Executive Expense	D25096*E25093		0.011267	$7.36
25097	Planning Expense	D25097*E25093		0.000525	$0.34
25098	External Relations Expense	D25098*E25093		0.037846	$24.72
25099	Legal Expense	D25099*E25093		0.004717	$3.08
25100	Other Procurement Expense	D25100*E25093		0.001860	$1.21
25101	Research & Development Expense	D25101*E25093		0.000006	$0.00
25102	Other General and Admin Expense	D25102*E25093		0.015064	$9.84
25103	***Common Costs***	Sum(E25096:E25102)			$46.57
25104					
25105	***TELRIC + Common Costs***	E25093+E25103			$699.79

NONRECURRING COST DETAIL SUMMARY

Study Name: NONRECURRING ELEMENTS
Study Year: 2002
Analyst: Deffley/Eoriatti
Product Group: Interconnection

State: South Dakota

Work Item	Time Minutes	Prob #1	Prob #2	Prob #3	Prob #4	Applied Time (Minutes)	Labor /Hour	Cost
A	B	C	D	E	F	G	H	I
						B * (C Thru F)		H * (G/60)
NEW UNE- P DEDICATED PRI 24B SERVICE CONFIGURATION								
ADD								
-NROC								
PROB #1 = % BY SWITCH TYPE								
PER B CHANNEL TRK GRP	140	0.660				92.40	$41.45	$63.83
PER B CHANNEL TRK MEMBER	120	0.660				79.20	$41.45	$54.71
PER ROUTE INDEX	45	0.660				29.70	$41.45	$20.52
ALTERNATE RI FOR DATA	45	0.660				29.70	$41.45	$20.52
Subtotal - NROC						**231.00**		**$159.58**
-NROC								
PROB #1 = 10% OF CUSTOMERS MAKING CHANGES BEFORE SERVICE ORDER COMPLETED								
PROB #2 = OF THE 10% OF TOTAL CUSTOMERS, 20% ADD B-CHANNEL TRUNK GROUPS AND B-CHANNEL MEMBER CHANGES WHICH IMPACT THE ROUTE INDEX.								
PER B CHANNEL TRK GRP	140	0.100	0.200			2.80	$41.45	$1.93
PER B CHANNEL TRK MEMBER	120	0.100	0.200			2.40	$41.45	$1.66
PER ROUTE INDEX	45	0.100	0.200			0.90	$41.45	$0.62
ALTERNATE RI FOR DATA	45	0.100	0.200			0.90	$41.45	$0.62
Subtotal - NROC						**7.00**		**$4.84**
-INPUT								
PROB #1 = % BY SWITCH TYPE								
PER B CHANNEL TRK GRP	100	0.660				66.00	$41.45	$45.60
PER B CHANNEL TRK MEMBER	120	0.660				79.20	$41.45	$54.71
PER ROUTE INDEX	30	0.660				19.80	$41.45	$13.68
ALTERNATE RI FOR DATA	30	0.660				19.80	$41.45	$13.68
Subtotal - INPUT						**184.80**		**$127.67**
-NROC								
PROB #1 = 10% OF CUSTOMERS MAKING CHANGES BEFORE SERVICE ORDER COMPLETED								
PROB #2 = OF THE 10% OF TOTAL CUSTOMERS, 20% ADD B-CHANNEL TRUNK GROUPS AND B-CHANNEL MEMBER CHANGES WHICH IMPACT THE ROUTE INDEX.								
PER B CHANNEL TRK GRP	100	0.100	0.200			2.00	$41.45	$1.38
PER B CHANNEL TRK MEMBER	120	0.100	0.200			2.40	$41.45	$1.66
PER ROUTE INDEX	30	0.100	0.200			0.60	$41.45	$0.41

Work Item	Time Minutes	Prob #1	Prob #2	Prob #3	Prob #4	Applied Time (Minutes)	Labor /Hour	Cost
A	B	C	D	E	F	G B * (C Thru F)	H	I H * (G/60)
NEW UNE- P DEDICATED PRI 24B SERVICE CONFIGURATION (con't,								
ALTERNATE RI FOR DATA	30	0.100	0.200			0.60	$41.45	$0.41
Subtotal - NROC						**5.60**		**$3.87**
DISCONNECT								
-NROC								
PROB #1 = % BY SWITCH TYPE								
PER B CHANNEL TRK GRP	40	0.660				26.40	$41.45	$18.24
PER B CHANNEL TRK MEMBER	120	0.660				79.20	$41.45	$54.71
PER ROUTE INDEX	15	0.660				9.90	$41.45	$6.84
ALTERNATE RI FOR DATA	15	0.660				9.90	$41.45	$6.84
Subtotal - NROC						**125.40**		**$86.63**
-NROC								
PROB #1 = 10% OF CUSTOMERS MAKING CHANGES BEFORE SERVICE ORDER COMPLETED								
PROB #2 = OF THE 10% OF TOTAL CUSTOMERS, 80% DISCONNECT B-CHANNEL TRUNK GROUPS AND B-CHANNEL MEMBER CHANGES WHICH IMPACT THE ROUTE INDEX.								
PER B CHANNEL TRK GRP	40	0.100	0.800			3.20	$41.45	$2.21
PER B CHANNEL TRK MEMBER	120	0.100	0.800			9.60	$41.45	$6.63
PER ROUTE INDEX	15	0.100	0.800			1.20	$41.45	$0.83
ALTERNATE RI FOR DATA	15	0.100	0.800			1.20	$41.45	$0.83
Subtotal - NROC						**15.20**		**$10.50**
-INPUT								
PROB #1 = % BY SWITCH TYPE								
PER B CHANNEL TRK GRP	20	0.660				13.20	$41.45	$9.12
PER B CHANNEL TRK MEMBER	120	0.660				79.20	$41.45	$54.71
PER ROUTE INDEX	15	0.660				9.90	$41.45	$6.84
ALTERNATE RI FOR DATA	15	0.660				9.90	$41.45	$6.84
NROC								
PROB #1 = 10% OF CUSTOMERS MAKING CHANGES BEFORE SERVICE ORDER COMPLETED								
PROB #2 = OF THE 10% OF TOTAL CUSTOMERS, 80% DISCONNECT B-CHANNEL TRUNK GROUPS AND B-CHANNEL MEMBER CHANGES WHICH IMPACT THE ROUTE INDEX.								
PER B CHANNEL TRK GRP	20	0.100	0.800			1.60	$41.45	$1.11
PER B CHANNEL TRK MEMBER	120	0.100	0.800			9.60	$41.45	$6.63

NONRECURRING COST DETAIL SUMMARY

Study Name: NONRECURRING ELEMENTS
Study Year: 2002
Analyst: Deffley/Eoriatti
Product Group: Interconnection

ENRC Version: 2.16
Date: 06/03/02

State: South Dakota

Work Item	Time Minutes	Prob #1	Prob #2	Prob #3	Prob #4	Applied Time (Minutes)	Labor /Hour	Cost
A	B	C	D	E	F	G	H	I
						B * (C Thru F)		H * (G/60)
NEW UNE- P DEDICATED PRI 24B SERVICE CONFIGURATION (con't,								
PER ROUTE INDEX	15	0.100	0.800			1.20	$41.45	$0.83
ALTERNATE RI FOR DATA	15	0.100	0.800			1.20	$41.45	$0.83
Subtotal - INPUT						**125.80**		**$86.91**
Total For Service:						**694.80**		**$479.99**

NONRECURRING COST DETAIL SUMMARY

Study Name: NONRECURRING ELEMENTS
Study Year: 2002
Analyst: Deffley/Eoriatti
Product Group: Interconnection

State: South Dakota

	Work Item	Time Minutes	Prob #1	Prob #2	Prob #3	Prob #4	Applied Time (Minutes)	Labor /Hour	Cost
	A	B	C	D	E	F	G	H	I
							B * (C Thru F)		H * (G/60)

NEW UNE- P DEDICATED PRI 24B SERVICE CONFIGURATION (con't,

		Cost Calculation		Cost Factor	Cost
		B	C	D	E
25247	**Direct Cost**				$479.99
25248					
25249					
25250					
25251					
25252	***Marketing & Business Fees***				
25253	Product Management Expense	D25253*E25247		0.019957	$9.58
25254	Sales Expense	D25254*E25247		0.011877	$5.70
25255	Product Advertising Expense	D25255*E25247		0.000000	$0.00
25256	Business Fees (Other Operating Taxes)	D25256*Sum(E25247:E25255)		0.001483	$0.73
25257	***Total Marketing & Business Fees***	Sum(E25247:E25256)			$16.01
25258					
25259	***Sub-Total Direct Cost & Marketing***	E25247+E25257			$496.01
25260					
25261	***Other Direct Expenses***				
25262	Network Operations	D25262*E25259		0.034832	$17.28
25263	Network Support Assets	D25263*E25259		0.014703	$7.29
25264	General Support Assets	D25264*E25259		0.088742	$44.02
25265	General Purpose Computers	D25265*E25259		0.043342	$21.50
25266	Uncollectible	D25266*E25259		0.003786	$1.88
25267	Accounting & Finance Expense	D25267*E25259		0.007346	$3.64
25268	Human Resources Expense	D25268*E25259		0.008294	$4.11
25269	Information Management Expense	D25269*E25259		0.070887	$35.16
25270	Intangibles	D25270*E25259		0.000000	$0.00
25271	***Total Other Direct Expenses***	Sum(E25262:E25270)			$134.88
25272					
25273	***TELRIC***	E25262+E25271			$630.89
25274					
25275	***Common***				
25276	Executive Expense	D25276*E25273		0.011267	$7.11
25277	Planning Expense	D25277*E25273		0.000525	$0.33
25278	External Relations Expense	D25278*E25273		0.037846	$23.88
25279	Legal Expense	D25279*E25273		0.004717	$2.98
25280	Other Procurement Expense	D25280*E25273		0.001860	$1.17
25281	Research & Development Expense	D25281*E25273		0.000006	$0.00
25282	Other General and Admin Expense	D25282*E25273		0.015064	$9.50
25283	***Common Costs***	Sum(E25276:E25282)			$44.97
25284					
25285	***TELRIC + Common Costs***	E25273+E25283			$675.86

NONRECURRING COST DETAIL SUMMARY

Study Name: NONRECURRING ELEMENTS
Study Year: 2002
Analyst: Deffley/Eoriatti
Product Group: Interconnection

ENRC Version: 2.16
Date: 06/03/02

State: South Dakota

Work Item	Time Minutes	Prob #1	Prob #2	Prob #3	Prob #4	Applied Time (Minutes)	Labor /Hour	Cost
A	B	C	D	E	F	G	H	I
						B * (C Thru F)		H * (G/60)
NEW UNE- P DED PRI - 23B+BACK UP D CONFIGURATION - 5E								
ADD								
-NROC								
Column 1 = times								
Column 2 = % by switch type								
Per B channel trunk group	140	0.660				92.40	$41.45	$63.83
D Channel trunk member	5	0.660				3.30	$41.45	$2.28
Per B Channel trunk member	115	0.660				75.90	$41.45	$52.43
Per route index	45	0.660				29.70	$41.45	$20.52
Alternate route index for data	45	0.660				29.70	$41.45	$20.52
Subtotal - NROC						**231.00**		**$159.58**
-NROC								
Column 1 = times								
Column 2 = 10% of total customers								
Column 3 = of the 10% of total customers, 20% add b-Channel trunk groups and B-channel member changes which impact the route index								
Per B Channel trunk group	140	0.100	0.200			2.80	$41.45	$1.93
Per B Channel trunk member	115	0.100	0.200			2.30	$41.45	$1.59
Per route index	45	0.100	0.200			0.90	$41.45	$0.62
Alternate route index for data	45	0.100	0.200			0.90	$41.45	$0.62
Subtotal - NROC						**6.90**		**$4.77**
-INPUT								
Column 1 = times								
Column 2 = % by switch type								
Per B channel trunk group	100	0.660				66.00	$41.45	$45.60
D Channel trunk member	5	0.660				3.30	$41.45	$2.28
Per B Channel trunk member	115	0.660				75.90	$41.45	$52.43
Per route index	30	0.660				19.80	$41.45	$13.68
Alternate route index for data	30	0.660				19.80	$41.45	$13.68
Subtotal - INPUT						**184.80**		**$127.67**
-NROC								
Column 1 = times								
Column 2 = 10% of customers making changes before service order completed								
Column 3 = of the 10% of total customers, 20% add b-Channel trunk groups and B-channel member changes which impact the route index								

Work Item	Time Minutes	Prob #1	Prob #2	Prob #3	Prob #4	Applied Time (Minutes)	Labor /Hour	Cost
A	B	C	D	E	F	G B * (C Thru F)	H	I H * (G/60)
NEW UNE- P DED PRI - 23B+BACK UP D CONFIGURATION - 5E (con't,								
Per B Channel trunk group	100	0.100	0.200			2.00	$41.45	$1.38
Per B Channel trunk member	115	0.100	0.200			2.30	$41.45	$1.59
Per route index	30	0.100	0.200			0.60	$41.45	$0.41
Alternate route index for data	30	0.100	0.200			0.60	$41.45	$0.41
Subtotal - NROC						**5.50**		**$3.80**
DISCONNECT								
-NROC								
Column 1 = times								
Column 2 = % by switch type								
Per B channel trunk group	40	0.660				26.40	$41.45	$18.24
D Channel trunk member	5	0.660				3.30	$41.45	$2.28
Per B Channel trunk member	115	0.660				75.90	$41.45	$52.43
Per route index	15	0.660				9.90	$41.45	$6.84
Alternate route index for data	15	0.660				9.90	$41.45	$6.84
Subtotal - NROC						**125.40**		**$86.63**
-NROC								
Column 1 = times								
Column 2 = 10% of customers making changes before service order completed								
Column 3 = of the 10% of total customers, 80% disconnect B-Channel trunk groups and B-Channel member changes which impact the route index.								
Per B channel trunk group	40	0.100	0.800			3.20	$41.45	$2.21
Per B Channel trunk member	115	0.100	0.800			9.20	$41.45	$6.36
Per route index	15	0.100	0.800			1.20	$41.45	$0.83
Alternate route index for data	15	0.100	0.800			1.20	$41.45	$0.83
Subtotal - NROC						**14.80**		**$10.22**
-INPUT								
Column 1 = times								
Column 2 = % by switch type								
Per B Channel trunk group	20	0.660				13.20	$41.45	$9.12
D Channel trunk member	5	0.660				3.30	$41.45	$2.28
Per B Channel trunk member	115	0.660				75.90	$41.45	$52.43
Per route index	15	0.660				9.90	$41.45	$6.84
Alternate route index for data	15	0.660				9.90	$41.45	$6.84
Subtotal - INPUT						**112.20**		**$77.51**

NONRECURRING COST DETAIL SUMMARY

Study Name: NONRECURRING ELEMENTS
Study Year: 2002
Analyst: Deffley/Eoriatti
Product Group: Interconnection

ENRC Version: 2.16
Date: 06/03/02

State: South Dakota

Work Item	Time Minutes	Prob #1	Prob #2	Prob #3	Prob #4	Applied Time (Minutes)	Labor /Hour	Cost
A	B	C	D	E	F	G	H	I
						B * (C Thru F)		H * (G/60)
NEW UNE- P DED PRI - 23B+BACK UP D CONFIGURATION - 5E (con't)								
-NROC								
Column 1 = times								
Column 2 = 10% of customers making changes before service order completed								
Column 3 = of the 10% of total customers, 80% disconnect B-Channel trunk groups and B-Channel member changes which impact the route index.								
Per B Channel trunk group	20	0.100	0.800			1.60	$41.45	$1.11
Per B Channel trunk member	115	0.100	0.800			9.20	$41.45	$6.36
Per route index	15	0.100	0.800			1.20	$41.45	$0.83
Alternate route index for data	15	0.100	0.800			1.20	$41.45	$0.83
Subtotal - NROC						**13.20**		**$9.12**
Total For Service:						**693.80**		**$479.30**

NONRECURRING COST DETAIL SUMMARY

Study Name: NONRECURRING ELEMENTS
Study Year: 2002
Analyst: Deffley/Eoriatti
Product Group: Interconnection

State: South Dakota

	Work Item	Time Minutes	Prob #1	Prob #2	Prob #3	Prob #4	Applied Time (Minutes)	Labor /Hour	Cost
	A	B	C	D	E	F	G	H	I
							B * (C Thru F)		H * (G/60)

NEW UNE- P DED PRI - 23B+BACK UP D CONFIGURATION - 5E (con't)

		Cost Calculation		Cost Factor	Cost
		B	C	D	E
25427	**Direct Cost**				$479.30
25428					
25429					
25430					
25431					
25432	***Marketing & Business Fees***				
25433	Product Management Expense	D25433*E25427		0.019957	$9.57
25434	Sales Expense	D25434*E25427		0.011877	$5.69
25435	Product Advertising Expense	D25435*E25427		0.000000	$0.00
25436	Business Fees (Other Operating Taxes)	D25436*Sum(E25427:E25435)		0.001483	$0.73
25437	***Total Marketing & Business Fees***	Sum(E25427:E25436)			$15.99
25438					
25439	***Sub-Total Direct Cost & Marketing***	E25427+E25437			$495.29
25440					
25441	***Other Direct Expenses***				
25442	Network Operations	D25442*E25439		0.034832	$17.25
25443	Network Support Assets	D25443*E25439		0.014703	$7.28
25444	General Support Assets	D25444*E25439		0.088742	$43.95
25445	General Purpose Computers	D25445*E25439		0.043342	$21.47
25446	Uncollectible	D25446*E25439		0.003786	$1.88
25447	Accounting & Finance Expense	D25447*E25439		0.007346	$3.64
25448	Human Resources Expense	D25448*E25439		0.008294	$4.11
25449	Information Management Expense	D25449*E25439		0.070887	$35.11
25450	Intangibles	D25450*E25439		0.000000	$0.00
25451	***Total Other Direct Expenses***	Sum(E25442:E25450)			$134.69
25452					
25453	***TELRIC***	E25442+E25451			$629.98
25454					
25455	***Common***				
25456	Executive Expense	D25456*E25453		0.011267	$7.10
25457	Planning Expense	D25457*E25453		0.000525	$0.33
25458	External Relations Expense	D25458*E25453		0.037846	$23.84
25459	Legal Expense	D25459*E25453		0.004717	$2.97
25460	Other Procurement Expense	D25460*E25453		0.001860	$1.17
25461	Research & Development Expense	D25461*E25453		0.000006	$0.00
25462	Other General and Admin Expense	D25462*E25453		0.015064	$9.49
25463	***Common Costs***	Sum(E25456:E25462)			$44.91
25464					
25465	***TELRIC + Common Costs***	E25453+E25463			$674.89

NONRECURRING COST DETAIL SUMMARY

Study Name: NONRECURRING ELEMENTS
Study Year: 2002
Analyst: Deffley/Eoriatti
Product Group: Interconnection

State: South Dakota

Work Item	Time Minutes	Prob #1	Prob #2	Prob #3	Prob #4	Applied Time (Minutes)	Labor /Hour	Cost
A	B	C	D	E	F	G B * (C Thru F)	H	I H * (G/60)
NEW UNE-P COMPLEX TRANSLATIONS DIGITS OUTPULSED CHANGE SIGNALING								
ADD								
-ADMINISTRATION								
PER CHANGE SIGNALING								
PROB #1 = % OF TIME THIS PRODUCT REQUIRES COMPLEX TRANSLATION WORK								
TRANSLATIONS - SW1	15	0.660				9.90	$41.45	$6.84
TRANSLATIONS - SW2	15	0.340				5.10	$41.45	$3.52
Subtotal - ADMINISTRATION						**15.00**		**$10.36**
Total For Service:						**15.00**		**$10.36**

NONRECURRING COST DETAIL SUMMARY

Study Name: NONRECURRING ELEMENTS
Study Year: 2002
Analyst: Deffley/Eoriatti
Product Group: Interconnection

State: South Dakota

	Work Item	Time Minutes	Prob #1	Prob #2	Prob #3	Prob #4	Applied Time (Minutes)	Labor /Hour	Cost
	A	B	C	D	E	F	G	H	I
							B * (C Thru F)		H * (G/60)

NEW UNE-P COMPLEX TRANSLATIONS DIGITS OUTPULSED CHANGE SIGNALING (con't)

		Cost Calculation		Cost Factor	Cost
		B	C	D	E
25517	**Direct Cost**				$10.36
25518					
25519					
25520					
25521					
25522	***Marketing & Business Fees***				
25523	Product Management Expense	D25523*E25517		0.019957	$0.21
25524	Sales Expense	D25524*E25517		0.011877	$0.12
25525	Product Advertising Expense	D25525*E25517		0.000000	$0.00
25526	Business Fees (Other Operating Taxes)	D25526*Sum(E25517:E25525)		0.001483	$0.02
25527	***Total Marketing & Business Fees***	Sum(E25517:E25526)			$0.35
25528					
25529	***Sub-Total Direct Cost & Marketing***	E25517+E25527			$10.71
25530					
25531	***Other Direct Expenses***				
25532	Network Operations	D25532*E25529		0.034832	$0.37
25533	Network Support Assets	D25533*E25529		0.014703	$0.16
25534	General Support Assets	D25534*E25529		0.088742	$0.95
25535	General Purpose Computers	D25535*E25529		0.043342	$0.46
25536	Uncollectible	D25536*E25529		0.003786	$0.04
25537	Accounting & Finance Expense	D25537*E25529		0.007346	$0.08
25538	Human Resources Expense	D25538*E25529		0.008294	$0.09
25539	Information Management Expense	D25539*E25529		0.070887	$0.76
25540	Intangibles	D25540*E25529		0.000000	$0.00
25541	***Total Other Direct Expenses***	Sum(E25532:E25540)			$2.91
25542					
25543	***TELRIC***	E25532+E25541			$13.62
25544					
25545	***Common***				
25546	Executive Expense	D25546*E25543		0.011267	$0.15
25547	Planning Expense	D25547*E25543		0.000525	$0.01
25548	External Relations Expense	D25548*E25543		0.037846	$0.52
25549	Legal Expense	D25549*E25543		0.004717	$0.06
25550	Other Procurement Expense	D25550*E25543		0.001860	$0.03
25551	Research & Development Expense	D25551*E25543		0.000006	$0.00
25552	Other General and Admin Expense	D25552*E25543		0.015064	$0.21
25553	***Common Costs***	Sum(E25546:E25552)			$0.97
25554					
25555	***TELRIC + Common Costs***	E25543+E25553			$14.59

NONRECURRING COST DETAIL SUMMARY

Study Name: NONRECURRING ELEMENTS
Study Year: 2002
Analyst: Deffley/Eoriatti
Product Group: Interconnection

ENRC Version: 2.16
Date: 06/03/02

State: South Dakota

Work Item	Time Minutes	Prob #1	Prob #2	Prob #3	Prob #4	Applied Time (Minutes)	Labor /Hour	Cost
A	B	C	D	E	F	G	H	I
						B * (C Thru F)		H * (G/60)
NEW UNE-P DID COMPLEX TRANSLATIONS SIGNALING CHANGE								
ADD								
-ADMINISTRATION								
PER SIGNALING CHANGE								
PROB #1 = % OF TIME PRODUCT REQUIRES COMPLEX TRANSLATION WORK								
TRANSLATIONS - SW1	35	0.660				23.10	$41.45	$15.96
TRANSLATIONS - SW2	35	0.340				11.90	$41.45	$8.22
Subtotal - ADMINISTRATION						**35.00**		**$24.18**
Total For Service:						**35.00**		**$24.18**

NONRECURRING COST DETAIL SUMMARY

Study Name: NONRECURRING ELEMENTS
Study Year: 2002
Analyst: Deffley/Eoriatti
Product Group: Interconnection

State: South Dakota

	Work Item	Time Minutes	Prob #1	Prob #2	Prob #3	Prob #4	Applied Time (Minutes)	Labor /Hour	Cost
	A	B	C	D	E	F	G	H	I
							B * (C Thru F)		H * (G/60)

NEW UNE-P DID COMPLEX TRANSLATIONS SIGNALING CHANGE (con't,

		Cost Calculation		Cost Factor	Cost
		B	C	D	E
25607	**Direct Cost**				$24.18
25608					
25609					
25610					
25611					
25612	***Marketing & Business Fees***				
25613	Product Management Expense	D25613*E25607		0.019957	$0.48
25614	Sales Expense	D25614*E25607		0.011877	$0.29
25615	Product Advertising Expense	D25615*E25607		0.000000	$0.00
25616	Business Fees (Other Operating Taxes)	D25616*Sum(E25607:E25615)		0.001483	$0.04
25617	***Total Marketing & Business Fees***	Sum(E25607:E25616)			$0.81
25618					
25619	***Sub-Total Direct Cost & Marketing***	E25607+E25617			$24.99
25620					
25621	***Other Direct Expenses***				
25622	Network Operations	D25622*E25619		0.034832	$0.87
25623	Network Support Assets	D25623*E25619		0.014703	$0.37
25624	General Support Assets	D25624*E25619		0.088742	$2.22
25625	General Purpose Computers	D25625*E25619		0.043342	$1.08
25626	Uncollectible	D25626*E25619		0.003786	$0.09
25627	Accounting & Finance Expense	D25627*E25619		0.007346	$0.18
25628	Human Resources Expense	D25628*E25619		0.008294	$0.21
25629	Information Management Expense	D25629*E25619		0.070887	$1.77
25630	Intangibles	D25630*E25619		0.000000	$0.00
25631	***Total Other Direct Expenses***	Sum(E25622:E25630)			$6.79
25632					
25633	***TELRIC***	E25622+E25631			$31.78
25634					
25635	***Common***				
25636	Executive Expense	D25636*E25633		0.011267	$0.36
25637	Planning Expense	D25637*E25633		0.000525	$0.02
25638	External Relations Expense	D25638*E25633		0.037846	$1.20
25639	Legal Expense	D25639*E25633		0.004717	$0.15
25640	Other Procurement Expense	D25640*E25633		0.001860	$0.06
25641	Research & Development Expense	D25641*E25633		0.000006	$0.00
25642	Other General and Admin Expense	D25642*E25633		0.015064	$0.48
25643	***Common Costs***	Sum(E25636:E25642)			$2.27
25644					
25645	***TELRIC + Common Costs***	E25633+E25643			$34.05

NONRECURRING COST DETAIL SUMMARY

Study Name: NONRECURRING ELEMENTS
Study Year: 2002
Analyst: Deffley/Eoriatti
Product Group: Interconnection

ENRC Version: 2.16
Date: 06/03/02

State: South Dakota

Work Item	Time Minutes	Prob #1	Prob #2	Prob #3	Prob #4	Applied Time (Minutes)	Labor /Hour	Cost
A	B	C	D	E	F	G B * (C Thru F)	H	I H * (G/60)
NEW UNE-P DID BLOCK COMPROMISE								
ADD								
-INTERCONNECT SERVICE CENTER								
Column 1 = times								
SOA (Service Order Administrator) receives firm LSR (Local Service Request) via fax, screens for fatal rejects and log LSR								
Receive & screen LSR	5	1.000				5.00	$39.16	$3.26
SDC (Service Delivery Coordinator) verifies address, and trunk info from LSR and manually enters the service order into the SOP (Service Order Processor)								
Type order into SOP	10	1.000				10.00	$39.16	$6.53
SDC faxes FOC (Firm Order Confirmation) to the co-provider and logs for tracking								
Fax FOC	2	1.000				2.00	$39.16	$1.31
SDC accesses the order in the SOP and completes it								
Completes order in SOP	5	1.000				5.00	$39.16	$3.26
Subtotal - INTERCONNECT SERVICE CENTER						**22.00**		**$14.36**
-NSAC								
PROB #1 = % OF TIME MANUAL HANDLING BY THE MPAC IS REQUIRED								
HNDL REQ FOR BLK COMPROMISE	6	1.000				6.00	$37.78	$3.78
Subtotal - NSAC						**6.00**		**$3.78**
-RCMAC								
TIME INCLUDED IN DID REQUEST INCLUDES THE FOLLOWING: RUNNING MARCH PAC TRANSACTION, TRANSACTION PRINTING PAC FILE, SORTING PAC FILE BY SWITCH AND DUE DATE, CHANGING TO APPROPRIATE MARCH SWITCH PENDING FILE, ORDER ANALYSIS AND RUNNING ORI TRANSACTION.								
PROB #1 = AVG NUMBER OF LINES (5)								
PROB #2 = % BY SWITCH TYPE								
Prob #3 = % manual handled								
RCMAC FOR SW1	5	0.200	0.660	0.150		0.10	$43.81	$0.07
RCMAC FOR SW2	5	0.200	0.340	0.150		0.05	$43.81	$0.04
Subtotal - RCMAC						**0.15**		**$0.11**
Total For Service:						**28.15**		**$18.25**

NONRECURRING COST DETAIL SUMMARY

Study Name: NONRECURRING ELEMENTS
Study Year: 2002
Analyst: Deffley/Eoriatti
Product Group: Interconnection

State: South Dakota

	Work Item	Time Minutes	Prob #1	Prob #2	Prob #3	Prob #4	Applied Time (Minutes)	Labor /Hour	Cost
	A	B	C	D	E	F	G	H	I
							B * (C Thru F)		H * (G/60)

NEW UNE-P DID BLOCK COMPROMISE ***(con't)***

25697	**Direct Cost**					$18.25
25698						
25699		Cost Calculation			Cost Factor	Cost
25700		B	C		D	E
25701						
25702	***Marketing & Business Fees***					
25703	Product Management Expense	D25703*E25697			0.019957	$0.36
25704	Sales Expense	D25704*E25697			0.011877	$0.22
25705	Product Advertising Expense	D25705*E25697			0.000000	$0.00
25706	Business Fees (Other Operating Taxes)	D25706*Sum(E25697:E25705)			0.001483	$0.03
25707	***Total Marketing & Business Fees***	Sum(E25697:E25706)				$0.61
25708						
25709	***Sub-Total Direct Cost & Marketing***	E25697+E25707				$18.85
25710						
25711	***Other Direct Expenses***					
25712	Network Operations	D25712*E25709			0.034832	$0.66
25713	Network Support Assets	D25713*E25709			0.014703	$0.28
25714	General Support Assets	D25714*E25709			0.088742	$1.67
25715	General Purpose Computers	D25715*E25709			0.043342	$0.82
25716	Uncollectible	D25716*E25709			0.003786	$0.07
25717	Accounting & Finance Expense	D25717*E25709			0.007346	$0.14
25718	Human Resources Expense	D25718*E25709			0.008294	$0.16
25719	Information Management Expense	D25719*E25709			0.070887	$1.34
25720	Intangibles	D25720*E25709			0.000000	$0.00
25721	***Total Other Direct Expenses***	Sum(E25712:E25720)				$5.13
25722						
25723	***TELRIC***	E25712+E25721				$23.98
25724						
25725	***Common***					
25726	Executive Expense	D25726*E25723			0.011267	$0.27
25727	Planning Expense	D25727*E25723			0.000525	$0.01
25728	External Relations Expense	D25728*E25723			0.037846	$0.91
25729	Legal Expense	D25729*E25723			0.004717	$0.11
25730	Other Procurement Expense	D25730*E25723			0.001860	$0.04
25731	Research & Development Expense	D25731*E25723			0.000006	$0.00
25732	Other General and Admin Expense	D25732*E25723			0.015064	$0.36
25733	***Common Costs***	Sum(E25726:E25732)				$1.71
25734						
25735	***TELRIC + Common Costs***	E25723+E25733				$25.69

Study Name: NONRECURRING ELEMENTS
Study Year: 2002
Analyst: Deffley/Eoriatti
Product Group: Interconnection

ENRC Version: 2.16
Date: 06/03/02

State: South Dakota

Work Item	Time Minutes	Prob #1	Prob #2	Prob #3	Prob #4	Applied Time (Minutes)	Labor /Hour	Cost
A	B	C	D	E	F	G B * (C Thru F)	H	I H * (G/60)
NEW UNE-P DID GROUP OF 20 NUMBERS								
ADD								
-INTERCONNECT SERVICE CENTER								
Column 1 = times								
SOA (Service Order Administrator) receives firm LSR (Local Service Request) via fax, screens for fatal rejects and log LSR								
Receive & screen LSR	5	1.000				5.00	$39.16	$3.26
SDC (Service Delivery Coordinator) verifies address, and trunk info from LSR and manually enters the service order into the SOP (Service Order Processor)								
Type order into SOP	10	1.000				10.00	$39.16	$6.53
SDC faxes FOC (Firm Order Confirmation) to the co-provider and logs for tracking								
Fax FOC	2	1.000				2.00	$39.16	$1.31
SDC accesses the order in the SOP and completes it								
Completes order in SOP	5	1.000				5.00	$39.16	$3.26
Subtotal - INTERCONNECT SERVICE CENTER						**22.00**		**$14.36**
-NSAC								
PROB #1 = % OF TIME MANUAL HANDLING BY THE NSAC IS REQUIRED								
PROB #2 = AVERAGE # OF BLOCKS OF 20 DID NUMBERS PER ORDER								
ASSGN BLOCK OF DID # PER TK GP	6	1.000	0.110			0.66	$37.78	$0.42
Subtotal - NSAC						**0.66**		**$0.42**
-RCMAC								
TIME INCLUDED IN DID REQUEST INCLUDES THE FOLLOWING: RUNNING MARCH PAC TRANSACTION, PRINTING PAC FILE, SORTING PAC FILE BY SWITCH AND DUE DATE, CHANGING TO APPROPRIATE MARCH SWITCH PENDING FILE, ORDER ANALYSIS AND RUNNING ORI TRANSACTION.								
PROB #1 = % OF ACTIVITY BY SWITCH TYPE								
Prob #2 = % manual handled								
RCMAC TRANS 20 SEQ DID #'S 5E	10	0.660	0.150			0.99	$43.81	$0.72
RCMAC TRANS 20 SEQ DID #'S DMS	5	0.340	0.150			0.26	$43.81	$0.19
Subtotal - RCMAC						**1.25**		**$0.91**
DISCONNECT								
-INTERCONNECT SERVICE CENTER								
COLUMN 1 = TIMES								
Pre order, Outsourcer receives request for CSR from reseller, accesses CSR								

NONRECURRING COST DETAIL SUMMARY

Study Name: NONRECURRING ELEMENTS
Study Year: 2002
Analyst: Deffley/Eoriatti
Product Group: Interconnection

State: South Dakota

Work Item	Time Minutes	Prob #1	Prob #2	Prob #3	Prob #4	Applied Time (Minutes)	Labor /Hour	Cost
A	B	C	D	E	F	G B * (C Thru F)	H	I H * (G/60)
NEW UNE-P DID GROUP OF 20 NUMBERS (con't)								
via BOSS/CARS database, gathers records & faxes to reseller (SCRM)								
Receive request & Screen LSR	3	1.000				3.00	$39.16	$1.96
Order Screener rreceives frim LSR (via fax) screens for fatal rejects faxes LSR to appropriate center for logging and typing								
Receive & Screen LSR	5	1.000				5.00	$39.16	$3.26
Order Writer using LSR manually enters order in SOP and sends a FOC to the reseller. Logs minimal data in CRM								
Type change of Service provider	5	1.000				5.00	$39.16	$3.26
Subtotal - INTERCONNECT SERVICE CENTER						**13.00**		**$8.48**
-RCMAC								
PROB #1 = % OF ACTIVITY BY SWITCH TYPE								
Prob #2 =% manual handled								
RCMAC TRANS 20 SEQ DID #'S 5E	1	0.660	0.150			0.10	$43.81	$0.07
RCMAC TRANS 20 SEQ DID #'S DMS	1	0.340	0.150			0.05	$43.81	$0.04
Subtotal - RCMAC						**0.15**		**$0.11**
Total For Service:						**37.06**		**$24.28**

NONRECURRING COST DETAIL SUMMARY

Study Name: NONRECURRING ELEMENTS
Study Year: 2002
Analyst: Deffley/Eoriatti
Product Group: Interconnection

State: South Dakota

	Work Item	Time Minutes	Prob #1	Prob #2	Prob #3	Prob #4	Applied Time (Minutes)	Labor /Hour	Cost
	A	B	C	D	E	F	G	H	I
							B * (C Thru F)		H * (G/60)

NEW UNE-P DID GROUP OF 20 NUMBERS ***(con't)***

		Cost Calculation		Cost Factor	Cost
		B	C	D	E
25832	**Direct Cost**				$24.28
25833					
25834					
25835					
25836					
25837	***Marketing & Business Fees***				
25838	Product Management Expense	D25838*E25832		0.019957	$0.48
25839	Sales Expense	D25839*E25832		0.011877	$0.29
25840	Product Advertising Expense	D25840*E25832		0.000000	$0.00
25841	Business Fees (Other Operating Taxes)	D25841*Sum(E25832:E25840)		0.001483	$0.04
25842	***Total Marketing & Business Fees***	Sum(E25832:E25841)			$0.81
25843					
25844	***Sub-Total Direct Cost & Marketing***	E25832+E25842			$25.09
25845					
25846	***Other Direct Expenses***				
25847	Network Operations	D25847*E25844		0.034832	$0.87
25848	Network Support Assets	D25848*E25844		0.014703	$0.37
25849	General Support Assets	D25849*E25844		0.088742	$2.23
25850	General Purpose Computers	D25850*E25844		0.043342	$1.09
25851	Uncollectible	D25851*E25844		0.003786	$0.09
25852	Accounting & Finance Expense	D25852*E25844		0.007346	$0.18
25853	Human Resources Expense	D25853*E25844		0.008294	$0.21
25854	Information Management Expense	D25854*E25844		0.070887	$1.78
25855	Intangibles	D25855*E25844		0.000000	$0.00
25856	***Total Other Direct Expenses***	Sum(E25847:E25855)			$6.82
25857					
25858	***TELRIC***	E25847+E25856			$31.91
25859					
25860	***Common***				
25861	Executive Expense	D25861*E25858		0.011267	$0.36
25862	Planning Expense	D25862*E25858		0.000525	$0.02
25863	External Relations Expense	D25863*E25858		0.037846	$1.21
25864	Legal Expense	D25864*E25858		0.004717	$0.15
25865	Other Procurement Expense	D25865*E25858		0.001860	$0.06
25866	Research & Development Expense	D25866*E25858		0.000006	$0.00
25867	Other General and Admin Expense	D25867*E25858		0.015064	$0.48
25868	***Common Costs***	Sum(E25861:E25867)			$2.27
25869					
25870	***TELRIC + Common Costs***	E25858+E25868			$34.18

NONRECURRING COST DETAIL SUMMARY

Study Name: NONRECURRING ELEMENTS
Study Year: 2002
Analyst: Deffley/Eoriatti
Product Group: Interconnection

ENRC Version: 2.16
Date: 06/03/02

State: South Dakota

Work Item	Time Minutes	Prob #1	Prob #2	Prob #3	Prob #4	Applied Time (Minutes)	Labor /Hour	Cost
A	B	C	D	E	F	G	H	I
						B * (C Thru F)		H * (G/60)
NEW UNE-P DID RESERVE SEQUENTIAL # BLOCK								
ADD								
-INTERCONNECT SERVICE CENTER								
Column 1 = times								
SOA (Service Order Administrator) receives firm LSR (Local Service Request) via fax, screens for fatal rejects and log LSR								
Receive & screen LSR	5	1.000				5.00	$39.16	$3.26
SDC (Service Delivery Coordinator) verifies address, and trunk info from LSR and manually enters the service order into the SOP (Service Order Processor)								
Type order into SOP	10	1.000				10.00	$39.16	$6.53
SDC faxes FOC (Firm Order Confirmation) to the co-provider and logs for tracking								
Fax FOC	2	1.000				2.00	$39.16	$1.31
SDC accesses the order in the SOP and completes it								
Completes order in SOP	5	1.000				5.00	$39.16	$3.26
Subtotal - INTERCONNECT SERVICE CENTER						**22.00**		**$14.36**
-NSAC								
PROB #1 = % OF TIME MANUAL HANDLING BY THE NSAC IS REQUIRED								
ASSGN BLOCK OF DID # PER TK GP	6	1.000				6.00	$37.78	$3.78
Subtotal - NSAC						**6.00**		**$3.78**
Total For Service:						**28.00**		**$18.14**

	Work Item	Time Minutes	Prob #1	Prob #2	Prob #3	Prob #4	Applied Time (Minutes)	Labor /Hour	Cost
	A	B	C	D	E	F	G	H	I
							B * (C Thru F)		H * (G/60)

NEW UNE-P DID RESERVE SEQUENTIAL # BLOCK ***(con't)***

		Cost Calculation		Cost Factor	Cost
		B	C	D	E
25922	**Direct Cost**				$18.14
25923					
25924					
25925					
25926					
25927	***Marketing & Business Fees***				
25928	Product Management Expense	D25928*E25922		0.019957	$0.36
25929	Sales Expense	D25929*E25922		0.011877	$0.22
25930	Product Advertising Expense	D25930*E25922		0.000000	$0.00
25931	Business Fees (Other Operating Taxes)	D25931*Sum(E25922:E25930]		0.001483	$0.03
25932	***Total Marketing & Business Fees***	Sum(E25922:E25931)			$0.61
25933					
25934	***Sub-Total Direct Cost & Marketing***	E25922+E25932			$18.74
25935					
25936	***Other Direct Expenses***				
25937	Network Operations	D25937*E25934		0.034832	$0.65
25938	Network Support Assets	D25938*E25934		0.014703	$0.28
25939	General Support Assets	D25939*E25934		0.088742	$1.66
25940	General Purpose Computers	D25940*E25934		0.043342	$0.81
25941	Uncollectible	D25941*E25934		0.003786	$0.07
25942	Accounting & Finance Expense	D25942*E25934		0.007346	$0.14
25943	Human Resources Expense	D25943*E25934		0.008294	$0.16
25944	Information Management Expense	D25944*E25934		0.070887	$1.33
25945	Intangibles	D25945*E25934		0.000000	$0.00
25946	***Total Other Direct Expenses***	Sum(E25937:E25945)			$5.10
25947					
25948	***TELRIC***	E25937+E25946			$23.84
25949					
25950	***Common***				
25951	Executive Expense	D25951*E25948		0.011267	$0.27
25952	Planning Expense	D25952*E25948		0.000525	$0.01
25953	External Relations Expense	D25953*E25948		0.037846	$0.90
25954	Legal Expense	D25954*E25948		0.004717	$0.11
25955	Other Procurement Expense	D25955*E25948		0.001860	$0.04
25956	Research & Development Expense	D25956*E25948		0.000006	$0.00
25957	Other General and Admin Expense	D25957*E25948		0.015064	$0.36
25958	***Common Costs***	Sum(E25951:E25957)			$1.70
25959					
25960	***TELRIC + Common Costs***	E25948+E25958			$25.54

NONRECURRING COST DETAIL SUMMARY

Study Name: NONRECURRING ELEMENTS
Study Year: 2002
Analyst: Deffley/Eoriatti
Product Group: Interconnection

ENRC Version: 2.16
Date: 06/03/02

State: South Dakota

Work Item	Time Minutes	Prob #1	Prob #2	Prob #3	Prob #4	Applied Time (Minutes)	Labor /Hour	Cost
A	B	C	D	E	F	G B * (C Thru F)	H	I H * (G/60)
NEW UNE-P DID RESERVE NONSEQUENTIAL TN								
ADD								
-INTERCONNECT SERVICE CENTER								
Column 1 = times								
SOA (Service Order Administrator) receives firm LSR (Local Service Request) via fax, screens for fatal rejects and log LSR								
Receive & screen LSR	5	1.000				5.00	$39.16	$3.26
SDC (Service Delivery Coordinator) verifies address, and trunk info from LSR and manually enters the service order into the SOP (Service Order Processor)								
Type order into SOP	10	1.000				10.00	$39.16	$6.53
SDC faxes FOC (Firm Order Confirmation) to the co-provider and logs for tracking								
Fax FOC	2	1.000				2.00	$39.16	$1.31
SDC accesses the order in the SOP and completes it								
Completes order in SOP	5	1.000				5.00	$39.16	$3.26
Subtotal - INTERCONNECT SERVICE CENTER						**22.00**		**$14.36**
-NSAC								
PROB #1 = % OF TIME MANUAL HANDLING BY THE NSAC IS REQUIRED								
RESRV NONSEQ DID # PER #	4	1.000				4.00	$37.78	$2.52
Subtotal - NSAC						**4.00**		**$2.52**
-RCMAC								
PROB #1 = % OF ACTIVITY BY SWITCH TYPE								
Prob #2 = % manual handled								
RCMAC TRANS 20 SEQ DID #'S 5E	0.5	0.660	0.150			0.05	$43.81	$0.04
RCMAC TRANS 20 SEQ DID #'S DMS	0.5	0.340	0.150			0.03	$43.81	$0.02
Subtotal - RCMAC						**0.08**		**$0.05**
Total For Service:						**26.08**		**$16.93**

NONRECURRING COST DETAIL SUMMARY

Study Name: NONRECURRING ELEMENTS
Study Year: 2002
Analyst: Deffley/Eoriatti
Product Group: Interconnection

State: South Dakota

	Work Item	Time Minutes	Prob #1	Prob #2	Prob #3	Prob #4	Applied Time (Minutes)	Labor /Hour	Cost
	A	B	C	D	E	F	G	H	I
							B * (C Thru F)		H * (G/60)

NEW UNE-P DID RESERVE NONSEQUENTIAL TN ***(con't)***

		Cost Calculation		Cost Factor	Cost
		B	C	D	E
26012	**Direct Cost**				$16.93
26013					
26014					
26015					
26016					
26017	***Marketing & Business Fees***				
26018	Product Management Expense	D26018*E26012		0.019957	$0.34
26019	Sales Expense	D26019*E26012		0.011877	$0.20
26020	Product Advertising Expense	D26020*E26012		0.000000	$0.00
26021	Business Fees (Other Operating Taxes)	D26021*Sum(E26012:E26020]		0.001483	$0.03
26022	***Total Marketing & Business Fees***	Sum(E26012:E26021)			$0.56
26023					
26024	***Sub-Total Direct Cost & Marketing***	E26012+E26022			$17.50
26025					
26026	***Other Direct Expenses***				
26027	Network Operations	D26027*E26024		0.034832	$0.61
26028	Network Support Assets	D26028*E26024		0.014703	$0.26
26029	General Support Assets	D26029*E26024		0.088742	$1.55
26030	General Purpose Computers	D26030*E26024		0.043342	$0.76
26031	Uncollectible	D26031*E26024		0.003786	$0.07
26032	Accounting & Finance Expense	D26032*E26024		0.007346	$0.13
26033	Human Resources Expense	D26033*E26024		0.008294	$0.15
26034	Information Management Expense	D26034*E26024		0.070887	$1.24
26035	Intangibles	D26035*E26024		0.000000	$0.00
26036	***Total Other Direct Expenses***	Sum(E26027:E26035]			$4.76
26037					
26038	***TELRIC***	E26027+E26036			$22.26
26039					
26040	***Common***				
26041	Executive Expense	D26041*E26038		0.011267	$0.25
26042	Planning Expense	D26042*E26038		0.000525	$0.01
26043	External Relations Expense	D26043*E26038		0.037846	$0.84
26044	Legal Expense	D26044*E26038		0.004717	$0.10
26045	Other Procurement Expense	D26045*E26038		0.001860	$0.04
26046	Research & Development Expense	D26046*E26038		0.000006	$0.00
26047	Other General and Admin Expense	D26047*E26038		0.015064	$0.34
26048	***Common Costs***	Sum(E26041:E26047)			$1.59
26049					
26050	***TELRIC + Common Costs***	E26038+E26048			$23.84

NONRECURRING COST DETAIL SUMMARY

Study Name: NONRECURRING ELEMENTS
Study Year: 2002
Analyst: Deffley/Eoriatti
Product Group: Interconnection

ENRC Version: 2.16
Date: 06/03/02

State: South Dakota

Work Item	Time Minutes	Prob #1	Prob #2	Prob #3	Prob #4	Applied Time (Minutes)	Labor /Hour	Cost
A	B	C	D	E	F	G	H	I
						B * (C Thru F)		H * (G/60)
NEW UNE-P DID TRUNK TERMINATIONS								
ADD								
-INTERCONNECT SERVICE CENTER								
Column 1 = times								
SOA (Service Order Administrator) receives firm LSR (Local Service Request) via fax, screens for fatal rejects and log LSR								
Receive & screen LSR	5	1.000				5.00	$39.16	$3.26
SDC (Service Delivery Coordinator) verifies address, and trunk info from LSR and manually enters the service order into the SOP (Service Order Processor)								
Type order into SOP	10	1.000				10.00	$39.16	$6.53
SDC faxes FOC (Firm Order Confirmation) to the co-provider and logs for tracking								
Fax FOC	2	1.000				2.00	$39.16	$1.31
SDC accesses the order in the SOP and completes it								
Completes order in SOP	5	1.000				5.00	$39.16	$3.26
Subtotal - INTERCONNECT SERVICE CENTER						**22.00**		**$14.36**
-DESIGN SERVICE CENTER - DESIGN								
PROB #1 = average number per trunk order .042 based on average of 24 members per group (1/24)								
.05, .95, .20, .80 = % of manual probability								
Order handling/screening	10	0.042	1.000			0.42	$44.31	$0.31
Validate DRI (Design Related Information) & WA (Work Authorization)	10	0.042	0.050			0.02	$44.31	$0.02
Validate DRI (Design Related Information) & WA (Work Authorization)	4	0.042	0.950			0.16	$44.31	$0.12
Build/Verify CD (Circuit Detail)	15	0.042	0.200			0.13	$44.31	$0.09
Build/Verify CD (Circuit Detail)	3	0.042	0.800			0.10	$44.31	$0.07
Distribute Documents	2	0.042	1.000			0.08	$44.31	$0.06
TAS	15	0.042	1.000			0.63	$44.31	$0.47
Subtotal - DESIGN SERVICE CENTER - DESIGN						**1.54**		**$1.14**
-DESIGN SERVICE CENTER - IMPLEMENTOR								
PROB #1 = % of orders manually handled by the Implementor Center								
PROB #2 = .042 based on average of 24 members per group (1/24)								
Screen WFA (Work Force Administration for circuit	10	1.000	0.042			0.42	$43.81	$0.31
Verify LNO (Local Network Organization) (CO) completoin	10	1.000	0.042			0.42	$43.81	$0.31
Test Circuit	15	1.000	0.042			0.63	$43.81	$0.46
NOTIFY CUSTOMER	5	1.000	0.042			0.21	$43.81	$0.15

CONTINUATION

[56]

NONRECURRING COST DETAIL SUMMARY

Study Name: NONRECURRING ELEMENTS
Study Year: 2002
Analyst: Deffley/Eoriatti
Product Group: Interconnection

State: South Dakota

Work Item	Time Minutes	Prob #1	Prob #2	Prob #3	Prob #4	Applied Time (Minutes)	Labor /Hour	Cost
A	B	C	D	E	F	G B * (C Thru F)	H	I H * (G/60)
NEW UNE-P DID TRUNK TERMINATIONS (con't)								
Complete Circuit in WFA Control	10	1.000	0.042			0.42	$43.81	$0.31
Subtotal - DESIGN SERVICE CENTER - IMPLEMENTOR						**2.10**		**$1.53**
DISCONNECT								
-INTERCONNECT SERVICE CENTER								
Column 1 = times								
Pre order, Outsourcer receives request for CSR from reseller, accesses CSR via BOSS/CARS database, gathers records & faxes to reseller (SCRM)								
Receive request & Screen LSR	3	1.000				3.00	$39.16	$1.96
Order Screener rreceives frim LSR (via fax) screens for fatal rejects faxes LSR to appropriate center for logging and typing								
Receive & Screen LSR	5	1.000				5.00	$39.16	$3.26
Order Writer using LSR manually enters order in SOP and sends a FOC to the reseller. Logs minimal data in CRM								
Type change of Service provider	5	1.000				5.00	$39.16	$3.26
Subtotal - INTERCONNECT SERVICE CENTER						**13.00**		**$8.48**
-DESIGN SERVICE CENTER - DESIGN								
PROB #1 = average number per trunk order								
.042 based on average of 24 members per group (1/24)								
.05, .95 = % of manual probability								
Order handling/screening	10	0.042	1.000			0.42	$44.31	$0.31
PCList Trunks	2	0.042	1.000			0.08	$44.31	$0.06
Build/validate Work Authorization	5	0.042	0.050			0.01	$44.31	$0.01
Build/validate Work Authorization	2	0.042	0.950			0.08	$44.31	$0.06
Build/Verify CD (Circuit Detail)	10	0.042	0.050			0.02	$44.31	$0.02
Build/Verify CD (Circuit Detail)	2	0.042	0.950			0.08	$44.31	$0.06
Distribute Documents	2	0.042	1.000			0.08	$44.31	$0.06
Subtotal - DESIGN SERVICE CENTER - DESIGN						**0.78**		**$0.58**
-DESIGN SERVICE CENTER - IMPLEMENTOR								
PROB #1 = % of orders manually handled by the Implementor Center								
Screen WFA (Work Force Administration for circuit	5	1.000				5.00	$43.81	$3.65
Contact Customer	5	1.000				5.00	$43.81	$3.65
Complete Circuit in WFA Control	5	1.000				5.00	$43.81	$3.65
Subtotal - DESIGN SERVICE CENTER - IMPLEMENTOR						**15.00**		**$10.95**

NONRECURRING COST DETAIL SUMMARY

Study Name: NONRECURRING ELEMENTS
Study Year: 2002
Analyst: Deffley/Eoriatti
Product Group: Interconnection

ENRC Version: 2.16
Date: 06/03/02

State: South Dakota

Work Item	Time Minutes	Prob #1	Prob #2	Prob #3	Prob #4	Applied Time (Minutes)	Labor /Hour	Cost
A	B	C	D	E	F	G B * (C Thru F)	H	I H * (G/60)
NEW UNE-P DID TRUNK TERMINATIONS ***(con't)***								
Total For Service:						**54.42**		**$37.04**

NONRECURRING COST DETAIL SUMMARY

Study Name: NONRECURRING ELEMENTS
Study Year: 2002
Analyst: Deffley/Eoriatti
Product Group: Interconnection

State: South Dakota

	Work Item	Time Minutes	Prob #1	Prob #2	Prob #3	Prob #4	Applied Time (Minutes)	Labor /Hour	Cost
	A	B	C	D	E	F	G	H	I
							B * (C Thru F)		H * (G/60)

NEW UNE-P DID TRUNK TERMINATIONS ***(con't)***

		Cost Calculation		Cost Factor	Cost
		B	C	D	E
26192	**Direct Cost**				$37.04
26193					
26194					
26195					
26196					
26197	***Marketing & Business Fees***				
26198	Product Management Expense	D26198*E26192		0.019957	$0.74
26199	Sales Expense	D26199*E26192		0.011877	$0.44
26200	Product Advertising Expense	D26200*E26192		0.000000	$0.00
26201	Business Fees (Other Operating Taxes)	D26201*Sum(E26192:E26200)		0.001483	$0.06
26202	***Total Marketing & Business Fees***	Sum(E26192:E26201)			$1.24
26203					
26204	***Sub-Total Direct Cost & Marketing***	E26192+E26202			$38.28
26205					
26206	***Other Direct Expenses***				
26207	Network Operations	D26207*E26204		0.034832	$1.33
26208	Network Support Assets	D26208*E26204		0.014703	$0.56
26209	General Support Assets	D26209*E26204		0.088742	$3.40
26210	General Purpose Computers	D26210*E26204		0.043342	$1.66
26211	Uncollectible	D26211*E26204		0.003786	$0.14
26212	Accounting & Finance Expense	D26212*E26204		0.007346	$0.28
26213	Human Resources Expense	D26213*E26204		0.008294	$0.32
26214	Information Management Expense	D26214*E26204		0.070887	$2.71
26215	Intangibles	D26215*E26204		0.000000	$0.00
26216	***Total Other Direct Expenses***	Sum(E26207:E26215)			$10.41
26217					
26218	***TELRIC***	E26207+E26216			$48.69
26219					
26220	***Common***				
26221	Executive Expense	D26221*E26218		0.011267	$0.55
26222	Planning Expense	D26222*E26218		0.000525	$0.03
26223	External Relations Expense	D26223*E26218		0.037846	$1.84
26224	Legal Expense	D26224*E26218		0.004717	$0.23
26225	Other Procurement Expense	D26225*E26218		0.001860	$0.09
26226	Research & Development Expense	D26226*E26218		0.000006	$0.00
26227	Other General and Admin Expense	D26227*E26218		0.015064	$0.73
26228	***Common Costs***	Sum(E26221:E26227)			$3.47
26229					
26230	***TELRIC + Common Costs***	E26218+E26228			$52.16

NONRECURRING COST DETAIL SUMMARY

Study Name: NONRECURRING ELEMENTS
Study Year: 2002
Analyst: Deffley/Eoriatti
Product Group: Interconnection

ENRC Version: 2.16
Date: 06/03/02

State: South Dakota

Work Item	Time Minutes	Prob #1	Prob #2	Prob #3	Prob #4	Applied Time (Minutes)	Labor /Hour	Cost
A	B	C	D	E	F	G	H	I
						B * (C Thru F)		H * (G/60)
NEW UNE-P DID NONSEQUENTIAL TELEPHONE NUMBERS								
ADD								
-INTERCONNECT SERVICE CENTER								
Column 1 = times								
SOA (Service Order Administrator) receives firm LSR (Local Service Request) via fax, screens for fatal rejects and log LSR								
Receive & screen LSR	5	1.000				5.00	$39.16	$3.26
SDC (Service Delivery Coordinator) verifies address, and trunk info from LSR and manually enters the service order into the SOP (Service Order Processor)								
Type order into SOP	10	1.000				10.00	$39.16	$6.53
SDC faxes FOC (Firm Order Confirmation) to the co-provider and logs for tracking								
Fax FOC	2	1.000				2.00	$39.16	$1.31
SDC accesses the order in the SOP and completes it								
Completes order in SOP	5	1.000				5.00	$39.16	$3.26
Subtotal - INTERCONNECT SERVICE CENTER						**22.00**		**$14.36**
-NSAC								
PROB #1 = % OF TIME MANUAL HANDLING BY THE NSAC IS REQUIRED								
ASSGN NONSEQ DID # PER #	4	1.000				4.00	$37.78	$2.52
Subtotal - NSAC						**4.00**		**$2.52**
-RCMAC								
PROB #1 = % BY SWITCH TYPE								
Prob #2 = % manual handled								
RCMAC TRANS DID NUMBER - 5E	0.5	0.660	0.150			0.05	$43.81	$0.04
RCMAC TRANS DID NUMBER - DMS	0.5	0.340	0.150			0.03	$43.81	$0.02
Subtotal - RCMAC						**0.08**		**$0.05**
DISCONNECT								
-INTERCONNECT SERVICE CENTER								
COLUMN 1 = TIMES								
Pre order, Outsourcer receives request for CSR from reseller, accesses CSR via BOSS/CARS database, gathers records & faxes to reseller (SCRM)								
Receive request & Screen LSR	3	1.000				3.00	$39.16	$1.96
Order Screener rreceives frim LSR (via fax) screens for fatal rejects faxes LSR to appropriate center for logging and typing								

NONRECURRING COST DETAIL SUMMARY

Study Name: NONRECURRING ELEMENTS
Study Year: 2002
Analyst: Deffley/Eoriatti
Product Group: Interconnection

ENRC Version: 2.16
Date: 06/03/02

State: South Dakota

Work Item	Time Minutes	Prob #1	Prob #2	Prob #3	Prob #4	Applied Time (Minutes)	Labor /Hour	Cost
A	B	C	D	E	F	G B * (C Thru F)	H	I H * (G/60)
NEW UNE-P DID NONSEQUENTIAL TELEPHONE NUMBERS (con't)								
Receive & Screen LSR	5	1.000				5.00	$39.16	$3.26
Order Writer using LSR manually enters order in SOP and sends a FOC to the reseller. Logs minimal data in CRM								
Type change of Service provider	5	1.000				5.00	$39.16	$3.26
Subtotal - INTERCONNECT SERVICE CENTER						**13.00**		**$8.48**
-RCMAC								
PROB #1 = % BY SWITCH TYPE								
Prob #2 = % manual handled								
RCMAC TRANS DID NUMBER - 5E	0.5	0.660	0.150			0.05	$43.81	$0.04
RCMAC TRANS DID NUMBER - DMS	0.5	0.340	0.150			0.03	$43.81	$0.02
Subtotal - RCMAC						**0.08**		**$0.05**
Total For Service:						**39.15**		**$25.47**

	Work Item	Time Minutes	Prob #1	Prob #2	Prob #3	Prob #4	Applied Time (Minutes)	Labor /Hour	Cost
	A	B	C	D	E	F	G	H	I
							B * (C Thru F)		H * (G/60)

NEW UNE-P DID NONSEQUENTIAL TELEPHONE NUMBERS (con't)

26327	**Direct Cost**					$25.47
26328						
26329		Cost Calculation			Cost Factor	Cost
26330		B		C	D	E
26331						
26332	***Marketing & Business Fees***					
26333	Product Management Expense	D26333*E26327			0.019957	$0.51
26334	Sales Expense	D26334*E26327			0.011877	$0.30
26335	Product Advertising Expense	D26335*E26327			0.000000	$0.00
26336	Business Fees (Other Operating Taxes)	D26336*Sum(E26327:E26335)			0.001483	$0.04
26337	***Total Marketing & Business Fees***	Sum(E26327:E26336)				$0.85
26338						
26339	***Sub-Total Direct Cost & Marketing***	E26327+E26337				$26.32
26340						
26341	***Other Direct Expenses***					
26342	Network Operations	D26342*E26339			0.034832	$0.92
26343	Network Support Assets	D26343*E26339			0.014703	$0.39
26344	General Support Assets	D26344*E26339			0.088742	$2.34
26345	General Purpose Computers	D26345*E26339			0.043342	$1.14
26346	Uncollectible	D26346*E26339			0.003786	$0.10
26347	Accounting & Finance Expense	D26347*E26339			0.007346	$0.19
26348	Human Resources Expense	D26348*E26339			0.008294	$0.22
26349	Information Management Expense	D26349*E26339			0.070887	$1.87
26350	Intangibles	D26350*E26339			0.000000	$0.00
26351	***Total Other Direct Expenses***	Sum(E26342:E26350)				$7.16
26352						
26353	***TELRIC***	E26342+E26351				$33.48
26354						
26355	***Common***					
26356	Executive Expense	D26356*E26353			0.011267	$0.38
26357	Planning Expense	D26357*E26353			0.000525	$0.02
26358	External Relations Expense	D26358*E26353			0.037846	$1.27
26359	Legal Expense	D26359*E26353			0.004717	$0.16
26360	Other Procurement Expense	D26360*E26353			0.001860	$0.06
26361	Research & Development Expense	D26361*E26353			0.000006	$0.00
26362	Other General and Admin Expense	D26362*E26353			0.015064	$0.50
26363	***Common Costs***	Sum(E26356:E26362)				$2.39
26364						
26365	***TELRIC + Common Costs***	E26353+E26363				$35.87

NONRECURRING COST DETAIL SUMMARY

Study Name: NONRECURRING ELEMENTS
Study Year: 2002
Analyst: Deffley/Eoriatti
Product Group: Interconnection

State: South Dakota

Work Item	Time Minutes	Prob #1	Prob #2	Prob #3	Prob #4	Applied Time (Minutes)	Labor /Hour	Cost
A	B	C	D	E	F	G	H	I
						B * (C Thru F)		H * (G/60)
NEW UNE- P COMPLEX TRANS FOR TRUNKSIDE TERMINATION								
ADD								
-COMPLEX TRANSLATIONS DMS ESTABLISH TRUNK GROUPS								
PROB #1 = .042 based on average of 24 members per trunk group (1/24)								
PROB #2 = % BY SWITCH TYPE								
ADMIN TRUNK GROUP DMS	65	0.042	0.340			0.93	$41.45	$0.64
MAINT TRUNK GROUP DMS	40	0.042	0.340			0.57	$41.45	$0.39
Subtotal - COMPLEX TRANSLATIONS DMS ESTABLISH TRUNK GROUPS						**1.50**		**$1.04**
- COMPLEX TRANSLATIONS DMS PER TRUNK								
PROB#1 = % OF TIME THIS PRODUCT REQUIRES COMPLEX TRANSLATION WORK								
PROB #2 = % BY SWITCH TYPE								
ADMIN PER TRUNK DMS	5	1.000	0.340			1.70	$41.45	$1.17
MAINT PER TRUNK DMS	115	1.000	0.340			39.10	$41.45	$27.01
Subtotal - COMPLEX TRANSLATIONS DMS PER TRUNK						**40.80**		**$28.19**
- COMPLEX TRANSLATIONS 5E ESTABLISH TRUNK GROUPS								
PROB #1 = .042 based on average of 24 members per trunk group (1/24)								
PROB #2 = % BY SWITCH TYPE								
ADMIN TRUNK GROUP 5E	35	0.042	0.660			0.97	$41.45	$0.67
MAINT TRUNK GROUP 5E	50	0.042	0.660			1.39	$41.45	$0.96
Subtotal - COMPLEX TRANSLATIONS 5E ESTABLISH TRUNK GROUPS						**2.36**		**$1.63**
- COMPLEX TRANSLATIONS 5E PER TRUNK								
PROB #1 = % OF TIME THIS PRODUCT REQUIRES COMPLEX TRANSLATION WORK								
PROB #2 = % BY SWITCH TYPE								
ADMIN PER TRUNK 5E	5	1.000	0.660			3.30	$41.45	$2.28
MAINT PER TRUNK 5E	150	1.000	0.660			99.00	$41.45	$68.39
Subtotal - COMPLEX TRANSLATIONS 5E PER TRUNK						**102.30**		**$70.67**
- COMPLEX TRANSLATIONS 5E PER CUSTOMER								
PROB #1 = AVG NUMBER OF TRUNK GROUPS PER CUSTOMER								
PROB #2 = % BY SWITCH TYPE								
ADMIN PER CUSTOMER 5E	5	0.100	0.660			0.33	$41.45	$0.23
MAINT PER CUSTOMER 5E	10	0.100	0.660			0.66	$41.45	$0.46
Subtotal - COMPLEX TRANSLATIONS 5E PER CUSTOMER						**0.99**		**$0.68**

NONRECURRING COST DETAIL SUMMARY

Study Name: NONRECURRING ELEMENTS
Study Year: 2002
Analyst: Deffley/Eoriatti
Product Group: Interconnection

ENRC Version: 2.16
Date: 06/03/02

State: South Dakota

Work Item	Time Minutes	Prob #1	Prob #2	Prob #3	Prob #4	Applied Time (Minutes)	Labor /Hour	Cost
A	B	C	D	E	F	G	H	I
						B * (C Thru F)		H * (G/60)
NEW UNE- P COMPLEX TRANS FOR TRUNKSIDE TERMINATION (con't)								
Total For Service:						**147.95**		**$102.21**

NONRECURRING COST DETAIL SUMMARY

Study Name: NONRECURRING ELEMENTS
Study Year: 2002
Analyst: Deffley/Eoriatti
Product Group: Interconnection

ENRC Version: 2.16
Date: 06/03/02

State: South Dakota

	Work Item	Time Minutes	Prob #1	Prob #2	Prob #3	Prob #4	Applied Time (Minutes)	Labor /Hour	Cost
	A	B	C	D	E	F	G	H	I
							B * (C Thru F)		H * (G/60)
	NEW UNE- P COMPLEX TRANS FOR TRUNKSIDE TERMINATION (con't,								
26462	**Direct Cost**								$102.21
26463									
26464		**Cost Calculation**					**Cost Factor**		**Cost**
26465									
26466		**B**		**C**			**D**		**E**
26467	***Marketing & Business Fees***								
26468	Product Management Expense	**D26468*E26462**					0.019957		$2.04
26469	Sales Expense	**D26469*E26462**					0.011877		$1.21
26470	Product Advertising Expense	**D26470*E26462**					0.000000		$0.00
26471	Business Fees (Other Operating Taxes)	**D26471*Sum(E26462:E26470)**					0.001483		$0.16
26472	***Total Marketing & Business Fees***	**Sum(E26462:E26471)**							$3.41
26473									
26474	***Sub-Total Direct Cost & Marketing***	**E26462+E26472**							$105.62
26475									
26476	***Other Direct Expenses***								
26477	Network Operations	**D26477*E26474**					0.034832		$3.68
26478	Network Support Assets	**D26478*E26474**					0.014703		$1.55
26479	General Support Assets	**D26479*E26474**					0.088742		$9.37
26480	General Purpose Computers	**D26480*E26474**					0.043342		$4.58
26481	Uncollectible	**D26481*E26474**					0.003786		$0.40
26482	Accounting & Finance Expense	**D26482*E26474**					0.007346		$0.78
26483	Human Resources Expense	**D26483*E26474**					0.008294		$0.88
26484	Information Management Expense	**D26484*E26474**					0.070887		$7.49
26485	Intangibles	**D26485*E26474**					0.000000		$0.00
26486	***Total Other Direct Expenses***	**Sum(E26477:E26485)**							$28.72
26487									
26488	***TELRIC***	**E26477+E26486**							$134.34
26489									
26490	***Common***								
26491	Executive Expense	**D26491*E26488**					0.011267		$1.51
26492	Planning Expense	**D26492*E26488**					0.000525		$0.07
26493	External Relations Expense	**D26493*E26488**					0.037846		$5.08
26494	Legal Expense	**D26494*E26488**					0.004717		$0.63
26495	Other Procurement Expense	**D26495*E26488**					0.001860		$0.25
26496	Research & Development Expense	**D26496*E26488**					0.000006		$0.00
26497	Other General and Admin Expense	**D26497*E26488**					0.015064		$2.02
26498	***Common Costs***	**Sum(E26491:E26497)**							$9.58
26499									
26500	***TELRIC + Common Costs***	**E26488+E26498**							$143.91

NONRECURRING COST DETAIL SUMMARY

Study Name: NONRECURRING ELEMENTS
Study Year: 2002
Analyst: Deffley/Eoriatti
Product Group: Interconnection

State: South Dakota

ENRC Version: 2.16
Date: 06/03/02

Work Item	Time Minutes	Prob #1	Prob #2	Prob #3	Prob #4	Applied Time (Minutes)	Labor /Hour	Cost
A	B	C	D	E	F	G	H	I
						B * (C Thru F)		H * (G/60)
UNE-COMBINATION LMC-LOOP DS0 FIRST								
ADD								
-INTERCONNECT SERVICE CENTER								
.6 probability is percent of time this activity will occur.								
Review LSR for completeness and accuracy, contractual entries	3	1.000				3.00	$40.03	$2.00
Verify Connecting Facility Assignment (CFA) for facility/circuit availability	1	1.000				1.00	$40.03	$0.67
Exchange info, obtain CO, name, address, office type. Access Telephone Address Guide to obta	4	1.000				4.00	$40.03	$2.67
CPPD look-up billing USOC's for co-provider	2	1.000				2.00	$40.03	$1.33
Summary Bill List-Look up Billing Telephone Number, tax code, and bill date	2	1.000				2.00	$40.03	$1.33
Determine critical dates	1	1.000				1.00	$40.03	$0.67
Populate required fields	3	1.000				3.00	$40.03	$2.00
Type, review and submit to customer the Firm Order Confirmation (FOC)	3	1.000				3.00	$40.03	$2.00
Input order into service order processor. Type and format order for billing and provisioning	10	1.000				10.00	$40.03	$6.67
Ensure order is successfully distributed to the systems and is ready for provisioning	3	1.000				3.00	$40.03	$2.00
Handle calls from other departments working the order	5	0.600				3.00	$40.03	$2.00
Handle issues including conditioning, facility, cable&pair	5	0.600				3.00	$40.03	$2.00
Subtotal - INTERCONNECT SERVICE CENTER						**38.00**		**$25.35**
-LOOP PROVISIONING CENTER (LPC)								
.4 weighting is probability a Loop order will fall out for manual assistance.								
Clear RMA (Request for manual assistance)	11.25	0.400				4.50	$37.78	$2.83
Subtotal - LOOP PROVISIONING CENTER (LPC)						**4.50**		**$2.83**
-DESIGN								
Probabilities are % manual work required.								
Order handling/screening	5	0.200				1.00	$44.31	$0.74
GOC (Generic Order Control) order log	6	0.200				1.20	$44.31	$0.89
Enter WA (Work Authorization) mask	5	0.100				0.50	$44.31	$0.37
Prepare loop input/DRI (Design Related Information)	10	0.200				2.00	$44.31	$1.48
Circuit design	20	0.100				2.00	$44.31	$1.48
Distribute WORD (Work Order Record Detail) document	2	0.050				0.10	$44.31	$0.07
Subtotal - DESIGN						**6.80**		**$5.02**
-CO								
ANALYZE ORDER	5	1.000				5.00	$43.81	$3.65
1 JUMPER	4	1.000				4.00	$43.81	$2.92
TEST CIRCUIT	15	1.000				15.00	$43.81	$10.95
COMPLETE IN WFA-DI	2	1.000				2.00	$43.81	$1.46
COMPLETE ORDER WITH CCT-I	3	1.000				3.00	$43.81	$2.19

Work Item	Time Minutes	Prob #1	Prob #2	Prob #3	Prob #4	Applied Time (Minutes)	Labor /Hour	Cost
A	B	C	D	E	F	G B * (C Thru F)	H	I H * (G/60)
UNE-COMBINATION LMC-LOOP DS0 FIRST (con't)								
Subtotal - CO						**29.00**		**$21.17**
-LOAD RESOURCE ADMINISTRATION CENTER (LRAC)								
Screen order	2	1.000				2.00	$37.78	$1.26
Load work request to technician	5	1.000				5.00	$37.78	$3.15
Close out work request with technician	3	1.000				3.00	$37.78	$1.89
Subtotal - LOAD RESOURCE ADMINISTRATION CENTER (LRAC,						**10.00**		**$6.30**
-INSTALLATION/FIELD TECHNICIAN								
Travel to end user premises	21	1.000				21.00	$42.68	$14.94
0.2 probability is percent of time access/sac point work required.								
Complete AP/SAC (Access Point/Serving Area Connection) Point wiring	13	0.200				2.60	$42.68	$1.85
Contact CCT-I (Customer Communication Technician-Implementor) to work orde	3	1.000				3.00	$42.68	$2.13
Complete performance/conformance testing	15	1.000				15.00	$42.68	$10.67
Report test results to CCT-I (Customer Communication Technician-Implementor)	2	1.000				2.00	$42.68	$1.42
Contact LRAC (Load Resource Administration Center) to close orde	3	1.000				3.00	$42.68	$2.13
Subtotal - INSTALLATION/FIELD TECHNICIAN						**46.60**		**$33.15**
-SERVICE DELIVERY IMPLEMENTOR								
Screen WFA (Work Force Administration) for circuit	15	1.000				15.00	$43.81	$10.95
Verify LNO (Local Network Operation) completion	10	1.000				10.00	$43.81	$7.30
Complete performance testing	15	1.000				15.00	$43.81	$10.95
Notify customer/co-provider of work completion	5	1.000				5.00	$43.81	$3.65
Post order complete in WFA/C (Work Force Administration - Control Module)	10	1.000				10.00	$43.81	$7.30
Subtotal - SERVICE DELIVERY IMPLEMENTOR						**55.00**		**$40.16**
DISCONNECT								
-INTERCONNECT SERVICE CENTER								
Review LSR for completeness and accuracy, contractual entries	3	1.000				3.00	$40.03	$2.00
Verify existing account (access CSR in BOSS/CARS) and obtain closing bill address.	2	1.000				2.00	$40.03	$1.33
Type, review and submit to customer the Firm Order Confirmation (FOC)	2	1.000				2.00	$40.03	$1.33
Input order into service order processor. Type and format order for billing and provisioning	10	1.000				10.00	$40.03	$6.67
Populate required fields	3	1.000				3.00	$40.03	$2.00
Ensure order is successfully distributed to the systems and is ready for provisioning	3	1.000				3.00	$40.03	$2.00
Subtotal - INTERCONNECT SERVICE CENTER						**23.00**		**$15.34**
-DESIGN								
Probabilities are % manual work required.								

NONRECURRING COST DETAIL SUMMARY

Study Name: NONRECURRING ELEMENTS
Study Year: 2002
Analyst: Deffley/Eoriatti
Product Group: Interconnection

ENRC Version: 2.16
Date: 06/03/02

State: South Dakota

Work Item	Time Minutes	Prob #1	Prob #2	Prob #3	Prob #4	Applied Time (Minutes)	Labor /Hour	Cost
A	B	C	D	E	F	G B * (C Thru F)	H	I H * (G/60)
UNE-COMBINATION LMC-LOOP DS0 FIRST (con't)								
Order handling/screening	5	0.100				0.50	$44.31	$0.37
GOC (Generic Order Control) order log	6	0.100				0.60	$44.31	$0.44
Enter WA (Work Authorization) mask	5	0.100				0.50	$44.31	$0.37
Disconnect circuit	5	0.100				0.50	$44.31	$0.37
Distribute WORD (Work Order Record Detail) document	2	0.050				0.10	$44.31	$0.07
Subtotal - DESIGN						**2.20**		**$1.62**
-CO								
ANALYZE ORDER	5	1.000				5.00	$43.81	$3.65
DISABLE CIRCUIT	2	1.000				2.00	$43.81	$1.46
DISC JUMPER	2.3	1.000				2.30	$43.81	$1.68
COMPLETE ORDER IN WFA-DI	2	1.000				2.00	$43.81	$1.46
Subtotal - CO						**11.30**		**$8.25**
-SERVICE DELIVERY IMPLEMENTOR								
Screen WFA (Work Force Administration) for circuit	5	1.000				5.00	$43.81	$3.65
Contact customer	5	1.000				5.00	$43.81	$3.65
Complete circuit in WFA/C (Work Force Administration - Control Module)	5	1.000				5.00	$43.81	$3.65
Subtotal - SERVICE DELIVERY IMPLEMENTOR						**15.00**		**$10.95**
Total For Service:						**241.40**		**$170.16**

NONRECURRING COST DETAIL SUMMARY

Study Name: NONRECURRING ELEMENTS
Study Year: 2002
Analyst: Deffley/Eoriatti
Product Group: Interconnection

State: South Dakota

	Work Item	Time Minutes	Prob #1	Prob #2	Prob #3	Prob #4	Applied Time (Minutes)	Labor /Hour	Cost
	A	B	C	D	E	F	G	H	I
							B * (C Thru F)		H * (G/60)

UNE-COMBINATION LMC-LOOP DS0 FIRST (con't)

26642	**Direct Cost**					$170.16
26643						
26644		Cost Calculation			Cost Factor	Cost
26645						
26646		B	C		D	E
26647	***Marketing & Business Fees***					
26648	Product Management Expense	D26648*E26642			0.019957	$3.40
26649	Sales Expense	D26649*E26642			0.011877	$2.02
26650	Product Advertising Expense	D26650*E26642			0.000000	$0.00
26651	Business Fees (Other Operating Taxes)	D26651*Sum(E26642:E26650)			0.001483	$0.26
26652	***Total Marketing & Business Fees***	Sum(E26642:E26651)				$5.68
26653						
26654	***Sub-Total Direct Cost & Marketing***	E26642+E26652				$175.84
26655						
26656	***Other Direct Expenses***					
26657	Network Operations	D26657*E26654			0.034832	$6.12
26658	Network Support Assets	D26658*E26654			0.014703	$2.59
26659	General Support Assets	D26659*E26654			0.088742	$15.60
26660	General Purpose Computers	D26660*E26654			0.043342	$7.62
26661	Uncollectible	D26661*E26654			0.003786	$0.67
26662	Accounting & Finance Expense	D26662*E26654			0.007346	$1.29
26663	Human Resources Expense	D26663*E26654			0.008294	$1.46
26664	Information Management Expense	D26664*E26654			0.070887	$12.46
26665	Intangibles	D26665*E26654			0.000000	$0.00
26666	***Total Other Direct Expenses***	Sum(E26657:E26665)				$47.82
26667						
26668	***TELRIC***	E26657+E26666				$223.65
26669						
26670	***Common***					
26671	Executive Expense	D26671*E26668			0.011267	$2.52
26672	Planning Expense	D26672*E26668			0.000525	$0.12
26673	External Relations Expense	D26673*E26668			0.037846	$8.46
26674	Legal Expense	D26674*E26668			0.004717	$1.06
26675	Other Procurement Expense	D26675*E26668			0.001860	$0.42
26676	Research & Development Expense	D26676*E26668			0.000006	$0.00
26677	Other General and Admin Expense	D26677*E26668			0.015064	$3.37
26678	***Common Costs***	Sum(E26671:E26677)				$15.94
26679						
26680	***TELRIC + Common Costs***	E26668+E26678				$239.60

NONRECURRING COST DETAIL SUMMARY

Study Name: NONRECURRING ELEMENTS
Study Year: 2002
Analyst: Deffley/Eoriatti
Product Group: Interconnection

State: South Dakota

Work Item	Time Minutes	Prob #1	Prob #2	Prob #3	Prob #4	Applied Time (Minutes)	Labor /Hour	Cost
A	B	C	D	E	F	G B * (C Thru F)	H	I H * (G/60)
UNE-COMBINATION LMC-LOOP DS0 EACH ADDITIONAL								
ADD								
-INTERCONNECT SERVICE CENTER								
.6 probability is percent of time this activity will occur.								
Verify Connecting Facility Assignment (CFA) for facility/circuit availability	1	1.000				1.00	$40.03	$0.67
Populate required fields	3	1.000				3.00	$40.03	$2.00
Input order into service order processor. Type and format order for billing and provisioning	5	1.000				5.00	$40.03	$3.34
Ensure order is successfully distributed to the systems and is ready for provisioning	3	1.000				3.00	$40.03	$2.00
Handle calls from other departments working the order	1	0.600				0.60	$40.03	$0.40
Handle issues including conditioning, facility, cable&pair	1	0.600				0.60	$40.03	$0.40
Subtotal - INTERCONNECT SERVICE CENTER						**13.20**		**$8.81**
-LOOP PROVISIONING CENTER (LPC)								
.4 weighting is probability a Loop order will fall out for manual assistance.								
Clear RMA (Request for manual assistance)	11.25	0.400				4.50	$37.78	$2.83
Subtotal - LOOP PROVISIONING CENTER (LPC)						**4.50**		**$2.83**
-DESIGN								
Probabilities are % manual work required. Reciprocal is mechanization rate.								
Order handling/screening	5	0.200				1.00	$44.31	$0.74
GOC (Generic Order Control) order log	6	0.200				1.20	$44.31	$0.89
Enter WA (Work Authorization) mask	5	0.100				0.50	$44.31	$0.37
Prepare loop input/DRI (Design Related Information)	10	0.200				2.00	$44.31	$1.48
Circuit design	20	0.100				2.00	$44.31	$1.48
Distribute WORD (Work Order Record Detail) document	2	0.050				0.10	$44.31	$0.07
Subtotal - DESIGN						**6.80**		**$5.02**
-CO								
ANALYZE ORDER	5	1.000				5.00	$43.81	$3.65
1 JUMPER	4	1.000				4.00	$43.81	$2.92
TEST CIRCUIT	15	1.000				15.00	$43.81	$10.95
COMPLETE IN WFA-DI	2	1.000				2.00	$43.81	$1.46
COMPLETE ORDER WITH CCT-I	3	1.000				3.00	$43.81	$2.19
Subtotal - CO						**29.00**		**$21.17**
-LOAD RESOURCE ADMINISTRATION CENTER (LRAC)								
Screen order	2	1.000				2.00	$37.78	$1.26
Load work request to technician	5	1.000				5.00	$37.78	$3.15

NONRECURRING COST DETAIL SUMMARY

Study Name: NONRECURRING ELEMENTS
Study Year: 2002
Analyst: Deffley/Eoriatti
Product Group: Interconnection

State: South Dakota

Work Item	Time Minutes	Prob #1	Prob #2	Prob #3	Prob #4	Applied Time (Minutes)	Labor /Hour	Cost
A	B	C	D	E	F	G B * (C Thru F)	H	I H * (G/60)
UNE-COMBINATION LMC-LOOP DS0 EACH ADDITIONAL (con't,								
Close out work request with technician	3	1.000				3.00	$37.78	$1.89
Subtotal - LOAD RESOURCE ADMINISTRATION CENTER (LRAC,						**10.00**		**$6.30**
-INSTALLATION/FIELD TECHNICIAN								
0.2 probability is percent of time access/sac point work required.								
Complete AP/SAC (Access Point/Serving Area Connection) Point wiring	13	0.200				2.60	$42.68	$1.85
Complete performance/conformance testing	15	1.000				15.00	$42.68	$10.67
Report test results to CCT-I (Customer Communication Technician-Implementor)	2	1.000				2.00	$42.68	$1.42
Contact LRAC (Load Resource Administration Center) to close order	1	1.000				1.00	$42.68	$0.71
Subtotal - INSTALLATION/FIELD TECHNICIAN						**20.60**		**$14.65**
-SERVICE DELIVERY IMPLEMENTOR								
Screen WFA (Work Force Administration) for circuit	15	1.000				15.00	$43.81	$10.95
Verify LNO (Local Network Operation) completion	10	1.000				10.00	$43.81	$7.30
Complete performance testing	15	1.000				15.00	$43.81	$10.95
Complete circuit in WFA/C (Work Force Administration - Control Module)	10	1.000				10.00	$43.81	$7.30
Subtotal - SERVICE DELIVERY IMPLEMENTOR						**50.00**		**$36.51**
DISCONNECT								
-INTERCONNECT SERVICE CENTER								
Populate required fields	3	1.000				3.00	$40.03	$2.00
Input order into service order processor. Type and format order for billing and provisioning	5	1.000				5.00	$40.03	$3.34
Ensure order is successfully distributed to the systems and is ready for provisioning	3	1.000				3.00	$40.03	$2.00
Subtotal - INTERCONNECT SERVICE CENTER						**11.00**		**$7.34**
-DESIGN								
Probabilities are % manual work required.								
Order handling/screening	5	0.100				0.50	$44.31	$0.37
GOC (Generic Order Control) order log	6	0.100				0.60	$44.31	$0.44
Enter WA (Work Authorization) mask	5	0.100				0.50	$44.31	$0.37
Disconnect circuit	5	0.100				0.50	$44.31	$0.37
Distribute WORD (Work Order Record Detail) document	2	0.050				0.10	$44.31	$0.07
Subtotal - DESIGN						**2.20**		**$1.62**
-CENTRAL OFFICE FRAMES								
Analyze order	5	1.000				5.00	$43.81	$3.65
Remove cross-connect	2.3	1.000				2.30	$43.81	$1.68

NONRECURRING COST DETAIL SUMMARY

Study Name: NONRECURRING ELEMENTS
Study Year: 2002
Analyst: Deffley/Eoriatti
Product Group: Interconnection

ENRC Version: 2.16
Date: 06/03/02

State: South Dakota

Work Item	Time Minutes	Prob #1	Prob #2	Prob #3	Prob #4	Applied Time (Minutes)	Labor /Hour	Cost
A	B	C	D	E	F	G B * (C Thru F)	H	I H * (G/60)
UNE-COMBINATION LMC-LOOP DS0 EACH ADDITIONAL (con't,								
Complete work request in WFA-DI (Work Force Administration - Dispatch In Module)	2	1.000				2.00	$43.81	$1.46
Subtotal - CENTRAL OFFICE FRAMES						**9.30**		**$6.79**
Total For Service:						**156.60**		**$111.05**

NONRECURRING COST DETAIL SUMMARY

Study Name: NONRECURRING ELEMENTS
Study Year: 2002
Analyst: Deffley/Eoriatti
Product Group: Interconnection

State: South Dakota

	Work Item	Time Minutes	Prob #1	Prob #2	Prob #3	Prob #4	Applied Time (Minutes)	Labor /Hour	Cost
	A	B	C	D	E	F	G	H	I
							B * (C Thru F)		H * (G/60)

UNE-COMBINATION LMC-LOOP DS0 EACH ADDITIONAL (con't,

		Cost Calculation		Cost Factor	Cost
		B	C	D	E
26822	**Direct Cost**				$111.05
26823					
26824					
26825					
26826					
26827	***Marketing & Business Fees***				
26828	Product Management Expense	D26828*E26822		0.019957	$2.22
26829	Sales Expense	D26829*E26822		0.011877	$1.32
26830	Product Advertising Expense	D26830*E26822		0.000000	$0.00
26831	Business Fees (Other Operating Taxes)	D26831*Sum(E26822:E26830)		0.001483	$0.17
26832	***Total Marketing & Business Fees***	Sum(E26822:E26831)			$3.71
26833					
26834	***Sub-Total Direct Cost & Marketing***	E26822+E26832			$114.75
26835					
26836	***Other Direct Expenses***				
26837	Network Operations	D26837*E26834		0.034832	$4.00
26838	Network Support Assets	D26838*E26834		0.014703	$1.69
26839	General Support Assets	D26839*E26834		0.088742	$10.18
26840	General Purpose Computers	D26840*E26834		0.043342	$4.97
26841	Uncollectible	D26841*E26834		0.003786	$0.43
26842	Accounting & Finance Expense	D26842*E26834		0.007346	$0.84
26843	Human Resources Expense	D26843*E26834		0.008294	$0.95
26844	Information Management Expense	D26844*E26834		0.070887	$8.13
26845	Intangibles	D26845*E26834		0.000000	$0.00
26846	***Total Other Direct Expenses***	Sum(E26837:E26845)			$31.21
26847					
26848	***TELRIC***	E26837+E26846			$145.96
26849					
26850	***Common***				
26851	Executive Expense	D26851*E26848		0.011267	$1.64
26852	Planning Expense	D26852*E26848		0.000525	$0.08
26853	External Relations Expense	D26853*E26848		0.037846	$5.52
26854	Legal Expense	D26854*E26848		0.004717	$0.69
26855	Other Procurement Expense	D26855*E26848		0.001860	$0.27
26856	Research & Development Expense	D26856*E26848		0.000006	$0.00
26857	Other General and Admin Expense	D26857*E26848		0.015064	$2.20
26858	***Common Costs***	Sum(E26851:E26857)			$10.40
26859					
26860	***TELRIC + Common Costs***	E26848+E26858			$156.36

NONRECURRING COST DETAIL SUMMARY

Study Name: NONRECURRING ELEMENTS
Study Year: 2002
Analyst: Deffley/Eoriatti
Product Group: Interconnection

State: South Dakota

Work Item	Time Minutes	Prob #1	Prob #2	Prob #3	Prob #4	Applied Time (Minutes)	Labor /Hour	Cost
A	B	C	D	E	F	G	H	I
						B * (C Thru F)		H * (G/60)
UNE-COMBINATION LMC-LOOP DS1 FIRST								
ADD								
-INTERCONNECT SERVICE CENTER								
.6 probability is percent of time this activity will occur.								
Review LSR for completeness and accuracy, contractual entries	3	1.000				3.00	$40.03	$2.00
Verify Connecting Facility Assignment (CFA) for facility/circuit availability	1	1.000				1.00	$40.03	$0.67
Exchange info, obtain CO, name, address, office type. Access Telephone Address Guide to obta	4	1.000				4.00	$40.03	$2.67
CPPD look-up billing USOC's for co-provider	2	1.000				2.00	$40.03	$1.33
Summary Bill List-Look up Billing Telephone Number, tax code, and bill date	2	1.000				2.00	$40.03	$1.33
Determine critical dates	1	1.000				1.00	$40.03	$0.67
Populate required fields	3	1.000				3.00	$40.03	$2.00
Type, review and submit to customer the Firm Order Confirmation (FOC)	3	1.000				3.00	$40.03	$2.00
Input order into service order processor. Type and format order for billing and provisioning	10	1.000				10.00	$40.03	$6.67
Ensure order is successfully distributed to the systems and is ready for provisioning	3	1.000				3.00	$40.03	$2.00
Handle calls from other departments working the order	5	0.600				3.00	$40.03	$2.00
Handle issues including conditioning, facility, cable&pair	5	0.600				3.00	$40.03	$2.00
Subtotal - INTERCONNECT SERVICE CENTER						**38.00**		**$25.35**
-DESIGN								
Probabilities are % manual work required.								
ORDER HANDLING/SCREENING	5	0.200				1.00	$44.31	$0.74
GOC ORDER LOG	6	0.200				1.20	$44.31	$0.89
ENTER WA MASK	5	0.800				4.00	$44.31	$2.95
PREP LOOP INPUT/DRI	15	0.750				11.25	$44.31	$8.31
CIRCUIT DESIGN	30	1.000				30.00	$44.31	$22.16
DISTRIBUTE WORD DOC	2	0.900				1.80	$44.31	$1.33
Subtotal - DESIGN						**49.25**		**$36.37**
-CENTRAL OFFICE FRAMES								
ANALYZE ORDER	5	1.000				5.00	$43.81	$3.65
COMPLETE LOOP QUALIFICATION	5	1.000				5.00	$43.81	$3.65
COMPLETE CROSS-CONNECT	4	1.000				4.00	$43.81	$2.92
CONTINUITY/STRESS TESTS	15	1.000				15.00	$43.81	$10.95
POST COMPLETE IN WFADI	2	1.000				2.00	$43.81	$1.46
Subtotal - CENTRAL OFFICE FRAMES						**31.00**		**$22.64**
-LRAC								
SCREEN ORDER	2	1.000				2.00	$37.78	$1.26
LOAD WORK REQUEST TO TECH	5	1.000				5.00	$37.78	$3.15

NONRECURRING COST DETAIL SUMMARY

Study Name: NONRECURRING ELEMENTS
Study Year: 2002
Analyst: Deffley/Eoriatti
Product Group: Interconnection

State: South Dakota

Work Item	Time Minutes	Prob #1	Prob #2	Prob #3	Prob #4	Applied Time (Minutes)	Labor /Hour	Cost
A	B	C	D	E	F	G B * (C Thru F)	H	I H * (G/60)
UNE-COMBINATION LMC-LOOP DS1 FIRST (con't)								
CLOSE OUT WORK REQUEST	3	1.000				3.00	$37.78	$1.89
COMPLETE WORK IN WFADO	3	1.000				3.00	$37.78	$1.89
Subtotal - LRAC						**13.00**		**$8.19**
-INSTALLATION/FIELD TECHNICIAN								
TRAVEL TIME	21	1.000				21.00	$42.68	$14.94
0.2 probability is percent of time access/sac point work required.								
AP/SAC POINT WORK	13	0.200				2.60	$42.68	$1.85
CONTACT CCTI TO WORK ORDER	3	1.000				3.00	$42.68	$2.13
COMPLETE CONTINUITY TESTING	15	1.000				15.00	$42.68	$10.67
REPORT TEST RESULTS TO CCTI	2	1.000				2.00	$42.68	$1.42
COMPLETE WITH LRAC	3	1.000				3.00	$42.68	$2.13
Subtotal - INSTALLATION/FIELD TECHNICIAN						**46.60**		**$33.15**
-SERVICE DELIVERY IMPLEMENTOR								
SCREEN WFA FOR CIRCUIT	15	1.000				15.00	$43.81	$10.95
VERIFY LNO FOR CIRCUIT	10	1.000				10.00	$43.81	$7.30
TEST CIRCUIT	35	1.000				35.00	$43.81	$25.56
NOTIFY CUSTOMER	5	1.000				5.00	$43.81	$3.65
COMPLETE CIRCUIT IN WFA/C	10	1.000				10.00	$43.81	$7.30
Subtotal - SERVICE DELIVERY IMPLEMENTOR						**75.00**		**$54.76**
DISCONNECT								
-INTERCONNECT SERVICE CENTER								
Review LSR for completeness and accuracy, contractual entries	3	1.000				3.00	$40.03	$2.00
Verify existing account (access CSR in BOSS/CARS) and obtain closing bill address.	2	1.000				2.00	$40.03	$1.33
Type, review and submit to customer the Firm Order Confirmation (FOC)	2	1.000				2.00	$40.03	$1.33
Input order into service order processor. Type and format order for billing and provisioning	10	1.000				10.00	$40.03	$6.67
Populate required fields	3	1.000				3.00	$40.03	$2.00
Ensure order is successfully distributed to the systems and is ready for provisioning	3	1.000				3.00	$40.03	$2.00
Subtotal - INTERCONNECT SERVICE CENTER						**23.00**		**$15.34**
-DESIGN								
Probabilities are % manual work required.								
ORDER HANDLING/SCREEN	5	0.100				0.50	$44.31	$0.37
GOC ORDER LOG	6	0.100				0.60	$44.31	$0.44
ENTER WA MASK	5	0.100				0.50	$44.31	$0.37
DISCONNECT CIRCUIT	5	0.100				0.50	$44.31	$0.37

NONRECURRING COST DETAIL SUMMARY

Study Name: NONRECURRING ELEMENTS
Study Year: 2002
Analyst: Deffley/Eoriatti
Product Group: Interconnection

ENRC Version: 2.16
Date: 06/03/02

State: South Dakota

Work Item	Time Minutes	Prob #1	Prob #2	Prob #3	Prob #4	Applied Time (Minutes)	Labor /Hour	Cost
A	B	C	D	E	F	G B * (C Thru F)	H	I H * (G/60)
UNE-COMBINATION LMC-LOOP DS1 FIRST (con't)								
DISTRIBUTE WORD DOC	2	0.100				0.20	$44.31	$0.15
Subtotal - DESIGN						**2.30**		**$1.70**
-CENTRAL OFFICE FRAMES								
ANALYZE ORDER	5	1.000				5.00	$43.81	$3.65
REMOVE JUMPER	2.3	1.000				2.30	$43.81	$1.68
COMPETE WORK IN WFADI	2	1.000				2.00	$43.81	$1.46
Subtotal - CENTRAL OFFICE FRAMES						**9.30**		**$6.79**
-SERVICE DELIVERY IMPLEMENTOR								
SCREEN WFA FOR CIRCUIT	5	1.000				5.00	$43.81	$3.65
CONTACT CUSTOMER	5	1.000				5.00	$43.81	$3.65
COMPLETE CIRCUIT IN WFA/C	5	1.000				5.00	$43.81	$3.65
Subtotal - SERVICE DELIVERY IMPLEMENTOR						**15.00**		**$10.95**
Total For Service:						**302.45**		**$215.24**

NONRECURRING COST DETAIL SUMMARY

Study Name: NONRECURRING ELEMENTS
Study Year: 2002
Analyst: Deffley/Eoriatti
Product Group: Interconnection

State: South Dakota

	Work Item	Time Minutes	Prob #1	Prob #2	Prob #3	Prob #4	Applied Time (Minutes)	Labor /Hour	Cost
	A	B	C	D	E	F	G	H	I
							B * (C Thru F)		H * (G/60)

UNE-COMBINATION LMC-LOOP DS1 FIRST (con't)

		Cost Calculation		Cost Factor	Cost
		B	C	D	E
27002	**Direct Cost**				$215.24
27003					
27004					
27005					
27006					
27007	***Marketing & Business Fees***				
27008	Product Management Expense	D27008*E27002		0.019957	$4.30
27009	Sales Expense	D27009*E27002		0.011877	$2.56
27010	Product Advertising Expense	D27010*E27002		0.000000	$0.00
27011	Business Fees (Other Operating Taxes)	D27011*Sum(E27002:E27010)		0.001483	$0.33
27012	***Total Marketing & Business Fees***	Sum(E27002:E27011)			$7.18
27013					
27014	***Sub-Total Direct Cost & Marketing***	E27002+E27012			$222.42
27015					
27016	***Other Direct Expenses***				
27017	Network Operations	D27017*E27014		0.034832	$7.75
27018	Network Support Assets	D27018*E27014		0.014703	$3.27
27019	General Support Assets	D27019*E27014		0.088742	$19.74
27020	General Purpose Computers	D27020*E27014		0.043342	$9.64
27021	Uncollectible	D27021*E27014		0.003786	$0.84
27022	Accounting & Finance Expense	D27022*E27014		0.007346	$1.63
27023	Human Resources Expense	D27023*E27014		0.008294	$1.84
27024	Information Management Expense	D27024*E27014		0.070887	$15.77
27025	Intangibles	D27025*E27014		0.000000	$0.00
27026	***Total Other Direct Expenses***	Sum(E27017:E27025)			$60.48
27027					
27028	***TELRIC***	E27017+E27026			$282.91
27029					
27030	***Common***				
27031	Executive Expense	D27031*E27028		0.011267	$3.19
27032	Planning Expense	D27032*E27028		0.000525	$0.15
27033	External Relations Expense	D27033*E27028		0.037846	$10.71
27034	Legal Expense	D27034*E27028		0.004717	$1.33
27035	Other Procurement Expense	D27035*E27028		0.001860	$0.53
27036	Research & Development Expense	D27036*E27028		0.000006	$0.00
27037	Other General and Admin Expense	D27037*E27028		0.015064	$4.26
27038	***Common Costs***	Sum(E27031:E27037)			$20.17
27039					
27040	***TELRIC + Common Costs***	E27028+E27038			$303.07

NONRECURRING COST DETAIL SUMMARY

Study Name: NONRECURRING ELEMENTS
Study Year: 2002
Analyst: Deffley/Eoriatti
Product Group: Interconnection

State: South Dakota

Work Item	Time Minutes	Prob #1	Prob #2	Prob #3	Prob #4	Applied Time (Minutes)	Labor /Hour	Cost
A	B	C	D	E	F	G B * (C Thru F)	H	I H * (G/60)
UNE-COMBINATION LMC-LOOP DS1 EACH ADDITIONAL								
ADD								
-INTERCONNECT SERVICE CENTER								
.6 probability is percent of time this activity will occur.								
Verify Connecting Facility Assignment (CFA) for facility/circuit availability	1	1.000				1.00	$40.03	$0.67
Populate required fields	3	1.000				3.00	$40.03	$2.00
Input order into service order processor. Type and format order for billing and provisioning	5	1.000				5.00	$40.03	$3.34
Ensure order is successfully distributed to the systems and is ready for provisioning	3	1.000				3.00	$40.03	$2.00
Handle calls from other departments working the order	1	0.600				0.60	$40.03	$0.40
Handle issues including conditioning, facility, cable&pair	1	0.600				0.60	$40.03	$0.40
Subtotal - INTERCONNECT SERVICE CENTER						**13.20**		**$8.81**
-DESIGN								
Probabilities are % manual work required. Reciprocal is mechanization rate.								
ORDER HANDLING/SCREENING	5	0.200				1.00	$44.31	$0.74
GOC ORDER LOG	6	0.200				1.20	$44.31	$0.89
ENTER WA MASK	5	0.800				4.00	$44.31	$2.95
PREP LOOP INPUT/DRI	15	0.750				11.25	$44.31	$8.31
CIRCUIT DESIGN	30	1.000				30.00	$44.31	$22.16
DISTRIBUTE WORD DOC	2	0.900				1.80	$44.31	$1.33
Subtotal - DESIGN						**49.25**		**$36.37**
-CENTRAL OFFICE FRAMES								
ANALYZE ORDER	5	1.000				5.00	$43.81	$3.65
COMPLETE LOOP QUALIFICATION	5	1.000				5.00	$43.81	$3.65
COMPLETE CROSS-CONNECT	4	1.000				4.00	$43.81	$2.92
CONTINUITY/STRESS TESTS	15	1.000				15.00	$43.81	$10.95
POST COMPLETE IN WFADI	2	1.000				2.00	$43.81	$1.46
Subtotal - CENTRAL OFFICE FRAMES						**31.00**		**$22.64**
-LRAC								
SCREEN ORDER	2	1.000				2.00	$37.78	$1.26
LOAD WORK REQUEST TO TECH	5	1.000				5.00	$37.78	$3.15
CLOSE OUT WORK REQUEST	3	1.000				3.00	$37.78	$1.89
COMPLETE WORK IN WFADO	3	1.000				3.00	$37.78	$1.89
Subtotal - LRAC						**13.00**		**$8.19**
-INSTALLATION/FIELD TECHNICIAN								

NONRECURRING COST DETAIL SUMMARY

Study Name: NONRECURRING ELEMENTS
Study Year: 2002
Analyst: Deffley/Eoriatti
Product Group: Interconnection

State: South Dakota

Work Item	Time Minutes	Prob #1	Prob #2	Prob #3	Prob #4	Applied Time (Minutes)	Labor /Hour	Cost
A	B	C	D	E	F	G B * (C Thru F)	H	I H * (G/60)
UNE-COMBINATION LMC-LOOP DS1 EACH ADDITIONAL (con't,								
0.2 probability is percent of time access/sac point work required.								
AP/SAC POINT WORK	13	0.200				2.60	$42.68	$1.85
COMPLETE CONTINUITY TESTING	15	1.000				15.00	$42.68	$10.67
REPORT TEST RESULTS TO CCTI	2	1.000				2.00	$42.68	$1.42
COMPLETE WITH LRAC	1	1.000				1.00	$42.68	$0.71
Subtotal - INSTALLATION/FIELD TECHNICIAN						**20.60**		**$14.65**
-SERVICE DELIVERY IMPLEMENTOR								
SCREEN WFA FOR CIRCUIT	15	1.000				15.00	$43.81	$10.95
VERIFY LNO FOR CIRCUIT	10	1.000				10.00	$43.81	$7.30
TEST CIRCUIT	35	1.000				35.00	$43.81	$25.56
COMPLETE CIRCUIT IN WFA/C	10	1.000				10.00	$43.81	$7.30
Subtotal - SERVICE DELIVERY IMPLEMENTOR						**70.00**		**$51.11**
DISCONNECT								
-INTERCONNECT SERVICE CENTER								
Populate required fields	3	1.000				3.00	$40.03	$2.00
Input order into service order processor. Type and format order for billing and provisioning	5	1.000				5.00	$40.03	$3.34
Ensure order is successfully distributed to the systems and is ready for provisioning	3	1.000				3.00	$40.03	$2.00
Subtotal - INTERCONNECT SERVICE CENTER						**11.00**		**$7.34**
-DESIGN								
Probabilities are % manual work required. Reciprocal is mechanization rate.								
ORDER HANDLING/SCREEN	5	0.100				0.50	$44.31	$0.37
GOC ORDER LOG	6	0.100				0.60	$44.31	$0.44
ENTER WA MASK	5	0.100				0.50	$44.31	$0.37
DISCONNECT CIRCUIT	5	0.100				0.50	$44.31	$0.37
DISTRIBUTE WORD DOC	2	0.100				0.20	$44.31	$0.15
Subtotal - DESIGN						**2.30**		**$1.70**
-CENTRAL OFFICE FRAMES								
ANALYZE ORDER	5	1.000				5.00	$43.81	$3.65
REMOVE JUMPER	2.3	1.000				2.30	$43.81	$1.68
COMPETE WORK IN WFADI	2	1.000				2.00	$43.81	$1.46
Subtotal - CENTRAL OFFICE FRAMES						**9.30**		**$6.79**
Total For Service:						**219.65**		**$157.59**

Study Name: NONRECURRING ELEMENTS
Study Year: 2002
Analyst: Deffley/Eoriatti
Product Group: Interconnection

State: South Dakota

Work Item	Time Minutes	Prob #1	Prob #2	Prob #3	Prob #4	Applied Time (Minutes)	Labor /Hour	Cost
A	B	C	D	E	F	G	H	I
						B * (C Thru F)		H * (G/60)

UNE-COMBINATION LMC-LOOP DS1 EACH ADDITIONAL (con't,

27137	**Direct Cost**				$157.59
27138					
27139		Cost Calculation		Cost Factor	Cost
27140		B	C	D	E
27141					
27142	***Marketing & Business Fees***				
27143	Product Management Expense	D27143*E27137		0.019957	$3.15
27144	Sales Expense	D27144*E27137		0.011877	$1.87
27145	Product Advertising Expense	D27145*E27137		0.000000	$0.00
27146	Business Fees (Other Operating Taxes)	D27146*Sum(E27137:E27145)		0.001483	$0.24
27147	***Total Marketing & Business Fees***	Sum(E27137:E27146)			$5.26
27148					
27149	***Sub-Total Direct Cost & Marketing***	E27137+E27147			$162.85
27150					
27151	***Other Direct Expenses***				
27152	Network Operations	D27152*E27149		0.034832	$5.67
27153	Network Support Assets	D27153*E27149		0.014703	$2.39
27154	General Support Assets	D27154*E27149		0.088742	$14.45
27155	General Purpose Computers	D27155*E27149		0.043342	$7.06
27156	Uncollectible	D27156*E27149		0.003786	$0.62
27157	Accounting & Finance Expense	D27157*E27149		0.007346	$1.20
27158	Human Resources Expense	D27158*E27149		0.008294	$1.35
27159	Information Management Expense	D27159*E27149		0.070887	$11.54
27160	Intangibles	D27160*E27149		0.000000	$0.00
27161	***Total Other Direct Expenses***	Sum(E27152:E27160)			$44.28
27162					
27163	***TELRIC***	E27152+E27161			$207.13
27164					
27165	***Common***				
27166	Executive Expense	D27166*E27163		0.011267	$2.33
27167	Planning Expense	D27167*E27163		0.000525	$0.11
27168	External Relations Expense	D27168*E27163		0.037846	$7.84
27169	Legal Expense	D27169*E27163		0.004717	$0.98
27170	Other Procurement Expense	D27170*E27163		0.001860	$0.39
27171	Research & Development Expense	D27171*E27163		0.000006	$0.00
27172	Other General and Admin Expense	D27172*E27163		0.015064	$3.12
27173	***Common Costs***	Sum(E27166:E27172)			$14.77
27174					
27175	***TELRIC + Common Costs***	E27163+E27173			$221.90

NONRECURRING COST DETAIL SUMMARY

Study Name: NONRECURRING ELEMENTS
Study Year: 2002
Analyst: Deffley/Eoriatti
Product Group: Interconnection

State: South Dakota

Work Item	Time Minutes	Prob #1	Prob #2	Prob #3	Prob #4	Applied Time (Minutes)	Labor /Hour	Cost
A	B	C	D	E	F	G B * (C Thru F)	H	I H * (G/60)
PRIVATE LINE TO LOOP MUX CONVERSION								
ADD								
-INTERCONNECT SERVICE CENTER								
Review LSR for completeness and accuracy, contractual entries	3	1.000				3.00	$39.16	$1.96
Exchange info, obtain CO, name, address, office type. Access Telephone Address Guide to obta	4	1.000				4.00	$39.16	$2.61
CPPD look-up billing USOC's for co-provider	2	1.000				2.00	$39.16	$1.31
Summary Bill List-Look up Billing Telephone Number, tax code, and bill date	2	1.000				2.00	$39.16	$1.31
Verify Qwest end user Customer Service Record if order issuance applicable to this product	2	1.000				2.00	$39.16	$1.31
Determine if the end user has Qwest retail contract	2	1.000				2.00	$39.16	$1.31
Determine critical dates	1	1.000				1.00	$39.16	$0.65
Populate required fields	3	1.000				3.00	$39.16	$1.96
Type, review and submit to customer the Firm Order Confirmation (FOC)	3	1.000				3.00	$39.16	$1.96
Input order into service order processor. Type and format order for billing and provisioning	10	1.000				10.00	$39.16	$6.53
Ensure order is successfully distributed to the systems and is ready for provisioning	3	1.000				3.00	$39.16	$1.96
Subtotal - INTERCONNECT SERVICE CENTER						**35.00**		**$22.84**
-SERVICE DESIGN CENTER - IMPLEMENTOR								
Access Work Authorization	2	1.000				2.00	$44.31	$1.48
Closeout activities	3	1.000				3.00	$44.31	$2.22
Subtotal - SERVICE DESIGN CENTER - IMPLEMENTOR						**5.00**		**$3.69**
Total For Service:						**40.00**		**$26.54**

NONRECURRING COST DETAIL SUMMARY

Study Name: NONRECURRING ELEMENTS
Study Year: 2002
Analyst: Deffley/Eoriatti
Product Group: Interconnection

State: South Dakota

	Work Item	Time Minutes	Prob #1	Prob #2	Prob #3	Prob #4	Applied Time (Minutes)	Labor /Hour	Cost
	A	B	C	D	E	F	G	H	I
							B * (C Thru F)		H * (G/60)

PRIVATE LINE TO LOOP MUX CONVERSION (con't)

		Cost Calculation		Cost Factor	Cost
		B	C	D	E
27227	**Direct Cost**				$26.54
27228					
27229					
27230					
27231					
27232	***Marketing & Business Fees***				
27233	Product Management Expense	D27233*E27227		0.019957	$0.53
27234	Sales Expense	D27234*E27227		0.011877	$0.32
27235	Product Advertising Expense	D27235*E27227		0.000000	$0.00
27236	Business Fees (Other Operating Taxes)	D27236*Sum(E27227:E27235)		0.001483	$0.04
27237	***Total Marketing & Business Fees***	Sum(E27227:E27236)			$0.89
27238					
27239	***Sub-Total Direct Cost & Marketing***	E27227+E27237			$27.42
27240					
27241	***Other Direct Expenses***				
27242	Network Operations	D27242*E27239		0.034832	$0.96
27243	Network Support Assets	D27243*E27239		0.014703	$0.40
27244	General Support Assets	D27244*E27239		0.088742	$2.43
27245	General Purpose Computers	D27245*E27239		0.043342	$1.19
27246	Uncollectible	D27246*E27239		0.003786	$0.10
27247	Accounting & Finance Expense	D27247*E27239		0.007346	$0.20
27248	Human Resources Expense	D27248*E27239		0.008294	$0.23
27249	Information Management Expense	D27249*E27239		0.070887	$1.94
27250	Intangibles	D27250*E27239		0.000000	$0.00
27251	***Total Other Direct Expenses***	Sum(E27242:E27250)			$7.46
27252					
27253	***TELRIC***	E27242+E27251			$34.88
27254					
27255	***Common***				
27256	Executive Expense	D27256*E27253		0.011267	$0.39
27257	Planning Expense	D27257*E27253		0.000525	$0.02
27258	External Relations Expense	D27258*E27253		0.037846	$1.32
27259	Legal Expense	D27259*E27253		0.004717	$0.16
27260	Other Procurement Expense	D27260*E27253		0.001860	$0.06
27261	Research & Development Expense	D27261*E27253		0.000006	$0.00
27262	Other General and Admin Expense	D27262*E27253		0.015064	$0.53
27263	***Common Costs***	Sum(E27256:E27262)			$2.49
27264					
27265	***TELRIC + Common Costs***	E27253+E27263			$37.36

NONRECURRING COST DETAIL SUMMARY

Study Name: NONRECURRING ELEMENTS
Study Year: 2002
Analyst: Deffley/Eoriatti
Product Group: Interconnection

ENRC Version: 2.16
Date: 06/03/02

State: South Dakota

Work Item	Time Minutes	Prob #1	Prob #2	Prob #3	Prob #4	Applied Time (Minutes)	Labor /Hour	Cost
A	B	C	D	E	F	G	H	I
						B * (C Thru F)		H * (G/60)
UNE-COMBINATION LMC MULTIPLEXER DS1 TO DSO								
ADD								
-INTERCONNECT SERVICE CENTER								
.6 probability is percent of time this activity will occur.								
Review LSR for completeness and accuracy, contractual entries	3	1.000				3.00	$40.03	$2.00
Verify Connecting Facility Assignment (CFA) for facility/circuit availability	1	1.000				1.00	$40.03	$0.67
Exchange info, obtain CO, name, address, office type. Access Telephone Address Guide to obta	4	1.000				4.00	$40.03	$2.67
CPPD look-up billing USOC's for co-provider	2	1.000				2.00	$40.03	$1.33
Summary Bill List-Look up Billing Telephone Number, tax code, and bill date	2	1.000				2.00	$40.03	$1.33
Determine critical dates	1	1.000				1.00	$40.03	$0.67
Populate required fields	3	1.000				3.00	$40.03	$2.00
Type, review and submit to customer the Firm Order Confirmation (FOC)	3	1.000				3.00	$40.03	$2.00
Input order into service order processor. Type and format order for billing and provisioning	10	1.000				10.00	$40.03	$6.67
Ensure order is successfully distributed to the systems and is ready for provisioning	3	1.000				3.00	$40.03	$2.00
Handle calls from other departments working the order	5	0.600				3.00	$40.03	$2.00
Handle issues including conditioning, facility, cable&pair	5	0.600				3.00	$40.03	$2.00
Subtotal - INTERCONNECT SERVICE CENTER						**38.00**		**$25.35**
-DESIGN								
Probabilities are % manual work required.								
ORDER HANDLING/SCREENING	5	0.200				1.00	$44.31	$0.74
GOC ORDER LOG	6	0.200				1.20	$44.31	$0.89
ENTER WA MASK	5	0.800				4.00	$44.31	$2.95
PREP LOOP INPUT	15	0.750				11.25	$44.31	$8.31
CIRCUIT DESIGN	30	1.000				30.00	$44.31	$22.16
DISTRIBUTE WORD	2	0.900				1.80	$44.31	$1.33
Subtotal - DESIGN						**49.25**		**$36.37**
-CENTRAL OFFICE FRAMES								
ANALYZE ORDER	5	1.000				5.00	$43.81	$3.65
CONTACT CCT-I TO WORK ORDER	3	1.000				3.00	$43.81	$2.19
DSX1 CROSS-CONNECT	4	1.000				4.00	$43.81	$2.92
PLACE LOOPBACK TEST PLUG	2	1.000				2.00	$43.81	$1.46
HIGH SIDE CONFORMANCE TEST	5	1.000				5.00	$43.81	$3.65
POST COMPLETE IN WFA-DI	2	1.000				2.00	$43.81	$1.46
COMPLETE WITH CCT-I	3	1.000				3.00	$43.81	$2.19
Subtotal - CENTRAL OFFICE FRAMES						**24.00**		**$17.52**
-SERVICE DELIVERY IMPLEMENTOR								

Study Name: NONRECURRING ELEMENTS
Study Year: 2002
Analyst: Deffley/Eoriatti
Product Group: Interconnection

State: South Dakota

Work Item	Time Minutes	Prob #1	Prob #2	Prob #3	Prob #4	Applied Time (Minutes)	Labor /Hour	Cost
A	B	C	D	E	F	G B * (C Thru F)	H	I H * (G/60)
UNE-COMBINATION LMC MULTIPLEXER DS1 TO DSO (con't,								
SCREEN WFA FOR CIRCUIT	15	1.000				15.00	$43.81	$10.95
VERIFY LNO COMPLETION	10	1.000				10.00	$43.81	$7.30
NOTIFY CUSTOMER	5	1.000				5.00	$43.81	$3.65
COMPLETE CIRCUIT IN WFA/C	10	1.000				10.00	$43.81	$7.30
Subtotal - SERVICE DELIVERY IMPLEMENTOR						**40.00**		**$29.21**
DISCONNECT								
-INTERCONNECT SERVICE CENTER								
Review LSR for completeness and accuracy, contractual entries	3	1.000				3.00	$40.03	$2.00
Verify existing account (access CSR in BOSS/CARS) and obtain closing bill address.	2	1.000				2.00	$40.03	$1.33
Type, review and submit to customer the Firm Order Confirmation (FOC)	2	1.000				2.00	$40.03	$1.33
Input order into service order processor. Type and format order for billing and provisioning	10	1.000				10.00	$40.03	$6.67
Populate required fields	3	1.000				3.00	$40.03	$2.00
Ensure order is successfully distributed to the systems and is ready for provisioning	3	1.000				3.00	$40.03	$2.00
Subtotal - INTERCONNECT SERVICE CENTER						**23.00**		**$15.34**
-DESIGN								
Probabilities are % manual work required.								
ORDER HANDLING/SCREEN	5	0.100				0.50	$44.31	$0.37
GOC ORDER LOG	6	0.100				0.60	$44.31	$0.44
ENTER WA MASK	5	0.100				0.50	$44.31	$0.37
DISCONNECT CIRCUIT	5	0.100				0.50	$44.31	$0.37
DISTRIBUTE WORD DOC	2	0.100				0.20	$44.31	$0.15
Subtotal - DESIGN						**2.30**		**$1.70**
-CENTRAL OFFICE FRAMES								
ANALYZE ORDER	5	1.000				5.00	$43.81	$3.65
RMV CROSS CONNECT	2.3	1.000				2.30	$43.81	$1.68
COMPLETE ORDER IN WFA-DI	2	1.000				2.00	$43.81	$1.46
Subtotal - CENTRAL OFFICE FRAMES						**9.30**		**$6.79**
-SERVICE DELIVERY IMPLEMENTOR								
SCREEN WFA FOR CIRCUIT	5	1.000				5.00	$43.81	$3.65
CONTACT CUSTOMER	5	1.000				5.00	$43.81	$3.65
COMPLETE CIRCUIT IN WFA/C	5	1.000				5.00	$43.81	$3.65
Subtotal - SERVICE DELIVERY IMPLEMENTOR						**15.00**		**$10.95**

NONRECURRING COST DETAIL SUMMARY

Study Name: NONRECURRING ELEMENTS
Study Year: 2002
Analyst: Deffley/Eoriatti
Product Group: Interconnection

ENRC Version: 2.16
Date: 06/03/02

State: South Dakota

Work Item	Time Minutes	Prob #1	Prob #2	Prob #3	Prob #4	Applied Time (Minutes)	Labor /Hour	Cost
A	B	C	D	E	F	G	H	I
						B * (C Thru F)		H * (G/60)
UNE-COMBINATION LMC MULTIPLEXER DS1 TO DSO (con't,								
Total For Service:						**200.85**		**$143.24**

NONRECURRING COST DETAIL SUMMARY

Study Name: NONRECURRING ELEMENTS
Study Year: 2002
Analyst: Deffley/Eoriatti
Product Group: Interconnection

State: South Dakota

	Work Item	Time Minutes	Prob #1	Prob #2	Prob #3	Prob #4	Applied Time (Minutes)	Labor /Hour	Cost
	A	B	C	D	E	F	G	H	I
							B * (C Thru F)		H * (G/60)

UNE-COMBINATION LMC MULTIPLEXER DS1 TO DSO (con't,

		Cost Calculation		Cost Factor	Cost
		B	C	D	E
27407	**Direct Cost**				$143.24
27408					
27409					
27410					
27411					
27412	***Marketing & Business Fees***				
27413	Product Management Expense	D27413*E27407		0.019957	$2.86
27414	Sales Expense	D27414*E27407		0.011877	$1.70
27415	Product Advertising Expense	D27415*E27407		0.000000	$0.00
27416	Business Fees (Other Operating Taxes)	D27416*Sum(E27407:E27415)		0.001483	$0.22
27417	***Total Marketing & Business Fees***	Sum(E27407:E27416)			$4.78
27418					
27419	***Sub-Total Direct Cost & Marketing***	E27407+E27417			$148.02
27420					
27421	***Other Direct Expenses***				
27422	Network Operations	D27422*E27419		0.034832	$5.16
27423	Network Support Assets	D27423*E27419		0.014703	$2.18
27424	General Support Assets	D27424*E27419		0.088742	$13.14
27425	General Purpose Computers	D27425*E27419		0.043342	$6.42
27426	Uncollectible	D27426*E27419		0.003786	$0.56
27427	Accounting & Finance Expense	D27427*E27419		0.007346	$1.09
27428	Human Resources Expense	D27428*E27419		0.008294	$1.23
27429	Information Management Expense	D27429*E27419		0.070887	$10.49
27430	Intangibles	D27430*E27419		0.000000	$0.00
27431	***Total Other Direct Expenses***	Sum(E27422:E27430)			$40.25
27432					
27433	***TELRIC***	E27422+E27431			$188.27
27434					
27435	***Common***				
27436	Executive Expense	D27436*E27433		0.011267	$2.12
27437	Planning Expense	D27437*E27433		0.000525	$0.10
27438	External Relations Expense	D27438*E27433		0.037846	$7.13
27439	Legal Expense	D27439*E27433		0.004717	$0.89
27440	Other Procurement Expense	D27440*E27433		0.001860	$0.35
27441	Research & Development Expense	D27441*E27433		0.000006	$0.00
27442	Other General and Admin Expense	D27442*E27433		0.015064	$2.84
27443	***Common Costs***	Sum(E27436:E27442)			$13.42
27444					
27445	***TELRIC + Common Costs***	E27433+E27443			$201.69

NONRECURRING COST DETAIL SUMMARY

Study Name: NONRECURRING ELEMENTS
Study Year: 2002
Analyst: Deffley/Eoriatti
Product Group: Interconnection

State: South Dakota

Work Item	Time Minutes	Prob #1	Prob #2	Prob #3	Prob #4	Applied Time (Minutes)	Labor /Hour	Cost
A	B	C	D	E	F	G B * (C Thru F)	H	I H * (G/60)
UNE-COMBINATION LMC MULTIPLEXER DS3 TO DS1								
ADD								
-INTERCONNECT SERVICE CENTER								
.6 probability is percent of time this activity will occur.								
Review LSR for completeness and accuracy, contractual entries	3	1.000				3.00	$40.03	$2.00
Verify Connecting Facility Assignment (CFA) for facility/circuit availability	1	1.000				1.00	$40.03	$0.67
Exchange info, obtain CO, name, address, office type. Access Telephone Address Guide to obta	4	1.000				4.00	$40.03	$2.67
CPPD look-up billing USOC's for co-provider	2	1.000				2.00	$40.03	$1.33
Summary Bill List-Look up Billing Telephone Number, tax code, and bill date	2	1.000				2.00	$40.03	$1.33
Determine critical dates	1	1.000				1.00	$40.03	$0.67
Populate required fields	3	1.000				3.00	$40.03	$2.00
Type, review and submit to customer the Firm Order Confirmation (FOC)	3	1.000				3.00	$40.03	$2.00
Input order into service order processor. Type and format order for billing and provisioning	10	1.000				10.00	$40.03	$6.67
Ensure order is successfully distributed to the systems and is ready for provisioning	3	1.000				3.00	$40.03	$2.00
Handle calls from other departments working the order	5	0.600				3.00	$40.03	$2.00
Handle issues including conditioning, facility, cable&pair	5	0.600				3.00	$40.03	$2.00
Subtotal - INTERCONNECT SERVICE CENTER						**38.00**		**$25.35**
-DESIGN								
Probabilities are % manual work required.								
ORDER HANDLING/SCREENING	5	0.200				1.00	$44.31	$0.74
GOC ORDER LOG	6	0.200				1.20	$44.31	$0.89
ENTER WA MASK	5	0.800				4.00	$44.31	$2.95
PREP LOOP INPUT	15	0.750				11.25	$44.31	$8.31
CIRCUIT DESIGN	30	1.000				30.00	$44.31	$22.16
DISTRIBUTE WORD	2	0.900				1.80	$44.31	$1.33
Subtotal - DESIGN						**49.25**		**$36.37**
-CENTRAL OFFICE FRAMES								
ANALYZE ORDER	5	1.000				5.00	$43.81	$3.65
CONTACT CCT-I TO WORK ORDER	3	1.000				3.00	$43.81	$2.19
DSX1 CROSS-CONNECT	4	1.000				4.00	$43.81	$2.92
PLACE LOOPBACK TEST PLUG	2	1.000				2.00	$43.81	$1.46
HIGH SIDE CONFORMANCE TEST	5	1.000				5.00	$43.81	$3.65
POST COMPLETE IN WFA-DI	2	1.000				2.00	$43.81	$1.46
COMPLETE WITH CCT-I	3	1.000				3.00	$43.81	$2.19
Subtotal - CENTRAL OFFICE FRAMES						**24.00**		**$17.52**
-SERVICE DELIVERY IMPLEMENTOR								

Work Item	Time Minutes	Prob #1	Prob #2	Prob #3	Prob #4	Applied Time (Minutes)	Labor /Hour	Cost
A	B	C	D	E	F	G B * (C Thru F)	H	I H * (G/60)
UNE-COMBINATION LMC MULTIPLEXER DS3 TO DS1 (con't,								
SCREEN WFA FOR CIRCUIT	15	1.000				15.00	$43.81	$10.95
VERIFY LNO COMPLETION	10	1.000				10.00	$43.81	$7.30
NOTIFY CUSTOMER	5	1.000				5.00	$43.81	$3.65
COMPLETE CIRCUIT IN WFA/C	10	1.000				10.00	$43.81	$7.30
Subtotal - SERVICE DELIVERY IMPLEMENTOR						**40.00**		**$29.21**
DISCONNECT								
-INTERCONNECT SERVICE CENTER								
Review LSR for completeness and accuracy, contractual entries	3	1.000				3.00	$40.03	$2.00
Verify existing account (access CSR in BOSS/CARS) and obtain closing bill address.	2	1.000				2.00	$40.03	$1.33
Type, review and submit to customer the Firm Order Confirmation (FOC)	2	1.000				2.00	$40.03	$1.33
Input order into service order processor. Type and format order for billing and provisioning	10	1.000				10.00	$40.03	$6.67
Populate required fields	3	1.000				3.00	$40.03	$2.00
Ensure order is successfully distributed to the systems and is ready for provisioning	3	1.000				3.00	$40.03	$2.00
Subtotal - INTERCONNECT SERVICE CENTER						**23.00**		**$15.34**
-DESIGN								
Probabilities are % manual work required. Reciprocal is mechanization rate.								
ORDER HANDLING/SCREEN	5	0.100				0.50	$44.31	$0.37
GOC ORDER LOG	6	0.100				0.60	$44.31	$0.44
ENTER WA MASK	5	0.100				0.50	$44.31	$0.37
DISCONNECT CIRCUIT	5	0.100				0.50	$44.31	$0.37
DISTRIBUTE WORD DOC	2	0.100				0.20	$44.31	$0.15
Subtotal - DESIGN						**2.30**		**$1.70**
-CENTRAL OFFICE FRAMES								
ANALYZE ORDER	5	1.000				5.00	$43.81	$3.65
RMV CROSS CONNECT	2.3	1.000				2.30	$43.81	$1.68
COMPLETE ORDER IN WFA-DI	2	1.000				2.00	$43.81	$1.46
Subtotal - CENTRAL OFFICE FRAMES						**9.30**		**$6.79**
-SERVICE DELIVERY IMPLEMENTOR								
SCREEN WFA FOR CIRCUIT	5	1.000				5.00	$43.81	$3.65
CONTACT CUSTOMER	5	1.000				5.00	$43.81	$3.65
COMPLETE CIRCUIT IN WFA/C	5	1.000				5.00	$43.81	$3.65
Subtotal - SERVICE DELIVERY IMPLEMENTOR						**15.00**		**$10.95**

NONRECURRING COST DETAIL SUMMARY

Study Name: NONRECURRING ELEMENTS
Study Year: 2002
Analyst: Deffley/Eoriatti
Product Group: Interconnection

ENRC Version: 2.16
Date: 06/03/02

State: South Dakota

Work Item	Time Minutes	Prob #1	Prob #2	Prob #3	Prob #4	Applied Time (Minutes)	Labor /Hour	Cost
A	B	C	D	E	F	G	H	I
						B * (C Thru F)		H * (G/60)
UNE-COMBINATION LMC MULTIPLEXER DS3 TO DS1 (con't,								
Total For Service:						**200.85**		**$143.24**

	Work Item	Time Minutes	Prob #1	Prob #2	Prob #3	Prob #4	Applied Time (Minutes)	Labor /Hour	Cost
	A	B	C	D	E	F	G B * (C Thru F)	H	I H * (G/60)

UNE-COMBINATION LMC MULTIPLEXER DS3 TO DS1 (con't,

27587	**Direct Cost**				$143.24
27588					
27589		**Cost Calculation**		**Cost Factor**	**Cost**
27590		**B**	**C**	**D**	**E**
27591					
27592	***Marketing & Business Fees***				
27593	Product Management Expense	D27593*E27587		0.019957	$2.86
27594	Sales Expense	D27594*E27587		0.011877	$1.70
27595	Product Advertising Expense	D27595*E27587		0.000000	$0.00
27596	Business Fees (Other Operating Taxes)	D27596*Sum(E27587:E27595)		0.001483	$0.22
27597	***Total Marketing & Business Fees***	Sum(E27587:E27596)			$4.78
27598					
27599	***Sub-Total Direct Cost & Marketing***	E27587+E27597			$148.02
27600					
27601	***Other Direct Expenses***				
27602	Network Operations	D27602*E27599		0.034832	$5.16
27603	Network Support Assets	D27603*E27599		0.014703	$2.18
27604	General Support Assets	D27604*E27599		0.088742	$13.14
27605	General Purpose Computers	D27605*E27599		0.043342	$6.42
27606	Uncollectible	D27606*E27599		0.003786	$0.56
27607	Accounting & Finance Expense	D27607*E27599		0.007346	$1.09
27608	Human Resources Expense	D27608*E27599		0.008294	$1.23
27609	Information Management Expense	D27609*E27599		0.070887	$10.49
27610	Intangibles	D27610*E27599		0.000000	$0.00
27611	***Total Other Direct Expenses***	Sum(E27602:E27610)			$40.25
27612					
27613	***TELRIC***	E27602+E27611			$188.27
27614					
27615	***Common***				
27616	Executive Expense	D27616*E27613		0.011267	$2.12
27617	Planning Expense	D27617*E27613		0.000525	$0.10
27618	External Relations Expense	D27618*E27613		0.037846	$7.13
27619	Legal Expense	D27619*E27613		0.004717	$0.89
27620	Other Procurement Expense	D27620*E27613		0.001860	$0.35
27621	Research & Development Expense	D27621*E27613		0.000006	$0.00
27622	Other General and Admin Expense	D27622*E27613		0.015064	$2.84
27623	***Common Costs***	Sum(E27616:E27622)			$13.42
27624					
27625	***TELRIC + Common Costs***	E27613+E27623			$201.69

NONRECURRING COST DETAIL SUMMARY

Study Name: NONRECURRING ELEMENTS
Study Year: 2002
Analyst: Deffley/Eoriatti
Product Group: Interconnection

State: South Dakota

Work Item	Time Minutes	Prob #1	Prob #2	Prob #3	Prob #4	Applied Time (Minutes)	Labor /Hour	Cost
A	B	C	D	E	F	G B * (C Thru F)	H	I H * (G/60)
DS0 ENHANCED EXTENDED LOOP FIRST								
ADD								
-INTERCONNECT SERVICE CENTER								
.6 probability is percent of time this activity will occur.								
Review LSR for completeness and accuracy, contractual entries	3	1.000				3.00	$40.03	$2.00
Verify Connecting Facility Assignment (CFA) for facility/circuit availability	1	1.000				1.00	$40.03	$0.67
Exchange info, obtain CO, name, address, office type. Access Telephone Address Guide to obta	4	1.000				4.00	$40.03	$2.67
CPPD look-up billing USOC's for co-provider	2	1.000				2.00	$40.03	$1.33
Summary Bill List-Look up Billing Telephone Number, tax code, and bill date	2	1.000				2.00	$40.03	$1.33
Determine critical dates	1	1.000				1.00	$40.03	$0.67
Populate required fields	3	1.000				3.00	$40.03	$2.00
Type, review and submit to customer the Firm Order Confirmation (FOC)	3	1.000				3.00	$40.03	$2.00
Input order into service order processor. Type and format order for billing and provisioning	10	1.000				10.00	$40.03	$6.67
Ensure order is successfully distributed to the systems and is ready for provisioning	3	1.000				3.00	$40.03	$2.00
Handle calls from other departments working the order	5	0.600				3.00	$40.03	$2.00
Handle issues including conditioning, facility, cable&pair	5	0.600				3.00	$40.03	$2.00
Subtotal - INTERCONNECT SERVICE CENTER						**38.00**		**$25.35**
-LOOP PROVISIONING CENTER (LPC)								
.4 weighting is probability a Loop order will fall out for manual assistance.								
Clear RMA (Request for manual assistance)	11.25	0.400				4.50	$37.78	$2.83
Subtotal - LOOP PROVISIONING CENTER (LPC)						**4.50**		**$2.83**
-DESIGN								
Probabilities are % manual work required. Reciprocal is mechanization rate.								
Order handling/screening	5	0.200				1.00	$44.31	$0.74
GOC (Generic Order Control) order log	6	0.200				1.20	$44.31	$0.89
Enter WA (Work Authorization) mask	5	0.100				0.50	$44.31	$0.37
Prepare loop input/DRI (Design Related Information)	10	0.200				2.00	$44.31	$1.48
Circuit design	20	0.100				2.00	$44.31	$1.48
Distribute WORD (Work Order Record Detail) document	2	0.050				0.10	$44.31	$0.07
Subtotal - DESIGN						**6.80**		**$5.02**
-CO								
1 probability is for CO work at serving wirecenter.								
ANALYZE ORDER	5	1.000				5.00	$43.81	$3.65
1 JUMPER	4	1.000				4.00	$43.81	$2.92
TEST CIRCUIT	15	1.000				15.00	$43.81	$10.95
COMPLETE IN WFA-DI	2	1.000				2.00	$43.81	$1.46

NONRECURRING COST DETAIL SUMMARY

Study Name: NONRECURRING ELEMENTS
Study Year: 2002
Analyst: Deffley/Eoriatti
Product Group: Interconnection

ENRC Version: 2.16
Date: 06/03/02

State: South Dakota

Work Item	Time Minutes	Prob #1	Prob #2	Prob #3	Prob #4	Applied Time (Minutes)	Labor /Hour	Cost
A	B	C	D	E	F	G	H	I
						B * (C Thru F)		H * (G/60)
DS0 ENHANCED EXTENDED LOOP FIRST (con't)								
COMPLETE ORDER WITH CCT-I	3	1.000				3.00	$43.81	$2.19
.51 probability is percent DS0 EEL is order with DS0 interoffice. CO work at end office.								
ANALYZE ORDER	5	1.000	0.510			2.55	$43.81	$1.86
1 JUMPER	4	1.000	0.510			2.04	$43.81	$1.49
TEST CIRCUIT	15	1.000	0.510			7.65	$43.81	$5.59
COMPLETE IN WFA-DI	2	1.000	0.510			1.02	$43.81	$0.74
COMPLETE ORDER WITH CCT-I	3	1.000	0.510			1.53	$43.81	$1.12
Subtotal - CO						**43.79**		**$31.97**
-LOAD RESOURCE ADMINISTRATION CENTER (LRAC)								
Screen order	2	1.000				2.00	$37.78	$1.26
Load work request to technician	5	1.000				5.00	$37.78	$3.15
Close out work request with technician	3	1.000				3.00	$37.78	$1.89
Subtotal - LOAD RESOURCE ADMINISTRATION CENTER (LRAC,						**10.00**		**$6.30**
-INSTALLATION/FIELD TECHNICIAN								
Travel to end user premises	21	1.000				21.00	$42.68	$14.94
0.2 probability is percent of time access/sac point work required.								
Complete AP/SAC (Access Point/Serving Area Connection) Point wiring	13	0.200				2.60	$42.68	$1.85
Contact CCT-I (Customer Communication Technician-Implementor) to work orde	3	1.000				3.00	$42.68	$2.13
Complete performance/conformance testing	15	1.000				15.00	$42.68	$10.67
Report test results to CCT-I (Customer Communication Technician-Implementor)	2	1.000				2.00	$42.68	$1.42
Contact LRAC (Load Resource Administration Center) to close orde	3	1.000				3.00	$42.68	$2.13
Subtotal - INSTALLATION/FIELD TECHNICIAN						**46.60**		**$33.15**
-SERVICE DELIVERY IMPLEMENTOR								
Screen WFA (Work Force Administration) for circuit	15	1.000				15.00	$43.81	$10.95
Verify LNO (Local Network Operation) completion	10	1.000				10.00	$43.81	$7.30
Complete performance testing	15	1.000				15.00	$43.81	$10.95
Notify customer/co-provider of work completion	5	1.000				5.00	$43.81	$3.65
Post order complete in WFA/C (Work Force Administration - Control Module)	10	1.000				10.00	$43.81	$7.30
Subtotal - SERVICE DELIVERY IMPLEMENTOR						**55.00**		**$40.16**
DISCONNECT								
-INTERCONNECT SERVICE CENTER								
Review LSR for completeness and accuracy, contractual entries	3	1.000				3.00	$40.03	$2.00
Verify existing account (access CSR in BOSS/CARS) and obtain closing bill address.	2	1.000				2.00	$40.03	$1.33
Type, review and submit to customer the Firm Order Confirmation (FOC)	2	1.000				2.00	$40.03	$1.33

Work Item	Time Minutes	Prob #1	Prob #2	Prob #3	Prob #4	Applied Time (Minutes)	Labor /Hour	Cost
A	B	C	D	E	F	G B * (C Thru F)	H	I H * (G/60)
DS0 ENHANCED EXTENDED LOOP FIRST (con't)								
Input order into service order processor. Type and format order for billing and provisioning	10	1.000				10.00	$40.03	$6.67
Populate required fields	3	1.000				3.00	$40.03	$2.00
Ensure order is successfully distributed to the systems and is ready for provisioning	3	1.000				3.00	$40.03	$2.00
Subtotal - INTERCONNECT SERVICE CENTER						**23.00**		**$15.34**
-DESIGN								
Probabilities are % manual work required. Reciprocal is mechanization rate.								
Order handling/screening	5	0.100				0.50	$44.31	$0.37
GOC (Generic Order Control) order log	6	0.100				0.60	$44.31	$0.44
Enter WA (Work Authorization) mask	5	0.100				0.50	$44.31	$0.37
Disconnect circuit	5	0.100				0.50	$44.31	$0.37
Distribute WORD (Work Order Record Detail) document	2	0.050				0.10	$44.31	$0.07
Subtotal - DESIGN						**2.20**		**$1.62**
-CO								
1 probability is for CO work at serving wirecenter.								
ANALYZE ORDER	5	1.000				5.00	$43.81	$3.65
DISABLE CIRCUIT	2	1.000				2.00	$43.81	$1.46
DISC JUMPER	2.3	1.000				2.30	$43.81	$1.68
COMPLETE ORDER IN WFA-DI	2	1.000				2.00	$43.81	$1.46
.51 probability is percent DS0 EEL is order with DS0 interoffice. CO work at end office.								
ANALYZE ORDER	5	0.510				2.55	$43.81	$1.86
DISABLE CIRCUIT	2	0.510				1.02	$43.81	$0.74
DISC JUMPER	2.3	0.510				1.17	$43.81	$0.86
COMPLETE ORDER IN WFA-DI	2	0.510				1.02	$43.81	$0.74
Subtotal - CO						**17.06**		**$12.46**
-SERVICE DELIVERY IMPLEMENTOR								
Screen WFA (Work Force Administration) for circuit	5	1.000				5.00	$43.81	$3.65
Contact customer	5	1.000				5.00	$43.81	$3.65
Complete circuit in WFA/C (Work Force Administration - Control Module)	5	1.000				5.00	$43.81	$3.65
Subtotal - SERVICE DELIVERY IMPLEMENTOR						**15.00**		**$10.95**
Total For Service:						**261.95**		**$185.17**

NONRECURRING COST DETAIL SUMMARY

Study Name: NONRECURRING ELEMENTS
Study Year: 2002
Analyst: Deffley/Eoriatti
Product Group: Interconnection

State: South Dakota

	Work Item	Time Minutes	Prob #1	Prob #2	Prob #3	Prob #4	Applied Time (Minutes)	Labor /Hour	Cost
	A	B	C	D	E	F	G	H	I
							B * (C Thru F)		H * (G/60)

DS0 ENHANCED EXTENDED LOOP FIRST (con't)

			Cost Calculation		Cost Factor	Cost
			B	C	D	E
27767	**Direct Cost**					$185.17
27768						
27769						
27770						
27771						
27772	***Marketing & Business Fees***					
27773	Product Management Expense		D27773*E27767		0.019957	$3.70
27774	Sales Expense		D27774*E27767		0.011877	$2.20
27775	Product Advertising Expense		D27775*E27767		0.000000	$0.00
27776	Business Fees (Other Operating Taxes)		D27776*Sum(E27767:E27775)		0.001483	$0.28
27777	***Total Marketing & Business Fees***		Sum(E27767:E27776)			$6.18
27778						
27779	***Sub-Total Direct Cost & Marketing***		E27767+E27777			$191.34
27780						
27781	***Other Direct Expenses***					
27782	Network Operations		D27782*E27779		0.034832	$6.66
27783	Network Support Assets		D27783*E27779		0.014703	$2.81
27784	General Support Assets		D27784*E27779		0.088742	$16.98
27785	General Purpose Computers		D27785*E27779		0.043342	$8.29
27786	Uncollectible		D27786*E27779		0.003786	$0.72
27787	Accounting & Finance Expense		D27787*E27779		0.007346	$1.41
27788	Human Resources Expense		D27788*E27779		0.008294	$1.59
27789	Information Management Expense		D27789*E27779		0.070887	$13.56
27790	Intangibles		D27790*E27779		0.000000	$0.00
27791	***Total Other Direct Expenses***		Sum(E27782:E27790)			$52.03
27792						
27793	***TELRIC***		E27782+E27791			$243.38
27794						
27795	***Common***					
27796	Executive Expense		D27796*E27793		0.011267	$2.74
27797	Planning Expense		D27797*E27793		0.000525	$0.13
27798	External Relations Expense		D27798*E27793		0.037846	$9.21
27799	Legal Expense		D27799*E27793		0.004717	$1.15
27800	Other Procurement Expense		D27800*E27793		0.001860	$0.45
27801	Research & Development Expense		D27801*E27793		0.000006	$0.00
27802	Other General and Admin Expense		D27802*E27793		0.015064	$3.67
27803	***Common Costs***		Sum(E27796:E27802)			$17.35
27804						
27805	***TELRIC + Common Costs***		E27793+E27803			$260.73

Work Item	Time Minutes	Prob #1	Prob #2	Prob #3	Prob #4	Applied Time (Minutes)	Labor /Hour	Cost
A	B	C	D	E	F	G	H	I
						B * (C Thru F)		H * (G/60)
DS0 ENHANCED EXTENDED LOOP EACH ADDITIONAL								
ADD								
-INTERCONNECT SERVICE CENTER								
.6 probability is percent of time this activity will occur.								
Verify Connecting Facility Assignment (CFA) for facility/circuit availability	1	1.000				1.00	$40.03	$0.67
Populate required fields	3	1.000				3.00	$40.03	$2.00
Input order into service order processor. Type and format order for billing and provisioning	5	1.000				5.00	$40.03	$3.34
Ensure order is successfully distributed to the systems and is ready for provisioning	3	1.000				3.00	$40.03	$2.00
Handle calls from other departments working the order	1	0.600				0.60	$40.03	$0.40
Handle issues including conditioning, facility, cable&pair	1	0.600				0.60	$40.03	$0.40
Subtotal - INTERCONNECT SERVICE CENTER						**13.20**		**$8.81**
-LOOP PROVISIONING CENTER (LPC)								
.4 weighting is probability a Loop order will fall out for manual assistance.								
Clear RMA (Request for manual assistance)	11.25	0.400				4.50	$37.78	$2.83
Subtotal - LOOP PROVISIONING CENTER (LPC)						**4.50**		**$2.83**
-DESIGN								
Probabilities are % manual work required. Reciprocal is mechanization rate.								
Order handling/screening	5	0.200				1.00	$44.31	$0.74
GOC (Generic Order Control) order log	6	0.200				1.20	$44.31	$0.89
Enter WA (Work Authorization) mask	5	0.100				0.50	$44.31	$0.37
Prepare loop input/DRI (Design Related Information)	10	0.200				2.00	$44.31	$1.48
Circuit design	20	0.100				2.00	$44.31	$1.48
Distribute WORD (Work Order Record Detail) document	2	0.050				0.10	$44.31	$0.07
Subtotal - DESIGN						**6.80**		**$5.02**
-CO								
1 probability is for CO work at serving wirecenter.								
ANALYZE ORDER	5	1.000				5.00	$43.81	$3.65
1 JUMPER	4	1.000				4.00	$43.81	$2.92
TEST CIRCUIT	15	1.000				15.00	$43.81	$10.95
COMPLETE IN WFA-DI	2	1.000				2.00	$43.81	$1.46
COMPLETE ORDER WITH CCT-I	3	1.000				3.00	$43.81	$2.19
.51 probability is percent DS0 EEL is ordered with DS0 interoffice. CO work at end office.								
ANALYZE ORDER	5	1.000	0.510			2.55	$43.81	$1.86
1 JUMPER	4	1.000	0.510			2.04	$43.81	$1.49
TEST CIRCUIT	15	1.000				15.00	$43.81	$10.95
COMPLETE IN WFA-DI	2	1.000	0.510			1.02	$43.81	$0.74

Work Item	Time Minutes	Prob #1	Prob #2	Prob #3	Prob #4	Applied Time (Minutes)	Labor /Hour	Cost
A	B	C	D	E	F	G B * (C Thru F)	H	I H * (G/60)
DS0 ENHANCED EXTENDED LOOP EACH ADDITIONAL (con't)								
COMPLETE ORDER WITH CCT-I	3	1.000	0.510			1.53	$43.81	$1.12
Subtotal - CO						**51.14**		**$37.34**
-LOAD RESOURCE ADMINISTRATION CENTER (LRAC)								
Screen order	2	1.000				2.00	$37.78	$1.26
Load work request to technician	5	1.000				5.00	$37.78	$3.15
Close out work request with technician	3	1.000				3.00	$37.78	$1.89
Subtotal - LOAD RESOURCE ADMINISTRATION CENTER (LRAC,						**10.00**		**$6.30**
-INSTALLATION/FIELD TECHNICIAN								
0.2 probability is percent of time access/sac point work required.								
Complete AP/SAC (Access Point/Serving Area Connection) Point wiring	13	0.200				2.60	$42.68	$1.85
Complete performance/conformance testing	15	1.000				15.00	$42.68	$10.67
Report test results to CCT-I (Customer Communication Technician-Implementor)	2	1.000				2.00	$42.68	$1.42
Contact LRAC (Load Resource Administration Center) to close order	1	1.000				1.00	$42.68	$0.71
Subtotal - INSTALLATION/FIELD TECHNICIAN						**20.60**		**$14.65**
-SERVICE DELIVERY IMPLEMENTOR								
Screen WFA (Work Force Administration) for circuit	15	1.000				15.00	$43.81	$10.95
Verify LNO (Local Network Operation) completion	10	1.000				10.00	$43.81	$7.30
Complete performance testing	15	1.000				15.00	$43.81	$10.95
Complete circuit in WFA/C (Work Force Administration - Control Module)	10	1.000				10.00	$43.81	$7.30
Subtotal - SERVICE DELIVERY IMPLEMENTOR						**50.00**		**$36.51**
DISCONNECT								
-INTERCONNECT SERVICE CENTER								
Populate required fields	3	1.000				3.00	$40.03	$2.00
Input order into service order processor. Type and format order for billing and provisioning	5	1.000				5.00	$40.03	$3.34
Ensure order is successfully distributed to the systems and is ready for provisioning	3	1.000				3.00	$40.03	$2.00
Subtotal - INTERCONNECT SERVICE CENTER						**11.00**		**$7.34**
-DESIGN								
Probabilities are % manual work required. Reciprocal is mechanization rate.								
Order handling/screening	5	0.100				0.50	$44.31	$0.37
GOC (Generic Order Control) order log	6	0.100				0.60	$44.31	$0.44
Enter WA (Work Authorization) mask	5	0.100				0.50	$44.31	$0.37
Disconnect circuit	5	0.100				0.50	$44.31	$0.37

NONRECURRING COST DETAIL SUMMARY

Study Name: NONRECURRING ELEMENTS
Study Year: 2002
Analyst: Deffley/Eoriatti
Product Group: Interconnection

ENRC Version: 2.16
Date: 06/03/02

State: South Dakota

Work Item	Time Minutes	Prob #1	Prob #2	Prob #3	Prob #4	Applied Time (Minutes)	Labor /Hour	Cost
A	B	C	D	E	F	G	H	I
						B * (C Thru F)		H * (G/60)
DS0 ENHANCED EXTENDED LOOP EACH ADDITIONAL (con't)								
Distribute WORD (Work Order Record Detail) document	2	0.050				0.10	$44.31	$0.07
Subtotal - DESIGN						**2.20**		**$1.62**
-CENTRAL OFFICE FRAMES								
1 probability is for CO work at serving wirecenter.								
Analyze order	5	1.000				5.00	$43.81	$3.65
Remove cross-connect	2.3	1.000				2.30	$43.81	$1.68
Complete work request in WFA-DI (Work Force Administration - Dispatch In Module)	2	1.000				2.00	$43.81	$1.46
.51 probability is percent DS0 EEL is order with DS0 interoffice. CO work at end office.								
Analyze order	5	0.510				2.55	$43.81	$1.86
Remove cross-connect	2.3	0.510				1.17	$43.81	$0.86
Complete work request in WFA-DI (Work Force Administration - Dispatch In Module)	2	0.510				1.02	$43.81	$0.74
Subtotal - CENTRAL OFFICE FRAMES						**14.04**		**$10.25**
-SERVICE DELIVERY IMPLEMENTOR								
Screen WFA (Work Force Administration) for circuit	5	1.000				5.00	$43.81	$3.65
Complete circuit in WFA/C (Work Force Administration - Control Module)	5	1.000				5.00	$43.81	$3.65
Subtotal - SERVICE DELIVERY IMPLEMENTOR						**10.00**		**$7.30**
Total For Service:						**193.48**		**$137.98**

NONRECURRING COST DETAIL SUMMARY

Study Name: NONRECURRING ELEMENTS
Study Year: 2002
Analyst: Deffley/Eoriatti
Product Group: Interconnection

State: South Dakota

	Work Item	Time Minutes	Prob #1	Prob #2	Prob #3	Prob #4	Applied Time (Minutes)	Labor /Hour	Cost
	A	B	C	D	E	F	G	H	I
							B * (C Thru F)		H * (G/60)

DS0 ENHANCED EXTENDED LOOP EACH ADDITIONAL (con't)

		Cost Calculation		Cost Factor	Cost
		B	C	D	E
27947	**Direct Cost**				$137.98
27948					
27949					
27950					
27951					
27952	***Marketing & Business Fees***				
27953	Product Management Expense	D27953*E27947		0.019957	$2.75
27954	Sales Expense	D27954*E27947		0.011877	$1.64
27955	Product Advertising Expense	D27955*E27947		0.000000	$0.00
27956	Business Fees (Other Operating Taxes)	D27956*Sum(E27947:E27955)		0.001483	$0.21
27957	***Total Marketing & Business Fees***	Sum(E27947:E27956)			$4.60
27958					
27959	***Sub-Total Direct Cost & Marketing***	E27947+E27957			$142.58
27960					
27961	***Other Direct Expenses***				
27962	Network Operations	D27962*E27959		0.034832	$4.97
27963	Network Support Assets	D27963*E27959		0.014703	$2.10
27964	General Support Assets	D27964*E27959		0.088742	$12.65
27965	General Purpose Computers	D27965*E27959		0.043342	$6.18
27966	Uncollectible	D27966*E27959		0.003786	$0.54
27967	Accounting & Finance Expense	D27967*E27959		0.007346	$1.05
27968	Human Resources Expense	D27968*E27959		0.008294	$1.18
27969	Information Management Expense	D27969*E27959		0.070887	$10.11
27970	Intangibles	D27970*E27959		0.000000	$0.00
27971	***Total Other Direct Expenses***	Sum(E27962:E27970)			$38.77
27972					
27973	***TELRIC***	E27962+E27971			$181.36
27974					
27975	***Common***				
27976	Executive Expense	D27976*E27973		0.011267	$2.04
27977	Planning Expense	D27977*E27973		0.000525	$0.10
27978	External Relations Expense	D27978*E27973		0.037846	$6.86
27979	Legal Expense	D27979*E27973		0.004717	$0.86
27980	Other Procurement Expense	D27980*E27973		0.001860	$0.34
27981	Research & Development Expense	D27981*E27973		0.000006	$0.00
27982	Other General and Admin Expense	D27982*E27973		0.015064	$2.73
27983	***Common Costs***	Sum(E27976:E27982)			$12.93
27984					
27985	***TELRIC + Common Costs***	E27973+E27983			$194.28

Work Item	Time Minutes	Prob #1	Prob #2	Prob #3	Prob #4	Applied Time (Minutes)	Labor /Hour	Cost
A	B	C	D	E	F	G B * (C Thru F)	H	I H * (G/60)
DS1 ENHANCED EXTENDED LOOP FIRST								
ADD								
-INTERCONNECT SERVICE CENTER								
.6 probability is percent of time this activity will occur.								
Review LSR for completeness and accuracy, contractual entries	3	1.000				3.00	$40.03	$2.00
Verify Connecting Facility Assignment (CFA) for facility/circuit availability	1	1.000				1.00	$40.03	$0.67
Exchange info, obtain CO, name, address, office type. Access Telephone Address Guide to obta	4	1.000				4.00	$40.03	$2.67
CPPD look-up billing USOC's for co-provider	2	1.000				2.00	$40.03	$1.33
Summary Bill List-Look up Billing Telephone Number, tax code, and bill date	2	1.000				2.00	$40.03	$1.33
Determine critical dates	1	1.000				1.00	$40.03	$0.67
Populate required fields	3	1.000				3.00	$40.03	$2.00
Type, review and submit to customer the Firm Order Confirmation (FOC)	3	1.000				3.00	$40.03	$2.00
Input order into service order processor. Type and format order for billing and provisioning	10	1.000				10.00	$40.03	$6.67
Ensure order is successfully distributed to the systems and is ready for provisioning	3	1.000				3.00	$40.03	$2.00
Handle calls from other departments working the order	5	0.600				3.00	$40.03	$2.00
Handle issues including conditioning, facility, cable&pair	5	0.600				3.00	$40.03	$2.00
Subtotal - INTERCONNECT SERVICE CENTER						**38.00**		**$25.35**
-DESIGN								
Probabilities are % manual work required. Reciprocal is mechanization rate.								
ORDER HANDLING/SCREENING	5	0.200				1.00	$44.31	$0.74
GOC ORDER LOG	6	0.200				1.20	$44.31	$0.89
ENTER WA MASK	5	0.800				4.00	$44.31	$2.95
PREP LOOP INPUT/DRI	15	0.750				11.25	$44.31	$8.31
CIRCUIT DESIGN	30	1.000				30.00	$44.31	$22.16
DISTRIBUTE WORD DOC	2	0.900				1.80	$44.31	$1.33
Subtotal - DESIGN						**49.25**		**$36.37**
-CENTRAL OFFICE FRAMES								
1 probability is for CO work at serving wirecenter.								
ANALYZE ORDER	5	1.000				5.00	$43.81	$3.65
COMPLETE LOOP QUALIFICATION	5	1.000				5.00	$43.81	$3.65
COMPLETE CROSS-CONNECT	4	1.000				4.00	$43.81	$2.92
CONTINUITY/STRESS TESTS	15	1.000				15.00	$43.81	$10.95
POST COMPLETE IN WFADI	2	1.000				2.00	$43.81	$1.46
.4 probability is percent DS1 EEL is order with DS1 interoffice. CO work at end office.								
ANALYZE ORDER	5	0.400				2.00	$43.81	$1.46
COMPLETE LOOP QUALIFICATION	5	0.400				2.00	$43.81	$1.46
COMPLETE CROSS-CONNECT	4	0.400				1.60	$43.81	$1.17
CONTINUITY/STRESS TESTS	15	0.400				6.00	$43.81	$4.38

Work Item	Time Minutes	Prob #1	Prob #2	Prob #3	Prob #4	Applied Time (Minutes)	Labor /Hour	Cost
A	B	C	D	E	F	G B * (C Thru F)	H	I H * (G/60)
DS1 ENHANCED EXTENDED LOOP FIRST (con't)								
POST COMPLETE IN WFADI	2	0.400				0.80	$43.81	$0.58
Subtotal - CENTRAL OFFICE FRAMES						**43.40**		**$31.69**
-LRAC								
SCREEN ORDER	2	1.000				2.00	$37.78	$1.26
LOAD WORK REQUEST TO TECH	5	1.000				5.00	$37.78	$3.15
CLOSE OUT WORK REQUEST	3	1.000				3.00	$37.78	$1.89
COMPLETE WORK IN WFADO	3	1.000				3.00	$37.78	$1.89
Subtotal - LRAC						**13.00**		**$8.19**
-INSTALLATION/FIELD TECHNICIAN								
TRAVEL TIME	21	1.000				21.00	$42.68	$14.94
0.2 probability is percent of time access/sac point work required.								
AP/SAC POINT WORK	13	0.200				2.60	$42.68	$1.85
CONTACT CCTI TO WORK ORDER	3	1.000				3.00	$42.68	$2.13
COMPLETE CONTINUITY TESTING	15	1.000				15.00	$42.68	$10.67
REPORT TEST RESULTS TO CCTI	2	1.000				2.00	$42.68	$1.42
COMPLETE WITH LRAC	3	1.000				3.00	$42.68	$2.13
Subtotal - INSTALLATION/FIELD TECHNICIAN						**46.60**		**$33.15**
-SERVICE DELIVERY IMPLEMENTOR								
SCREEN WFA FOR CIRCUIT	15	1.000				15.00	$43.81	$10.95
VERIFY LNO FOR CIRCUIT	10	1.000				10.00	$43.81	$7.30
TEST CIRCUIT	35	1.000				35.00	$43.81	$25.56
NOTIFY CUSTOMER	5	1.000				5.00	$43.81	$3.65
COMPLETE CIRCUIT IN WFA/C	10	1.000				10.00	$43.81	$7.30
Subtotal - SERVICE DELIVERY IMPLEMENTOR						**75.00**		**$54.76**
DISCONNECT								
-INTERCONNECT SERVICE CENTER								
Review LSR for completeness and accuracy, contractual entries	3	1.000				3.00	$40.03	$2.00
Verify existing account (access CSR in BOSS/CARS) and obtain closing bill address.	2	1.000				2.00	$40.03	$1.33
Type, review and submit to customer the Firm Order Confirmation (FOC)	2	1.000				2.00	$40.03	$1.33
Input order into service order processor. Type and format order for billing and provisioning	10	1.000				10.00	$40.03	$6.67
Populate required fields	3	1.000				3.00	$40.03	$2.00
Ensure order is successfully distributed to the systems and is ready for provisioning	3	1.000				3.00	$40.03	$2.00
Subtotal - INTERCONNECT SERVICE CENTER						**23.00**		**$15.34**

Study Name: NONRECURRING ELEMENTS
Study Year: 2002
Analyst: Deffley/Eoriatti
Product Group: Interconnection

ENRC Version: 2.16
Date: 06/03/02

State: South Dakota

Work Item	Time Minutes	Prob #1	Prob #2	Prob #3	Prob #4	Applied Time (Minutes)	Labor /Hour	Cost
A	B	C	D	E	F	G	H	I
						B * (C Thru F)		H * (G/60)
DS1 ENHANCED EXTENDED LOOP FIRST (con't)								
-DESIGN								
Probabilities are % manual work required. Reciprocal is mechanization rate.								
ORDER HANDLING/SCREEN	5	0.100				0.50	$44.31	$0.37
GOC ORDER LOG	6	0.100				0.60	$44.31	$0.44
ENTER WA MASK	5	0.100				0.50	$44.31	$0.37
DISCONNECT CIRCUIT	5	0.100				0.50	$44.31	$0.37
DISTRIBUTE WORD DOC	2	0.100				0.20	$44.31	$0.15
Subtotal - DESIGN						**2.30**		**$1.70**
-CENTRAL OFFICE FRAMES								
1 probability is for CO work at serving wirecenter.								
ANALYZE ORDER	5	1.000				5.00	$43.81	$3.65
REMOVE JUMPER	2.3	1.000				2.30	$43.81	$1.68
COMPETE WORK IN WFADI	2	1.000				2.00	$43.81	$1.46
.4 probability is percent DS1 EEL is order with DS1 interoffice. CO work at end office.								
ANALYZE ORDER	5	0.400				2.00	$43.81	$1.46
REMOVE JUMPER	2.3	0.400				0.92	$43.81	$0.67
COMPETE WORK IN WFADI	2	0.400				0.80	$43.81	$0.58
Subtotal - CENTRAL OFFICE FRAMES						**13.02**		**$9.51**
-SERVICE DELIVERY IMPLEMENTOR								
SCREEN WFA FOR CIRCUIT	5	1.000				5.00	$43.81	$3.65
CONTACT CUSTOMER	5	1.000				5.00	$43.81	$3.65
COMPLETE CIRCUIT IN WFA/C	5	1.000				5.00	$43.81	$3.65
Subtotal - SERVICE DELIVERY IMPLEMENTOR						**15.00**		**$10.95**
Total For Service:						**318.57**		**$227.01**

Study Name: NONRECURRING ELEMENTS
Study Year: 2002
Analyst: Deffley/Eoriatti
Product Group: Interconnection

State: South Dakota

	Work Item	Time Minutes	Prob #1	Prob #2	Prob #3	Prob #4	Applied Time (Minutes)	Labor /Hour	Cost
	A	B	C	D	E	F	G B * (C Thru F)	H	I H * (G/60)

DS1 ENHANCED EXTENDED LOOP FIRST (con't)

		Cost Calculation		Cost Factor	Cost
		B	C	D	E
28127	**Direct Cost**				$227.01
28128					
28129					
28130					
28131					
28132	***Marketing & Business Fees***				
28133	Product Management Expense	D28133*E28127		0.019957	$4.53
28134	Sales Expense	D28134*E28127		0.011877	$2.70
28135	Product Advertising Expense	D28135*E28127		0.000000	$0.00
28136	Business Fees (Other Operating Taxes)	D28136*Sum(E28127:E28135]		0.001483	$0.35
28137	***Total Marketing & Business Fees***	Sum(E28127:E28136)			$7.57
28138					
28139	***Sub-Total Direct Cost & Marketing***	E28127+E28137			$234.59
28140					
28141	***Other Direct Expenses***				
28142	Network Operations	D28142*E28139		0.034832	$8.17
28143	Network Support Assets	D28143*E28139		0.014703	$3.45
28144	General Support Assets	D28144*E28139		0.088742	$20.82
28145	General Purpose Computers	D28145*E28139		0.043342	$10.17
28146	Uncollectible	D28146*E28139		0.003786	$0.89
28147	Accounting & Finance Expense	D28147*E28139		0.007346	$1.72
28148	Human Resources Expense	D28148*E28139		0.008294	$1.95
28149	Information Management Expense	D28149*E28139		0.070887	$16.63
28150	Intangibles	D28150*E28139		0.000000	$0.00
28151	***Total Other Direct Expenses***	Sum(E28142:E28150]			$63.79
28152					
28153	***TELRIC***	E28142+E28151			$298.38
28154					
28155	***Common***				
28156	Executive Expense	D28156*E28153		0.011267	$3.36
28157	Planning Expense	D28157*E28153		0.000525	$0.16
28158	External Relations Expense	D28158*E28153		0.037846	$11.29
28159	Legal Expense	D28159*E28153		0.004717	$1.41
28160	Other Procurement Expense	D28160*E28153		0.001860	$0.55
28161	Research & Development Expense	D28161*E28153		0.000006	$0.00
28162	Other General and Admin Expense	D28162*E28153		0.015064	$4.49
28163	***Common Costs***	Sum(E28156:E28162)			$21.27
28164					
28165	***TELRIC + Common Costs***	E28153+E28163			$319.65

NONRECURRING COST DETAIL SUMMARY

Study Name: NONRECURRING ELEMENTS
Study Year: 2002
Analyst: Deffley/Eoriatti
Product Group: Interconnection

ENRC Version: 2.16
Date: 06/03/02

State: South Dakota

Work Item	Time Minutes	Prob #1	Prob #2	Prob #3	Prob #4	Applied Time (Minutes)	Labor /Hour	Cost
A	B	C	D	E	F	G B * (C Thru F)	H	I H * (G/60)
DS1 ENHANCED EXTENDED LOOP EACH ADDIDTIONAL								
ADD								
-INTERCONNECT SERVICE CENTER								
.6 probability is percent of time this activity will occur.								
Verify Connecting Facility Assignment (CFA) for facility/circuit availability	1	1.000				1.00	$40.03	$0.67
Populate required fields	3	1.000				3.00	$40.03	$2.00
Input order into service order processor. Type and format order for billing and provisioning	5	1.000				5.00	$40.03	$3.34
Ensure order is successfully distributed to the systems and is ready for provisioning	3	1.000				3.00	$40.03	$2.00
Handle calls from other departments working the order	1	0.600				0.60	$40.03	$0.40
Handle issues including conditioning, facility, cable&pair	1	0.600				0.60	$40.03	$0.40
Subtotal - INTERCONNECT SERVICE CENTER						**13.20**		**$8.81**
-DESIGN								
Probabilities are % manual work required. Reciprocal is mechanization rate.								
ORDER HANDLING/SCREENING	5	0.200				1.00	$44.31	$0.74
GOC ORDER LOG	6	0.200				1.20	$44.31	$0.89
ENTER WA MASK	5	0.800				4.00	$44.31	$2.95
PREP LOOP INPUT/DRI	15	0.750				11.25	$44.31	$8.31
CIRCUIT DESIGN	30	1.000				30.00	$44.31	$22.16
DISTRIBUTE WORD DOC	2	0.900				1.80	$44.31	$1.33
Subtotal - DESIGN						**49.25**		**$36.37**
-CENTRAL OFFICE FRAMES								
1 probability is for CO work at serving wirecenter.								
ANALYZE ORDER	5	1.000				5.00	$43.81	$3.65
COMPLETE LOOP QUALIFICATION	5	1.000				5.00	$43.81	$3.65
COMPLETE CROSS-CONNECT	4	1.000				4.00	$43.81	$2.92
CONTINUITY/STRESS TESTS	15	1.000				15.00	$43.81	$10.95
POST COMPLETE IN WFADI	2	1.000				2.00	$43.81	$1.46
.4 probability is percent DS1 EEL is order with DS1 interoffice. CO work at end office.								
ANALYZE ORDER	5	0.400				2.00	$43.81	$1.46
COMPLETE LOOP QUALIFICATION	5	0.400				2.00	$43.81	$1.46
COMPLETE CROSS-CONNECT	4	0.400				1.60	$43.81	$1.17
CONTINUITY/STRESS TESTS	15	0.400				6.00	$43.81	$4.38
POST COMPLETE IN WFADI	2	0.400				0.80	$43.81	$0.58
Subtotal - CENTRAL OFFICE FRAMES						**43.40**		**$31.69**
-LRAC								
SCREEN ORDER	2	1.000				2.00	$37.78	$1.26

Work Item	Time Minutes	Prob #1	Prob #2	Prob #3	Prob #4	Applied Time (Minutes)	Labor /Hour	Cost
A	B	C	D	E	F	G B * (C Thru F)	H	I H * (G/60)
DS1 ENHANCED EXTENDED LOOP EACH ADDIDTIONAL (con't)								
LOAD WORK REQUEST TO TECH	5	1.000				5.00	$37.78	$3.15
CLOSE OUT WORK REQUEST	3	1.000				3.00	$37.78	$1.89
COMPLETE WORK IN WFADO	3	1.000				3.00	$37.78	$1.89
Subtotal - LRAC						**13.00**		**$8.19**
-INSTALLATION/FIELD TECHNICIAN								
0.2 probability is percent of time access/sac point work required.								
AP/SAC POINT WORK	13	0.200				2.60	$42.68	$1.85
COMPLETE CONTINUITY TESTING	15	1.000				15.00	$42.68	$10.67
REPORT TEST RESULTS TO CCTI	2	1.000				2.00	$42.68	$1.42
COMPLETE WITH LRAC	1	1.000				1.00	$42.68	$0.71
Subtotal - INSTALLATION/FIELD TECHNICIAN						**20.60**		**$14.65**
-SERVICE DELIVERY IMPLEMENTOR								
SCREEN WFA FOR CIRCUIT	15	1.000				15.00	$43.81	$10.95
VERIFY LNO FOR CIRCUIT	10	1.000				10.00	$43.81	$7.30
TEST CIRCUIT	35	1.000				35.00	$43.81	$25.56
COMPLETE CIRCUIT IN WFA/C	10	1.000				10.00	$43.81	$7.30
Subtotal - SERVICE DELIVERY IMPLEMENTOR						**70.00**		**$51.11**
DISCONNECT								
-INTERCONNECT SERVICE CENTER								
Populate required fields	3	1.000				3.00	$40.03	$2.00
Input order into service order processor. Type and format order for billing and provisioning	5	1.000				5.00	$40.03	$3.34
Ensure order is successfully distributed to the systems and is ready for provisioning	3	1.000				3.00	$40.03	$2.00
Subtotal - INTERCONNECT SERVICE CENTER						**11.00**		**$7.34**
-DESIGN								
Probabilities are % manual work required. Reciprocal is mechanization rate.								
ORDER HANDLING/SCREEN	5	0.100				0.50	$44.31	$0.37
GOC ORDER LOG	6	0.100				0.60	$44.31	$0.44
ENTER WA MASK	5	0.100				0.50	$44.31	$0.37
DISCONNECT CIRCUIT	5	0.100				0.50	$44.31	$0.37
DISTRIBUTE WORD DOC	2	0.100				0.20	$44.31	$0.15
Subtotal - DESIGN						**2.30**		**$1.70**
-CENTRAL OFFICE FRAMES								

NONRECURRING COST DETAIL SUMMARY

Study Name: NONRECURRING ELEMENTS
Study Year: 2002
Analyst: Deffley/Eoriatti
Product Group: Interconnection

State: South Dakota

Work Item	Time Minutes	Prob #1	Prob #2	Prob #3	Prob #4	Applied Time (Minutes)	Labor /Hour	Cost
A	B	C	D	E	F	G	H	I
						B * (C Thru F)		H * (G/60)
DS1 ENHANCED EXTENDED LOOP EACH ADDIDTIONAL (con't)								
1 probability is for CO work at serving wirecenter.								
ANALYZE ORDER	5	1.000				5.00	$43.81	$3.65
REMOVE JUMPER	2.3	1.000				2.30	$43.81	$1.68
COMPETE WORK IN WFADI	2	1.000				2.00	$43.81	$1.46
.4 probability is percent DS1 EEL is order with DS1 interoffice. CO work at end office.								
ANALYZE ORDER	5	0.400				2.00	$43.81	$1.46
REMOVE JUMPER	2.3	0.400				0.92	$43.81	$0.67
COMPETE WORK IN WFADI	2	0.400				0.80	$43.81	$0.58
Subtotal - CENTRAL OFFICE FRAMES						**13.02**		**$9.51**
Total For Service:						**235.77**		**$169.36**

NONRECURRING COST DETAIL SUMMARY

Study Name: NONRECURRING ELEMENTS
Study Year: 2002
Analyst: Deffley/Eoriatti
Product Group: Interconnection

State: South Dakota

	Work Item	Time Minutes	Prob #1	Prob #2	Prob #3	Prob #4	Applied Time (Minutes)	Labor /Hour	Cost
	A	B	C	D	E	F	G	H	I
							B * (C Thru F)		H * (G/60)

DS1 ENHANCED EXTENDED LOOP EACH ADDIDTIONAL (con't)

28307	**Direct Cost**					$169.36
28308						
28309		**Cost Calculation**			**Cost Factor**	**Cost**
28310		**B**		**C**	**D**	**E**
28311						
28312	***Marketing & Business Fees***					
28313	Product Management Expense	**D28313*E28307**			0.019957	$3.38
28314	Sales Expense	**D28314*E28307**			0.011877	$2.01
28315	Product Advertising Expense	**D28315*E28307**			0.000000	$0.00
28316	Business Fees (Other Operating Taxes)	**D28316*Sum(E28307:E28315)**			0.001483	$0.26
28317	***Total Marketing & Business Fees***	**Sum(E28307:E28316)**				$5.65
28318						
28319	***Sub-Total Direct Cost & Marketing***	**E28307+E28317**				$175.01
28320						
28321	***Other Direct Expenses***					
28322	Network Operations	**D28322*E28319**			0.034832	$6.10
28323	Network Support Assets	**D28323*E28319**			0.014703	$2.57
28324	General Support Assets	**D28324*E28319**			0.088742	$15.53
28325	General Purpose Computers	**D28325*E28319**			0.043342	$7.59
28326	Uncollectible	**D28326*E28319**			0.003786	$0.66
28327	Accounting & Finance Expense	**D28327*E28319**			0.007346	$1.29
28328	Human Resources Expense	**D28328*E28319**			0.008294	$1.45
28329	Information Management Expense	**D28329*E28319**			0.070887	$12.41
28330	Intangibles	**D28330*E28319**			0.000000	$0.00
28331	***Total Other Direct Expenses***	**Sum(E28322:E28330)**				$47.59
28332						
28333	***TELRIC***	**E28322+E28331**				$222.60
28334						
28335	***Common***					
28336	Executive Expense	**D28336*E28333**			0.011267	$2.51
28337	Planning Expense	**D28337*E28333**			0.000525	$0.12
28338	External Relations Expense	**D28338*E28333**			0.037846	$8.42
28339	Legal Expense	**D28339*E28333**			0.004717	$1.05
28340	Other Procurement Expense	**D28340*E28333**			0.001860	$0.41
28341	Research & Development Expense	**D28341*E28333**			0.000006	$0.00
28342	Other General and Admin Expense	**D28342*E28333**			0.015064	$3.35
28343	***Common Costs***	**Sum(E28336:E28342)**				$15.87
28344						
28345	***TELRIC + Common Costs***	**E28333+E28343**				$238.47

NONRECURRING COST DETAIL SUMMARY

Study Name: NONRECURRING ELEMENTS
Study Year: 2002
Analyst: Deffley/Eoriatti
Product Group: Interconnection

State: South Dakota

Work Item	Time Minutes	Prob #1	Prob #2	Prob #3	Prob #4	Applied Time (Minutes)	Labor /Hour	Cost
A	B	C	D	E	F	G B * (C Thru F)	H	I H * (G/60)
DS3/OC3/OC12/OC48 ENHANCED EXTENDED LOOP FIRST								
ADD								
-INTERCONNECT SERVICE CENTER								
.6 probability is percent of time this activity will occur.								
Review LSR for completeness and accuracy, contractual entries	3	1.000				3.00	$40.03	$2.00
Verify Connecting Facility Assignment (CFA) for facility/circuit availability	1	1.000				1.00	$40.03	$0.67
Exchange info, obtain CO, name, address, office type. Access Telephone Address Guide to obta	4	1.000				4.00	$40.03	$2.67
CPPD look-up billing USOC's for co-provider	2	1.000				2.00	$40.03	$1.33
Summary Bill List-Look up Billing Telephone Number, tax code, and bill date	2	1.000				2.00	$40.03	$1.33
Determine critical dates	1	1.000				1.00	$40.03	$0.67
Populate required fields	3	1.000				3.00	$40.03	$2.00
Type, review and submit to customer the Firm Order Confirmation (FOC)	3	1.000				3.00	$40.03	$2.00
Input order into service order processor. Type and format order for billing and provisioning	10	1.000				10.00	$40.03	$6.67
Ensure order is successfully distributed to the systems and is ready for provisioning	3	1.000				3.00	$40.03	$2.00
Handle calls from other departments working the order	5	0.600				3.00	$40.03	$2.00
Handle issues including conditioning, facility, cable&pair	5	0.600				3.00	$40.03	$2.00
Subtotal - INTERCONNECT SERVICE CENTER						**38.00**		**$25.35**
-DESIGN								
Probabilities are % manual work required. Reciprocal is mechanization rate.								
ORDER HANDLING/SCREENING	5	0.200				1.00	$44.31	$0.74
GOC ORDER LOG	6	0.200				1.20	$44.31	$0.89
ENTER WA MASK	5	0.800				4.00	$44.31	$2.95
PREP LOOP INPUT/DRI	15	0.750				11.25	$44.31	$8.31
CIRCUIT DESIGN	30	1.000				30.00	$44.31	$22.16
DISTRIBUTE WORD DOC	2	0.900				1.80	$44.31	$1.33
Subtotal - DESIGN						**49.25**		**$36.37**
-CENTRAL OFFICE FRAMES								
2 probability is work performed in two offices.								
ANALYZE ORDER	5	2.000				10.00	$43.81	$7.30
COMPLETE LOOP QUALIFICATION	5	2.000				10.00	$43.81	$7.30
COMPLETE CROSS-CONNECT	4	2.000				8.00	$43.81	$5.84
CONTINUITY/STRESS TESTS	15	2.000				30.00	$43.81	$21.91
POST COMPLETE IN WFADI	2	2.000				4.00	$43.81	$2.92
Subtotal - CENTRAL OFFICE FRAMES						**62.00**		**$45.27**
-LRAC								
SCREEN ORDER	2	1.000				2.00	$37.78	$1.26

NONRECURRING COST DETAIL SUMMARY

Study Name: NONRECURRING ELEMENTS
Study Year: 2002
Analyst: Deffley/Eoriatti
Product Group: Interconnection

State: South Dakota

Work Item	Time Minutes	Prob #1	Prob #2	Prob #3	Prob #4	Applied Time (Minutes)	Labor /Hour	Cost
A	B	C	D	E	F	G	H	I
						B * (C Thru F)		H * (G/60)
DS3/OC3/OC12/OC48 ENHANCED EXTENDED LOOP FIRST (con't)								
LOAD WORK REQUEST TO TECH	5	1.000				5.00	$37.78	$3.15
CLOSE OUT WORK REQUEST	3	1.000				3.00	$37.78	$1.89
COMPLETE WORK IN WFADO	3	1.000				3.00	$37.78	$1.89
Subtotal - LRAC						**13.00**		**$8.19**
-INSTALLATION/FIELD TECHNICIAN								
TRAVEL TIME	21	1.000				21.00	$42.68	$14.94
0.2 probability is percent of time access/sac point work required.								
AP/SAC POINT WORK	13	0.200				2.60	$42.68	$1.85
CONTACT CCTI TO WORK ORDER	3	1.000				3.00	$42.68	$2.13
COMPLETE CONTINUITY TESTING	15	1.000				15.00	$42.68	$10.67
REPORT TEST RESULTS TO CCTI	2	1.000				2.00	$42.68	$1.42
COMPLETE WITH LRAC	3	1.000				3.00	$42.68	$2.13
Subtotal - INSTALLATION/FIELD TECHNICIAN						**46.60**		**$33.15**
-SERVICE DELIVERY IMPLEMENTOR								
SCREEN WFA FOR CIRCUIT	15	1.000				15.00	$43.81	$10.95
VERIFY LNO FOR CIRCUIT	10	1.000				10.00	$43.81	$7.30
TEST CIRCUIT	35	1.000				35.00	$43.81	$25.56
NOTIFY CUSTOMER	5	1.000				5.00	$43.81	$3.65
COMPLETE CIRCUIT IN WFA/C	10	1.000				10.00	$43.81	$7.30
Subtotal - SERVICE DELIVERY IMPLEMENTOR						**75.00**		**$54.76**
DISCONNECT								
-INTERCONNECT SERVICE CENTER								
Review LSR for completeness and accuracy, contractual entries	3	1.000				3.00	$40.03	$2.00
Verify existing account (access CSR in BOSS/CARS) and obtain closing bill address.	2	1.000				2.00	$40.03	$1.33
Type, review and submit to customer the Firm Order Confirmation (FOC)	2	1.000				2.00	$40.03	$1.33
Input order into service order processor. Type and format order for billing and provisioning	10	1.000				10.00	$40.03	$6.67
Populate required fields	3	1.000				3.00	$40.03	$2.00
Ensure order is successfully distributed to the systems and is ready for provisioning	3	1.000				3.00	$40.03	$2.00
Subtotal - INTERCONNECT SERVICE CENTER						**23.00**		**$15.34**
-DESIGN								
Probabilities are % manual work required. Reciprocal is mechanization rate.								
ORDER HANDLING/SCREEN	5	0.100				0.50	$44.31	$0.37
GOC ORDER LOG	6	0.100				0.60	$44.31	$0.44
ENTER WA MASK	5	0.100				0.50	$44.31	$0.37

NONRECURRING COST DETAIL SUMMARY

Study Name: NONRECURRING ELEMENTS
Study Year: 2002
Analyst: Deffley/Eoriatti
Product Group: Interconnection

ENRC Version: 2.16
Date: 06/03/02

State: South Dakota

Work Item	Time Minutes	Prob #1	Prob #2	Prob #3	Prob #4	Applied Time (Minutes)	Labor /Hour	Cost
A	B	C	D	E	F	G B * (C Thru F)	H	I H * (G/60)
DS3/OC3/OC12/OC48 ENHANCED EXTENDED LOOP FIRST (con't)								
DISCONNECT CIRCUIT	5	0.100				0.50	$44.31	$0.37
DISTRIBUTE WORD DOC	2	0.100				0.20	$44.31	$0.15
Subtotal - DESIGN						**2.30**		**$1.70**
-CENTRAL OFFICE FRAMES								
2 probability is work performed in two offices.								
ANALYZE ORDER	5	2.000				10.00	$43.81	$7.30
REMOVE JUMPER	2.3	2.000				4.60	$43.81	$3.36
COMPETE WORK IN WFADI	2	2.000				4.00	$43.81	$2.92
Subtotal - CENTRAL OFFICE FRAMES						**18.60**		**$13.58**
-SERVICE DELIVERY IMPLEMENTOR								
SCREEN WFA FOR CIRCUIT	5	1.000				5.00	$43.81	$3.65
CONTACT CUSTOMER	5	1.000				5.00	$43.81	$3.65
COMPLETE CIRCUIT IN WFA/C	5	1.000				5.00	$43.81	$3.65
Subtotal - SERVICE DELIVERY IMPLEMENTOR						**15.00**		**$10.95**
Total For Service:						**342.75**		**$244.67**

NONRECURRING COST DETAIL SUMMARY

Study Name: NONRECURRING ELEMENTS
Study Year: 2002
Analyst: Deffley/Eoriatti
Product Group: Interconnection

State: South Dakota

	Work Item	Time Minutes	Prob #1	Prob #2	Prob #3	Prob #4	Applied Time (Minutes)	Labor /Hour	Cost
	A	B	C	D	E	F	G	H	I
							B * (C Thru F)		H * (G/60)

DS3/OC3/OC12/OC48 ENHANCED EXTENDED LOOP FIRST (con't)

		Cost Calculation		Cost Factor	Cost
		B	C	D	E
28487	**Direct Cost**				$244.67
28488					
28489					
28490					
28491					
28492	***Marketing & Business Fees***				
28493	Product Management Expense	D28493*E28487		0.019957	$4.88
28494	Sales Expense	D28494*E28487		0.011877	$2.91
28495	Product Advertising Expense	D28495*E28487		0.000000	$0.00
28496	Business Fees (Other Operating Taxes)	D28496*Sum(E28487:E28495]		0.001483	$0.37
28497	***Total Marketing & Business Fees***	Sum(E28487:E28496]			$8.16
28498					
28499	***Sub-Total Direct Cost & Marketing***	E28487+E28497			$252.83
28500					
28501	***Other Direct Expenses***				
28502	Network Operations	D28502*E28499		0.034832	$8.81
28503	Network Support Assets	D28503*E28499		0.014703	$3.72
28504	General Support Assets	D28504*E28499		0.088742	$22.44
28505	General Purpose Computers	D28505*E28499		0.043342	$10.96
28506	Uncollectible	D28506*E28499		0.003786	$0.96
28507	Accounting & Finance Expense	D28507*E28499		0.007346	$1.86
28508	Human Resources Expense	D28508*E28499		0.008294	$2.10
28509	Information Management Expense	D28509*E28499		0.070887	$17.92
28510	Intangibles	D28510*E28499		0.000000	$0.00
28511	***Total Other Direct Expenses***	Sum(E28502:E28510]			$68.75
28512					
28513	***TELRIC***	E28502+E28511			$321.58
28514					
28515	***Common***				
28516	Executive Expense	D28516*E28513		0.011267	$3.62
28517	Planning Expense	D28517*E28513		0.000525	$0.17
28518	External Relations Expense	D28518*E28513		0.037846	$12.17
28519	Legal Expense	D28519*E28513		0.004717	$1.52
28520	Other Procurement Expense	D28520*E28513		0.001860	$0.60
28521	Research & Development Expense	D28521*E28513		0.000006	$0.00
28522	Other General and Admin Expense	D28522*E28513		0.015064	$4.84
28523	***Common Costs***	Sum(E28516:E28522]			$22.92
28524					
28525	***TELRIC + Common Costs***	E28513+E28523			$344.51

NONRECURRING COST DETAIL SUMMARY

Study Name: NONRECURRING ELEMENTS
Study Year: 2002
Analyst: Deffley/Eoriatti
Product Group: Interconnection

State: South Dakota

ENRC Version: 2.16
Date: 06/03/02

Work Item	Time Minutes	Prob #1	Prob #2	Prob #3	Prob #4	Applied Time (Minutes)	Labor /Hour	Cost
A	B	C	D	E	F	G B * (C Thru F)	H	I H * (G/60)
DS3/OC3/OC12/OC48 ENHANCED EXTENDED LOOP EACH ADDIDTIONAL								
ADD								
-INTERCONNECT SERVICE CENTER								
.6 probability is percent of time this activity will occur.								
Verify Connecting Facility Assignment (CFA) for facility/circuit availability	1	1.000				1.00	$40.03	$0.67
Populate required fields	3	1.000				3.00	$40.03	$2.00
Input order into service order processor. Type and format order for billing and provisioning	5	1.000				5.00	$40.03	$3.34
Ensure order is successfully distributed to the systems and is ready for provisioning	3	1.000				3.00	$40.03	$2.00
Handle calls from other departments working the order	1	0.600				0.60	$40.03	$0.40
Handle issues including conditioning, facility, cable&pair	1	0.600				0.60	$40.03	$0.40
Subtotal - INTERCONNECT SERVICE CENTER						**13.20**		**$8.81**
-DESIGN								
Probabilities are % manual work required. Reciprocal is mechanization rate.								
ORDER HANDLING/SCREENING	5	0.200				1.00	$44.31	$0.74
GOC ORDER LOG	6	0.200				1.20	$44.31	$0.89
ENTER WA MASK	5	0.800				4.00	$44.31	$2.95
PREP LOOP INPUT/DRI	15	0.750				11.25	$44.31	$8.31
CIRCUIT DESIGN	30	1.000				30.00	$44.31	$22.16
DISTRIBUTE WORD DOC	2	0.900				1.80	$44.31	$1.33
Subtotal - DESIGN						**49.25**		**$36.37**
-CENTRAL OFFICE FRAMES								
2 probability is work performed in two offices.								
ANALYZE ORDER	5	2.000				10.00	$43.81	$7.30
COMPLETE LOOP QUALIFICATION	5	2.000				10.00	$43.81	$7.30
COMPLETE CROSS-CONNECT	4	2.000				8.00	$43.81	$5.84
CONTINUITY/STRESS TESTS	15	2.000				30.00	$43.81	$21.91
POST COMPLETE IN WFADI	2	2.000				4.00	$43.81	$2.92
Subtotal - CENTRAL OFFICE FRAMES						**62.00**		**$45.27**
-LRAC								
SCREEN ORDER	2	1.000				2.00	$37.78	$1.26
LOAD WORK REQUEST TO TECH	5	1.000				5.00	$37.78	$3.15
CLOSE OUT WORK REQUEST	3	1.000				3.00	$37.78	$1.89
COMPLETE WORK IN WFADO	3	1.000				3.00	$37.78	$1.89
Subtotal - LRAC						**13.00**		**$8.19**

Study Name: NONRECURRING ELEMENTS
Study Year: 2002
Analyst: Deffley/Eoriatti
Product Group: Interconnection

State: South Dakota

Work Item	Time Minutes	Prob #1	Prob #2	Prob #3	Prob #4	Applied Time (Minutes)	Labor /Hour	Cost
A	B	C	D	E	F	G B * (C Thru F)	H	I H * (G/60)
DS3/OC3/OC12/OC48 ENHANCED EXTENDED LOOP EACH ADDIDTIONAL (con't,								
-INSTALLATION/FIELD TECHNICIAN								
0.2 probability is percent of time access/sac point work required.								
AP/SAC POINT WORK	13	0.200				2.60	$42.68	$1.85
COMPLETE CONTINUITY TESTING	15	1.000				15.00	$42.68	$10.67
REPORT TEST RESULTS TO CCTI	2	1.000				2.00	$42.68	$1.42
COMPLETE WITH LRAC	1	1.000				1.00	$42.68	$0.71
Subtotal - INSTALLATION/FIELD TECHNICIAN						**20.60**		**$14.65**
-SERVICE DELIVERY IMPLEMENTOR								
SCREEN WFA FOR CIRCUIT	15	1.000				15.00	$43.81	$10.95
VERIFY LNO FOR CIRCUIT	10	1.000				10.00	$43.81	$7.30
TEST CIRCUIT	35	1.000				35.00	$43.81	$25.56
COMPLETE CIRCUIT IN WFA/C	10	1.000				10.00	$43.81	$7.30
Subtotal - SERVICE DELIVERY IMPLEMENTOR						**70.00**		**$51.11**
DISCONNECT								
-INTERCONNECT SERVICE CENTER								
Populate required fields	3	1.000				3.00	$40.03	$2.00
Input order into service order processor. Type and format order for billing and provisioning	5	1.000				5.00	$40.03	$3.34
Ensure order is successfully distributed to the systems and is ready for provisioning	3	1.000				3.00	$40.03	$2.00
Subtotal - INTERCONNECT SERVICE CENTER						**11.00**		**$7.34**
-DESIGN								
Probabilities are % manual work required. Reciprocal is mechanization rate.								
ORDER HANDLING/SCREEN	5	0.100				0.50	$44.31	$0.37
GOC ORDER LOG	6	0.100				0.60	$44.31	$0.44
ENTER WA MASK	5	0.100				0.50	$44.31	$0.37
DISCONNECT CIRCUIT	5	0.100				0.50	$44.31	$0.37
DISTRIBUTE WORD DOC	2	0.100				0.20	$44.31	$0.15
Subtotal - DESIGN						**2.30**		**$1.70**
-CENTRAL OFFICE FRAMES								
2 probability is work performed in two offices.								
ANALYZE ORDER	5	2.000				10.00	$43.81	$7.30
REMOVE JUMPER	2.3	2.000				4.60	$43.81	$3.36
COMPETE WORK IN WFADI	2	2.000				4.00	$43.81	$2.92
Subtotal - CENTRAL OFFICE FRAMES						**18.60**		**$13.58**

NONRECURRING COST DETAIL SUMMARY

Study Name: NONRECURRING ELEMENTS
Study Year: 2002
Analyst: Deffley/Eoriatti
Product Group: Interconnection

ENRC Version: 2.16
Date: 06/03/02

State: South Dakota

Work Item	Time Minutes	Prob #1	Prob #2	Prob #3	Prob #4	Applied Time (Minutes)	Labor /Hour	Cost
A	B	C	D	E	F	G B * (C Thru F)	H	I H * (G/60)
DS3/OC3/OC12/OC48 ENHANCED EXTENDED LOOP EACH ADDIDTIONAL (con't,								
Total For Service:						**259.95**		**$187.02**

NONRECURRING COST DETAIL SUMMARY

Study Name: NONRECURRING ELEMENTS
Study Year: 2002
Analyst: Deffley/Eoriatti
Product Group: Interconnection

State: South Dakota

	Work Item	Time Minutes	Prob #1	Prob #2	Prob #3	Prob #4	Applied Time (Minutes)	Labor /Hour	Cost
	A	B	C	D	E	F	G	H	I
							B * (C Thru F)		H * (G/60)

DS3/OC3/OC12/OC48 ENHANCED EXTENDED LOOP EACH ADDIDTIONAL (con't,

28667	**Direct Cost**				$187.02
28668					
28669		Cost Calculation		Cost Factor	Cost
28670		B	C	D	E
28671					
28672	***Marketing & Business Fees***				
28673	Product Management Expense	D28673*E28667		0.019957	$3.73
28674	Sales Expense	D28674*E28667		0.011877	$2.22
28675	Product Advertising Expense	D28675*E28667		0.000000	$0.00
28676	Business Fees (Other Operating Taxes)	D28676*Sum(E28667:E28675)		0.001483	$0.29
28677	***Total Marketing & Business Fees***	Sum(E28667:E28676)			$6.24
28678					
28679	***Sub-Total Direct Cost & Marketing***	E28667+E28677			$193.26
28680					
28681	***Other Direct Expenses***				
28682	Network Operations	D28682*E28679		0.034832	$6.73
28683	Network Support Assets	D28683*E28679		0.014703	$2.84
28684	General Support Assets	D28684*E28679		0.088742	$17.15
28685	General Purpose Computers	D28685*E28679		0.043342	$8.38
28686	Uncollectible	D28686*E28679		0.003786	$0.73
28687	Accounting & Finance Expense	D28687*E28679		0.007346	$1.42
28688	Human Resources Expense	D28688*E28679		0.008294	$1.60
28689	Information Management Expense	D28689*E28679		0.070887	$13.70
28690	Intangibles	D28690*E28679		0.000000	$0.00
28691	***Total Other Direct Expenses***	Sum(E28682:E28690)			$52.55
28692					
28693	***TELRIC***	E28682+E28691			$245.81
28694					
28695	***Common***				
28696	Executive Expense	D28696*E28693		0.011267	$2.77
28697	Planning Expense	D28697*E28693		0.000525	$0.13
28698	External Relations Expense	D28698*E28693		0.037846	$9.30
28699	Legal Expense	D28699*E28693		0.004717	$1.16
28700	Other Procurement Expense	D28700*E28693		0.001860	$0.46
28701	Research & Development Expense	D28701*E28693		0.000006	$0.00
28702	Other General and Admin Expense	D28702*E28693		0.015064	$3.70
28703	***Common Costs***	Sum(E28696:E28702)			$17.52
28704					
28705	***TELRIC + Common Costs***	E28693+E28703			$263.33

NONRECURRING COST DETAIL SUMMARY

Study Name: NONRECURRING ELEMENTS
Study Year: 2002
Analyst: Deffley/Eoriatti
Product Group: Interconnection

State: South Dakota

Work Item	Time Minutes	Prob #1	Prob #2	Prob #3	Prob #4	Applied Time (Minutes)	Labor /Hour	Cost
A	B	C	D	E	F	G B * (C Thru F)	H	I H * (G/60)
PRIVATE LINE TO EEL CONVERSION								
ADD								
-INTERCONNECT SERVICE CENTER								
Review LSR for completeness and accuracy, contractual entries	3	1.000				3.00	$39.16	$1.96
Exchange info, obtain CO, name, address, office type. Access Telephone Address Guide to obta	4	1.000				4.00	$39.16	$2.61
CPPD look-up billing USOC's for co-provider	2	1.000				2.00	$39.16	$1.31
Summary Bill List-Look up Billing Telephone Number, tax code, and bill date	2	1.000				2.00	$39.16	$1.31
Verify Qwest end user Customer Service Record if order issuance applicable to this product	2	1.000				2.00	$39.16	$1.31
Determine if the end user has Qwest retail contract	2	1.000				2.00	$39.16	$1.31
Determine critical dates	1	1.000				1.00	$39.16	$0.65
Populate required fields	3	1.000				3.00	$39.16	$1.96
Type, review and submit to customer the Firm Order Confirmation (FOC)	3	1.000				3.00	$39.16	$1.96
Input order into service order processor. Type and format order for billing and provisioning	10	1.000				10.00	$39.16	$6.53
Ensure order is successfully distributed to the systems and is ready for provisioning	3	1.000				3.00	$39.16	$1.96
Subtotal - INTERCONNECT SERVICE CENTER						**35.00**		**$22.84**
-SERVICE DESIGN CENTER - IMPLEMENTOR								
Access Work Authorization	2	1.000				2.00	$44.31	$1.48
Closeout activities	3	1.000				3.00	$44.31	$2.22
Subtotal - SERVICE DESIGN CENTER - IMPLEMENTOR						**5.00**		**$3.69**
Total For Service:						**40.00**		**$26.54**

NONRECURRING COST DETAIL SUMMARY

Study Name: NONRECURRING ELEMENTS
Study Year: 2002
Analyst: Deffley/Eoriatti
Product Group: Interconnection

State: South Dakota

	Work Item	Time Minutes	Prob #1	Prob #2	Prob #3	Prob #4	Applied Time (Minutes)	Labor /Hour	Cost
	A	B	C	D	E	F	G	H	I
							B * (C Thru F)		H * (G/60)

PRIVATE LINE TO EEL CONVERSION (con't)

28757	**Direct Cost**					$26.54
28758						
28759		Cost Calculation			Cost Factor	Cost
28760		B		C	D	E
28761						
28762	***Marketing & Business Fees***					
28763	Product Management Expense	D28763*E28757			0.019957	$0.53
28764	Sales Expense	D28764*E28757			0.011877	$0.32
28765	Product Advertising Expense	D28765*E28757			0.000000	$0.00
28766	Business Fees (Other Operating Taxes)	D28766*Sum(E28757:E28765)			0.001483	$0.04
28767	***Total Marketing & Business Fees***	Sum(E28757:E28766)				$0.89
28768						
28769	***Sub-Total Direct Cost & Marketing***	E28757+E28767				$27.42
28770						
28771	***Other Direct Expenses***					
28772	Network Operations	D28772*E28769			0.034832	$0.96
28773	Network Support Assets	D28773*E28769			0.014703	$0.40
28774	General Support Assets	D28774*E28769			0.088742	$2.43
28775	General Purpose Computers	D28775*E28769			0.043342	$1.19
28776	Uncollectible	D28776*E28769			0.003786	$0.10
28777	Accounting & Finance Expense	D28777*E28769			0.007346	$0.20
28778	Human Resources Expense	D28778*E28769			0.008294	$0.23
28779	Information Management Expense	D28779*E28769			0.070887	$1.94
28780	Intangibles	D28780*E28769			0.000000	$0.00
28781	***Total Other Direct Expenses***	Sum(E28772:E28780)				$7.46
28782						
28783	***TELRIC***	E28772+E28781				$34.88
28784						
28785	***Common***					
28786	Executive Expense	D28786*E28783			0.011267	$0.39
28787	Planning Expense	D28787*E28783			0.000525	$0.02
28788	External Relations Expense	D28788*E28783			0.037846	$1.32
28789	Legal Expense	D28789*E28783			0.004717	$0.16
28790	Other Procurement Expense	D28790*E28783			0.001860	$0.06
28791	Research & Development Expense	D28791*E28783			0.000006	$0.00
28792	Other General and Admin Expense	D28792*E28783			0.015064	$0.53
28793	***Common Costs***	Sum(E28786:E28792)				$2.49
28794						
28795	***TELRIC + Common Costs***	E28783+E28793				$37.36

NONRECURRING COST DETAIL SUMMARY

Study Name: NONRECURRING ELEMENTS
Study Year: 2002
Analyst: Deffley/Eoriatti
Product Group: Interconnection

State: South Dakota

Work Item	Time Minutes	Prob #1	Prob #2	Prob #3	Prob #4	Applied Time (Minutes)	Labor /Hour	Cost
A	B	C	D	E	F	G	H	I
						B * (C Thru F)		H * (G/60)
DS1 ENHANCED EXTENDED LOOP TRANSPORT MUX								
ADD								
-INTERCONNECT SERVICE CENTER								
.6 probability is percent of time this activity will occur.								
Review LSR for completeness and accuracy, contractual entries	3	1.000				3.00	$40.03	$2.00
Verify Connecting Facility Assignment (CFA) for facility/circuit availability	1	1.000				1.00	$40.03	$0.67
Exchange info, obtain CO, name, address, office type. Access Telephone Address Guide to obta	4	1.000				4.00	$40.03	$2.67
CPPD look-up billing USOC's for co-provider	2	1.000				2.00	$40.03	$1.33
Summary Bill List-Look up Billing Telephone Number, tax code, and bill date	2	1.000				2.00	$40.03	$1.33
Determine critical dates	1	1.000				1.00	$40.03	$0.67
Populate required fields	3	1.000				3.00	$40.03	$2.00
Type, review and submit to customer the Firm Order Confirmation (FOC)	3	1.000				3.00	$40.03	$2.00
Input order into service order processor. Type and format order for billing and provisioning	10	1.000				10.00	$40.03	$6.67
Ensure order is successfully distributed to the systems and is ready for provisioning	3	1.000				3.00	$40.03	$2.00
Handle calls from other departments working the order	5	0.600				3.00	$40.03	$2.00
Handle issues including conditioning, facility, cable&pair	5	0.600				3.00	$40.03	$2.00
Subtotal - INTERCONNECT SERVICE CENTER						**38.00**		**$25.35**
-DESIGN								
Probabilities are % manual work required. Reciprocal is mechanization rate.								
ORDER HANDLING/SCREENING	5	0.200				1.00	$44.31	$0.74
GOC ORDER LOG	6	0.200				1.20	$44.31	$0.89
ENTER WA MASK	5	0.800				4.00	$44.31	$2.95
PREP LOOP INPUT/DRI	15	0.750				11.25	$44.31	$8.31
CIRCUIT DESIGN	30	1.000				30.00	$44.31	$22.16
DISTRIBUTE WORD DOC	2	0.900				1.80	$44.31	$1.33
Subtotal - DESIGN						**49.25**		**$36.37**
-CENTRAL OFFICE FRAMES								
2 probability is work done in two co's.								
ANALYZE ORDER	5	1.000	2.000			10.00	$43.81	$7.30
DSX3 CROSS-CONNECT	4	1.000	2.000			8.00	$43.81	$5.84
PLACE LOOPBACK TEST PLUG	2	1.000				2.00	$43.81	$1.46
COMPLETE CONFORMANCE TEST	15	1.000				15.00	$43.81	$10.95
POST COMPLETE IN WFA-DI	2	1.000	2.000			4.00	$43.81	$2.92
COMPLETE WITH CCT-I	3	1.000	2.000			6.00	$43.81	$4.38
Subtotal - CENTRAL OFFICE FRAMES						**45.00**		**$32.86**
-SERVICE DELIVERY IMPLEMENTOR								

NONRECURRING COST DETAIL SUMMARY

Study Name: NONRECURRING ELEMENTS
Study Year: 2002
Analyst: Deffley/Eoriatti
Product Group: Interconnection

State: South Dakota

Work Item	Time Minutes	Prob #1	Prob #2	Prob #3	Prob #4	Applied Time (Minutes)	Labor /Hour	Cost
A	B	C	D	E	F	G B * (C Thru F)	H	I H * (G/60)
DS1 ENHANCED EXTENDED LOOP TRANSPORT MUX (con't)								
SCREEN WFA FOR CIRCUIT	15	1.000				15.00	$43.81	$10.95
VERIFY LNO COMPLETION	10	1.000				10.00	$43.81	$7.30
TEST CIRCUIT	35	1.000				35.00	$43.81	$25.56
NOTIFY CUSTOMER	5	1.000				5.00	$43.81	$3.65
COMPLETE CIRCUIT IN WFA/C	10	1.000				10.00	$43.81	$7.30
Subtotal - SERVICE DELIVERY IMPLEMENTOR						**75.00**		**$54.76**
DISCONNECT								
-INTERCONNECT SERVICE CENTER								
Review LSR for completeness and accuracy, contractual entries	3	1.000				3.00	$40.03	$2.00
Verify existing account (access CSR in BOSS/CARS) and obtain closing bill address.	2	1.000				2.00	$40.03	$1.33
Type, review and submit to customer the Firm Order Confirmation (FOC)	2	1.000				2.00	$40.03	$1.33
Input order into service order processor. Type and format order for billing and provisioning	10	1.000				10.00	$40.03	$6.67
Populate required fields	3	1.000				3.00	$40.03	$2.00
Ensure order is successfully distributed to the systems and is ready for provisioning	3	1.000				3.00	$40.03	$2.00
Subtotal - INTERCONNECT SERVICE CENTER						**23.00**		**$15.34**
-DESIGN								
Probabilities are % manual work required. Reciprocal is mechanization rate.								
ORDER HANDLING/SCREEN	5	0.100				0.50	$44.31	$0.37
GOC ORDER LOG	6	0.100				0.60	$44.31	$0.44
ENTER WA MASK	5	0.100				0.50	$44.31	$0.37
DISCONNECT CIRCUIT	5	0.100				0.50	$44.31	$0.37
DISTRIBUTE WORD DOC	2	0.100				0.20	$44.31	$0.15
Subtotal - DESIGN						**2.30**		**$1.70**
-CENTRAL OFFICE FRAMES								
2 probability is work done in two co's.								
ANALYZE ORDER	5	1.000	2.000			10.00	$43.81	$7.30
JUMPER ACTIVITY	2.3	1.000	2.000			4.60	$43.81	$3.36
COMPLETE ORDER IN WFA-DI	2	1.000	2.000			4.00	$43.81	$2.92
Subtotal - CENTRAL OFFICE FRAMES						**18.60**		**$13.58**
-SERVICE DELIVERY IMPLEMENTOR								
SCREEN WFA FOR CIRCUIT	5	1.000				5.00	$43.81	$3.65
CONTACT CUSTOMER	5	1.000				5.00	$43.81	$3.65
COMPLETE CIRCUIT IN WFA/C	5	1.000				5.00	$43.81	$3.65

NONRECURRING COST DETAIL SUMMARY

Study Name: NONRECURRING ELEMENTS
Study Year: 2002
Analyst: Deffley/Eoriatti
Product Group: Interconnection

State: South Dakota

Work Item	Time Minutes	Prob #1	Prob #2	Prob #3	Prob #4	Applied Time (Minutes)	Labor /Hour	Cost
A	B	C	D	E	F	G B * (C Thru F)	H	I H * (G/60)
DS1 ENHANCED EXTENDED LOOP TRANSPORT MUX (con't)								
Subtotal - SERVICE DELIVERY IMPLEMENTOR						**15.00**		**$10.95**
Total For Service:						**266.15**		**$190.92**

	Work Item	Time Minutes	Prob #1	Prob #2	Prob #3	Prob #4	Applied Time (Minutes)	Labor /Hour	Cost
	A	B	C	D	E	F	G	H	I
							B * (C Thru F)		H * (G/60)

DS1 ENHANCED EXTENDED LOOP TRANSPORT MUX (con't)

28937	**Direct Cost**				$190.92
28938					
28939		Cost Calculation		Cost Factor	Cost
28940		B	C	D	E
28941					
28942	***Marketing & Business Fees***				
28943	Product Management Expense	D28943*E28937		0.019957	$3.81
28944	Sales Expense	D28944*E28937		0.011877	$2.27
28945	Product Advertising Expense	D28945*E28937		0.000000	$0.00
28946	Business Fees (Other Operating Taxes)	D28946*Sum(E28937:E28945)		0.001483	$0.29
28947	***Total Marketing & Business Fees***	Sum(E28937:E28946)			$6.37
28948					
28949	***Sub-Total Direct Cost & Marketing***	E28937+E28947			$197.29
28950					
28951	***Other Direct Expenses***				
28952	Network Operations	D28952*E28949		0.034832	$6.87
28953	Network Support Assets	D28953*E28949		0.014703	$2.90
28954	General Support Assets	D28954*E28949		0.088742	$17.51
28955	General Purpose Computers	D28955*E28949		0.043342	$8.55
28956	Uncollectible	D28956*E28949		0.003786	$0.75
28957	Accounting & Finance Expense	D28957*E28949		0.007346	$1.45
28958	Human Resources Expense	D28958*E28949		0.008294	$1.64
28959	Information Management Expense	D28959*E28949		0.070887	$13.99
28960	Intangibles	D28960*E28949		0.000000	$0.00
28961	***Total Other Direct Expenses***	Sum(E28952:E28960)			$53.65
28962					
28963	***TELRIC***	E28952+E28961			$250.94
28964					
28965	***Common***				
28966	Executive Expense	D28966*E28963		0.011267	$2.83
28967	Planning Expense	D28967*E28963		0.000525	$0.13
28968	External Relations Expense	D28968*E28963		0.037846	$9.50
28969	Legal Expense	D28969*E28963		0.004717	$1.18
28970	Other Procurement Expense	D28970*E28963		0.001860	$0.47
28971	Research & Development Expense	D28971*E28963		0.000006	$0.00
28972	Other General and Admin Expense	D28972*E28963		0.015064	$3.78
28973	***Common Costs***	Sum(E28966:E28972)			$17.89
28974					
28975	***TELRIC + Common Costs***	E28963+E28973			$268.83

NONRECURRING COST DETAIL SUMMARY

Study Name: NONRECURRING ELEMENTS
Study Year: 2002
Analyst: Deffley/Eoriatti
Product Group: Interconnection

State: South Dakota

Work Item	Time Minutes	Prob #1	Prob #2	Prob #3	Prob #4	Applied Time (Minutes)	Labor /Hour	Cost
A	B	C	D	E	F	G	H	I
						B * (C Thru F)		H * (G/60)
DS3 ENHANCED EXTENDED LOOP TRANSPORT MUX								
ADD								
-INTERCONNECT SERVICE CENTER								
.6 probability is percent of time this activity will occur.								
Review LSR for completeness and accuracy, contractual entries	3	1.000				3.00	$40.03	$2.00
Verify Connecting Facility Assignment (CFA) for facility/circuit availability	1	1.000				1.00	$40.03	$0.67
Exchange info, obtain CO, name, address, office type. Access Telephone Address Guide to obta	4	1.000				4.00	$40.03	$2.67
CPPD look-up billing USOC's for co-provider	2	1.000				2.00	$40.03	$1.33
Summary Bill List-Look up Billing Telephone Number, tax code, and bill date	2	1.000				2.00	$40.03	$1.33
Determine critical dates	1	1.000				1.00	$40.03	$0.67
Populate required fields	3	1.000				3.00	$40.03	$2.00
Type, review and submit to customer the Firm Order Confirmation (FOC)	3	1.000				3.00	$40.03	$2.00
Input order into service order processor. Type and format order for billing and provisioning	10	1.000				10.00	$40.03	$6.67
Ensure order is successfully distributed to the systems and is ready for provisioning	3	1.000				3.00	$40.03	$2.00
Handle calls from other departments working the order	5	0.600				3.00	$40.03	$2.00
Handle issues including conditioning, facility, cable&pair	5	0.600				3.00	$40.03	$2.00
Subtotal - INTERCONNECT SERVICE CENTER						**38.00**		**$25.35**
-DESIGN								
Probabilities are % manual work required. Reciprocal is mechanization rate.								
ORDER HANDLING/SCREENING	5	0.200				1.00	$44.31	$0.74
GOC ORDER LOG	6	0.200				1.20	$44.31	$0.89
ENTER WA MASK	5	0.800				4.00	$44.31	$2.95
PREP LOOP INPUT/DRI	15	0.750				11.25	$44.31	$8.31
CIRCUIT DESIGN	30	1.000				30.00	$44.31	$22.16
DISTRIBUTE WORD DOC	2	0.900				1.80	$44.31	$1.33
Subtotal - DESIGN						**49.25**		**$36.37**
-CENTRAL OFFICE FRAMES								
2 probability is work done in two co's.								
ANALYZE ORDER	5	1.000	2.000			10.00	$43.81	$7.30
DSX3 CROSS-CONNECT	4	1.000	2.000			8.00	$43.81	$5.84
PLACE LOOPBACK TEST PLUG	2	1.000				2.00	$43.81	$1.46
COMPLETE CONFORMANCE TEST	15	1.000				15.00	$43.81	$10.95
POST COMPLETE IN WFA-DI	2	1.000	2.000			4.00	$43.81	$2.92
COMPLETE WITH CCT-I	3	1.000	2.000			6.00	$43.81	$4.38
Subtotal - CENTRAL OFFICE FRAMES						**45.00**		**$32.86**
-SERVICE DELIVERY IMPLEMENTOR								

NONRECURRING COST DETAIL SUMMARY

Study Name: NONRECURRING ELEMENTS
Study Year: 2002
Analyst: Deffley/Eoriatti
Product Group: Interconnection

State: South Dakota

Work Item	Time Minutes	Prob #1	Prob #2	Prob #3	Prob #4	Applied Time (Minutes)	Labor /Hour	Cost
A	B	C	D	E	F	G	H	I
						B * (C Thru F)		H * (G/60)
DS3 ENHANCED EXTENDED LOOP TRANSPORT MUX (con't)								
SCREEN WFA FOR CIRCUIT	15	1.000				15.00	$43.81	$10.95
VERIFY LNO COMPLETION	10	1.000				10.00	$43.81	$7.30
TEST CIRCUIT	35	1.000				35.00	$43.81	$25.56
NOTIFY CUSTOMER	5	1.000				5.00	$43.81	$3.65
COMPLETE CIRCUIT IN WFA/C	10	1.000				10.00	$43.81	$7.30
Subtotal - SERVICE DELIVERY IMPLEMENTOR						**75.00**		**$54.76**
DISCONNECT								
-INTERCONNECT SERVICE CENTER								
Review LSR for completeness and accuracy, contractual entries	3	1.000				3.00	$40.03	$2.00
Verify existing account (access CSR in BOSS/CARS) and obtain closing bill address.	2	1.000				2.00	$40.03	$1.33
Type, review and submit to customer the Firm Order Confirmation (FOC)	2	1.000				2.00	$40.03	$1.33
Input order into service order processor. Type and format order for billing and provisioning	10	1.000				10.00	$40.03	$6.67
Populate required fields	3	1.000				3.00	$40.03	$2.00
Ensure order is successfully distributed to the systems and is ready for provisioning	3	1.000				3.00	$40.03	$2.00
Subtotal - INTERCONNECT SERVICE CENTER						**23.00**		**$15.34**
-DESIGN								
Probabilities are % manual work required. Reciprocal is mechanization rate.								
ORDER HANDLING/SCREEN	5	0.100				0.50	$44.31	$0.37
GOC ORDER LOG	6	0.100				0.60	$44.31	$0.44
ENTER WA MASK	5	0.100				0.50	$44.31	$0.37
DISCONNECT CIRCUIT	5	0.100				0.50	$44.31	$0.37
DISTRIBUTE WORD DOC	2	0.100				0.20	$44.31	$0.15
Subtotal - DESIGN						**2.30**		**$1.70**
-CENTRAL OFFICE FRAMES								
2 probability is work done in two co's.								
ANALYZE ORDER	5	1.000	2.000			10.00	$43.81	$7.30
JUMPER ACTIVITY	2.3	1.000	2.000			4.60	$43.81	$3.36
COMPLETE ORDER IN WFA-DI	2	1.000	2.000			4.00	$43.81	$2.92
Subtotal - CENTRAL OFFICE FRAMES						**18.60**		**$13.58**
-SERVICE DELIVERY IMPLEMENTOR								
SCREEN WFA FOR CIRCUIT	5	1.000				5.00	$43.81	$3.65
CONTACT CUSTOMER	5	1.000				5.00	$43.81	$3.65
COMPLETE CIRCUIT IN WFA/C	5	1.000				5.00	$43.81	$3.65

NONRECURRING COST DETAIL SUMMARY

Study Name: NONRECURRING ELEMENTS
Study Year: 2002
Analyst: Deffley/Eoriatti
Product Group: Interconnection

ENRC Version: 2.16
Date: 06/03/02

State: South Dakota

Work Item	Time Minutes	Prob #1	Prob #2	Prob #3	Prob #4	Applied Time (Minutes)	Labor /Hour	Cost
A	B	C	D	E	F	G	H	I
						B * (C Thru F)		H * (G/60)
DS3 ENHANCED EXTENDED LOOP TRANSPORT MUX (con't)								
Subtotal - SERVICE DELIVERY IMPLEMENTOR						**15.00**		**$10.95**
Total For Service:						**266.15**		**$190.92**

NONRECURRING COST DETAIL SUMMARY

Study Name: NONRECURRING ELEMENTS
Study Year: 2002
Analyst: Deffley/Eoriatti
Product Group: Interconnection

State: South Dakota

	Work Item	Time Minutes	Prob #1	Prob #2	Prob #3	Prob #4	Applied Time (Minutes)	Labor /Hour	Cost
	A	B	C	D	E	F	G	H	I
							B * (C Thru F)		H * (G/60)

DS3 ENHANCED EXTENDED LOOP TRANSPORT MUX (con't)

		Cost Calculation		Cost Factor	Cost
		B	C	D	E
29117	**Direct Cost**				$190.92
29118					
29119					
29120					
29121					
29122	***Marketing & Business Fees***				
29123	Product Management Expense	D29123*E29117		0.019957	$3.81
29124	Sales Expense	D29124*E29117		0.011877	$2.27
29125	Product Advertising Expense	D29125*E29117		0.000000	$0.00
29126	Business Fees (Other Operating Taxes)	D29126*Sum(E29117:E29125]		0.001483	$0.29
29127	***Total Marketing & Business Fees***	Sum(E29117:E29126)			$6.37
29128					
29129	***Sub-Total Direct Cost & Marketing***	E29117+E29127			$197.29
29130					
29131	***Other Direct Expenses***				
29132	Network Operations	D29132*E29129		0.034832	$6.87
29133	Network Support Assets	D29133*E29129		0.014703	$2.90
29134	General Support Assets	D29134*E29129		0.088742	$17.51
29135	General Purpose Computers	D29135*E29129		0.043342	$8.55
29136	Uncollectible	D29136*E29129		0.003786	$0.75
29137	Accounting & Finance Expense	D29137*E29129		0.007346	$1.45
29138	Human Resources Expense	D29138*E29129		0.008294	$1.64
29139	Information Management Expense	D29139*E29129		0.070887	$13.99
29140	Intangibles	D29140*E29129		0.000000	$0.00
29141	***Total Other Direct Expenses***	Sum(E29132:E29140)			$53.65
29142					
29143	***TELRIC***	E29132+E29141			$250.94
29144					
29145	***Common***				
29146	Executive Expense	D29146*E29143		0.011267	$2.83
29147	Planning Expense	D29147*E29143		0.000525	$0.13
29148	External Relations Expense	D29148*E29143		0.037846	$9.50
29149	Legal Expense	D29149*E29143		0.004717	$1.18
29150	Other Procurement Expense	D29150*E29143		0.001860	$0.47
29151	Research & Development Expense	D29151*E29143		0.000006	$0.00
29152	Other General and Admin Expense	D29152*E29143		0.015064	$3.78
29153	***Common Costs***	Sum(E29146:E29152)			$17.89
29154					
29155	***TELRIC + Common Costs***	E29143+E29153			$268.83

NONRECURRING COST DETAIL SUMMARY

Study Name: NONRECURRING ELEMENTS
Study Year: 2002
Analyst: Deffley/Eoriatti
Product Group: Interconnection

State: South Dakota

Work Item	Time Minutes	Prob #1	Prob #2	Prob #3	Prob #4	Applied Time (Minutes)	Labor /Hour	Cost
A	B	C	D	E	F	G	H	I
						B * (C Thru F)		H * (G/60)
UPS CUSTOMER CHANNEL AND SHARED DISTRIBUTION LOOP								
ADD								
-INTERCONNECT SERVICE CENTER (ICS)								
.15 probability is % manual work required. 85% IMA Flow-through								
Verify all required fields are filled in and populated correctly for Local Service Request (LSR)	3	0.150				0.45	$39.16	$0.29
Call CLEC, Inform LSR is in process of being worked	2	0.150				0.30	$39.16	$0.20
Exchange Information - Obtain CO name, address, office type	2	0.150				0.30	$39.16	$0.20
Look up billing USOC's for co-provider	5	0.150				0.75	$39.16	$0.49
Resale Summary List - Look up billing telephone number, tax code, and BAPC	2	0.150				0.30	$39.16	$0.20
Using Swift/SOP, Issue orders	10	0.150				1.50	$39.16	$0.98
IMA-FOC (Firm Order Confirmation) to CLEC	2	0.150				0.30	$39.16	$0.20
CRM-Populate required fields	3	0.150				0.45	$39.16	$0.29
SOAC ensure at least 2 successes	6	0.150				0.90	$39.16	$0.59
SOP-Ensure PD or RL, File in drawer	2	0.150				0.30	$39.16	$0.20
ESOI's-Generated from Loop Provisioning Center	5	0.150				0.75	$39.16	$0.49
Call Handling, Follow up calls from Implementors, LPC, etc.	5	0.150				0.75	$39.16	$0.49
Subtotal - INTERCONNECT SERVICE CENTER (ICS)						**7.05**		**$4.60**
-LRAC								
Probabilities are % manual work required. Reciprocal is mechanization rate.								
Screen order	2	0.200				0.40	$37.78	$0.25
Load work request tech load system	2	0.200				0.40	$37.78	$0.25
Close out order with tech	3	0.050				0.15	$37.78	$0.09
Subtotal - LRAC						**0.95**		**$0.60**
-INSTALLATION/FIELD TECHNICIAN								
Travel time	21	1.000				21.00	$42.68	$14.94
Service Area Interface/field connection point work activity.	15	1.000				15.00	$42.68	$10.67
Testing and turn up.	5	1.000				5.00	$42.68	$3.56
Close order in field access system/ WFADO	3	1.000				3.00	$42.68	$2.13
Subtotal - INSTALLATION/FIELD TECHNICIAN						**44.00**		**$31.30**
-ENTERPRISE - NOC (NETWORK OPERATIONS CENTER)								
Prob #1 = 10% of orders require translations								
Translations	25	0.100				2.50	$41.45	$1.73
RADSL Service act and testing	10	0.100				1.00	$41.45	$0.69
Subtotal - ENTERPRISE - NOC (NETWORK OPERATIONS CENTER)						**3.50**		**$2.42**

NONRECURRING COST DETAIL SUMMARY

Study Name: NONRECURRING ELEMENTS
Study Year: 2002
Analyst: Deffley/Eoriatti
Product Group: Interconnection

State: South Dakota

Work Item	Time Minutes	Prob #1	Prob #2	Prob #3	Prob #4	Applied Time (Minutes)	Labor /Hour	Cost
A	B	C	D	E	F	G	H	I
						B * (C Thru F)		H * (G/60)
UPS CUSTOMER CHANNEL AND SHARED DISTRIBUTION LOOP (con't,								
DISCONNECT								
-INTERCONNECT SERVICE CENTER (ICS)								
.15 probability is % manual work required. 85% IMA Flow-through								
Verify all required fields are filled in and populated correctly for Local Service Request (LSR)	3	0.150				0.45	$39.16	$0.29
Call CLEC, Inform LSR is in process of being worked	2	0.150				0.30	$39.16	$0.20
Using Swift/SOP, Issue orders	10	0.150				1.50	$39.16	$0.98
IMA-FOC (Firm Order Confirmation) to CLEC	2	0.150				0.30	$39.16	$0.20
CRM-Populate required fields	3	0.150				0.45	$39.16	$0.29
SOAC ensure at least 2 successes	6	0.150				0.90	$39.16	$0.59
SOP-Ensure PD or RL, File in drawer	2	0.150				0.30	$39.16	$0.20
Subtotal - INTERCONNECT SERVICE CENTER (ICS)						**4.20**		**$2.74**
-ENTERPRISE - NOC (NETWORK OPERATIONS CENTER)								
Prob #1 = 10% of orders require translations								
Translations	25	0.100				2.50	$41.45	$1.73
Subtotal - ENTERPRISE - NOC (NETWORK OPERATIONS CENTER,						**2.50**		**$1.73**
Total For Service:						**62.20**		**$43.38**

NONRECURRING COST DETAIL SUMMARY

Study Name: NONRECURRING ELEMENTS
Study Year: 2002
Analyst: Deffley/Eoriatti
Product Group: Interconnection

State: South Dakota

	Work Item	Time Minutes	Prob #1	Prob #2	Prob #3	Prob #4	Applied Time (Minutes)	Labor /Hour	Cost
	A	B	C	D	E	F	G	H	I
							B * (C Thru F)		H * (G/60)

UPS CUSTOMER CHANNEL AND SHARED DISTRIBUTION LOOP (con't,

		Cost Calculation		Cost Factor	Cost
		B	C	D	E
29252	**Direct Cost**				$43.38
29253					
29254					
29255					
29256					
29257	***Marketing & Business Fees***				
29258	Product Management Expense	D29258*E29252		0.019957	$0.87
29259	Sales Expense	D29259*E29252		0.011877	$0.52
29260	Product Advertising Expense	D29260*E29252		0.000000	$0.00
29261	Business Fees (Other Operating Taxes)	D29261*Sum(E29252:E29260)		0.001483	$0.07
29262	***Total Marketing & Business Fees***	Sum(E29252:E29261)			$1.45
29263					
29264	***Sub-Total Direct Cost & Marketing***	E29252+E29262			$44.83
29265					
29266	***Other Direct Expenses***				
29267	Network Operations	D29267*E29264		0.034832	$1.56
29268	Network Support Assets	D29268*E29264		0.014703	$0.66
29269	General Support Assets	D29269*E29264		0.088742	$3.98
29270	General Purpose Computers	D29270*E29264		0.043342	$1.94
29271	Uncollectible	D29271*E29264		0.003786	$0.17
29272	Accounting & Finance Expense	D29272*E29264		0.007346	$0.33
29273	Human Resources Expense	D29273*E29264		0.008294	$0.37
29274	Information Management Expense	D29274*E29264		0.070887	$3.18
29275	Intangibles	D29275*E29264		0.000000	$0.00
29276	***Total Other Direct Expenses***	Sum(E29267:E29275)			$12.19
29277					
29278	***TELRIC***	E29267+E29276			$57.02
29279					
29280	***Common***				
29281	Executive Expense	D29281*E29278		0.011267	$0.64
29282	Planning Expense	D29282*E29278		0.000525	$0.03
29283	External Relations Expense	D29283*E29278		0.037846	$2.16
29284	Legal Expense	D29284*E29278		0.004717	$0.27
29285	Other Procurement Expense	D29285*E29278		0.001860	$0.11
29286	Research & Development Expense	D29286*E29278		0.000006	$0.00
29287	Other General and Admin Expense	D29287*E29278		0.015064	$0.86
29288	***Common Costs***	Sum(E29281:E29287)			$4.06
29289					
29290	***TELRIC + Common Costs***	E29278+E29288			$61.09

NONRECURRING COST DETAIL SUMMARY

Study Name: NONRECURRING ELEMENTS
Study Year: 2002
Analyst: Deffley/Eoriatti
Product Group: Interconnection

State: South Dakota

Work Item	Time Minutes	Prob #1	Prob #2	Prob #3	Prob #4	Applied Time (Minutes)	Labor /Hour	Cost
A	B	C	D	E	F	G	H	I
						B * (C Thru F)		H * (G/60)
UPS CUSTOMER CHANNEL AND UNBUNDLED DISTRIBUTION SUBLOOP								
ADD								
-INTERCONNECT SERVICE CENTER (ICS)								
Verify all required fields are filled in and populated correctly for Local Service Request (LSR)	3	1.000				3.00	$39.16	$1.96
Call CLEC, Inform LSR is in process of being worked	2	1.000				2.00	$39.16	$1.31
Exchange Information - Obtain CO name, address, office type	2	1.000				2.00	$39.16	$1.31
Look up billing USOC's for co-provider	5	1.000				5.00	$39.16	$3.26
Resale Summary List - Look up billing telephone number, tax code, and BAPC	2	1.000				2.00	$39.16	$1.31
Using Swift/SOP, Issue orders	10	1.000				10.00	$39.16	$6.53
IMA-FOC (Firm Order Confirmation) to CLEC	2	1.000				2.00	$39.16	$1.31
CRM-Populate required fields	3	1.000				3.00	$39.16	$1.96
SOAC ensure at least 2 successes	6	1.000				6.00	$39.16	$3.92
SOP-Ensure PD or RL, File in drawer	2	1.000				2.00	$39.16	$1.31
ESOI's-Generated from Loop Provisioning Center	5	1.000				5.00	$39.16	$3.26
Call Handling, Follow up calls from Implementors, LPC, etc.	5	1.000				5.00	$39.16	$3.26
Subtotal - INTERCONNECT SERVICE CENTER (ICS)						**47.00**		**$30.68**
-LRAC								
Probabilities are % manual work required. Reciprocal is mechanization rate.								
Screen order	2	0.200				0.40	$37.78	$0.25
Load work request/tech load system	2	0.200				0.40	$37.78	$0.25
Close out order with tech	3	0.050				0.15	$37.78	$0.09
Subtotal - LRAC						**0.95**		**$0.60**
-INSTALLATION/FIELD TECHNICIAN								
Travel time	21	1.000				21.00	$42.68	$14.94
Service Area Interface/field connection point work activity.	13	1.000				13.00	$42.68	$9.25
0.3 PROBABILITY IS PERCENT OF TIME NEW SERVICE WILL BE ORDERED REQUIRING WORK AT PREMISES								
Perform premises work activities	35	0.300				10.50	$42.68	$7.47
Testing and turn up.	20	0.300				6.00	$42.68	$4.27
Close order in field access system/ WFADO	3	1.000				3.00	$42.68	$2.13
Subtotal - INSTALLATION/FIELD TECHNICIAN						**53.50**		**$38.06**
-ENTERPRISE - NOC (NETWORK OPERATIONS CENTER)								
Prob #1 = 10% of orders require translations								
Translations	25	0.100				2.50	$41.45	$1.73
RADSL Service act and testing	10	0.100				1.00	$41.45	$0.69
Subtotal - ENTERPRISE - NOC (NETWORK OPERATIONS CENTER)						**3.50**		**$2.42**

NONRECURRING COST DETAIL SUMMARY

Study Name: NONRECURRING ELEMENTS
Study Year: 2002
Analyst: Deffley/Eoriatti
Product Group: Interconnection

State: South Dakota

Work Item	Time Minutes	Prob #1	Prob #2	Prob #3	Prob #4	Applied Time (Minutes)	Labor /Hour	Cost
A	B	C	D	E	F	G B * (C Thru F)	H	I H * (G/60)
UPS CUSTOMER CHANNEL AND UNBUNDLED DISTRIBUTION SUBLOOP (con't,								
DISCONNECT								
-INTERCONNECT SERVICE CENTER (ICS)								
Verify all required fields are filled in and populated correctly for Local Service Request (LSR)	3	1.000				3.00	$39.16	$1.96
Call CLEC, Inform LSR is in process of being worked	2	1.000				2.00	$39.16	$1.31
Using Swift/SOP, Issue orders	10	1.000				10.00	$39.16	$6.53
IMA-FOC (Firm Order Confirmation) to CLEC	2	1.000				2.00	$39.16	$1.31
CRM-Populate required fields	3	1.000				3.00	$39.16	$1.96
SOAC ensure at least 2 successes	6	1.000				6.00	$39.16	$3.92
SOP-Ensure PD or RL, File in drawer	2	1.000				2.00	$39.16	$1.31
Subtotal - INTERCONNECT SERVICE CENTER (ICS)						**28.00**		**$18.27**
-ENTERPRISE - NOC (NETWORK OPERATIONS CENTER)								
Prob #1 = 10% of orders require translations								
Translations	25	0.100				2.50	$41.45	$1.73
Subtotal - ENTERPRISE - NOC (NETWORK OPERATIONS CENTER,						**2.50**		**$1.73**
Total For Service:						**135.45**		**$91.75**

NONRECURRING COST DETAIL SUMMARY

Study Name: NONRECURRING ELEMENTS
Study Year: 2002
Analyst: Deffley/Eoriatti
Product Group: Interconnection

State: South Dakota

	Work Item	Time Minutes	Prob #1	Prob #2	Prob #3	Prob #4	Applied Time (Minutes)	Labor /Hour	Cost
	A	B	C	D	E	F	G	H	I
							B * (C Thru F)		H * (G/60)

UPS CUSTOMER CHANNEL AND UNBUNDLED DISTRIBUTION SUBLOOP (con't,

		Cost Calculation		Cost Factor	Cost
		B	C	D	E
29387	**Direct Cost**				$91.75
29388					
29389					
29390					
29391					
29392	***Marketing & Business Fees***				
29393	Product Management Expense	D29393*E29387		0.019957	$1.83
29394	Sales Expense	D29394*E29387		0.011877	$1.09
29395	Product Advertising Expense	D29395*E29387		0.000000	$0.00
29396	Business Fees (Other Operating Taxes)	D29396*Sum(E29387:E29395)		0.001483	$0.14
29397	***Total Marketing & Business Fees***	Sum(E29387:E29396)			$3.06
29398					
29399	***Sub-Total Direct Cost & Marketing***	E29387+E29397			$94.81
29400					
29401	***Other Direct Expenses***				
29402	Network Operations	D29402*E29399		0.034832	$3.30
29403	Network Support Assets	D29403*E29399		0.014703	$1.39
29404	General Support Assets	D29404*E29399		0.088742	$8.41
29405	General Purpose Computers	D29405*E29399		0.043342	$4.11
29406	Uncollectible	D29406*E29399		0.003786	$0.36
29407	Accounting & Finance Expense	D29407*E29399		0.007346	$0.70
29408	Human Resources Expense	D29408*E29399		0.008294	$0.79
29409	Information Management Expense	D29409*E29399		0.070887	$6.72
29410	Intangibles	D29410*E29399		0.000000	$0.00
29411	***Total Other Direct Expenses***	Sum(E29402:E29410)			$25.78
29412					
29413	***TELRIC***	E29402+E29411			$120.59
29414					
29415	***Common***				
29416	Executive Expense	D29416*E29413		0.011267	$1.36
29417	Planning Expense	D29417*E29413		0.000525	$0.06
29418	External Relations Expense	D29418*E29413		0.037846	$4.56
29419	Legal Expense	D29419*E29413		0.004717	$0.57
29420	Other Procurement Expense	D29420*E29413		0.001860	$0.22
29421	Research & Development Expense	D29421*E29413		0.000006	$0.00
29422	Other General and Admin Expense	D29422*E29413		0.015064	$1.82
29423	***Common Costs***	Sum(E29416:E29422)			$8.60
29424					
29425	***TELRIC + Common Costs***	E29413+E29423			$129.19

NONRECURRING COST DETAIL SUMMARY

Study Name: NONRECURRING ELEMENTS
Study Year: 2002
Analyst: Deffley/Eoriatti
Product Group: Interconnection

State: South Dakota

ENRC Version: 2.16
Date: 06/03/02

Work Item	Time Minutes	Prob #1	Prob #2	Prob #3	Prob #4	Applied Time (Minutes)	Labor /Hour	Cost
A	B	C	D	E	F	G B * (C Thru F)	H	I H * (G/60)
UPS CUSTOMER CHANNEL AND CLEC PROVIDED LOOP								
ADD								
-INTERCONNECT SERVICE CENTER (ICS)								
.15 probability is % manual work required. 85% IMA Flow-through								
Verify all required fields are filled in and populated correctly for Local Service Request (LSR)	3	0.150				0.45	$39.16	$0.29
Call CLEC, Inform LSR is in process of being worked	2	0.150				0.30	$39.16	$0.20
Exchange Information - Obtain CO name, address, office type	2	0.150				0.30	$39.16	$0.20
Look up billing USOC's for co-provider	5	0.150				0.75	$39.16	$0.49
Resale Summary List - Look up billing telephone number, tax code, and BAPC	2	0.150				0.30	$39.16	$0.20
Using Swift/SOP, Issue orders	10	0.150				1.50	$39.16	$0.98
IMA-FOC (Firm Order Confirmation) to CLEC	2	0.150				0.30	$39.16	$0.20
CRM-Populate required fields	3	0.150				0.45	$39.16	$0.29
SOAC ensure at least 2 successes	6	0.150				0.90	$39.16	$0.59
SOP-Ensure PD or RL, File in drawer	2	0.150				0.30	$39.16	$0.20
ESOI's-Generated from Loop Provisioning Center	5	0.150				0.75	$39.16	$0.49
Call Handling, Follow up calls from Implementors, LPC, etc.	5	0.150				0.75	$39.16	$0.49
Subtotal - INTERCONNECT SERVICE CENTER (ICS)						**7.05**		**$4.60**
-LRAC								
Probabilities are % manual work required. Reciprocal is mechanization rate.								
Screen order	2	0.200				0.40	$37.78	$0.25
Load work request tech load system	2	0.200				0.40	$37.78	$0.25
Close out order with tech	3	0.050				0.15	$37.78	$0.09
Subtotal - LRAC						**0.95**		**$0.60**
-INSTALLATION/FIELD TECHNICIAN								
Travel time	21	1.000				21.00	$42.68	$14.94
Service Area Interface/field connection point work activity.	15	1.000				15.00	$42.68	$10.67
Testing and turn up.	5	1.000				5.00	$42.68	$3.56
Close order in field access system/ WFADO	3	1.000				3.00	$42.68	$2.13
Subtotal - INSTALLATION/FIELD TECHNICIAN						**44.00**		**$31.30**
-ENTERPRISE - NOC (NETWORK OPERATIONS CENTER)								
Prob #1 = 10% of orders require translations								
Translations	25	0.100				2.50	$41.45	$1.73
RADSL Service act and testing	10	0.100				1.00	$41.45	$0.69
Subtotal - ENTERPRISE - NOC (NETWORK OPERATIONS CENTER)						**3.50**		**$2.42**

NONRECURRING COST DETAIL SUMMARY

Study Name: NONRECURRING ELEMENTS
Study Year: 2002
Analyst: Deffley/Eoriatti
Product Group: Interconnection

ENRC Version: 2.16
Date: 06/03/02

State: South Dakota

Work Item	Time Minutes	Prob #1	Prob #2	Prob #3	Prob #4	Applied Time (Minutes)	Labor /Hour	Cost
A	B	C	D	E	F	G	H	I
						B * (C Thru F)		H * (G/60)
UPS CUSTOMER CHANNEL AND CLEC PROVIDED LOOP (con't)								
DISCONNECT								
-INTERCONNECT SERVICE CENTER (ICS)								
.15 probability is % manual work required. 85% IMA Flow-through								
Verify all required fields are filled in and populated correctly for Local Service Request (LSR)	3	0.150				0.45	$39.16	$0.29
Call CLEC, Inform LSR is in process of being worked	2	0.150				0.30	$39.16	$0.20
Using Swift/SOP, Issue orders	10	0.150				1.50	$39.16	$0.98
IMA-FOC (Firm Order Confirmation) to CLEC	2	0.150				0.30	$39.16	$0.20
CRM-Populate required fields	3	0.150				0.45	$39.16	$0.29
SOAC ensure at least 2 successes	6	0.150				0.90	$39.16	$0.59
SOP-Ensure PD or RL, File in drawer	2	0.150				0.30	$39.16	$0.20
Subtotal - INTERCONNECT SERVICE CENTER (ICS)						**4.20**		**$2.74**
-ENTERPRISE - NOC (NETWORK OPERATIONS CENTER)								
Prob #1 = 10% of orders require translations								
Translations	25	0.100				2.50	$41.45	$1.73
Subtotal - ENTERPRISE - NOC (NETWORK OPERATIONS CENTER)						**2.50**		**$1.73**
Total For Service:						**62.20**		**$43.38**

NONRECURRING COST DETAIL SUMMARY

Study Name: NONRECURRING ELEMENTS
Study Year: 2002
Analyst: Deffley/Eoriatti
Product Group: Interconnection

State: South Dakota

	Work Item	Time Minutes	Prob #1	Prob #2	Prob #3	Prob #4	Applied Time (Minutes)	Labor /Hour	Cost
	A	B	C	D	E	F	G	H	I
							B * (C Thru F)		H * (G/60)

UPS CUSTOMER CHANNEL AND CLEC PROVIDED LOOP (con't)

		Cost Calculation		Cost Factor	Cost
		B	C	D	E
29522	**Direct Cost**				$43.38
29523					
29524					
29525					
29526					
29527	***Marketing & Business Fees***				
29528	Product Management Expense	D29528*E29522		0.019957	$0.87
29529	Sales Expense	D29529*E29522		0.011877	$0.52
29530	Product Advertising Expense	D29530*E29522		0.000000	$0.00
29531	Business Fees (Other Operating Taxes)	D29531*Sum(E29522:E29530)		0.001483	$0.07
29532	***Total Marketing & Business Fees***	Sum(E29522:E29531)			$1.45
29533					
29534	***Sub-Total Direct Cost & Marketing***	E29522+E29532			$44.83
29535					
29536	***Other Direct Expenses***				
29537	Network Operations	D29537*E29534		0.034832	$1.56
29538	Network Support Assets	D29538*E29534		0.014703	$0.66
29539	General Support Assets	D29539*E29534		0.088742	$3.98
29540	General Purpose Computers	D29540*E29534		0.043342	$1.94
29541	Uncollectible	D29541*E29534		0.003786	$0.17
29542	Accounting & Finance Expense	D29542*E29534		0.007346	$0.33
29543	Human Resources Expense	D29543*E29534		0.008294	$0.37
29544	Information Management Expense	D29544*E29534		0.070887	$3.18
29545	Intangibles	D29545*E29534		0.000000	$0.00
29546	***Total Other Direct Expenses***	Sum(E29537:E29545)			$12.19
29547					
29548	***TELRIC***	E29537+E29546			$57.02
29549					
29550	***Common***				
29551	Executive Expense	D29551*E29548		0.011267	$0.64
29552	Planning Expense	D29552*E29548		0.000525	$0.03
29553	External Relations Expense	D29553*E29548		0.037846	$2.16
29554	Legal Expense	D29554*E29548		0.004717	$0.27
29555	Other Procurement Expense	D29555*E29548		0.001860	$0.11
29556	Research & Development Expense	D29556*E29548		0.000006	$0.00
29557	Other General and Admin Expense	D29557*E29548		0.015064	$0.86
29558	***Common Costs***	Sum(E29551:E29557)			$4.06
29559					
29560	***TELRIC + Common Costs***	E29548+E29558			$61.09

NONRECURRING COST DETAIL SUMMARY

Study Name: NONRECURRING ELEMENTS
Study Year: 2002
Analyst: Deffley/Eoriatti
Product Group: Interconnection

State: South Dakota

ENRC Version: 2.16
Date: 06/03/02

Work Item	Time Minutes	Prob #1	Prob #2	Prob #3	Prob #4	Applied Time (Minutes)	Labor /Hour	Cost
A	B	C	D	E	F	G	H	I
						B * (C Thru F)		H * (G/60)
UPS DS1/DS3 ATM SWITCH INTERFACE PORT								
ADD								
-SERVICE DELIVERY COORDINATOR								
ANALYSIS OF REQUEST TO DETERMINE TYPE OF SERVICE, DESIRED SERVICE LEVEL, D	5	1.000				5.00	$40.03	$3.34
VALIDATE CONNECTING FACILITY ARRANGEMENT (CFA), NETWORK CHANNEL/NETWOR	2	1.000				2.00	$40.03	$1.33
NAME COMMON LANGUAGE FACILITY (CLF) & ESTABLISH FACILITY EQUIPMENT PLANNI	10	1.000				10.00	$40.03	$6.67
DETERMINE CRITICAL DATES	5	1.000				5.00	$40.03	$3.34
CONFIRM FIRM ORDER CONFIRMATION (FOC) LOCAL SERVICE REQUEST (LSR)	5	1.000				5.00	$40.03	$3.34
ISSUE SERVICE ORDER	15	1.000				15.00	$40.03	$10.01
CHECK FOR SERVICE ORDER ACCESS CONTROLLER ERRORS	5	1.000				5.00	$40.03	$3.34
ORDER COMPLETION	5	1.000				5.00	$40.03	$3.34
Subtotal - SERVICE DELIVERY COORDINATOR						**52.00**		**$34.69**
-DESIGN								
% manual handling								
Log/Verify Facility	45	0.050				2.25	$44.31	$1.66
Log/Verify Facility	25	0.950				23.75	$44.31	$17.54
Build/Validate DRI & WA	6	0.050				0.30	$44.31	$0.22
Build/Validate DRI & WA	3	0.950				2.85	$44.31	$2.10
Build/Verify CD	15	0.200				3.00	$44.31	$2.22
Build/Verify CD	5	0.800				4.00	$44.31	$2.95
Distribute Documents	4	1.000				4.00	$44.31	$2.95
Subtotal - DESIGN						**40.15**		**$29.65**
-CENTRAL OFFICE TECHNICIAN								
ANALYZE ORDER	5	1.000				5.00	$43.81	$3.65
COMPLETE CROSS CONNECT	10	1.000				10.00	$43.81	$7.30
PERFORM CONFORMANCE TESTING	20	1.000				20.00	$43.81	$14.60
Complete DD work status with CCT-I	3	1.000				3.00	$43.81	$2.19
Post DVA work complete in WFA-DI	2	1.000				2.00	$43.81	$1.46
Subtotal - CENTRAL OFFICE TECHNICIAN						**40.00**		**$29.21**
-SERVICE DELIVERY IMPLEMENTOR								
SCREEN WORK FORCE ADMINISTRATION (WFA) FOR CIRCUIT	5	1.000				5.00	$43.81	$3.65
VERIFY COMPLETION WITH LOCAL NETWORK ORGANIZATION (LNO)	5	1.000				5.00	$43.81	$3.65
MONITOR PERFORMANCE TESTING	15	1.000				15.00	$43.81	$10.95
NOTIFY CO-PROVIDER OF WORK COMPLETION	5	1.000				5.00	$43.81	$3.65
POST ORDER COMPLETE WORK FORCE ADMINISTRATION / CONTROL (WFA-C)	10	1.000				10.00	$43.81	$7.30

NONRECURRING COST DETAIL SUMMARY

Study Name: NONRECURRING ELEMENTS
Study Year: 2002
Analyst: Deffley/Eoriatti
Product Group: Interconnection

State: South Dakota

ENRC Version: 2.16
Date: 06/03/02

Work Item	Time Minutes	Prob #1	Prob #2	Prob #3	Prob #4	Applied Time (Minutes)	Labor /Hour	Cost
A	B	C	D	E	F	G	H	I
						B * (C Thru F)		H * (G/60)
UPS DS1/DS3 ATM SWITCH INTERFACE PORT (con't)								
Subtotal - SERVICE DELIVERY IMPLEMENTOR						**40.00**		**$29.21**
DISCONNECT								
-SERVICE DELIVERY COORDINATOR								
ANALYSIS OF REQUEST FOR ACCURACY	5	1.000				5.00	$40.03	$3.34
VERIFY EXISTING ACCOUNT ACTIVITY AND OBTAIN CLOSING BILL INFORMATION	2	1.000				2.00	$40.03	$1.33
CHECK FOR SERVICE ORDER ACCESS CONTROLLER ERRORS	5	1.000				5.00	$40.03	$3.34
ORDER COMPLETION	5	1.000				5.00	$40.03	$3.34
ISSUE SERVICE ORDER	5	1.000				5.00	$40.03	$3.34
Subtotal - SERVICE DELIVERY COORDINATOR						**22.00**		**$14.68**
-DESIGN								
Prob #1 = % manual handled								
Log/Verify Facility	8	0.050				0.40	$44.31	$0.30
Log/Verify Facility	3	0.950				2.85	$44.31	$2.10
Build/Validate WA	5	0.050				0.25	$44.31	$0.18
Build/Validate WA	2	0.950				1.90	$44.31	$1.40
Build/Verify CD	3	0.050				0.15	$44.31	$0.11
Build/Verify CD	2	0.950				1.90	$44.31	$1.40
Distribute Documents	2	1.000				2.00	$44.31	$1.48
Subtotal - DESIGN						**9.45**		**$6.98**
-CENTRAL OFFICE TECHNICIAN								
ANALYZE ORDER	5	1.000				5.00	$43.81	$3.65
REMOVE CROSS CONNECT	5	1.000				5.00	$43.81	$3.65
COMPLETE WORK REQUEST IN WORK FORCE ADMINISTRATION - DISPATCH IN MODULE	2	1.000				2.00	$43.81	$1.46
Subtotal - CENTRAL OFFICE TECHNICIAN						**12.00**		**$8.76**
-SERVICE DELIVERY IMPLEMENTOR								
SCREEN WORK FORCE ADMINISTRATION (WFA) FOR CIRCUIT	5	1.000				5.00	$43.81	$3.65
CONTACT CO-PROVIDER	5	1.000				5.00	$43.81	$3.65
COMPELTE ORDER IN WORK FORCE ADMINISTRATION-CIRCUIT (WFA-C)	5	1.000				5.00	$43.81	$3.65
Subtotal - SERVICE DELIVERY IMPLEMENTOR						**15.00**		**$10.95**
Total For Service:						**230.60**		**$164.13**

NONRECURRING COST DETAIL SUMMARY

Study Name: NONRECURRING ELEMENTS
Study Year: 2002
Analyst: Deffley/Eoriatti
Product Group: Interconnection

State: South Dakota

	Work Item	Time Minutes	Prob #1	Prob #2	Prob #3	Prob #4	Applied Time (Minutes)	Labor /Hour	Cost
	A	B	C	D	E	F	G	H	I
							B * (C Thru F)		H * (G/60)

UPS DS1/DS3 ATM SWITCH INTERFACE PORT (con't)

29657	**Direct Cost**					$164.13
29658						
29659		Cost Calculation			Cost Factor	Cost
29660		B		C	D	E
29661						
29662	***Marketing & Business Fees***					
29663	Product Management Expense	D29663*E29657			0.019957	$3.28
29664	Sales Expense	D29664*E29657			0.011877	$1.95
29665	Product Advertising Expense	D29665*E29657			0.000000	$0.00
29666	Business Fees (Other Operating Taxes)	D29666*Sum(E29657:E29665)			0.001483	$0.25
29667	***Total Marketing & Business Fees***	Sum(E29657:E29666)				$5.48
29668						
29669	***Sub-Total Direct Cost & Marketing***	E29657+E29667				$169.60
29670						
29671	***Other Direct Expenses***					
29672	Network Operations	D29672*E29669			0.034832	$5.91
29673	Network Support Assets	D29673*E29669			0.014703	$2.49
29674	General Support Assets	D29674*E29669			0.088742	$15.05
29675	General Purpose Computers	D29675*E29669			0.043342	$7.35
29676	Uncollectible	D29676*E29669			0.003786	$0.64
29677	Accounting & Finance Expense	D29677*E29669			0.007346	$1.25
29678	Human Resources Expense	D29678*E29669			0.008294	$1.41
29679	Information Management Expense	D29679*E29669			0.070887	$12.02
29680	Intangibles	D29680*E29669			0.000000	$0.00
29681	***Total Other Direct Expenses***	Sum(E29672:E29680)				$46.12
29682						
29683	***TELRIC***	E29672+E29681				$215.72
29684						
29685	***Common***					
29686	Executive Expense	D29686*E29683			0.011267	$2.43
29687	Planning Expense	D29687*E29683			0.000525	$0.11
29688	External Relations Expense	D29688*E29683			0.037846	$8.16
29689	Legal Expense	D29689*E29683			0.004717	$1.02
29690	Other Procurement Expense	D29690*E29683			0.001860	$0.40
29691	Research & Development Expense	D29691*E29683			0.000006	$0.00
29692	Other General and Admin Expense	D29692*E29683			0.015064	$3.25
29693	***Common Costs***	Sum(E29686:E29692)				$15.38
29694						
29695	***TELRIC + Common Costs***	E29683+E29693				$231.10

NONRECURRING COST DETAIL SUMMARY

Study Name: NONRECURRING ELEMENTS
Study Year: 2002
Analyst: Deffley/Eoriatti
Product Group: Interconnection

State: South Dakota

ENRC Version: 2.16
Date: 06/03/02

Work Item	Time Minutes	Prob #1	Prob #2	Prob #3	Prob #4	Applied Time (Minutes)	Labor /Hour	Cost
A	B	C	D	E	F	G	H	I
						B * (C Thru F)		H * (G/60)

10.1.2 - LNP MANAGED CUTS - STANDARD MANAGED CUTS PER PERSON, PER 1/2 HR.

ADD

-L10 LOCAL ASSIGNMENT/DISPATCH, 6623.123 CUSTOMER SERVICE

Standard Time Labor Rate								$37.37
Subtotal - L10 LOCAL ASSIGNMENT/DISPATCH, 6623.123 CUSTOMER SERVICE						**0.00**		**$37.37**
Total For Service:						**0.00**		**$37.37**

NONRECURRING COST DETAIL SUMMARY

Study Name: NONRECURRING ELEMENTS
Study Year: 2002
Analyst: Deffley/Eoriatti
Product Group: Interconnection

State: South Dakota

	Work Item	Time Minutes	Prob #1	Prob #2	Prob #3	Prob #4	Applied Time (Minutes)	Labor /Hour	Cost
	A	B	C	D	E	F	G	H	I
							B * (C Thru F)		H * (G/60)

10.1.2 - LNP MANAGED CUTS - STANDARD MANAGED CUTS PER PERSON, PER 1/2 HR. (con't)

29747	**Direct Cost**				$37.37
29748					
29749		Cost Calculation		Cost Factor	Cost
29750		B	C	D	E
29751					
29752	***Marketing & Business Fees***				
29753	Product Management Expense	D29753*E29747		0.019957	$0.75
29754	Sales Expense	D29754*E29747		0.011877	$0.44
29755	Product Advertising Expense	D29755*E29747		0.000000	$0.00
29756	Business Fees (Other Operating Taxes)	D29756*Sum(E29747:E29755)		0.001483	$0.06
29757	***Total Marketing & Business Fees***	Sum(E29747:E29756)			$1.25
29758					
29759	***Sub-Total Direct Cost & Marketing***	E29747+E29757			$38.62
29760					
29761	***Other Direct Expenses***				
29762	Network Operations	D29762*E29759		0.034832	$1.35
29763	Network Support Assets	D29763*E29759		0.014703	$0.57
29764	General Support Assets	D29764*E29759		0.088742	$3.43
29765	General Purpose Computers	D29765*E29759		0.043342	$1.67
29766	Uncollectible	D29766*E29759		0.003786	$0.15
29767	Accounting & Finance Expense	D29767*E29759		0.007346	$0.28
29768	Human Resources Expense	D29768*E29759		0.008294	$0.32
29769	Information Management Expense	D29769*E29759		0.070887	$2.74
29770	Intangibles	D29770*E29759		0.000000	$0.00
29771	***Total Other Direct Expenses***	Sum(E29762:E29770)			$10.50
29772					
29773	***TELRIC***	E29762+E29771			$49.12
29774					
29775	***Common***				
29776	Executive Expense	D29776*E29773		0.011267	$0.55
29777	Planning Expense	D29777*E29773		0.000525	$0.03
29778	External Relations Expense	D29778*E29773		0.037846	$1.86
29779	Legal Expense	D29779*E29773		0.004717	$0.23
29780	Other Procurement Expense	D29780*E29773		0.001860	$0.09
29781	Research & Development Expense	D29781*E29773		0.000006	$0.00
29782	Other General and Admin Expense	D29782*E29773		0.015064	$0.74
29783	***Common Costs***	Sum(E29776:E29782)			$3.50
29784					
29785	***TELRIC + Common Costs***	E29773+E29783			$52.62

NONRECURRING COST DETAIL SUMMARY

Study Name: NONRECURRING ELEMENTS
Study Year: 2002
Analyst: Deffley/Eoriatti
Product Group: Interconnection

ENRC Version: 2.16
Date: 06/03/02

State: South Dakota

Work Item	Time Minutes	Prob #1	Prob #2	Prob #3	Prob #4	Applied Time (Minutes)	Labor /Hour	Cost
A	B	C	D	E	F	G	H	I
						B * (C Thru F)		H * (G/60)

10.1.2 - LNP MANAGED CUTS - OVERTIME MANAGED CUTS PER PERSON, PER 1/2 HR.

ADD

-L10 LOCAL ASSIGNMENT/DISPATCH, 6623.123 CUSTOMER SERVICE

Overtime Time Labor Rate								$48.63
Subtotal - L10 LOCAL ASSIGNMENT/DISPATCH, 6623.123 CUSTOMER SERVICE						**0.00**		**$48.63**
Total For Service:						**0.00**		**$48.63**

NONRECURRING COST DETAIL SUMMARY

Study Name: NONRECURRING ELEMENTS
Study Year: 2002
Analyst: Deffley/Eoriatti
Product Group: Interconnection

State: South Dakota

	Work Item	Time Minutes	Prob #1	Prob #2	Prob #3	Prob #4	Applied Time (Minutes)	Labor /Hour	Cost
	A	B	C	D	E	F	G	H	I
							B * (C Thru F)		H * (G/60)

10.1.2 - LNP MANAGED CUTS - OVERTIME MANAGED CUTS PER PERSON, PER 1/2 HR. (con't,

29837	**Direct Cost**					$46.63
29838						
29839		**Cost Calculation**			**Cost Factor**	**Cost**
29840		**B**		**C**	**D**	**E**
29841						
29842	***Marketing & Business Fees***					
29843	Product Management Expense	**D29843*E29837**			0.019957	$0.97
29844	Sales Expense	**D29844*E29837**			0.011877	$0.58
29845	Product Advertising Expense	**D29845*E29837**			0.000000	$0.00
29846	Business Fees (Other Operating Taxes)	**D29846*Sum(E29837:E29845)**			0.001483	$0.07
29847	***Total Marketing & Business Fees***	**Sum(E29837:E29846)**				$1.62
29848						
29849	***Sub-Total Direct Cost & Marketing***	**E29837+E29847**				$50.25
29850						
29851	***Other Direct Expenses***					
29852	Network Operations	**D29852*E29849**			0.034832	$1.75
29853	Network Support Assets	**D29853*E29849**			0.014703	$0.74
29854	General Support Assets	**D29854*E29849**			0.088742	$4.46
29855	General Purpose Computers	**D29855*E29849**			0.043342	$2.18
29856	Uncollectible	**D29856*E29849**			0.003786	$0.19
29857	Accounting & Finance Expense	**D29857*E29849**			0.007346	$0.37
29858	Human Resources Expense	**D29858*E29849**			0.008294	$0.42
29859	Information Management Expense	**D29859*E29849**			0.070887	$3.56
29860	Intangibles	**D29860*E29849**			0.000000	$0.00
29861	***Total Other Direct Expenses***	**Sum(E29852:E29860)**				$13.67
29862						
29863	***TELRIC***	**E29852+E29861**				$63.92
29864						
29865	***Common***					
29866	Executive Expense	**D29866*E29863**			0.011267	$0.72
29867	Planning Expense	**D29867*E29863**			0.000525	$0.03
29868	External Relations Expense	**D29868*E29863**			0.037846	$2.42
29869	Legal Expense	**D29869*E29863**			0.004717	$0.30
29870	Other Procurement Expense	**D29870*E29863**			0.001860	$0.12
29871	Research & Development Expense	**D29871*E29863**			0.000006	$0.00
29872	Other General and Admin Expense	**D29872*E29863**			0.015064	$0.96
29873	***Common Costs***	**Sum(E29866:E29872)**				$4.56
29874						
29875	***TELRIC + Common Costs***	**E29863+E29873**				$68.47

NONRECURRING COST DETAIL SUMMARY

Study Name: NONRECURRING ELEMENTS
Study Year: 2002
Analyst: Deffley/Eoriatti
Product Group: Interconnection

ENRC Version: 2.16
Date: 06/03/02

State: South Dakota

Work Item	Time Minutes	Prob #1	Prob #2	Prob #3	Prob #4	Applied Time (Minutes)	Labor /Hour	Cost
A	B	C	D	E	F	G B * (C Thru F)	H	I H * (G/60)
10.1.2 - LNP MANAGED CUTS - PREMIUM MANAGED CUTS PER PERSON, PER 1/2 HR.								
ADD								
-L10 LOCAL ASSIGNMENT/DISPATCH, 6623.123 CUSTOMER SERVICE								
Premium Time Labor Rate								$59.90
Subtotal - L10 LOCAL ASSIGNMENT/DISPATCH, 6623.123 CUSTOMER SERVICE						**0.00**		**$59.90**
Total For Service:						**0.00**		**$59.90**

NONRECURRING COST DETAIL SUMMARY

Study Name: NONRECURRING ELEMENTS
Study Year: 2002
Analyst: Deffley/Eoriatti
Product Group: Interconnection

State: South Dakota

Work Item	Time Minutes	Prob #1	Prob #2	Prob #3	Prob #4	Applied Time (Minutes)	Labor /Hour	Cost
A	B	C	D	E	F	G	H	I
						B * (C Thru F)		H * (G/60)

10.1.2 - LNP MANAGED CUTS - PREMIUM MANAGED CUTS PER PERSON, PER 1/2 HR. (con't,

		Cost Calculation		Cost Factor	Cost
		B	C	D	E
29927	**Direct Cost**				$59.90
29928					
29929					
29930					
29931					
29932	***Marketing & Business Fees***				
29933	Product Management Expense	D29933*E29927		0.019957	$1.20
29934	Sales Expense	D29934*E29927		0.011877	$0.71
29935	Product Advertising Expense	D29935*E29927		0.000000	$0.00
29936	Business Fees (Other Operating Taxes)	D29936*Sum(E29927:E29935)		0.001483	$0.09
29937	***Total Marketing & Business Fees***	Sum(E29927:E29936)			$2.00
29938					
29939	***Sub-Total Direct Cost & Marketing***	E29927+E29937			$61.90
29940					
29941	***Other Direct Expenses***				
29942	Network Operations	D29942*E29939		0.034832	$2.16
29943	Network Support Assets	D29943*E29939		0.014703	$0.91
29944	General Support Assets	D29944*E29939		0.088742	$5.49
29945	General Purpose Computers	D29945*E29939		0.043342	$2.68
29946	Uncollectible	D29946*E29939		0.003786	$0.23
29947	Accounting & Finance Expense	D29947*E29939		0.007346	$0.45
29948	Human Resources Expense	D29948*E29939		0.008294	$0.51
29949	Information Management Expense	D29949*E29939		0.070887	$4.39
29950	Intangibles	D29950*E29939		0.000000	$0.00
29951	***Total Other Direct Expenses***	Sum(E29942:E29950)			$16.83
29952					
29953	***TELRIC***	E29942+E29951			$78.73
29954					
29955	***Common***				
29956	Executive Expense	D29956*E29953		0.011267	$0.89
29957	Planning Expense	D29957*E29953		0.000525	$0.04
29958	External Relations Expense	D29958*E29953		0.037846	$2.98
29959	Legal Expense	D29959*E29953		0.004717	$0.37
29960	Other Procurement Expense	D29960*E29953		0.001860	$0.15
29961	Research & Development Expense	D29961*E29953		0.000006	$0.00
29962	Other General and Admin Expense	D29962*E29953		0.015064	$1.19
29963	***Common Costs***	Sum(E29956:E29962)			$5.61
29964					
29965	***TELRIC + Common Costs***	E29953+E29963			$84.34

NONRECURRING COST DETAIL SUMMARY

Study Name: NONRECURRING ELEMENTS
Study Year: 2002
Analyst: Deffley/Eoriatti
Product Group: Interconnection

ENRC Version: 2.16
Date: 06/03/02

State: South Dakota

Work Item	Time Minutes	Prob #1	Prob #2	Prob #3	Prob #4	Applied Time (Minutes)	Labor /Hour	Cost
A	B	C	D	E	F	G	H	I
						B * (C Thru F)		H * (G/60)
POLE INQUIRY FEE - PER INQUIRY								
ADD								
-SERVICE SUPPORT TEAM								
Receive request from CLEC via email	5	1.000				5.00	$40.03	$3.34
Identify BAN#, return to CLEC with form 1A	10	1.000				10.00	$40.03	$6.67
Receive form 1A completed by CLEC with electronic map, review for completeness	10	1.000				10.00	$40.03	$6.67
Forward package to CPMC	5	1.000				5.00	$40.03	$3.34
Subtotal - SERVICE SUPPORT TEAM						**30.00**		**$20.02**
-COLLOCATION PROJECT MANAEMENT CENTER - CPMC								
Review for completeness and resolve discrepancies	30	1.000				30.00	$56.97	$28.49
Create log in database with appropriate dates.	20	1.000				20.00	$56.97	$18.99
Based on information provided, determine and verify field engineering contacts	15	1.000				15.00	$56.97	$14.24
Make copies for appropriate work groups and distribute	45	1.000				45.00	$56.97	$42.73
Act as point of contact between engineering and acct exec for any issues	60	1.000				60.00	$56.97	$56.97
Track and escalte as required to ensure that time frames are met	75	1.000				75.00	$56.97	$71.21
Subtotal - COLLOCATION PROJECT MANAEMENT CENTER - CPMC						**245.00**		**$232.63**
-OUTSIDE PLANT ENGINEERING - FIELD ENGR. (OSP)								
Review route requested in database. Prepare to meet with co-provider to do field verify	72	1.000				72.00	$51.76	$62.11
Subtotal - OUTSIDE PLANT ENGINEERING - FIELD ENGR. (OSP)						**72.00**		**$62.11**
Total For Service:						**347.00**		**$314.75**

NONRECURRING COST DETAIL SUMMARY

Study Name: NONRECURRING ELEMENTS
Study Year: 2002
Analyst: Deffley/Eoriatti
Product Group: Interconnection

State: South Dakota

	Work Item	Time Minutes	Prob #1	Prob #2	Prob #3	Prob #4	Applied Time (Minutes)	Labor /Hour	Cost
	A	B	C	D	E	F	G	H	I
							B * (C Thru F)		H * (G/60)

POLE INQUIRY FEE - PER INQUIRY (con't)

30017	**Direct Cost**					$314.75
30018						
30019		Cost Calculation			Cost Factor	Cost
30020		B	C		D	E
30021						
30022	***Marketing & Business Fees***					
30023	Product Management Expense	D30023*E30017			0.019957	$6.28
30024	Sales Expense	D30024*E30017			0.011877	$3.74
30025	Product Advertising Expense	D30025*E30017			0.000000	$0.00
30026	Business Fees (Other Operating Taxes)	D30026*Sum(E30017:E30025)			0.001483	$0.48
30027	***Total Marketing & Business Fees***	Sum(E30017:E30026)				$10.50
30028						
30029	***Sub-Total Direct Cost & Marketing***	E30017+E30027				$325.26
30030						
30031	***Other Direct Expenses***					
30032	Network Operations	D30032*E30029			0.034832	$11.33
30033	Network Support Assets	D30033*E30029			0.014703	$4.78
30034	General Support Assets	D30034*E30029			0.088742	$28.86
30035	General Purpose Computers	D30035*E30029			0.043342	$14.10
30036	Uncollectible	D30036*E30029			0.003786	$1.23
30037	Accounting & Finance Expense	D30037*E30029			0.007346	$2.39
30038	Human Resources Expense	D30038*E30029			0.008294	$2.70
30039	Information Management Expense	D30039*E30029			0.070887	$23.06
30040	Intangibles	D30040*E30029			0.000000	$0.00
30041	***Total Other Direct Expenses***	Sum(E30032:E30040)				$88.45
30042						
30043	***TELRIC***	E30032+E30041				$413.70
30044						
30045	***Common***					
30046	Executive Expense	D30046*E30043			0.011267	$4.66
30047	Planning Expense	D30047*E30043			0.000525	$0.22
30048	External Relations Expense	D30048*E30043			0.037846	$15.66
30049	Legal Expense	D30049*E30043			0.004717	$1.95
30050	Other Procurement Expense	D30050*E30043			0.001860	$0.77
30051	Research & Development Expense	D30051*E30043			0.000006	$0.00
30052	Other General and Admin Expense	D30052*E30043			0.015064	$6.23
30053	***Common Costs***	Sum(E30046:E30052)				$29.49
30054						
30055	***TELRIC + Common Costs***	E30043+E30053				$443.19

NONRECURRING COST DETAIL SUMMARY

Study Name: NONRECURRING ELEMENTS
Study Year: 2002
Analyst: Deffley/Eoriatti
Product Group: Interconnection

State: South Dakota

Work Item	Time Minutes	Prob #1	Prob #2	Prob #3	Prob #4	Applied Time (Minutes)	Labor /Hour	Cost
A	B	C	D	E	F	G B * (C Thru F)	H	I H * (G/60)
INNERDUCT INQUIRY FEE - PER INQUIRY								
ADD								
-SERVICE SUPPORT TEAM								
Receive request from CLEC via email	5	1.000				5.00	$40.03	$3.34
Identify BAN#, return to CLEC with form 1A	10	1.000				10.00	$40.03	$6.67
Receive form 1A completed by CLEC with electronic map, review for completeness	10	1.000				10.00	$40.03	$6.67
Forward package to CPMC	5	1.000				5.00	$40.03	$3.34
Subtotal - SERVICE SUPPORT TEAM						**30.00**		**$20.02**
-COLLOCATION PROJECT MANAEMENT CENTER - CPMC								
Review for completeness and resolve discrepancies	60	1.000				60.00	$56.97	$56.97
Create log in database with appropriate dates.	30	1.000				30.00	$56.97	$28.49
Review route requested in database, print copies, prepare/return to service support team	120	1.000				120.00	$56.97	$113.94
Subtotal - COLLOCATION PROJECT MANAEMENT CENTER - CPMC						**210.00**		**$199.40**
Total For Service:						**240.00**		**$219.41**

NONRECURRING COST DETAIL SUMMARY

Study Name: NONRECURRING ELEMENTS
Study Year: 2002
Analyst: Deffley/Eoriatti
Product Group: Interconnection

State: South Dakota

	Work Item	Time Minutes	Prob #1	Prob #2	Prob #3	Prob #4	Applied Time (Minutes)	Labor /Hour	Cost
	A	B	C	D	E	F	G	H	I
							B * (C Thru F)		H * (G/60)

INNERDUCT INQUIRY FEE - PER INQUIRY (con't,

		Cost Calculation		Cost Factor	Cost
		B	C	D	E
30107	**Direct Cost**				$219.41
30108					
30109					
30110					
30111					
30112	***Marketing & Business Fees***				
30113	Product Management Expense	D30113*E30107		0.019957	$4.38
30114	Sales Expense	D30114*E30107		0.011877	$2.61
30115	Product Advertising Expense	D30115*E30107		0.000000	$0.00
30116	Business Fees (Other Operating Taxes)	D30116*Sum(E30107:E30115)		0.001483	$0.34
30117	***Total Marketing & Business Fees***	Sum(E30107:E30116)			$7.32
30118					
30119	***Sub-Total Direct Cost & Marketing***	E30107+E30117			$226.73
30120					
30121	***Other Direct Expenses***				
30122	Network Operations	D30122*E30119		0.034832	$7.90
30123	Network Support Assets	D30123*E30119		0.014703	$3.33
30124	General Support Assets	D30124*E30119		0.088742	$20.12
30125	General Purpose Computers	D30125*E30119		0.043342	$9.83
30126	Uncollectible	D30126*E30119		0.003786	$0.86
30127	Accounting & Finance Expense	D30127*E30119		0.007346	$1.67
30128	Human Resources Expense	D30128*E30119		0.008294	$1.88
30129	Information Management Expense	D30129*E30119		0.070887	$16.07
30130	Intangibles	D30130*E30119		0.000000	$0.00
30131	***Total Other Direct Expenses***	Sum(E30122:E30130)			$61.66
30132					
30133	***TELRIC***	E30122+E30131			$288.39
30134					
30135	***Common***				
30136	Executive Expense	D30136*E30133		0.011267	$3.25
30137	Planning Expense	D30137*E30133		0.000525	$0.15
30138	External Relations Expense	D30138*E30133		0.037846	$10.91
30139	Legal Expense	D30139*E30133		0.004717	$1.36
30140	Other Procurement Expense	D30140*E30133		0.001860	$0.54
30141	Research & Development Expense	D30141*E30133		0.000006	$0.00
30142	Other General and Admin Expense	D30142*E30133		0.015064	$4.34
30143	***Common Costs***	Sum(E30136:E30142)			$20.56
30144					
30145	***TELRIC + Common Costs***	E30133+E30143			$308.94

NONRECURRING COST DETAIL SUMMARY

Study Name: NONRECURRING ELEMENTS
Study Year: 2002
Analyst: Deffley/Eoriatti
Product Group: Interconnection

ENRC Version: 2.16
Date: 06/03/02

State: South Dakota

Work Item	Time Minutes	Prob #1	Prob #2	Prob #3	Prob #4	Applied Time (Minutes)	Labor /Hour	Cost
A	B	C	D	E	F	G B * (C Thru F)	H	I H * (G/60)
RIGHT-OF-WAY INQUIRY PER INQUIRY								
ADD								
-COLLOCATION PROJECT MANAEMENT CENTER - CPMC								
Review for completeness and resolve discrepancies	30	1.000				30.00	$56.97	$28.49
Create log in database with appropriate dates.	20	1.000				20.00	$56.97	$18.99
Based on information provided, determine and verify field engineering contacts	15	1.000				15.00	$56.97	$14.24
Make copies for appropriate work groups and distribute	60	1.000				60.00	$56.97	$56.97
Act as point of contact between engineering and acct exec for any issues	75	1.000				75.00	$56.97	$71.21
Track and escalate as required to ensure that time frames are met	45	1.000				45.00	$56.97	$42.73
Subtotal - COLLOCATION PROJECT MANAEMENT CENTER - CPMC						**245.00**		**$232.63**
-RIGHT OF WAY MANAGER								
OSP staff manager receives request from CPMC, forwards to state row manager	15	1.000				15.00	$51.76	$12.94
State ROW manager gathers easement documents, forwards back to CPMC	120	1.000				120.00	$51.76	$103.52
Subtotal - RIGHT OF WAY MANAGER						**135.00**		**$116.46**
Total For Service:						**380.00**		**$349.09**

	Work Item	Time Minutes	Prob #1	Prob #2	Prob #3	Prob #4	Applied Time (Minutes)	Labor /Hour	Cost
	A	B	C	D	E	F	G	H	I
							B * (C Thru F)		H * (G/60)

RIGHT-OF-WAY INQUIRY PER INQUIRY (con't)

		Cost Calculation		Cost Factor	Cost
		B	C	D	E
30197	**Direct Cost**				$349.09
30198					
30199					
30200					
30201					
30202	***Marketing & Business Fees***				
30203	Product Management Expense	D30203*E30197		0.019957	$6.97
30204	Sales Expense	D30204*E30197		0.011877	$4.15
30205	Product Advertising Expense	D30205*E30197		0.000000	$0.00
30206	Business Fees (Other Operating Taxes)	D30206*Sum(E30197:E30205)		0.001483	$0.53
30207	***Total Marketing & Business Fees***	Sum(E30197:E30206)			$11.65
30208					
30209	***Sub-Total Direct Cost & Marketing***	E30197+E30207			$360.73
30210					
30211	***Other Direct Expenses***				
30212	Network Operations	D30212*E30209		0.034832	$12.57
30213	Network Support Assets	D30213*E30209		0.014703	$5.30
30214	General Support Assets	D30214*E30209		0.088742	$32.01
30215	General Purpose Computers	D30215*E30209		0.043342	$15.64
30216	Uncollectible	D30216*E30209		0.003786	$1.37
30217	Accounting & Finance Expense	D30217*E30209		0.007346	$2.65
30218	Human Resources Expense	D30218*E30209		0.008294	$2.99
30219	Information Management Expense	D30219*E30209		0.070887	$25.57
30220	Intangibles	D30220*E30209		0.000000	$0.00
30221	***Total Other Direct Expenses***	Sum(E30212:E30220)			$98.10
30222					
30223	***TELRIC***	E30212+E30221			$458.83
30224					
30225	***Common***				
30226	Executive Expense	D30226*E30223		0.011267	$5.17
30227	Planning Expense	D30227*E30223		0.000525	$0.24
30228	External Relations Expense	D30228*E30223		0.037846	$17.36
30229	Legal Expense	D30229*E30223		0.004717	$2.16
30230	Other Procurement Expense	D30230*E30223		0.001860	$0.85
30231	Research & Development Expense	D30231*E30223		0.000006	$0.00
30232	Other General and Admin Expense	D30232*E30223		0.015064	$6.91
30233	***Common Costs***	Sum(E30226:E30232)			$32.71
30234					
30235	***TELRIC + Common Costs***	E30223+E30233			$491.54

NONRECURRING COST DETAIL SUMMARY

Study Name: NONRECURRING ELEMENTS
Study Year: 2002
Analyst: Deffley/Eoriatti
Product Group: Interconnection

State: South Dakota

Work Item	Time Minutes	Prob #1	Prob #2	Prob #3	Prob #4	Applied Time (Minutes)	Labor /Hour	Cost
A	B	C	D	E	F	G B * (C Thru F)	H	I H * (G/60)
RIGHT-OF-WAY DOCUMENT PREPARATION								
ADD								
-RIGHT OF WAY MANAGER								
Prepare Quit Claim deed when requested by CLEC	120	1.000				120.00	$51.76	$103.52
Subtotal - RIGHT OF WAY MANAGER						**120.00**		**$103.52**
Total For Service:						**120.00**		**$103.52**

NONRECURRING COST DETAIL SUMMARY

Study Name: NONRECURRING ELEMENTS
Study Year: 2002
Analyst: Deffley/Eoriatti
Product Group: Interconnection

State: South Dakota

Work Item	Time Minutes	Prob #1	Prob #2	Prob #3	Prob #4	Applied Time (Minutes)	Labor /Hour	Cost
A	B	C	D	E	F	G	H	I
						B * (C Thru F)		H * (G/60)

RIGHT-OF-WAY DOCUMENT PREPARATION (con't)

		Cost Calculation		Cost Factor	Cost
		B	C	D	E
30287	**Direct Cost**				$103.52
30288					
30289					
30290					
30291					
30292	***Marketing & Business Fees***				
30293	Product Management Expense	D30293*E30287		0.019957	$2.07
30294	Sales Expense	D30294*E30287		0.011877	$1.23
30295	Product Advertising Expense	D30295*E30287		0.000000	$0.00
30296	Business Fees (Other Operating Taxes)	D30296*Sum(E30287:E30295)		0.001483	$0.16
30297	***Total Marketing & Business Fees***	Sum(E30287:E30296)			$3.45
30298					
30299	***Sub-Total Direct Cost & Marketing***	E30287+E30297			$106.97
30300					
30301	***Other Direct Expenses***				
30302	Network Operations	D30302*E30299		0.034832	$3.73
30303	Network Support Assets	D30303*E30299		0.014703	$1.57
30304	General Support Assets	D30304*E30299		0.088742	$9.49
30305	General Purpose Computers	D30305*E30299		0.043342	$4.64
30306	Uncollectible	D30306*E30299		0.003786	$0.40
30307	Accounting & Finance Expense	D30307*E30299		0.007346	$0.79
30308	Human Resources Expense	D30308*E30299		0.008294	$0.89
30309	Information Management Expense	D30309*E30299		0.070887	$7.58
30310	Intangibles	D30310*E30299		0.000000	$0.00
30311	***Total Other Direct Expenses***	Sum(E30302:E30310)			$29.09
30312					
30313	***TELRIC***	E30302+E30311			$136.06
30314					
30315	***Common***				
30316	Executive Expense	D30316*E30313		0.011267	$1.53
30317	Planning Expense	D30317*E30313		0.000525	$0.07
30318	External Relations Expense	D30318*E30313		0.037846	$5.15
30319	Legal Expense	D30319*E30313		0.004717	$0.64
30320	Other Procurement Expense	D30320*E30313		0.001860	$0.25
30321	Research & Development Expense	D30321*E30313		0.000006	$0.00
30322	Other General and Admin Expense	D30322*E30313		0.015064	$2.05
30323	***Common Costs***	Sum(E30316:E30322)			$9.70
30324					
30325	***TELRIC + Common Costs***	E30313+E30323			$145.76

NONRECURRING COST DETAIL SUMMARY

Study Name: NONRECURRING ELEMENTS
Study Year: 2002
Analyst: Deffley/Eoriatti
Product Group: Interconnection

ENRC Version: 2.16
Date: 06/03/02

State: South Dakota

Work Item	Time Minutes	Prob #1	Prob #2	Prob #3	Prob #4	Applied Time (Minutes)	Labor /Hour	Cost
A	B	C	D	E	F	G	H	I
						B * (C Thru F)		H * (G/60)
FIELD VERIFICATION FEE - POLES PER POLE								
ADD								
-OUTSIDE PLANT ENGINEERING - FIELD ENGR. (OSP)								
Make field visit, identify pole number, street code, ownership. Document forms.	20	1.000				20.00	$51.76	$17.25
Subtotal - OUTSIDE PLANT ENGINEERING - FIELD ENGR. (OSP)						**20.00**		**$17.25**
Total For Service:						**20.00**		**$17.25**

	Work Item	Time Minutes	Prob #1	Prob #2	Prob #3	Prob #4	Applied Time (Minutes)	Labor /Hour	Cost
	A	B	C	D	E	F	G	H	I
							B * (C Thru F)		H * (G/60)

FIELD VERIFICATION FEE - POLES PER POLE (con't)

		Cost Calculation		Cost Factor	Cost
		B	C	D	E
30377	**Direct Cost**				$17.25
30378					
30379					
30380					
30381					
30382	***Marketing & Business Fees***				
30383	Product Management Expense	D30383*E30377		0.019957	$0.34
30384	Sales Expense	D30384*E30377		0.011877	$0.20
30385	Product Advertising Expense	D30385*E30377		0.000000	$0.00
30386	Business Fees (Other Operating Taxes)	D30386*Sum(E30377:E30385)		0.001483	$0.03
30387	***Total Marketing & Business Fees***	Sum(E30377:E30386)			$0.58
30388					
30389	***Sub-Total Direct Cost & Marketing***	E30377+E30387			$17.83
30390					
30391	***Other Direct Expenses***				
30392	Network Operations	D30392*E30389		0.034832	$0.62
30393	Network Support Assets	D30393*E30389		0.014703	$0.26
30394	General Support Assets	D30394*E30389		0.088742	$1.58
30395	General Purpose Computers	D30395*E30389		0.043342	$0.77
30396	Uncollectible	D30396*E30389		0.003786	$0.07
30397	Accounting & Finance Expense	D30397*E30389		0.007346	$0.13
30398	Human Resources Expense	D30398*E30389		0.008294	$0.15
30399	Information Management Expense	D30399*E30389		0.070887	$1.26
30400	Intangibles	D30400*E30389		0.000000	$0.00
30401	***Total Other Direct Expenses***	Sum(E30392:E30400)			$4.85
30402					
30403	***TELRIC***	E30392+E30401			$22.68
30404					
30405	***Common***				
30406	Executive Expense	D30406*E30403		0.011267	$0.26
30407	Planning Expense	D30407*E30403		0.000525	$0.01
30408	External Relations Expense	D30408*E30403		0.037846	$0.86
30409	Legal Expense	D30409*E30403		0.004717	$0.11
30410	Other Procurement Expense	D30410*E30403		0.001860	$0.04
30411	Research & Development Expense	D30411*E30403		0.000006	$0.00
30412	Other General and Admin Expense	D30412*E30403		0.015064	$0.34
30413	***Common Costs***	Sum(E30406:E30412)			$1.62
30414					
30415	***TELRIC + Common Costs***	E30403+E30413			$24.29

NONRECURRING COST DETAIL SUMMARY

Study Name: NONRECURRING ELEMENTS
Study Year: 2002
Analyst: Deffley/Eoriatti
Product Group: Interconnection

ENRC Version: 2.16
Date: 06/03/02

State: South Dakota

Work Item	Time Minutes	Prob #1	Prob #2	Prob #3	Prob #4	Applied Time (Minutes)	Labor /Hour	Cost
A	B	C	D	E	F	G B * (C Thru F)	H	I H * (G/60)
FIELD VERIFICATION FEE - MANHOLES PER MANHOLE								
ADD								
-CONSTRUCTION MANAGEMENT CENTER (CMC)								
Probability represents 15 manholes per job. 1/15=.067								
Receive job for osp engr, schedule Net. Tech., open job and route to construction forces	87	0.067				5.83	$42.68	$4.15
Subtotal - CONSTRUCTION MANAGEMENT CENTER (CMC,						**5.83**		**$4.15**
-NETWORK TECHNICIAN - SPLICER								
Load truck, travel set up area, ventilate, test, pump, enter manhole, remove area protection, depa	90	1.000				90.00	$42.68	$64.02
Subtotal - NETWORK TECHNICIAN - SPLICER						**90.00**		**$64.02**
-OUTSIDE PLANT ENGINEERING - FIELD ENGR. (OSP)								
Make field visit, verify/identify issues at the proposed location.	20	1.000				20.00	$51.76	$17.25
Draw notes of existing facilities, send information to tactical planner	70	1.000				70.00	$51.76	$60.39
Subtotal - OUTSIDE PLANT ENGINEERING - FIELD ENGR. (OSP)						**90.00**		**$77.64**
Total For Service:						**185.83**		**$145.81**

NONRECURRING COST DETAIL SUMMARY

Study Name: NONRECURRING ELEMENTS
Study Year: 2002
Analyst: Deffley/Eoriatti
Product Group: Interconnection

State: South Dakota

	Work Item	Time Minutes	Prob #1	Prob #2	Prob #3	Prob #4	Applied Time (Minutes)	Labor /Hour	Cost
	A	B	C	D	E	F	G	H	I
							B * (C Thru F)		H * (G/60)

FIELD VERIFICATION FEE - MANHOLES PER MANHOLE (con't)

30467	**Direct Cost**				$145.81
30468					
30469		**Cost Calculation**		**Cost Factor**	**Cost**
30470		**B**	**C**	**D**	**E**
30471					
30472	***Marketing & Business Fees***				
30473	Product Management Expense	**D30473*E30467**		0.019957	$2.91
30474	Sales Expense	**D30474*E30467**		0.011877	$1.73
30475	Product Advertising Expense	**D30475*E30467**		0.000000	$0.00
30476	Business Fees (Other Operating Taxes)	**D30476*Sum(E30467:E30475)**		0.001483	$0.22
30477	***Total Marketing & Business Fees***	**Sum(E30467:E30476)**			$4.86
30478					
30479	***Sub-Total Direct Cost & Marketing***	**E30467+E30477**			$150.67
30480					
30481	***Other Direct Expenses***				
30482	Network Operations	**D30482*E30479**		0.034832	$5.25
30483	Network Support Assets	**D30483*E30479**		0.014703	$2.22
30484	General Support Assets	**D30484*E30479**		0.088742	$13.37
30485	General Purpose Computers	**D30485*E30479**		0.043342	$6.53
30486	Uncollectible	**D30486*E30479**		0.003786	$0.57
30487	Accounting & Finance Expense	**D30487*E30479**		0.007346	$1.11
30488	Human Resources Expense	**D30488*E30479**		0.008294	$1.25
30489	Information Management Expense	**D30489*E30479**		0.070887	$10.68
30490	Intangibles	**D30490*E30479**		0.000000	$0.00
30491	***Total Other Direct Expenses***	**Sum(E30482:E30490)**			$40.97
30492					
30493	***TELRIC***	**E30482+E30491**			$191.64
30494					
30495	***Common***				
30496	Executive Expense	**D30496*E30493**		0.011267	$2.16
30497	Planning Expense	**D30497*E30493**		0.000525	$0.10
30498	External Relations Expense	**D30498*E30493**		0.037846	$7.25
30499	Legal Expense	**D30499*E30493**		0.004717	$0.90
30500	Other Procurement Expense	**D30500*E30493**		0.001860	$0.36
30501	Research & Development Expense	**D30501*E30493**		0.000006	$0.00
30502	Other General and Admin Expense	**D30502*E30493**		0.015064	$2.89
30503	***Common Costs***	**Sum(E30496:E30502)**			$13.66
30504					
30505	***TELRIC + Common Costs***	**E30493+E30503**			$205.30

NONRECURRING COST DETAIL SUMMARY

Study Name: NONRECURRING ELEMENTS
Study Year: 2002
Analyst: Deffley/Eoriatti
Product Group: Interconnection

ENRC Version: 2.16
Date: 06/03/02

State: South Dakota

Work Item	Time Minutes	Prob #1	Prob #2	Prob #3	Prob #4	Applied Time (Minutes)	Labor /Hour	Cost
A	B	C	D	E	F	G	H	I
						B * (C Thru F)		H * (G/60)
PLANNER VERIFICATION Per Manhole								
ADD								
-TACTICAL PLANNING								
Records Review for manhole verification	15	1.000				15.00	$46.18	$11.55
Subtotal - TACTICAL PLANNING						**15.00**		**$11.55**
Total For Service:						**15.00**		**$11.55**

NONRECURRING COST DETAIL SUMMARY

Study Name: NONRECURRING ELEMENTS
Study Year: 2002
Analyst: Deffley/Eoriatti
Product Group: Interconnection

State: South Dakota

	Work Item	Time Minutes	Prob #1	Prob #2	Prob #3	Prob #4	Applied Time (Minutes)	Labor /Hour	Cost
	A	B	C	D	E	F	G	H	I
							B * (C Thru F)		H * (G/60)

PLANNER VERIFICATION Per Manhole (con't)

30557	**Direct Cost**					$11.55
30558						
30559		**Cost Calculation**			**Cost Factor**	**Cost**
30560						
30561		**B**	**C**		**D**	**E**
30562	***Marketing & Business Fees***					
30563	Product Management Expense	**D30563*E30557**			0.019957	$0.23
30564	Sales Expense	**D30564*E30557**			0.011877	$0.14
30565	Product Advertising Expense	**D30565*E30557**			0.000000	$0.00
30566	Business Fees (Other Operating Taxes)	**D30566*Sum(E30557:E30565)**			0.001483	$0.02
30567	***Total Marketing & Business Fees***	**Sum(E30557:E30566)**				$0.39
30568						
30569	***Sub-Total Direct Cost & Marketing***	**E30557+E30567**				$11.93
30570						
30571	***Other Direct Expenses***					
30572	Network Operations	**D30572*E30569**			0.034832	$0.42
30573	Network Support Assets	**D30573*E30569**			0.014703	$0.18
30574	General Support Assets	**D30574*E30569**			0.088742	$1.06
30575	General Purpose Computers	**D30575*E30569**			0.043342	$0.52
30576	Uncollectible	**D30576*E30569**			0.003786	$0.05
30577	Accounting & Finance Expense	**D30577*E30569**			0.007346	$0.09
30578	Human Resources Expense	**D30578*E30569**			0.008294	$0.10
30579	Information Management Expense	**D30579*E30569**			0.070887	$0.85
30580	Intangibles	**D30580*E30569**			0.000000	$0.00
30581	***Total Other Direct Expenses***	**Sum(E30572:E30580)**				$3.24
30582						
30583	***TELRIC***	**E30572+E30581**				$15.17
30584						
30585	***Common***					
30586	Executive Expense	**D30586*E30583**			0.011267	$0.17
30587	Planning Expense	**D30587*E30583**			0.000525	$0.01
30588	External Relations Expense	**D30588*E30583**			0.037846	$0.57
30589	Legal Expense	**D30589*E30583**			0.004717	$0.07
30590	Other Procurement Expense	**D30590*E30583**			0.001860	$0.03
30591	Research & Development Expense	**D30591*E30583**			0.000006	$0.00
30592	Other General and Admin Expense	**D30592*E30583**			0.015064	$0.23
30593	***Common Costs***	**Sum(E30586:E30592)**				$1.08
30594						
30595	***TELRIC + Common Costs***	**E30583+E30593**				$16.26

NONRECURRING COST DETAIL SUMMARY

Study Name: NONRECURRING ELEMENTS
Study Year: 2002
Analyst: Deffley/Eoriatti
Product Group: Interconnection

State: South Dakota

Work Item	Time Minutes	Prob #1	Prob #2	Prob #3	Prob #4	Applied Time (Minutes)	Labor /Hour	Cost
A	B	C	D	E	F	G	H	I
						B * (C Thru F)		H * (G/60)
MANHOLE VERIFICATION INSPECTOR Per Manhole								
ADD								
-OUTSIDE PLANT ENGINEERING - FIELD ENGR. (OSP)								
Inspector time during manhole verification	90	1.000				90.00	$51.76	$77.64
Subtotal - OUTSIDE PLANT ENGINEERING - FIELD ENGR. (OSP)						**90.00**		**$77.64**
Total For Service:						**90.00**		**$77.64**

NONRECURRING COST DETAIL SUMMARY

Study Name: NONRECURRING ELEMENTS
Study Year: 2002
Analyst: Deffley/Eoriatti
Product Group: Interconnection

State: South Dakota

	Work Item	Time Minutes	Prob #1	Prob #2	Prob #3	Prob #4	Applied Time (Minutes)	Labor /Hour	Cost
	A	B	C	D	E	F	G	H	I
							B * (C Thru F)		H * (G/60)

MANHOLE VERIFICATION INSPECTOR Per Manhole (con't)

30647	**Direct Cost**				$77.64
30648					
30649		**Cost Calculation**		**Cost Factor**	**Cost**
30650					
30651		B	C	D	E
30652	***Marketing & Business Fees***				
30653	Product Management Expense	D30653*E30647		0.019957	$1.55
30654	Sales Expense	D30654*E30647		0.011877	$0.92
30655	Product Advertising Expense	D30655*E30647		0.000000	$0.00
30656	Business Fees (Other Operating Taxes)	D30656*Sum(E30647:E30655)		0.001483	$0.12
30657	***Total Marketing & Business Fees***	Sum(E30647:E30656)			$2.59
30658					
30659	***Sub-Total Direct Cost & Marketing***	E30647+E30657			$80.23
30660					
30661	***Other Direct Expenses***				
30662	Network Operations	D30662*E30659		0.034832	$2.79
30663	Network Support Assets	D30663*E30659		0.014703	$1.18
30664	General Support Assets	D30664*E30659		0.088742	$7.12
30665	General Purpose Computers	D30665*E30659		0.043342	$3.48
30666	Uncollectible	D30666*E30659		0.003786	$0.30
30667	Accounting & Finance Expense	D30667*E30659		0.007346	$0.59
30668	Human Resources Expense	D30668*E30659		0.008294	$0.67
30669	Information Management Expense	D30669*E30659		0.070887	$5.69
30670	Intangibles	D30670*E30659		0.000000	$0.00
30671	***Total Other Direct Expenses***	Sum(E30662:E30670)			$21.82
30672					
30673	***TELRIC***	E30662+E30671			$102.05
30674					
30675	***Common***				
30676	Executive Expense	D30676*E30673		0.011267	$1.15
30677	Planning Expense	D30677*E30673		0.000525	$0.05
30678	External Relations Expense	D30678*E30673		0.037846	$3.86
30679	Legal Expense	D30679*E30673		0.004717	$0.48
30680	Other Procurement Expense	D30680*E30673		0.001860	$0.19
30681	Research & Development Expense	D30681*E30673		0.000006	$0.00
30682	Other General and Admin Expense	D30682*E30673		0.015064	$1.54
30683	***Common Costs***	Sum(E30676:E30682)			$7.27
30684					
30685	***TELRIC + Common Costs***	E30673+E30683			$109.32

NONRECURRING COST DETAIL SUMMARY

Study Name: NONRECURRING ELEMENTS
Study Year: 2002
Analyst: Deffley/Eoriatti
Product Group: Interconnection

State: South Dakota

Work Item	Time Minutes	Prob #1	Prob #2	Prob #3	Prob #4	Applied Time (Minutes)	Labor /Hour	Cost
A	B	C	D	E	F	G B * (C Thru F)	H	I H * (G/60)
MANHOLE MAKE-READY INSPECTOR Per Manhole								
ADD								
-OUTSIDE PLANT ENGINEERING - FIELD ENGR. (OSP)								
Inspector time during manhole innerduct placemen	240	1.000				240.00	$51.76	$207.04
Subtotal - OUTSIDE PLANT ENGINEERING - FIELD ENGR. (OSP)						**240.00**		**$207.04**
Total For Service:						**240.00**		**$207.04**

	Work Item	Time Minutes	Prob #1	Prob #2	Prob #3	Prob #4	Applied Time (Minutes)	Labor /Hour	Cost
	A	B	C	D	E	F	G	H	I
							B * (C Thru F)		H * (G/60)

MANHOLE MAKE-READY INSPECTOR Per Manhole (con't,

30737	**Direct Cost**				$207.04
30738					
30739		Cost Calculation		Cost Factor	Cost
30740		B	C	D	E
30741					
30742	***Marketing & Business Fees***				
30743	Product Management Expense	D30743*E30737		0.019957	$4.13
30744	Sales Expense	D30744*E30737		0.011877	$2.46
30745	Product Advertising Expense	D30745*E30737		0.000000	$0.00
30746	Business Fees (Other Operating Taxes)	D30746*Sum(E30737:E30745)		0.001483	$0.32
30747	***Total Marketing & Business Fees***	Sum(E30737:E30746)			$6.91
30748					
30749	***Sub-Total Direct Cost & Marketing***	E30737+E30747			$213.95
30750					
30751	***Other Direct Expenses***				
30752	Network Operations	D30752*E30749		0.034832	$7.45
30753	Network Support Assets	D30753*E30749		0.014703	$3.15
30754	General Support Assets	D30754*E30749		0.088742	$18.99
30755	General Purpose Computers	D30755*E30749		0.043342	$9.27
30756	Uncollectible	D30756*E30749		0.003786	$0.81
30757	Accounting & Finance Expense	D30757*E30749		0.007346	$1.57
30758	Human Resources Expense	D30758*E30749		0.008294	$1.77
30759	Information Management Expense	D30759*E30749		0.070887	$15.17
30760	Intangibles	D30760*E30749		0.000000	$0.00
30761	***Total Other Direct Expenses***	Sum(E30752:E30760)			$58.18
30762					
30763	***TELRIC***	E30752+E30761			$272.13
30764					
30765	***Common***				
30766	Executive Expense	D30766*E30763		0.011267	$3.07
30767	Planning Expense	D30767*E30763		0.000525	$0.14
30768	External Relations Expense	D30768*E30763		0.037846	$10.30
30769	Legal Expense	D30769*E30763		0.004717	$1.28
30770	Other Procurement Expense	D30770*E30763		0.001860	$0.51
30771	Research & Development Expense	D30771*E30763		0.000006	$0.00
30772	Other General and Admin Expense	D30772*E30763		0.015064	$4.10
30773	***Common Costs***	Sum(E30766:E30772)			$19.40
30774					
30775	***TELRIC + Common Costs***	E30763+E30773			$291.53

NONRECURRING COST DETAIL SUMMARY

Study Name: NONRECURRING ELEMENTS
Study Year: 2002
Analyst: Deffley/Eoriatti
Product Group: Interconnection

State: South Dakota

Work Item	Time Minutes	Prob #1	Prob #2	Prob #3	Prob #4	Applied Time (Minutes)	Labor /Hour	Cost
A	B	C	D	E	F	G B * (C Thru F)	H	I H * (G/60)
POLES, DUCTS, RIGHT OF WAY Transfer of Responsibility Fee								
ADD								
-SERVICE SUPPORT TEAM								
Receive request from CLEC via email	10	1.000				10.00	$40.03	$6.67
Validate contracts for both transfering and assuming CLECs	5	1.000				5.00	$40.03	$3.34
Send Electronic LOA and PDR Transfer of Responsibility Application form to CPMC via emai	2	1.000				2.00	$40.03	$1.33
Complete Qwest Transfer of Responsibility Consent Form	5	1.000				5.00	$40.03	$3.34
Nofice CLEC, CPMC and joint Use Group of date to complete trans via Qwest Trans of Resp Cor	5	1.000				5.00	$40.03	$3.34
File records completion notice from CPMC	2	1.000				2.00	$40.03	$1.33
Notice Assuming CLEC that PDR Transfer has been completed	5	1.000				5.00	$40.03	$3.34
Subtotal - SERVICE SUPPORT TEAM						**34.00**		**$22.68**
-COLLOCATION PROJECT MANAGEMENT CENTER - CPMC								
Receive and review electronic LOA and PDR Transfer of Responsibility Application from the SSC	2	1.000				2.00	$56.97	$1.90
Validate BAN Number(s)	5	1.000				5.00	$56.97	$4.75
Receive email from Deb Marshall to verify that payment has been received	2	1.000				2.00	$56.97	$1.90
Receive completed Qwest Transfer of Responsiblity Consent form from the SSC.	3	1.000				3.00	$56.97	$2.85
Determine OSP Field Engineer using Wire Center Information program	2	1.000				2.00	$56.97	$1.90
Compose and forward cover sheet with Request documents to OSP Field Engineer	8	1.000				8.00	$56.97	$7.60
Create CPMC job file, electronic folder, and enter into tracking system	10	1.000				10.00	$56.97	$9.50
Shared time for common phone calls, meetings, reports	3	1.000				3.00	$56.97	$2.85
Receive notice that records changes have been completed	3	1.000				3.00	$56.97	$2.85
Forward records completion notice to SSC	2	1.000				2.00	$56.97	$1.90
Update and close CPMC job file, electronic folder, and tracking system	5	1.000				5.00	$56.97	$4.75
Subtotal - COLLOCATION PROJECT MANAGEMENT CENTER - CPMC						**45.00**		**$42.73**
-OUTSIDE PLANT ENGINEERING - FIELD ENGR. (OSP)								
Receive notice of required records changes and due date	3	1.000				3.00	$51.76	$2.59
Access OSPFM or Cimage Database	5	1.000				5.00	$51.76	$4.31
Navigate OSPFM or Cimage Database	10	1.000				10.00	$51.76	$8.63
Update appropriate records in OSPFM or Cimage Database	5	1.000				5.00	$51.76	$4.31
Close OSPFM or Cimage Database	5	1.000				5.00	$51.76	$4.31
Send notice to CPMC of OSP record update completion	3	1.000				3.00	$51.76	$2.59
Subtotal - OUTSIDE PLANT ENGINEERING - FIELD ENGR. (OSP)						**31.00**		**$26.74**
Total For Service:						**110.00**		**$92.15**

	Work Item	Time Minutes	Prob #1	Prob #2	Prob #3	Prob #4	Applied Time (Minutes)	Labor /Hour	Cost
	A	B	C	D	E	F	G	H	I
							B * (C Thru F)		H * (G/60)

POLES, DUCTS, RIGHT OF WAY Transfer of Responsibility Fee (con't)

30827	**Direct Cost**					$92.15
30828						
30829		**Cost Calculation**			**Cost Factor**	**Cost**
30830						
30831		**B**	**C**		**D**	**E**
30832	***Marketing & Business Fees***					
30833	Product Management Expense	**D30833*E30827**			0.019957	$1.84
30834	Sales Expense	**D30834*E30827**			0.011877	$1.09
30835	Product Advertising Expense	**D30835*E30827**			0.000000	$0.00
30836	Business Fees (Other Operating Taxes)	**D30836*Sum(E30827:E30835]**			0.001483	$0.14
30837	***Total Marketing & Business Fees***	**Sum(E30827:E30836]**				$3.07
30838						
30839	***Sub-Total Direct Cost & Marketing***	**E30827+E30837**				$95.23
30840						
30841	***Other Direct Expenses***					
30842	Network Operations	**D30842*E30839**			0.034832	$3.32
30843	Network Support Assets	**D30843*E30839**			0.014703	$1.40
30844	General Support Assets	**D30844*E30839**			0.088742	$8.45
30845	General Purpose Computers	**D30845*E30839**			0.043342	$4.13
30846	Uncollectible	**D30846*E30839**			0.003786	$0.36
30847	Accounting & Finance Expense	**D30847*E30839**			0.007346	$0.70
30848	Human Resources Expense	**D30848*E30839**			0.008294	$0.79
30849	Information Management Expense	**D30849*E30839**			0.070887	$6.75
30850	Intangibles	**D30850*E30839**			0.000000	$0.00
30851	***Total Other Direct Expenses***	**Sum(E30842:E30850)**				$25.90
30852						
30853	***TELRIC***	**E30842+E30851**				$121.12
30854						
30855	***Common***					
30856	Executive Expense	**D30856*E30853**			0.011267	$1.36
30857	Planning Expense	**D30857*E30853**			0.000525	$0.06
30858	External Relations Expense	**D30858*E30853**			0.037846	$4.58
30859	Legal Expense	**D30859*E30853**			0.004717	$0.57
30860	Other Procurement Expense	**D30860*E30853**			0.001860	$0.23
30861	Research & Development Expense	**D30861*E30853**			0.000006	$0.00
30862	Other General and Admin Expense	**D30862*E30853**			0.015064	$1.82
30863	***Common Costs***	**Sum(E30856:E30862)**				$8.63
30864						
30865	***TELRIC + Common Costs***	**E30853+E30863**				$129.76

NONRECURRING COST DETAIL SUMMARY

Study Name: NONRECURRING ELEMENTS
Study Year: 2002
Analyst: Deffley/Eoriatti
Product Group: Interconnection

ENRC Version: 2.16
Date: 06/03/02

State: South Dakota

Work Item	Time Minutes	Prob #1	Prob #2	Prob #3	Prob #4	Applied Time (Minutes)	Labor /Hour	Cost
A	B	C	D	E	F	G	H	I
						B * (C Thru F)		H * (G/60)
BONAFIDE REQUEST PROCESS FEE								
ADD								
-INFRASTRUCTURE AVAILABILTY CENTER								
.5 PROBABILITY IS % TIME THIS ACTIVITY WILL OCCUR.								
Compose and dispurse related documents.	30	1.000				30.00	$56.97	$28.49
Input 30 day input plan	240	1.000				240.00	$56.97	$227.88
Provide AMC group with IP strategy and recommendatior	30	1.000				30.00	$56.97	$28.49
Subtotal - INFRASTRUCTURE AVAILABILTY CENTER						**300.00**		**$284.85**
-INTERCONNECTION PLANNING								
Review documentation, determine in request qualifies	60	1.000				60.00	$69.25	$69.25
Input 30 day input plan	240	1.000				240.00	$69.25	$277.00
Detailed research and analysis with all SMEs	240	1.000				240.00	$69.25	$277.00
Develop written strategy, Obtain approval	720	1.000				720.00	$69.25	$831.00
Subtotal - INTERCONNECTION PLANNING						**1,260.00**		**$1,454.25**
Total For Service:						**1,560.00**		**$1,739.10**

Study Name: NONRECURRING ELEMENTS
Study Year: 2002
Analyst: Deffley/Eoriatti
Product Group: Interconnection

State: South Dakota

	Work Item	Time Minutes	Prob #1	Prob #2	Prob #3	Prob #4	Applied Time (Minutes)	Labor /Hour	Cost
	A	B	C	D	E	F	G	H	I
							B * (C Thru F)		H * (G/60)

BONAFIDE REQUEST PROCESS FEE (con't)

		Cost Calculation		Cost Factor	Cost
		B	C	D	E
30917	**Direct Cost**				$1,739.10
30918					
30919					
30920					
30921					
30922	***Marketing & Business Fees***				
30923	Product Management Expense	D30923*E30917		0.019957	$34.71
30924	Sales Expense	D30924*E30917		0.011877	$20.66
30925	Product Advertising Expense	D30925*E30917		0.000000	$0.00
30926	Business Fees (Other Operating Taxes)	D30926*Sum(E30917:E30925)		0.001483	$2.66
30927	***Total Marketing & Business Fees***	Sum(E30917:E30926)			$58.02
30928					
30929	***Sub-Total Direct Cost & Marketing***	E30917+E30927			$1,797.12
30930					
30931	***Other Direct Expenses***				
30932	Network Operations	D30932*E30929		0.034832	$62.60
30933	Network Support Assets	D30933*E30929		0.014703	$26.42
30934	General Support Assets	D30934*E30929		0.088742	$159.48
30935	General Purpose Computers	D30935*E30929		0.043342	$77.89
30936	Uncollectible	D30936*E30929		0.003786	$6.80
30937	Accounting & Finance Expense	D30937*E30929		0.007346	$13.20
30938	Human Resources Expense	D30938*E30929		0.008294	$14.90
30939	Information Management Expense	D30939*E30929		0.070887	$127.39
30940	Intangibles	D30940*E30929		0.000000	$0.00
30941	***Total Other Direct Expenses***	Sum(E30932:E30940)			$488.70
30942					
30943	***TELRIC***	E30932+E30941			$2,285.82
30944					
30945	***Common***				
30946	Executive Expense	D30946*E30943		0.011267	$25.76
30947	Planning Expense	D30947*E30943		0.000525	$1.20
30948	External Relations Expense	D30948*E30943		0.037846	$86.51
30949	Legal Expense	D30949*E30943		0.004717	$10.78
30950	Other Procurement Expense	D30950*E30943		0.001860	$4.25
30951	Research & Development Expense	D30951*E30943		0.000006	$0.01
30952	Other General and Admin Expense	D30952*E30943		0.015064	$34.43
30953	***Common Costs***	Sum(E30946:E30952)			$162.95
30954					
30955	***TELRIC + Common Costs***	E30943+E30953			$2,448.77

Qwest

EXECUTIVE SUMMARY

SOUTH DAKOTA

DARK FIBER

RECURRING COST STUDY
#6457

USING PRESCRIBED LIVES AND COMMISSION
PRESCRIBED 10.14% COM

May 2002

Economic Analyses
MSEA
For Informed Decisions

MARKET SERVICES AND ECONOMIC ANALYSIS ORGANIZATION

DARK FIBER STUDY

Table of Contents

Page	Section 1 – Study Output
1	Executive Summary
5	Study Summary
7	WINPC3 Output
8	Total Products Costs
11	Investments Cost Calculations
	Section 2 – Cost Calculations
14	WINPC3 Investments
16	WINPC3 Parameters
17	WINPC3 ACF Inputs
19	WINPC3 ACF Outputs

MSEA

A. PURPOSE, SCOPE, AND APPLICATION

The purpose of this study is to estimate Qwest's - 2002 total element long-run incremental costs that would be incurred to provide Unbundled Network Elements to a Co-Provider.

This study develops deaveraged and state wide average Total Element Long Run Incremental Costs (TELRIC). Costs are specific to the state of South Dakota and are stated on a per unit basis, unless specified otherwise. **Cost results are based on Commission Prescribed 10.14% Cost of Money (COM).**

B. DESCRIPTION OF SERVICE

A Unbundled Network Element (UNE) is a portion of Qwest's network sold to an Interconnector or Certified Local Exchange Carrier (CLEC) for use in building services for their customers. The Interconnector normally would connect to these UNEs in a Qwest wire center. The Interconnector may combine these UNEs together and/or with their own facilities or equipment for this purpose.

The Interconnector has design responsibility to insure that these elements will properly work with each other and with their facilities and equipment to meet their customer's service needs.

Several types of UNEs are available from Qwest. The following UNEs are addressed in this study:

- Unbundled Dark Fiber - Loop (1 & 2-Fiber)
- Unbundled Dark Fiber - Extended Unbundled Dark Fiber (1 & 2-Fiber)
- Unbundled Dark Fiber – IOF (1 & 2-Fiber)

Unbundled Dark Fiber (UDF) Loop:
Provides a single strand or pair of optical fibers (i.e., two fibers) on which no electronic terminating equipment is provided by QWEST. The fibers go from wire center to splice, FDP, or customer location for Loop applications. A CLEC must be collocated in all wire centers where UDF terminates. The fibers will be connected to a Fiber Distribution Panel (FDP) or functional equivalent in the wire centers or customer locations. Technical Publication 77383 for additional information.

Extended Unbundled Dark Fiber (E-UDF) :
Provides a single strand or pair of optical fibers (i.e., two fibers) on which no electronic terminating equipment is provided by QWEST. The fibers go from wire center to splice, FDP, or customer location for Loop applications. A CLEC must be collocated in all wire centers where UDF terminates. The fibers will be connected to a Fiber Distribution Panel

(FDP) or functional equivalent in the wire centers or customer locations. Technical Publication 77383 for additional information.

Unbundled Dark Fiber (UDF) Interoffice:
Provides a single strand or pair of interoffice optical fibers (i.e., two fibers) on which no electronic terminating equipment is provided by QWEST. The fibers go from wire center to wire center for interoffice applications. A CLEC must be collocated in all wire centers where UDF terminates. The fibers will be connected to a Fiber Distribution Panel (FDP) or functional equivalent in the wire centers. See Technical Publication 77383 for additional information.

Unbundled Dark Fiber (UDF) & (E-UDF) & (IOF) Termination:
One or Two fiber termination equipment (FDP) located at the SWC or customer location.

Unbundled Dark Fiber (UDF) & (E-UDF) & (IOF) Cross Connect:
One or Two fiber patch cords to connect FDP to FDP located at the SWC or customer location.

C. STUDY METHODOLOGY

Unbundled Dark Fiber (UDF) Loop – Average fiber loop investments are taken from the LOOPMOD Model. Detailed description of LOOPMOD Model can be found in the Integrated Cost Model (ICM) LOOPMOD documentation. The Dark Fiber Model shows these investment results under the Loopmod Investments tab.

Extended Unbundled Dark Fiber (E-UDF) – Average fiber loop investments are taken from the LOOPMOD Model. Detailed description of LOOPMOD Model can be found in the Integrated Cost Model (ICM) LOOPMOD documentation. The Dark Fiber Model shows these investment results under the Loopmod Investments tab.

Unbundled Dark Fiber (UDF) & (E-UDF) Termination & Cross-Connect – The primary cost drivers are the investments for materials and corresponding installation and engineering labor costs. Total Install Factors (TIF) and utilization factors are applied to the pertinent material investments to calculate the total installed investments. The Dark Fiber Model calculates these investments under the FDP and Fiber Xconnect tabs.

The TELRIC Windows Personal Computer Cost Calculator (WINPC3) was used to convert installed investments to TELRIC by applying appropriate investment and expense factors to the installed investment.

D. Description OF TOTAL ELEMENT LONG RUN INCREMENTAL COSTS

Total Element Long Run Incremental Cost (TELRIC) studies are performed by Qwest to estimate the economic cost of providing network elements. The Qwest TELRIC studies identify the forward-looking costs associated with the provision of the total quantity of a network element in the long run. The *forward-looking* Qwest TELRIC studies identify the costs that are likely to be incurred in the future, and consider the latest forward-looking

technologies and methods of operation that are currently available. These studies are *not* embedded or historical, and do not measure the impact of prior investment decisions by the corporation. The Qwest TELRIC studies also identify the *long run* costs associated with providing a network element—reflecting a time period over which all inputs (including changes in the size of facilities, levels of investment, etc.) can be adjusted.

Qwest TELRIC studies identify recurring and nonrecurring costs. *Recurring costs* are the ongoing costs associated with providing a network element. Recurring costs are generally investment-related and include both capital costs and operating expenses. These costs are often presented as a cost per month or per unit of usage (e.g., minute of use) and are incurred throughout the time period the network element is provided to a customer. *Nonrecurring costs* are the one-time costs that are incurred at the time a customer establishes, disconnects or changes service. These costs normally result from a customer order, and are predominantly labor-related.

The Qwest recurring and nonrecurring TELRIC studies identify costs on a unitized basis and disaggregates the cost results into the following components:

Total Direct Costs are the forward-looking costs that are caused by offering the network element in the long run. These costs would not be incurred if the network elements were not offered. Total Direct Costs reflect the per-unit forward looking cost associated with providing the entire network element in the most efficient manner, holding constant the production of all other network elements produced by the firm. For recurring element costs Total Direct Costs include the capital costs (e.g., depreciation, return, taxes) and maintenance costs associated with the investment required to provision a network element, along with other network element-specific costs such as product management expense. For non-recurring costs, Total Direct Costs include the labor-related expenses associated with the provision of a network element, along with other network element-specific costs such as product management expense.

Directly Attributed Costs include network administration and engineering costs and various administrative costs such as the cost of general-purpose computers and accounting and finance expenses. These costs are not directly associated with a specific network element. However, these costs vary with the provision of all network elements, and are not common to the entire firm.

Total Element Long Run Incremental Costs (TELRIC) represent the sum of Total Direct Costs and Directly Attributed Costs. This measure of costs includes the forward-looking costs incurred in the provision of a network element. This measure of costs is consistent with TELRIC as defined by the FCC.

Common Costs are associated with the enterprise as a whole. These costs do vary based on the total size of the firm, but do not vary with the provisioning of individual network elements. These costs are avoidable only with the elimination of the entire firm, and are sometimes referred to as *general overhead costs.*

Fully Allocated Costs represent the sum of Total Element Long Run Incremental Cost plus Common Costs (TELRIC + CC).

E. STUDY ASSUMPTIONS

a. Costs are based on a least cost scorched node scenario and represent the cost of fully replacing the network required to provision the service, beginning from the existing grid of network nodes used by Qwest today.

b. It is assumed that facilities are placed given today's actual field conditions. This leads to a greater percent of facilities placement under difficult conditions than would occur with an assumption of "green field" (i.e., easy placement) conditions.

c. Additional assumptions used in the NAC models may be found in the documentation of that model.

d. Cost results are based on Commission Prescribed Lives and 10.14% Cost of Money (COM)

Results:

State: South Dakota

Description	Loaded Investment	Invst. Based & Mktg.	Network Support	Other Direct Expenses	TELRIC	Common	TELRIC + Common
UNBUNDLED DARK FIBER LOOP - 1 FIBER	$8,148.62	$116.24	$5.76	$31.61	$147.85	$10.54	$158.39
1 Loop Termination, per termination at wire center	$220.37	$3.54	$0.18	$0.96	$4.50	$0.32	$4.82
1 Fiber Loop Termination, per termination at premises	$159.98	$2.66	$0.13	$0.72	$3.39	$0.24	$3.63
UNBUNDLED DARK FIBER LOOP - 2 FIBER	$10,593.21	$151.12	$7.49	$41.09	$192.21	$13.70	$205.91
2 Fiber Loop Termination, per termination at wire center	$455.06	$7.30	$0.36	$1.99	$9.29	$0.66	$9.95
2 Fiber Loop Termination, per termination at premises	$330.35	$5.50	$0.27	$1.50	$6.99	$0.50	$7.49
Extended Unbundled Dark Fiber (E-UDF) - 1 Fiber	$8,148.62	$116.24	$5.76	$31.61	$147.85	$10.54	$158.39
1 Fiber Loop Termination, per termination at wire center	$220.37	$3.54	$0.18	$0.96	$4.50	$0.32	$4.82
1 Fiber Loop Termination, per termination at premises	$159.98	$2.66	$0.13	$0.72	$3.39	$0.24	$3.63
Extended Unbundled Dark Fiber (E-UDF) - 2 Fibers	$10,593.21	$151.12	$7.49	$41.09	$192.21	$13.70	$205.91
2 Fiber Loop Termination, per termination at wire center	$455.06	$7.30	$0.36	$1.99	$9.29	$0.66	$9.95
2 Fiber Loop Termination, per termination at premises	$330.35	$5.50	$0.27	$1.50	$6.99	$0.50	$7.49
INTEROFFICE DARK FIBER - PER ROUTE MILE - 1 FIBER	$2,922.18	$41.39	$2.05	$11.26	$52.65	$3.75	$56.40
1 Fiber Termination - InterOffice	$220.37	$3.54	$0.18	$0.96	$4.50	$0.32	$4.82
1 Fiber Cross Connection	$118.39	$1.90	$0.09	$0.52	$2.42	$0.17	$2.59
INTEROFFICE DARK FIBER - PER ROUTE MILE - 2 FIBER	$3,798.83	$53.81	$2.67	$14.63	$68.44	$4.88	$73.32
2 Fiber Termination - InterOffice	$466.28	$7.48	$0.37	$2.03	$9.51	$0.68	$10.19
2 Fiber Cross Connection	$236.77	$3.80	$0.19	$1.03	$4.83	$0.34	$5.18

Study Name	*DARK FIBER*	
Study Requester	*Gollehon*	
Type of Study	*TELRIC*	
Study ID	*6457*	
Cost Factor Group	*Interconnection*	
Study Applications	*Pricing*	
Completion Date	*May 21, 2002*	
Cost Analyst	*Williams*	
Study Review	**Reviewer**	**Date**
	Murphy	*May 21, 2002*
Models Used	**Model**	**Version**
	Wholesale Cost Program	*2.08*
	Cost Factor Databases	*02SD01E*
	Cost Factors Model (TELRIC)	*02V1*
	Dark Fiber	*Dark Fiber South Dakota*
	HiCap	*V2.1*
	Transport	*TMV5.0*
Cost Factors Used	**Factor**	**Effective Date**
	Capital Recovery	*04/02*
	Maintenance	*02/02*
	Ad Valorem	*02/02*
	COE Land & Bldg	*02/02*
	Marketing Factors	*04/02*
	Billing & Collection (PL)	*01/01*
	Other Direct Expenses	*04/02*
	Common	*04/02*
	Cost Of Money	*10.14%*
Inflation		
Major Cost Drivers		

Parameter File: K:\Recurring\DeVries-Williams\SD\Dark Fiber\DARK FIBER #6457\SD Dark Fiber #6457 Workpapers.xls, Sheet "WINPC3 Parameters"
State(s): SD
Database Vintage: 02SD01E
Factors For: Interconnection
Report Type: ICM Format
Decimal Places: 2
Costs Format: Monthly
Group Totals: Yes
ACF Input: K:\Recurring\DeVries-Williams\SD\Dark Fiber\DARK FIBER #6457\SD Dark Fiber #6457 Workpapers.xls, Sheet "WINPC3 ACF Inputs"
ACF Output: K:\Recurring\DeVries-Williams\SD\Dark Fiber\DARK FIBER #6457\SD Dark Fiber #6457 Workpapers.xls, Sheet "WINPC3 ACF Outputs"
Investment: K:\Recurring\DeVries-Williams\SD\Dark Fiber\DARK FIBER #6457\SD Dark Fiber #6457 Workpapers.xls, Sheet "WINPC3 Investments"
Output: K:\Recurring\DeVries-Williams\SD\Dark Fiber\DARK FIBER #6457\SD Dark Fiber #6457 Workpapers.xls, Sheet "WINPC3 Output"

State: South Dakota

Description	Loaded Investment	Invst. Based & Mktg.	Network Support	Other Direct Expenses	TELRIC	Common	TELRIC + Common
UNBUNDLED DARK FIBER LOOP - 1 FIBER	$8,148.62	$116.24	$5.76	$31.61	$147.85	$10.54	$158.39
1 Fiber Loop Termination, per termination at wire center	$220.37	$3.54	$0.18	$0.96	$4.50	$0.32	$4.82
1 Fiber Loop Termination, per termination at premises	$159.98	$2.66	$0.13	$0.72	$3.39	$0.24	$3.63
UNBUNDLED DARK FIBER LOOP - 2 FIBER	$10,593.21	$151.12	$7.49	$41.09	$192.21	$13.70	$205.91
2 Fiber Loop Termination, per termination at wire center	$455.06	$7.30	$0.36	$1.99	$9.29	$0.66	$9.95
2 Fiber Loop Termination, per termination at premises	$330.35	$5.50	$0.27	$1.50	$6.99	$0.50	$7.49
Extended Unbundled Dark Fiber (E-UDF) - 1 Fiber	$8,148.62	$116.24	$5.76	$31.61	$147.85	$10.54	$158.39
1 Fiber Loop Termination, per termination at wire center	$220.37	$3.54	$0.18	$0.96	$4.50	$0.32	$4.82
1 Fiber Loop Termination, per termination at premises	$159.98	$2.66	$0.13	$0.72	$3.39	$0.24	$3.63
Extended Unbundled Dark Fiber (E-UDF) - 2 Fibers	$10,593.21	$151.12	$7.49	$41.09	$192.21	$13.70	$205.91
2 Fiber Loop Termination, per termination at wire center	$455.06	$7.30	$0.36	$1.99	$9.29	$0.66	$9.95
2 Fiber Loop Termination, per termination at premises	$330.35	$5.50	$0.27	$1.50	$6.99	$0.50	$7.49
INTEROFFICE DARK FIBER - PER ROUTE MILE - 1 FIBER	$2,922.18	$41.39	$2.05	$11.26	$52.65	$3.75	$56.40
1 Fiber Termination - InterOffice	$220.37	$3.54	$0.18	$0.96	$4.50	$0.32	$4.82
1 Fiber Cross Connection	$118.39	$1.90	$0.09	$0.52	$2.42	$0.17	$2.59
INTEROFFICE DARK FIBER - PER ROUTE MILE - 2 FIBER	$3,798.83	$53.81	$2.67	$14.63	$68.44	$4.88	$73.32
2 Fiber Termination - InterOffice	$466.28	$7.48	$0.37	$2.03	$9.51	$0.68	$10.19
2 Fiber Cross Connection	$236.77	$3.80	$0.19	$1.03	$4.83	$0.34	$5.18

Row	5/21/0[illegible] .12 PM South Dakota	Source or Calculation	Factor Value	UNBUNDLED DARK FIBER LOOP - 1 FIBER	1 Fiber Loop Termination, per termination at wire center	1 Fiber Loop Termination, per termination at premises	UNBUNDLED DARK FIBER LOOP - 2 FIBER	2 Fiber Loop Termination, per termination at wire center	2 Fiber Loop Termination, per termination at premises
			A	B	C	D	E	F	G
1	**Investment**	sl r"Total" cD		8,148.62	220.37	159.98	10,593.21	455.06	330.35
2									
3	***Investment Based Costs***	***sl r"Total" cK***		112.01	3.41	2.57	145.61	7.03	5.30
4									
5	Direct Expenses			0.00	0.00	0.00	0.00	0.00	0.00
6	Miscellaneous Expenses			0.00	0.00	0.00	0.00	0.00	0.00
7	Billing & Collection - PL	cA*(r8-r6)	0.004304	0.48	0.01	0.01	0.63	0.03	0.02
8	***Total Investment Based + Billing & Collection***			112.49	3.42	2.58	146.24	7.06	5.32
9									
10	***Marketing & Business Fees***								
11	Product Management Expense	cA*(r8-r6)	0.019957	2.24	0.07	0.05	2.92	0.14	0.11
12	Sales Expense	cA*(r8-r6)	0.011877	1.34	0.04	0.03	1.74	0.08	0.06
13	Product Advertising Expense	cA*(r8-r6)	0.000000	0.00	0.00	0.00	0.00	0.00	0.00
14	Business Fees (Other Operating Taxes)	cA*(Sum(r8:r13)-r6)	0.001483	0.17	0.01	0.00	0.22	0.01	0.01
15	***Marketing & Business Fees Total***	***Sum r11:r14***		3.75	0.11	0.09	4.88	0.24	0.18
16									
17	***Sub-Total Invst., B & C, Mktg***	***r8 + r15***		116.24	3.54	2.66	151.12	7.30	5.50
18									
19	***Other Direct Expenses***								
20	Network Operations	cA*(r17-r6)	0.034832	4.05	0.12	0.09	5.26	0.25	0.19
21	Network Support Assets	cA*(r17-r6)	0.014703	1.71	0.05	0.04	2.22	0.11	0.08
22	General Support Assets	cA*(r17-r6)	0.088742	10.32	0.31	0.24	13.41	0.65	0.49
23	General Purpose Computers	cA*(r17-r6)	0.043342	5.04	0.15	0.12	6.55	0.32	0.24
24	Uncollectible	cA*(r17-r6)	0.003786	0.44	0.01	0.01	0.57	0.03	0.02
25	Accounting & Finance Expense	cA*(r17-r6)	0.007346	0.85	0.03	0.02	1.11	0.05	0.04
26	Human Resources Expense	cA*(r17-r6)	0.008294	0.96	0.03	0.02	1.25	0.06	0.05
27	Information Management Expense	cA*(r17-r6)	0.070887	8.24	0.25	0.19	10.71	0.52	0.39
28	Intangibles	cA*(r17-r6)	0.000000	0.00	0.00	0.00	0.00	0.00	0.00
29	***Total Other Direct Expenses***	***Sum r20:r28***		31.61	0.96	0.72	41.09	1.99	1.50
30									
31	***TELRIC***	***r17 + r29***		147.85	4.50	3.39	192.21	9.29	6.99
32									
33	***Common***								
34	Executive Expense	cA*(r31-r6)	0.011267	1.67	0.05	0.04	2.17	0.10	0.08
35	Planning Expense	cA*(r31-r6)	0.000525	0.08	0.00	0.00	0.10	0.00	0.00
36	External Relations Expense	cA*(r31-r6)	0.037846	5.60	0.17	0.13	7.27	0.35	0.26
37	Legal Expense	cA*(r31-r6)	0.004717	0.70	0.02	0.02	0.91	0.04	0.03
38	Other Procurement Expense	cA*(r31-r6)	0.001860	0.27	0.01	0.01	0.36	0.02	0.01
39	Research & Development Expense	cA*(r31-r6)	0.000006	0.00	0.00	0.00	0.00	0.00	0.00
40	Other General and Admin Expense	cA*(r31-r6)	0.015064	2.23	0.07	0.05	2.90	0.14	0.11
41	***Common Costs***	***Sum r34:r40***		10.54	0.32	0.24	13.70	0.66	0.50
42									
43	***TELRIC + Common Costs***	***r31 + r41***		158.39	4.82	3.63	205.91	9.95	7.49

5/21/0[illegible] .12 PM

Row	South Dakota	Source or Calculation	Factor Value	Extended Unbundled Dark Fiber (E-UDF) - 1 Fiber	1 Fiber Loop Termination, per termination at wire center	1 Fiber Loop Termination, per termination at premises	Extended Unbundled Dark Fiber (E-UDF) - 2 Fibers	2 Fiber Loop Termination, per termination at wire center	2 Fiber Loop Termination, per termination at premises
			A	H	I	J	K	L	M
1	**Investment**	sl r"Total" cD		8,148.62	220.37	159.98	10,593.21	455.06	330.35
2									
3	***Investment Based Costs***	***sl r"Total" cK***		112.01	3.41	2.57	145.61	7.03	5.30
4									
5	Direct Expenses			0.00	0.00	0.00	0.00	0.00	0.00
6	Miscellaneous Expenses			0.00	0.00	0.00	0.00	0.00	0.00
7	Billing & Collection - PL	cA*(r8-r6)	0.004304	0.48	0.01	0.01	0.63	0.03	0.02
8	***Total Investment Based + Billing & Collection***			112.49	3.42	2.58	146.24	7.06	5.32
9									
10	***Marketing & Business Fees***								
11	Product Management Expense	cA*(r8-r6)	0.019957	2.24	0.07	0.05	2.92	0.14	0.11
12	Sales Expense	cA*(r8-r6)	0.011877	1.34	0.04	0.03	1.74	0.08	0.06
13	Product Advertising Expense	cA*(r8-r6)	0.000000	0.00	0.00	0.00	0.00	0.00	0.00
14	Business Fees (Other Operating Taxes)	cA*(Sum(r8:r13)-r6)	0.001483	0.17	0.01	0.00	0.22	0.01	0.01
15	***Marketing & Business Fees Total***	***Sum r11:r14***		3.75	0.11	0.09	4.88	0.24	0.18
16									
17	***Sub-Total Invst., B & C, Mktg***	***r8 + r15***		116.24	3.54	2.66	151.12	7.30	5.50
18									
19	***Other Direct Expenses***								
20	Network Operations	cA*(r17-r6)	0.034832	4.05	0.12	0.09	5.26	0.25	0.19
21	Network Support Assets	cA*(r17-r6)	0.014703	1.71	0.05	0.04	2.22	0.11	0.08
22	General Support Assets	cA*(r17-r6)	0.088742	10.32	0.31	0.24	13.41	0.65	0.49
23	General Purpose Computers	cA*(r17-r6)	0.043342	5.04	0.15	0.12	6.55	0.32	0.24
24	Uncollectible	cA*(r17-r6)	0.003786	0.44	0.01	0.01	0.57	0.03	0.02
25	Accounting & Finance Expense	cA*(r17-r6)	0.007346	0.85	0.03	0.02	1.11	0.05	0.04
26	Human Resources Expense	cA*(r17-r6)	0.008294	0.96	0.03	0.02	1.25	0.06	0.05
27	Information Management Expense	cA*(r17-r6)	0.070887	8.24	0.25	0.19	10.71	0.52	0.39
28	Intangibles	cA*(r17-r6)	0.000000	0.00	0.00	0.00	0.00	0.00	0.00
29	***Total Other Direct Expenses***	***Sum r20:r28***		31.61	0.96	0.72	41.09	1.99	1.50
30									
31	***TELRIC***	***r17 + r29***		147.85	4.50	3.39	192.21	9.29	6.99
32									
33	***Common***								
34	Executive Expense	cA*(r31-r6)	0.011267	1.67	0.05	0.04	2.17	0.10	0.08
35	Planning Expense	cA*(r31-r6)	0.000525	0.08	0.00	0.00	0.10	0.00	0.00
36	External Relations Expense	cA*(r31-r6)	0.037846	5.60	0.17	0.13	7.27	0.35	0.26
37	Legal Expense	cA*(r31-r6)	0.004717	0.70	0.02	0.02	0.91	0.04	0.03
38	Other Procurement Expense	cA*(r31-r6)	0.001860	0.27	0.01	0.01	0.36	0.02	0.01
39	Research & Development Expense	cA*(r31-r6)	0.000006	0.00	0.00	0.00	0.00	0.00	0.00
40	Other General and Admin Expense	cA*(r31-r6)	0.015064	2.23	0.07	0.05	2.90	0.14	0.11
41	***Common Costs***	***Sum r34:r40***		10.54	0.32	0.24	13.70	0.66	0.50
42									
43	***TELRIC + Common Costs***	***r31 + r41***		158.39	4.82	3.63	205.91	9.95	7.49

Row	5/21/02 [illegible]:12 PM South Dakota	Source or Calculation	Factor Value	INTEROFFICE DARK FIBER - PER ROUTE MILE - 1 FIBER	1 Fiber Termination - InterOffice	1 Fiber Cross Connection	INTEROFFICE DARK FIBER - PER ROUTE MILE - 2 FIBER	2 Fiber Termination - InterOffice	2 Fiber Cross Connection
			A	N	O	P	Q	R	S
1	**Investment**	sl r"Total" cD		2,922.18	220.37	118.39	3,798.83	466.28	236.77
2									
3	***Investment Based Costs***	***sl r"Total" cK***		39.88	3.41	1.83	51.85	7.21	3.66
4									
5	Direct Expenses			0.00	0.00	0.00	0.00	0.00	0.00
6	Miscellaneous Expenses			0.00	0.00	0.00	0.00	0.00	0.00
7	Billing & Collection - PL	cA*(r8-r6)	0.004304	0.17	0.01	0.01	0.22	0.03	0.02
8	***Total Investment Based + Billing & Collection***			40.05	3.42	1.84	52.07	7.24	3.68
9									
10	***Marketing & Business Fees***								
11	Product Management Expense	cA*(r8-r6)	0.019957	0.80	0.07	0.04	1.04	0.14	0.07
12	Sales Expense	cA*(r8-r6)	0.011877	0.48	0.04	0.02	0.62	0.09	0.04
13	Product Advertising Expense	cA*(r8-r6)	0.000000	0.00	0.00	0.00	0.00	0.00	0.00
14	Business Fees (Other Operating Taxes)	cA*(Sum(r8:r13)-r6)	0.001483	0.06	0.01	0.00	0.08	0.01	0.01
15	***Marketing & Business Fees Total***	***Sum r11:r14***		1.34	0.11	0.06	1.74	0.24	0.12
16									
17	***Sub-Total Invst., B & C, Mktg***	***r8 + r15***		41.39	3.54	1.90	53.81	7.48	3.80
18									
19	***Other Direct Expenses***								
20	Network Operations	cA*(r17-r6)	0.034832	1.44	0.12	0.07	1.87	0.26	0.13
21	Network Support Assets	cA*(r17-r6)	0.014703	0.61	0.05	0.03	0.79	0.11	0.06
22	General Support Assets	cA*(r17-r6)	0.088742	3.67	0.31	0.17	4.77	0.66	0.34
23	General Purpose Computers	cA*(r17-r6)	0.043342	1.79	0.15	0.08	2.33	0.32	0.16
24	Uncollectible	cA*(r17-r6)	0.003786	0.16	0.01	0.01	0.20	0.03	0.01
25	Accounting & Finance Expense	cA*(r17-r6)	0.007346	0.30	0.03	0.01	0.40	0.05	0.03
26	Human Resources Expense	cA*(r17-r6)	0.008294	0.34	0.03	0.02	0.45	0.06	0.03
27	Information Management Expense	cA*(r17-r6)	0.070887	2.93	0.25	0.13	3.81	0.53	0.27
28	Intangibles	cA*(r17-r6)	0.000000	0.00	0.00	0.00	0.00	0.00	0.00
29	***Total Other Direct Expenses***	***Sum r20:r28***		11.26	0.96	0.52	14.63	2.03	1.03
30									
31	***TELRIC***	***r17 + r29***		52.65	4.50	2.42	68.44	9.51	4.83
32									
33	***Common***								
34	Executive Expense	cA*(r31-r6)	0.011267	0.59	0.05	0.03	0.77	0.11	0.05
35	Planning Expense	cA*(r31-r6)	0.000525	0.03	0.00	0.00	0.04	0.00	0.00
36	External Relations Expense	cA*(r31-r6)	0.037846	1.99	0.17	0.09	2.59	0.36	0.18
37	Legal Expense	cA*(r31-r6)	0.004717	0.25	0.02	0.01	0.32	0.04	0.02
38	Other Procurement Expense	cA*(r31-r6)	0.001860	0.10	0.01	0.00	0.13	0.02	0.01
39	Research & Development Expense	cA*(r31-r6)	0.000006	0.00	0.00	0.00	0.00	0.00	0.00
40	Other General and Admin Expense	cA*(r31-r6)	0.015064	0.79	0.07	0.04	1.03	0.14	0.07
41	***Common Costs***	***Sum r34:r40***		3.75	0.32	0.17	4.88	0.68	0.34
42									
43	***TELRIC + Common Costs***	***r31 + r41***		56.40	4.82	2.59	73.32	10.19	5.18

5/21/02
South Dakota

DARK FIBER

Acct	FRC	Account Name	Investment	Depreciation	Cost Of Money	Income Tax	Ad Valorem	Maintenance	Switch RTU	Total Capital Costs
UNBUNDLED DARK FIBER LOOP - 1 FIBER										
2441	4C	Conduit System	1,379.74	2.47	7.43	2.81	1.10	0.83	0.00	14.63
2422.12,.22	85C	Underground Cable - NonMetallic	636.07	3.75	3.00	1.13	0.51	1.00	0.00	9.39
2423.12,.22	845C	Buried Cable - NonMetallic	6,132.80	31.13	29.16	11.03	4.88	11.79	0.00	87.99
		Total	**8,148.62**	**37.34**	**39.59**	**14.97**	**6.48**	**13.63**	**0.00**	**112.01**
1 Fiber Loop Termination, per termination at wire center										
2232.2	257C	Circuit Equipment - Pair Gain - Digital	183.10	1.67	0.69	0.26	0.15	0.16	0.00	2.94
2111	20C	Land	0.68	0.00	0.01	0.00	0.00	0.00		0.01
2121	110C	Building	36.59	0.08	0.23	0.09	0.03	0.04		0.46
		Total	**220.37**	**1.75**	**0.93**	**0.35**	**0.18**	**0.20**	**0.00**	**3.41**
1 Fiber Loop Termination, per termination at premises										
2232.2	257CP	Pair Gain - Digital (Customer Premise)	159.98	1.46	0.61	0.23	0.13	0.14	0.00	2.57
		Total	**159.98**	**1.46**	**0.61**	**0.23**	**0.13**	**0.14**	**0.00**	**2.57**
UNBUNDLED DARK FIBER LOOP - 2 FIBER										
2441	4C	Conduit System	1,793.67	3.21	9.66	3.65	1.43	1.08	0.00	19.02
2422.12,.22	85C	Underground Cable - NonMetallic	826.90	4.87	3.90	1.47	0.66	1.30	0.00	12.21
2423.12,.22	845C	Buried Cable - NonMetallic	7,972.64	40.46	37.91	14.34	6.34	15.33	0.00	114.38
		Total	**10,593.21**	**48.54**	**51.46**	**19.46**	**8.43**	**17.72**	**0.00**	**145.61**
2 Fiber Loop Termination, per termination at wire center										
2232.2	257C	Circuit Equipment - Pair Gain - Digital	378.10	3.46	1.43	0.54	0.30	0.33	0.00	6.06
2111	20C	Land	1.41	0.00	0.01	0.00	0.00	0.00		0.02
2121	110C	Building	75.56	0.16	0.47	0.18	0.06	0.08		0.95
		Total	**455.06**	**3.62**	**1.91**	**0.72**	**0.36**	**0.41**	**0.00**	**7.03**
2 Fiber Loop Termination, per termination at premises										
2232.2	257CP	Pair Gain - Digital (Customer Premise)	330.35	3.02	1.25	0.47	0.26	0.29	0.00	5.30
		Total	**330.35**	**3.02**	**1.25**	**0.47**	**0.26**	**0.29**	**0.00**	**5.30**
Extended Unbundled Dark Fiber (E-UDF) - 1 Fiber										
2441	4C	Conduit System	1,379.74	2.47	7.43	2.81	1.10	0.83	0.00	14.63
2422.12,.22	85C	Underground Cable - NonMetallic	636.07	3.75	3.00	1.13	0.51	1.00	0.00	9.39

5/21/02
South Dakota

DARK FIBER

Acct	FRC	Account Name	Investment	Depreciation	Cost Of Money	Income Tax	Ad Valorem	Maintenance	Switch RTU	Total Capital Costs
2423.12,.22	845C	Buried Cable - NonMetallic	6,132.80	31.13	29.16	11.03	4.88	11.79	0.00	87.99
		Total	**8,148.62**	**37.34**	**39.59**	**14.97**	**6.48**	**13.63**	**0.00**	**112.01**

1 Fiber Loop Termination, per termination at wire center

2232.2	257C	Circuit Equipment - Pair Gain - Digital	183.10	1.67	0.69	0.26	0.15	0.16	0.00	2.94
2111	20C	Land	0.68	0.00	0.01	0.00	0.00	0.00		0.01
2121	110C	Building	36.59	0.08	0.23	0.09	0.03	0.04		0.46
		Total	**220.37**	**1.75**	**0.93**	**0.35**	**0.18**	**0.20**	**0.00**	**3.41**

1 Fiber Loop Termination, per termination at premises

2232.2	257CP	Pair Gain - Digital (Customer Premise)	159.98	1.46	0.61	0.23	0.13	0.14	0.00	2.57
		Total	**159.98**	**1.46**	**0.61**	**0.23**	**0.13**	**0.14**	**0.00**	**2.57**

Extended Unbundled Dark Fiber (E-UDF) - 2 Fibers

2441	4C	Conduit System	1,793.67	3.21	9.66	3.65	1.43	1.08	0.00	19.02
2422.12,.22	85C	Underground Cable - NonMetallic	826.90	4.87	3.90	1.47	0.66	1.30	0.00	12.21
2423.12,.22	845C	Buried Cable - NonMetallic	7,972.64	40.46	37.91	14.34	6.34	15.33	0.00	114.38
		Total	**10,593.21**	**48.54**	**51.46**	**19.46**	**8.43**	**17.72**	**0.00**	**145.61**

2 Fiber Loop Termination, per termination at wire center

2232.2	257C	Circuit Equipment - Pair Gain - Digital	378.10	3.46	1.43	0.54	0.30	0.33	0.00	6.06
2111	20C	Land	1.41	0.00	0.01	0.00	0.00	0.00		0.02
2121	110C	Building	75.56	0.16	0.47	0.18	0.06	0.08		0.95
		Total	**455.06**	**3.62**	**1.91**	**0.72**	**0.36**	**0.41**	**0.00**	**7.03**

2 Fiber Loop Termination, per termination at premises

2232.2	257CP	Pair Gain - Digital (Customer Premise)	330.35	3.02	1.25	0.47	0.26	0.29	0.00	5.30
		Total	**330.35**	**3.02**	**1.25**	**0.47**	**0.26**	**0.29**	**0.00**	**5.30**

INTEROFFICE DARK FIBER - PER ROUTE MILE - 1 FIBER

2441	4C	Conduit System	572.87	1.02	3.08	1.17	0.46	0.35	0.00	6.08
2422.12,.22	85C	Underground Cable - NonMetallic	246.13	1.45	1.16	0.44	0.20	0.39	0.00	3.63
2423.12,.22	845C	Buried Cable - NonMetallic	2,103.18	10.67	10.00	3.78	1.67	4.04	0.00	30.17
		Total	**2,922.18**	**13.15**	**14.24**	**5.39**	**2.32**	**4.78**	**0.00**	**39.88**

1 Fiber Termination - InterOffice

5/21/02
South Dakota

DARK FIBER

Acct	FRC	Account Name	Investment	Depreciation	Cost Of Money	Income Tax	Ad Valorem	Maintenance	Switch RTU	Total Capital Costs
2232.2	257C	Circuit Equipment - Pair Gain - Digital	183.10	1.67	0.69	0.26	0.15	0.16	0.00	2.94
2111	20C	Land	0.68	0.00	0.01	0.00	0.00	0.00		0.01
2121	110C	Building	36.59	0.08	0.23	0.09	0.03	0.04		0.46
		Total	**220.37**	**1.75**	**0.93**	**0.35**	**0.18**	**0.20**	**0.00**	**3.41**

1 Fiber Cross Connection

2232.2	257C	Circuit Equipment - Pair Gain - Digital	98.36	0.90	0.37	0.14	0.08	0.09	0.00	1.58
2111	20C	Land	0.37	0.00	0.00	0.00	0.00	0.00		0.00
2121	110C	Building	19.66	0.04	0.12	0.05	0.02	0.02		0.25
		Total	**118.39**	**0.94**	**0.50**	**0.19**	**0.09**	**0.11**	**0.00**	**1.83**

INTEROFFICE DARK FIBER - PER ROUTE MILE - 2 FIBER

2441	4C	Conduit System	744.73	1.33	4.01	1.52	0.59	0.45	0.00	7.90
2422.12,.22	85C	Underground Cable - NonMetallic	319.98	1.89	1.51	0.57	0.25	0.50	0.00	4.72
2423.12,.22	845C	Buried Cable - NonMetallic	2,734.13	13.88	13.00	4.92	2.18	5.26	0.00	39.23
		Total	**3,798.83**	**17.09**	**18.52**	**7.00**	**3.02**	**6.21**	**0.00**	**51.85**

2 Fiber Termination - InterOffice

2232.2	257C	Circuit Equipment - Pair Gain - Digital	387.42	3.54	1.47	0.55	0.31	0.34	0.00	6.21
2111	20C	Land	1.45	0.00	0.01	0.00	0.00	0.00		0.02
2121	110C	Building	77.42	0.17	0.48	0.18	0.06	0.08		0.98
		Total	**466.28**	**3.71**	**1.96**	**0.74**	**0.37**	**0.42**	**0.00**	**7.21**

2 Fiber Cross Connection

2232.2	257C	Circuit Equipment - Pair Gain - Digital	196.73	1.80	0.75	0.28	0.16	0.17	0.00	3.15
2111	20C	Land	0.73	0.00	0.01	0.00	0.00	0.00		0.01
2121	110C	Building	39.31	0.08	0.25	0.09	0.03	0.04		0.50
		Total	**236.77**	**1.88**	**1.00**	**0.38**	**0.19**	**0.22**	**0.00**	**3.66**

	A	B	C	D	E	F	G	H	I
1	Investment								
2	STUDY	DARK FIBER							
3	DATE	5/21/02							
4	GROUP	UNBUNDLED DARK FIBER LOOP - 1 FIBER						Dark Fiber South Dakota	Loop Mod Investments Tab
5	LOADED	SD	1,379.7430971788		0.	4C	Conduit		
6	LOADED	SD	636.0738129301		0.	85C	Underground Fiber		
7	LOADED	SD	6,132.8035981537		0.	845C	Buried Fiber		
8	GROUP	1 Fiber Loop Termination, per termination at wire center						Dark Fiber South Dakota	SWC FDP Tab
9	LOADED	SD	183.1011483013		0.	257C	FDP		
10	GROUP	1 Fiber Loop Termination, per termination at premises						Dark Fiber South Dakota	PREMISES FDP Tab
11	LOADED	SD	159.9784984615		0.	257CP	FDP		
12	GROUP	UNBUNDLED DARK FIBER LOOP - 2 FIBER						Dark Fiber South Dakota	Loop Mod Investments Tab
13	LOADED	SD	1,793.6660263325		0.	4C	Conduit		
14	LOADED	SD	826.8959568091		0.	85C	Underground Fiber		
15	LOADED	SD	7,972.6446775998		0.	845C	Buried Fiber		
16	GROUP	2 Fiber Loop Termination, per termination at wire center						Dark Fiber South Dakota	SWC FDP Tab
17	LOADED	SD	378.0951922522		0.	257C	FDP		
18	GROUP	2 Fiber Loop Termination, per termination at premises						Dark Fiber South Dakota	PREMISES FDP Tab
19	LOADED	SD	330.3480163462		0.	257CP	FDP		
20	GROUP	Extended Unbundled Dark Fiber (E-UDF) - 1 Fiber						Dark Fiber South Dakota	Loop Mod Investments Tab
21	LOADED	SD	1,379.7430971788		0.	4C	Conduit		
22	LOADED	SD	636.0738129301		0.	85C	Underground Fiber		
23	LOADED	SD	6,132.8035981537		0.	845C	Buried Fiber		
24	GROUP	1 Fiber Loop Termination, per termination at wire center						Dark Fiber South Dakota	SWC FDP Tab
25	LOADED	SD	183.1011483013		0.	257C	FDP		
26	GROUP	1 Fiber Loop Termination, per termination at premises						Dark Fiber South Dakota	PREMISES FDP Tab
27	LOADED	SD	159.9784984615		0.	257CP	FDP		
28	GROUP	Extended Unbundled Dark Fiber (E-UDF) - 2 Fibers						Dark Fiber South Dakota	Loop Mod Investments Tab
29	LOADED	SD	1,793.6660263325		0.	4C	Conduit		
30	LOADED	SD	826.8959568091		0.	85C	Underground Fiber		
31	LOADED	SD	7,972.6446775998		0.	845C	Buried Fiber		
32	GROUP	2 Fiber Loop Termination, per termination at wire center						Dark Fiber South Dakota	SWC FDP Tab
33	LOADED	SD	378.0951922522		0.	257C	FDP		
34	GROUP	2 Fiber Loop Termination, per termination at premises						Dark Fiber South Dakota	PREMISES FDP Tab
35	LOADED	SD	330.3480163462		0.	257CP	FDP		
36	GROUP	INTEROFFICE DARK FIBER - PER ROUTE MILE - 1 FIBER						Dark Fiber South Dakota	IOF Fiber Tab
37	LOADED	SD	572.8671461215		0.	4C	Conduit		
38	LOADED	SD	246.1347927057		0.	85C	Underground Fiber		

	A	B	C	D	E	F	G	H	I
39	LOADED	SD	2,103.1757433699		0.	845C	Buried Fiber		
40	GROUP	1 Fiber Termination - InterOffice						Dark Fiber South Dakota	CO FDP Tab
41	LOADED	SD	183.1011483013		0.	257C	FDP		
42	GROUP	1 Fiber Cross Connection						Dark Fiber South Dakota	FIBER_Xconnect
43	LOADED	SD	98.3632		0.	257C	Fiber Patch Cord		Tab
44	GROUP	INTEROFFICE DARK FIBER - PER ROUTE MILE - 2 FIBER						Dark Fiber South Dakota	
45	LOADED	SD	744.7272899579		0.	4C	Conduit		
46	LOADED	SD	319.9752305174		0.	85C	Underground Fiber		
47	LOADED	SD	2,734.1284663809		0.	845C	Buried Fiber		
48	GROUP	2 Fiber Termination - InterOffice						Dark Fiber South Dakota	CO FDP Tab
49	LOADED	SD	387.417443525		0.	257C	FDP		
50	GROUP	2 Fiber Cross Connection						Dark Fiber South Dakota	FIBER_Xconnect
51	LOADED	SD	196.7264		0.	257C	Fiber Patch Cord		Tab

	A	B
1	Parameter	
2	SD	
3	7	
4	2	
5	Monthly	12
6	Yes	
7	No	
8		
9	11	
10	6434	

	A	B	C	D	E	F	G	H	I	J	K	L	M	N
1	ACFIN													
2	02SD01E													
3	357C	DEPR-AVG	COM-AVG	IT-AVG	MTNC-TOT	ADVAL	BLDG	LAND	PRODMAN	SALESEXP	ADVER	BF	NTWKOP	NTWKST
4	257C	DEPR-AVG	COM-AVG	IT-AVG	MTNC-TOT	ADVAL	BLDG	LAND	PRODMAN	SALESEXP	ADVER	BF	NTWKOP	NTWKST
5	257CP	DEPR-AVG	COM-AVG	IT-AVG	MTNC-TOT	ADVAL	BLDG	LAND	PRODMAN	SALESEXP	ADVER	BF	NTWKOP	NTWKST
6	257CS	DEPR-AVG	COM-AVG	IT-AVG	MTNC-TOT	ADVAL	BLDG	LAND	PRODMAN	SALESEXP	ADVER	BF	NTWKOP	NTWKST
7	257CSP	DEPR-AVG	COM-AVG	IT-AVG	MTNC-TOT	ADVAL	BLDG	LAND	PRODMAN	SALESEXP	ADVER	BF	NTWKOP	NTWKST
8	20C	DEPR-AVG	COM-AVG	IT-AVG	MTNC-TOT	ADVAL	BLDG	LAND	PRODMAN	SALESEXP	ADVER	BF	NTWKOP	NTWKST
9	110C	DEPR-AVG	COM-AVG	IT-AVG	MTNC-TOT	ADVAL	BLDG	LAND	PRODMAN	SALESEXP	ADVER	BF	NTWKOP	NTWKST
10	1C	DEPR-AVG	COM-AVG	IT-AVG	MTNC-TOT	ADVAL	BLDG	LAND	PRODMAN	SALESEXP	ADVER	BF	NTWKOP	NTWKST
11	3C	DEPR-AVG	COM-AVG	IT-AVG	MTNC-TOT	ADVAL	BLDG	LAND	PRODMAN	SALESEXP	ADVER	BF	NTWKOP	NTWKST
12	4C	DEPR-AVG	COM-AVG	IT-AVG	MTNC-TOT	ADVAL	BLDG	LAND	PRODMAN	SALESEXP	ADVER	BF	NTWKOP	NTWKST
13	5C	DEPR-AVG	COM-AVG	IT-AVG	MTNC-TOT	ADVAL	BLDG	LAND	PRODMAN	SALESEXP	ADVER	BF	NTWKOP	NTWKST
14	35C	DEPR-AVG	COM-AVG	IT-AVG	MTNC-TOT	ADVAL	BLDG	LAND	PRODMAN	SALESEXP	ADVER	BF	NTWKOP	NTWKST
15	42C	DEPR-AVG	COM-AVG	IT-AVG	MTNC-TOT	ADVAL	BLDG	LAND	PRODMAN	SALESEXP	ADVER	BF	NTWKOP	NTWKST
16	45C	DEPR-AVG	COM-AVG	IT-AVG	MTNC-TOT	ADVAL	BLDG	LAND	PRODMAN	SALESEXP	ADVER	BF	NTWKOP	NTWKST
17	52C	DEPR-AVG	COM-AVG	IT-AVG	MTNC-TOT	ADVAL	BLDG	LAND	PRODMAN	SALESEXP	ADVER	BF	NTWKOP	NTWKST
18	62C	DEPR-AVG	COM-AVG	IT-AVG	MTNC-TOT	ADVAL	BLDG	LAND	PRODMAN	SALESEXP	ADVER	BF	NTWKOP	NTWKST
19	85C	DEPR-AVG	COM-AVG	IT-AVG	MTNC-TOT	ADVAL	BLDG	LAND	PRODMAN	SALESEXP	ADVER	BF	NTWKOP	NTWKST
20	845C	DEPR-AVG	COM-AVG	IT-AVG	MTNC-TOT	ADVAL	BLDG	LAND	PRODMAN	SALESEXP	ADVER	BF	NTWKOP	NTWKST
21	862C	DEPR-AVG	COM-AVG	IT-AVG	MTNC-TOT	ADVAL	BLDG	LAND	PRODMAN	SALESEXP	ADVER	BF	NTWKOP	NTWKST
22	357CS	DEPR-AVG	COM-AVG	IT-AVG	MTNC-TOT	ADVAL	BLDG	LAND	PRODMAN	SALESEXP	ADVER	BF	NTWKOP	NTWKST

	O	P	Q	R	S	T	U	V	W	X	Y	Z	AA	AB	AC
1															
2															
3	GENLST	COMPTR	UNCOLL	ACCNT	HREXP	INTAN	EXEC	PLAN	EXTERN	INFOR	LEGAL	PROCR	RDEXP	GENL	BC
4	GENLST	COMPTR	UNCOLL	ACCNT	HREXP	INTAN	EXEC	PLAN	EXTERN	INFOR	LEGAL	PROCR	RDEXP	GENL	BC
5	GENLST	COMPTR	UNCOLL	ACCNT	HREXP	INTAN	EXEC	PLAN	EXTERN	INFOR	LEGAL	PROCR	RDEXP	GENL	BC
6	GENLST	COMPTR	UNCOLL	ACCNT	HREXP	INTAN	EXEC	PLAN	EXTERN	INFOR	LEGAL	PROCR	RDEXP	GENL	BC
7	GENLST	COMPTR	UNCOLL	ACCNT	HREXP	INTAN	EXEC	PLAN	EXTERN	INFOR	LEGAL	PROCR	RDEXP	GENL	BC
8	GENLST	COMPTR	UNCOLL	ACCNT	HREXP	INTAN	EXEC	PLAN	EXTERN	INFOR	LEGAL	PROCR	RDEXP	GENL	BC
9	GENLST	COMPTR	UNCOLL	ACCNT	HREXP	INTAN	EXEC	PLAN	EXTERN	INFOR	LEGAL	PROCR	RDEXP	GENL	BC
10	GENLST	COMPTR	UNCOLL	ACCNT	HREXP	INTAN	EXEC	PLAN	EXTERN	INFOR	LEGAL	PROCR	RDEXP	GENL	BC
11	GENLST	COMPTR	UNCOLL	ACCNT	HREXP	INTAN	EXEC	PLAN	EXTERN	INFOR	LEGAL	PROCR	RDEXP	GENL	BC
12	GENLST	COMPTR	UNCOLL	ACCNT	HREXP	INTAN	EXEC	PLAN	EXTERN	INFOR	LEGAL	PROCR	RDEXP	GENL	BC
13	GENLST	COMPTR	UNCOLL	ACCNT	HREXP	INTAN	EXEC	PLAN	EXTERN	INFOR	LEGAL	PROCR	RDEXP	GENL	BC
14	GENLST	COMPTR	UNCOLL	ACCNT	HREXP	INTAN	EXEC	PLAN	EXTERN	INFOR	LEGAL	PROCR	RDEXP	GENL	BC
15	GENLST	COMPTR	UNCOLL	ACCNT	HREXP	INTAN	EXEC	PLAN	EXTERN	INFOR	LEGAL	PROCR	RDEXP	GENL	BC
16	GENLST	COMPTR	UNCOLL	ACCNT	HREXP	INTAN	EXEC	PLAN	EXTERN	INFOR	LEGAL	PROCR	RDEXP	GENL	BC
17	GENLST	COMPTR	UNCOLL	ACCNT	HREXP	INTAN	EXEC	PLAN	EXTERN	INFOR	LEGAL	PROCR	RDEXP	GENL	BC
18	GENLST	COMPTR	UNCOLL	ACCNT	HREXP	INTAN	EXEC	PLAN	EXTERN	INFOR	LEGAL	PROCR	RDEXP	GENL	BC
19	GENLST	COMPTR	UNCOLL	ACCNT	HREXP	INTAN	EXEC	PLAN	EXTERN	INFOR	LEGAL	PROCR	RDEXP	GENL	BC
20	GENLST	COMPTR	UNCOLL	ACCNT	HREXP	INTAN	EXEC	PLAN	EXTERN	INFOR	LEGAL	PROCR	RDEXP	GENL	BC
21	GENLST	COMPTR	UNCOLL	ACCNT	HREXP	INTAN	EXEC	PLAN	EXTERN	INFOR	LEGAL	PROCR	RDEXP	GENL	BC
22	GENLST	COMPTR	UNCOLL	ACCNT	HREXP	INTAN	EXEC	PLAN	EXTERN	INFOR	LEGAL	PROCR	RDEXP	GENL	BC

	A	B	C	D	E	F	G	H	I	J	K	L	M
1	ACFOUT	Factors For: Interconnection											
2	*-Run Done With Database Vintage: 02SD01E, Dated: 04/08/02*												
3	*-Wholesale Cost Program (TELRIC) Data Base released 04/02 (02SD01E).*												
4	*-Factors loaded from Factors Model (Expense Module), Version 02V1.*												
5	*-CAPITAL RECOVERY factors released 04/02 and based on 10.14% Cost*												
6	*Of Money. No 1-10 year factors developed.*												
7	*-MAINTENANCE factors released 02/02.*												
8	*-RTU factors released 02/01.*												
9	*-AD VALOREM Tax released 02/02.*												
10	*-DIRECTLY ASSIGNED expense factors released 04/02.*												
11	*-BUSINESS FEES released 04/02.*												
12	*-COMMON Expense released 04/02.*												
13	*-TOTAL INSTALLED FACTORS (TIF) released 01/01.*												
14	*-POWER investment factors released 01/01.*												
15	*-SALES TAX released 01/01.*												
16	*-TELCO Engineering factors released 01/01.*												
17	*-INTEREST DURING CONSTRUCTION released 01/01.*												
18	*-LAND AND BUILDING factors released 02/02.*												
19	*-DIRECTLY ATTRIBUTABLE expense factors released 04/02.*												
20	*-SALES EXPENSE factor released 04/02.*												
21	*-PRODUCT MANAGEMENT factor released 04/02.*												
22	*-BILLING & COLLECTION factor released 01/01.*												
23	*-PROVISIONING factors released 01/01.*												
24	*-TELEPHONE PLANT INDEX released 01/01.*												
25	*-STRUCTURE RATIO released 01/01.*												
26													
27													
28													
29													
30													
31													
32													
33													

	A	B	C	D	E	F	G	H	I	J	K	L	M	N	O
34															
35	***State:***														
36															
37															
38	State:	South Dakota													
39															
40	**ACCOUNTS**	**DEPR-AVG**	**COM-AVG**	**IT-AVG**	**MTNC-TOT**	**ADVAL**	**BLDG**	**LAND**	**PRODMAN**	**SALESEXP**	**ADVER**	**BF**	**NTWKOP**	**NTWKST**	**GENLST**
41	357C	0.109717	0.045455	0.017189	0.025490	0.009546	0.199833	0.003732	0.019957	0.011877	0.000000	0.001483	0.034832	0.014703	0.088742
42	257C	0.109717	0.045455	0.017189	0.010529	0.009546	0.199833	0.003732	0.019957	0.011877	0.000000	0.001483	0.034832	0.014703	0.088742
43	257CP	0.109717	0.045455	0.017189	0.010529	0.009546	0.000000	0.000000	0.019957	0.011877	0.000000	0.001483	0.034832	0.014703	0.088742
44	257CS	0.109717	0.045455	0.017189	0.010529	0.009546	0.199833	0.003732	0.019957	0.011877	0.000000	0.001483	0.034832	0.014703	0.088742
45	257CSP	0.109717	0.045455	0.017189	0.010529	0.009546	0.000000	0.000000	0.019957	0.011877	0.000000	0.001483	0.034832	0.014703	0.088742
46	20C	0.000000	0.096506	0.036495	0.012770	0.009546	0.000000	0.000000	0.019957	0.011877	0.000000	0.001483	0.034832	0.014703	0.088742
47	110C	0.025821	0.074869	0.028313	0.012770	0.009546	0.000000	0.000000	0.019957	0.011877	0.000000	0.001483	0.034832	0.014703	0.088742
48	1C	0.122572	0.036893	0.013952	0.002946	0.009546	0.000000	0.000000	0.019957	0.011877	0.000000	0.001483	0.034832	0.014703	0.088742
49	3C	0.274000	0.091689	0.034674	0.024483	0.009546	0.000000	0.000000	0.019957	0.011877	0.000000	0.001483	0.034832	0.014703	0.088742
50	4C	0.021443	0.064600	0.024429	0.007242	0.009546	0.000000	0.000000	0.019957	0.011877	0.000000	0.001483	0.034832	0.014703	0.088742
51	5C	0.090987	0.056203	0.021254	0.030615	0.009546	0.000000	0.000000	0.019957	0.011877	0.000000	0.001483	0.034832	0.014703	0.088742
52	35C	0.060902	0.057059	0.021578	0.052623	0.009546	0.000000	0.000000	0.019957	0.011877	0.000000	0.001483	0.034832	0.014703	0.088742
53	42C	0.105201	0.054376	0.020563	0.111075	0.009546	0.000000	0.000000	0.019957	0.011877	0.000000	0.001483	0.034832	0.014703	0.088742
54	45C	0.060902	0.057059	0.021578	0.052623	0.009546	0.000000	0.000000	0.019957	0.011877	0.000000	0.001483	0.034832	0.014703	0.088742
55	52C	0.105201	0.054376	0.020563	0.111075	0.009546	0.000000	0.000000	0.019957	0.011877	0.000000	0.001483	0.034832	0.014703	0.088742
56	62C	0.062692	0.058372	0.022074	0.035119	0.009546	0.000000	0.000000	0.019957	0.011877	0.000000	0.001483	0.034832	0.014703	0.088742
57	85C	0.070742	0.056557	0.021388	0.018901	0.009546	0.000000	0.000000	0.019957	0.011877	0.000000	0.001483	0.034832	0.014703	0.088742
58	845C	0.060902	0.057059	0.021578	0.023075	0.009546	0.000000	0.000000	0.019957	0.011877	0.000000	0.001483	0.034832	0.014703	0.088742
59	862C	0.062692	0.058372	0.022074	0.017856	0.009546	0.000000	0.000000	0.019957	0.011877	0.000000	0.001483	0.034832	0.014703	0.088742
60	357CS	0.109717	0.045455	0.017189	0.025490	0.009546	0.199833	0.003732	0.019957	0.011877	0.000000	0.001483	0.034832	0.014703	0.088742

	P	Q	R	S	T	U	V	W	X	Y	Z	AA	AB	AC
34														
35														
36														
37														
38														
39														
40	**COMPTR**	**UNCOLL**	**ACCNT**	**HREXP**	**INTAN**	**EXEC**	**PLAN**	**EXTERN**	**INFOR**	**LEGAL**	**PROCR**	**RDEXP**	**GENL**	**BC**
41	0.043342	0.003786	0.007346	0.008294	0.000000	0.011267	0.000525	0.037846	0.070887	0.004717	0.001860	0.000006	0.015064	0.004304
42	0.043342	0.003786	0.007346	0.008294	0.000000	0.011267	0.000525	0.037846	0.070887	0.004717	0.001860	0.000006	0.015064	0.004304
43	0.043342	0.003786	0.007346	0.008294	0.000000	0.011267	0.000525	0.037846	0.070887	0.004717	0.001860	0.000006	0.015064	0.004304
44	0.043342	0.003786	0.007346	0.008294	0.000000	0.011267	0.000525	0.037846	0.070887	0.004717	0.001860	0.000006	0.015064	0.004304
45	0.043342	0.003786	0.007346	0.008294	0.000000	0.011267	0.000525	0.037846	0.070887	0.004717	0.001860	0.000006	0.015064	0.004304
46	0.043342	0.003786	0.007346	0.008294	0.000000	0.011267	0.000525	0.037846	0.070887	0.004717	0.001860	0.000006	0.015064	0.004304
47	0.043342	0.003786	0.007346	0.008294	0.000000	0.011267	0.000525	0.037846	0.070887	0.004717	0.001860	0.000006	0.015064	0.004304
48	0.043342	0.003786	0.007346	0.008294	0.000000	0.011267	0.000525	0.037846	0.070887	0.004717	0.001860	0.000006	0.015064	0.004304
49	0.043342	0.003786	0.007346	0.008294	0.000000	0.011267	0.000525	0.037846	0.070887	0.004717	0.001860	0.000006	0.015064	0.004304
50	0.043342	0.003786	0.007346	0.008294	0.000000	0.011267	0.000525	0.037846	0.070887	0.004717	0.001860	0.000006	0.015064	0.004304
51	0.043342	0.003786	0.007346	0.008294	0.000000	0.011267	0.000525	0.037846	0.070887	0.004717	0.001860	0.000006	0.015064	0.004304
52	0.043342	0.003786	0.007346	0.008294	0.000000	0.011267	0.000525	0.037846	0.070887	0.004717	0.001860	0.000006	0.015064	0.004304
53	0.043342	0.003786	0.007346	0.008294	0.000000	0.011267	0.000525	0.037846	0.070887	0.004717	0.001860	0.000006	0.015064	0.004304
54	0.043342	0.003786	0.007346	0.008294	0.000000	0.011267	0.000525	0.037846	0.070887	0.004717	0.001860	0.000006	0.015064	0.004304
55	0.043342	0.003786	0.007346	0.008294	0.000000	0.011267	0.000525	0.037846	0.070887	0.004717	0.001860	0.000006	0.015064	0.004304
56	0.043342	0.003786	0.007346	0.008294	0.000000	0.011267	0.000525	0.037846	0.070887	0.004717	0.001860	0.000006	0.015064	0.004304
57	0.043342	0.003786	0.007346	0.008294	0.000000	0.011267	0.000525	0.037846	0.070887	0.004717	0.001860	0.000006	0.015064	0.004304
58	0.043342	0.003786	0.007346	0.008294	0.000000	0.011267	0.000525	0.037846	0.070887	0.004717	0.001860	0.000006	0.015064	0.004304
59	0.043342	0.003786	0.007346	0.008294	0.000000	0.011267	0.000525	0.037846	0.070887	0.004717	0.001860	0.000006	0.015064	0.004304
60	0.043342	0.003786	0.007346	0.008294	0.000000	0.011267	0.000525	0.037846	0.070887	0.004717	0.001860	0.000006	0.015064	0.004304

EXECUTIVE SUMMARY
CRIS CUSTOMER BILLING AND COLLECTION
2002 RECURRING COST STUDY
DAILY USAGE RECORD FILE

SOUTH DAKOTA

MAY 2002

Study ID 6464

READ ME FILE

DAILY USAGE RECORD FILE

SOUTH DAKOTA SGAT, MAY 2002

STUDY # 6464

Models Used In This Study

Wholesale Cost Program – Version 2.08
Cost Factors Model (TELRIC) – 02V1

Files and/of Workbooks In This Study

dailyusagerecordfile, May 2002.DOC = Document that includes the title page, read me file, table of contents, and executive summary.

dailyusagerecordfile, May 2002.XLS = Workbook that contains the calculation of the unit cost and input source data. [Tabs: Study Summary, WINPC3 Output (cost results), Total Product Costs, Investment Cost Calc, WINPC3 Investments, WINPC3 ACF Inputs, WINPC3 ACF Outputs, Dvlp Calc, Toll Data Entry]

To Generate The Cost Results Found In This Study

Values from the **"Dvlp Calc", "Toll Data Entry" tabs** within dailyusagerecordfile, May 2002.XLS must be input into the **"WINPC3 Investments" tab** of dailyusagerecordfile, May 2002.XLS.

These inputs flow through to produce the costs found on the **"WINPC3 Output" tab.** (Note: State name must remain the same otherwise the Wholesale Cost Program must be rerun.

TABLE OF CONTENTS

		PAGE
SECTION A – STUDY OUTPUT		
	EXECUTIVE SUMMARY	1
	STUDY SUMMARY	3
	COST SUMMARY – WINPC3 OUTPUT	4
	TOTAL PRODUCT COSTS	5
	INVESTMENT COST CALCULATIONS	6
SECTION B – COST CALCULATIONS		
	WINPC3 INVESTMENTS	7
	WINPC3 PARAMETERS	8
	WINPC3 ACF INPUTS	9
	WINPC3 ACF OUTPUTS	10
SECTION C – SOURCE DATA		
	DVLP CALC	13
	TOLL DATA ENTRY	14

A. PURPOSE, SCOPE, AND APPLICATION

The purpose of this study is to identify the 2002 Daily Usage Record File cost per record. The cost estimates developed herein are appropriate to QWEST operations.

B. DESCRIPTION OF ELEMENTS AND SERVICES

The Daily Usage Record File provides the accumulated set of call information for a given day as captured or recorded by the network switches. This information is a file of unrated QWEST originated usage messages and rated co-provider originated usage messages. The Daily Usage Record File contains multi-state data for the Data Processing Center generating this information.

C. STUDY METHODOLOGY

The methodology used in this study is to identify the development costs and the toll data entry costs associated with Daily Usage Record Files.

Appropriate cost factors were then applied to develop the total cost per unit.

D. TOTAL ELEMENT LONG RUN INCREMENTAL COST

Qwest performs Total Element Long Run Incremental Cost (TELRIC) studies to estimate the economic cost of providing network elements. The Qwest TELRIC studies identify the forward-looking costs associated with the provision of the total quantity of a network element in the long run. The *forward-looking* Qwest TELRIC studies identify the costs that are likely to be incurred in the future, and consider the latest forward-looking technologies and methods of operation that are currently available. These studies are *not* embedded or historical, and do not measure the impact of prior investment decisions by the corporation. The Qwest TELRIC studies also identify the *long run* costs associated with providing a network element—reflecting a time period over which all inputs (including changes in the size of facilities, levels of investment, etc.) can be adjusted.

The Qwest cost study format disaggregates the cost results, on a unitized basis, into the following components:

Investment-Based Costs and Other Element-Specific Expenses are direct costs. Investment Based Costs are associated with recurring cost elements and include the capital costs (e.g., depreciation, return, taxes) and maintenance costs associated with the investment required for provisioning a network element. Element-specific Expenses are other network element costs such as billing and for non-recurring costs, the labor-related expenses associated with the provision of a network element.

Marketing and Business Fees are direct costs for which Qwest's accounting records typically allow tracking down to a particular product or service group.

Other Direct Costs include network administration and engineering costs and various other administrative costs such as the cost of general-purpose computers and accounting and finance expenses. These costs are not directly associated with a specific network element. However, these costs vary with the provision of all network elements, and are not common to the entire firm.

Total Element Long Run Incremental Costs (TELRIC) represent the sum of all direct costs (e.g., Investment-Based Costs and Other Element-Specific Expenses, Marketing and Business Fees and Other

Direct Costs). This measure of costs includes the forward-looking costs incurred in the provision of a network element. This measure of costs is consistent with TELRIC as defined by the FCC.

Common Costs are associated with the enterprise as a whole. These costs do vary based on the total size of the firm, but do not vary with the provisioning of individual network elements. These costs are avoidable only with the elimination of the entire firm, and are sometimes referred to as *general overhead costs*.

Fully Allocated Costs represent the sum of Total Element Long Run Incremental Cost plus Common Costs (TELRIC + CC).

E. STUDY ASSUMPTIONS

F. Study Summary		
Study Name	*2002 DAILY USAGE RECORD FILE*	
Study Requester	*D. Gollehon*	
Type of Study	*TELRIC*	
Study ID	*6464*	
Cost Factor Group	*Interconnection*	
Study Applications		
Completion Date	*May 22, 2002*	
Cost Analyst	*Deborah Taylor*	
Study Review	**Reviewer**	**Date**
		May 22, 2002
Models Used	**Model**	**Version**
	Wholesale Cost Program	*2.08*
	Cost Factor Databases	*02SD01E*
	Cost Factors Model (TELRIC)	*02V1*
Cost Factors Used	**Factor**	**Effective Date**
	Capital Recovery	*04/02*
	Maintenance	*02/02*
	Ad Valorem	*02/02*
	Marketing Factors	*04/02*
	Other Direct Expenses	*04/02*
	Common	*04/02*
	Cost Of Money	*10.14%*
Inflation		
Major Cost Drivers		

Parameter File: H:\SLHILL-Team\B&C\STUDIES\Daily Usage\SD SGAT,May 2002\dailyusagerecordfile, May 2002.xls, Sheet "WINPC3 Parameters"
State(s): SD
Database Vintage: 02SD01E
Factors For: Interconnection
Report Type: ICM Format
Decimal Places: 6
Costs Format: Annual
Group Totals: Yes
ACF Input: H:\SLHILL-Team\B&C\STUDIES\Daily Usage\SD SGAT,May 2002\dailyusagerecordfile, May 2002.xls, Sheet "WINPC3 ACF Inputs'
ACF Output: H:\SLHILL-Team\B&C\STUDIES\Daily Usage\SD SGAT,May 2002\dailyusagerecordfile, May 2002.xls, Sheet "WINPC3 ACF Outputs'
Investment: H:\SLHILL-Team\B&C\STUDIES\Daily Usage\SD SGAT,May 2002\dailyusagerecordfile, May 2002.xls, Sheet "WINPC3 Investments'
Output: H:\SLHILL-Team\B&C\STUDIES\Daily Usage\SD SGAT,May 2002\dailyusagerecordfile, May 2002.xls, Sheet "WINPC3 Output"

State: South Dakota

Description	USOC	Loaded Investment	Factor	Direct Expense	Invst. Based & Mktg.	Network Support	Other Direct Expenses	TELRIC	Common	TELRIC + Common
Daily Usage Record File per Record		$0.000002	N/A	$0.000313	$0.000324	$0.000016	$0.000088	$0.000412	$0.000029	$0.000441

5/22/02 2:.. M

Row	South Dakota	Source or Calculation	Factor Value	Daily Usage Record File per Record
			A	B
1	**Investment**	sl r"Total" cD		0.000002
2				
3	***Investment Based Costs***	***sl r"Total" cK***		0.000000
4				
5	Direct Expenses			0.000313
6	Miscellaneous Expenses			0.000000
7	Billing & Collection - PL			0.000000
8	***Total Investment Based + Billing & Collection***			0.000313
9				
10	***Marketing & Business Fees***			
11	Product Management Expense	cA*(r8-r6)	0.019957	0.000006
12	Sales Expense	cA*(r8-r6)	0.011877	0.000004
13	Product Advertising Expense	cA*(r8-r6)	0.000000	0.000000
14	Business Fees (Other Operating Taxes)	cA*(Sum(r8:r13)-	0.001483	0.000000
15	***Marketing & Business Fees Total***	***Sum r11:r14***		0.000010
16				
17	***Sub-Total Invst., B & C, Mktg***	***r8 + r15***		0.000324
18				
19	***Other Direct Expenses***			
20	Network Operations	cA*(r17-r6)	0.034832	0.000011
21	Network Support Assets	cA*(r17-r6)	0.014703	0.000005
22	General Support Assets	cA*(r17-r6)	0.088742	0.000029
23	General Purpose Computers	cA*(r17-r6)	0.043342	0.000014
24	Uncollectible	cA*(r17-r6)	0.003786	0.000001
25	Accounting & Finance Expense	cA*(r17-r6)	0.007346	0.000002
26	Human Resources Expense	cA*(r17-r6)	0.008294	0.000003
27	Information Management Expense	cA*(r17-r6)	0.070887	0.000023
28	Intangibles	cA*(r17-r6)	0.000000	0.000000
29	***Total Other Direct Expenses***	***Sum r20:r28***		0.000088
30				
31	***TELRIC***	***r17 + r29***		0.000412
32				
33	***Common***			
34	Executive Expense	cA*(r31-r6)	0.011267	0.000005
35	Planning Expense	cA*(r31-r6)	0.000525	0.000000
36	External Relations Expense	cA*(r31-r6)	0.037846	0.000016
37	Legal Expense	cA*(r31-r6)	0.004717	0.000002
38	Other Procurement Expense	cA*(r31-r6)	0.001860	0.000001
39	Research & Development Expense	cA*(r31-r6)	0.000006	0.000000
40	Other General and Admin Expense	cA*(r31-r6)	0.015064	0.000006
41	***Common Costs***	***Sum r34:r40***		0.000029
42				
43	***TELRIC + Common Costs***	***r31 + r41***		0.000441

5/22/02
South Dakota

2002 DAILY USAGE RECORD FILE

Acct	FRC	Account Name	Investment	Depreciation	Cost Of Money	Income Tax	Ad Valorem	Maintenance	Switch RTU	Total Capital Costs
Daily Usage Record File per Record										
2124	2124	General Purpose Computers	0.000002	0.000000	0.000000	0.000000	0.000000	0.000000	0.000000	0.000000
		Total	**0.000002**	**0.000000**	**0.000000**	**0.000000**	**0.000000**	**0.000000**	**0.000000**	**0.000000**

	A	B	C	D	E	F	G	H	I
1	Investment								
2	STUDY	2002 DAILY USAGE RECORD FILE							
3	DATE	##							
4	GROUP	Daily Usage Record File per Record							
5	COMMON	SD	0.000309233				Development		[Tab dvlp calc]
6	LOADED	SD	0.0000018105			2124	Toll Data Entry (Assembly and Editing) Investment		[Tab Toll Data Entry]
7	COMMON	SD	0.0000037865				Toll Data Entry (Assembly and Editing) Expense		[Tab Toll Data Entry]

	A	B
1	Parameter	
2	SD	
3	7	
4	6	
5	Annual	1
6	Yes	
7	No	
8		
9	11	
10	6464	

	A	B	C	D	E	F	G	H	I	J	K	L	M	N	O	P	Q	R	S	T	U	V	W	X	Y	Z
1	ACFIN																									
2	02SD01E																									
3	2124	DEPR-AVG	COM-AVG	IT-AVG	MTNC-TOT	ADVAL	PRODMAN	SALESEXP	ADVER	BF	NTWKOP	NTWKST	GENLST	COMPTR	UNCOLL	ACCNT	HREXP	INTAN	EXEC	PLAN	EXTERN	INFOR	LEGAL	PROCR	RDEXP	GENL

	A	B	C	D	E	F	G	H	I	J	K	L	M
1	ACFOUT Factors For: Interconnection												
2	***-Run Done With Database Vintage: 02SD01E, Dated: 04/08/02***												
3	***-Wholesale Cost Program (TELRIC) Data Base released 04/02 (02SD01E).***												
4	***-Factors loaded from Factors Model (Expense Module), Version 02V1.***												
5	***-CAPITAL RECOVERY factors released 04/02 and based on 10.14% Cost***												
6	***Of Money. No 1-10 year factors developed.***												
7	***-MAINTENANCE factors released 02/02.***												
8	***-RTU factors released 02/01.***												
9	***-AD VALOREM Tax released 02/02.***												
10	***-DIRECTLY ASSIGNED expense factors released 04/02.***												
11	***-BUSINESS FEES released 04/02.***												
12	***-COMMON Expense released 04/02.***												
13	***-TOTAL INSTALLED FACTORS (TIF) released 01/01.***												
14	***-POWER investment factors released 01/01.***												
15	***-SALES TAX released 01/01.***												
16	***-TELCO Engineering factors released 01/01.***												
17	***-INTEREST DURING CONSTRUCTION released 01/01.***												
18	***-LAND AND BUILDING factors released 02/02.***												
19	***-DIRECTLY ATTRIBUTABLE expense factors released 04/02.***												
20	***-SALES EXPENSE factor released 04/02.***												
21	***-PRODUCT MANAGEMENT factor released 04/02.***												
22	***-BILLING & COLLECTION factor released 01/01.***												
23	***-PROVISIONING factors released 01/01.***												
24	***-TELEPHONE PLANT INDEX released 01/01.***												
25	***-STRUCTURE RATIO released 01/01.***												
26													
27													
28													
29													
30													
31													
32	***State:***												
33													

	A	B	C	D	E	F	G	H	I	J	K	L	M	N	O	P	Q	R
34	***ACCOUNTS***																	
35	***2124***																	
36																		
37																		
38	State:	South Dakota																
39																		
40	**ACCOUNT**	**DEPR-AVG**	**COM-AVG**	**IT-AVG**	**MTNC-TOT**	**ADVAL**	**PRODMAN**	**SALESEXP**	**ADVER**	**BF**	**NTWKOP**	**NTWKST**	**GENLST**	**COMPTR**	**UNCOLL**	**ACCNT**	**HREXP**	**INTAN**
41	2124	0.164850	0.047620	0.018008	0.000000	0.009546	0.019957	0.011877	0.000000	0.001483	0.034832	0.014703	0.088742	0.043342	0.003786	0.007346	0.008294	0.000000

	S	T	U	V	W	X	Y	Z
34								
35								
36								
37								
38								
39								
40	**EXEC**	**PLAN**	**EXTERN**	**INFOR**	**LEGAL**	**PROCR**	**RDEXP**	**GENL**
41	0.011267	0.000525	0.037846	0.070887	0.004717	0.001860	0.000006	0.015064

	2001	**2002**
Total Lines - QWEST*	1,049,721	1,274,362
Msg/Line(Acct)/Mo.*	15	15
Total Msg/Mo.	15,745,815	19,115,430
	12	12
Total Ann. Msgs	188,949,780	229,385,160

Composite Cost Of Capital - SD	**10.14%**
Pretax Discount Rate - SD	**13.98%**

Annual Message Volume Development	
	2 Year Forecast
NPV	360,647,064
A/P	208,191,895

MCR Recurring Cost Development	
2000 Hourly Labor Rate*	$ 60.49
Total MCR Hours	1,753
Total MCR Nonrecurring Cost	$106,039

Annual MCR Recurring Payments	
	2 Year
A/P	$64,380

Per Message Cost Development		
	2 Year	
	C27/C18	
Cost Per Message	***$0.000309***	To WINPC3 Investments Tab

* NOTE:
QWEST Volumes (2001-2002 forecast) from Product Management.
Msg/Line(Acct)/Mo. taken from the 2000 3rd Party Billing Study dated June 2000.
2000 Hourly Labor Rate - 6724.1 Acct./Subacct.

	A	B	C	D	E	F	G	H
1								
2								
3								
4	**CRIS CDP summary**					Volume	Service	Shared
5	**2000 Study year**					Sensitive	Specific	Residual
6						Processing	Fixed	
7					*Reference*			
8					Tab 22	**INV**		**EXP**
9	**Toll data entry**			seconds per message	0.000099	*$0.000002*		*$0.000004*
10	Toll data entry			CDP - per message				

Study ID #6465
Version 1.0 Created 6/3/02, 9:53:02 AM

South Dakota

Qwest

Collocation Model (CM) Interconnection TELRIC Results

2002 Cost Study



CM Output
Table of Contents

Description	Section
Summary of Results	A
Development of Total Product Costs	B
Investment Cost Calculation	C
Defaults and Overrides	D
Expense and Investment Development	E
Expense Factors	F
Investment Factors	G
Land and Building Factors	H
Run Data	I

Version 1.0 Created 6/3/02, 9:53:02 AM
South Dakota

	Units	90 Day Initial Charge (sA p6-9)	90 Day Monthly Rate (sA p6-9)
1 Standard Collocation			
1.1 Terminations			
DS0			
Cable Placement	Per Block	$222.83	$0.1254
	Per Termination	$4.18	$0.0024
Cable	Per Block	$337.43	$0.1899
	Per Termination	$4.62	$0.0026
Blocks	Per Block	$584.42	$0.3288
	Per Termination	$8.01	$0.0045
Block Placement	Per Block	$233.30	$0.1313
	Per Termination	$3.20	$0.0018
DS1			
Cable Placement	Per Block	$388.16	$0.7189
	Per Termination	$41.74	$0.0773
Cable	Per Block	$389.51	$0.7214
	Per Termination	$41.88	$0.0776
Panel	Per Block	$267.20	$0.4948
	Per Termination	$32.09	$0.0594
Panel Placement	Per Block	$79.35	$0.1470
	Per Termination	$8.53	$0.0158
DS3			
Cable Placement	Per Termination	$143.78	$0.2663
Cable	Per Termination	$251.53	$0.4658
Panel/Connector	Per Termination	$255.73	$0.4736
Panel/Connector Placement	Per Termination	$19.82	$0.0367
1.2 Entrance Facility			
Standard Shared	Per Fiber	$666.68	$6.81
Cross Connect	Per Fiber	$781.94	$7.02
Express	Per Cable	$9,741.28	$109.11
1.3 Cable Splicing			
Setup	Per Setup	$511.69	
Per fiber Spliced	Per Fiber	$38.72	

Version 1.0 Created 6/3/02, 9:53:02 AM
South Dakota

	Units	90 Day Initial Charge (sA p6-9)	90 Day Monthly Rate (sA p6-9)
1.4 Power Usage			
Power Plant per Amp Ordered			
Power Plant Less than 60 AMPS	Per AMP Ordered		$12.53
Power Plant Equal to or Greater than 60 Amps	Per AMP Ordered		$9.76
Power Usage-Less than 60 AMPS	Per AMP Ordered		$2.27
Power Usage-More than 60 AMPS	Per AMP Used		$4.54
Backup AC Power Feed Usage			
120 V	Per Amp Per Month		$20.27
208 V, Single Phase	Per Amp Per Month		$35.14
208 V, Three Phase	Per Amp Per Month		$60.80
240 V, Single Phase	Per Amp Per Month		$40.55
240 V, Three Phase	Per Amp Per Month		$70.15
480 V, Three Phase	Per Amp Per Month		$140.30
Backup AC Power Cable			
20 Amp, Single Phase	Per Foot, Per Month	$8.14	$0.0151
20 Amp, Three Phase	Per Foot, Per Month	$10.10	$0.0187
30 Amp, Single Phase	Per Foot, Per Month	$8.78	$0.0163
30 Amp, Three Phase	Per Foot, Per Month	$12.06	$0.0223
40 Amp, Single Phase	Per Foot, Per Month	$10.33	$0.0191
40 Amp, Three Phase	Per Foot, Per Month	$14.21	$0.0263
50 Amp, Single Phase	Per Foot, Per Month	$12.25	$0.0227
50 Amp, Three Phase	Per Foot, Per Month	$17.10	$0.0317
60 Amp, Single Phase	Per Foot, Per Month	$13.85	$0.0257
60 Amp, Three Phase	Per Foot, Per Month	$19.69	$0.0365
100 Amp, Single Phase	Per Foot, Per Month	$17.15	$0.0318
100 Amp, Three Phase	Per Foot, Per Month	$26.78	$0.0496
1.5 Security			
Access Card	Per Employee		$0.85
Card Access	Per Person per Office per Month		$7.04
1.6 Central office Clock Synchronization	Per Port		$8.49
1.7 Interconnection Tie Pair			
DS0	Per Connection		$0.50
DS1	Per Connection		$1.46
DS3	Per Connection		$17.42

Version 1.0 Created 6/3/02, 9:53:02 AM
South Dakota

	Units	90 Day Initial Charge (sA p6-9)	Monthly Rate (sA p6-9)
2 Cageless Collocation			
2.1 Space Construction			
Space Construction	Space for 2 Bays	$21,299.26	$39.45
Each Additional Bay	Per Bay	$471.75	$0.87
DC Power Cable			
20 Amp	Per Feed	$4,521.83	$8.37
30 Amp	Per Feed	$5,148.43	$9.53
40 Amp	Per Feed	$6,218.08	$11.52
60 Amp	Per Feed	$11,012.44	$20.39
100 Amp	Per Feed	$18,573.95	$34.40
200 Amp	Per Feed	$34,575.21	$64.03
300 Amp	Per Feed	$54,367.53	$100.69
400 Amp	Per Feed	$77,194.68	$142.96
2.2 Rent	Per Square Foot		$3.0297
2.3 Quote Preparation Fee	Per Collocation Ordered	$4,469.55	

Version 1.0 Created 6/3/02, 9:53:02 AM
South Dakota

	Units	90 Day Initial Charge (sA p6-9)	Monthly Rate (sA p6-9)
3 Caged Collocation			
3.1 Space Construction			
Space Construction	Cage-Up to 100 Sq Ft	$37,019.76	$68.56
	Cage-101 Sq Ft to 200 Sq Ft	$32,842.03	$60.82
	Cage-201 Sq Ft to 300 Sq Ft	$40,554.00	$75.11
	Cage-301 Sq Ft to 400 Sq Ft	$42,491.50	$78.69
Space Construction - Fencing Credit			
Fencing Credit	Cage-Up to 100 Sq Ft	($5,590.02)	($10.35)
	Cage-101 Sq Ft to 200 Sq Ft	($6,969.92)	($12.91)
	Cage-201 Sq Ft to 300 Sq Ft	($7,828.84)	($14.50)
	Cage-301 Sq Ft to 400 Sq Ft	($8,645.52)	($16.01)
If contract has provisions to collect and retain a Quote Preparation fee that fee would be deducted from the space construction charge			
DC Power Cable			
20 Amp	Per Feed	$5,621.76	$10.41
30 Amp	Per Feed	$6,192.23	$11.47
40 Amp	Per Feed	$7,404.38	$13.71
60 Amp	Per Feed	$12,222.79	$22.64
100 Amp	Per Feed	$19,890.97	$36.84
200 Amp	Per Feed	$37,026.82	$68.57
300 Amp	Per Feed	$58,222.54	$107.83
400 Amp	Per Feed	$82,668.28	$153.10
3.2 Grounding			
#2 AWG	Per Foot	$9.68	$0.0179
1/0 AWG	Per Foot	$17.04	$0.0316
4/0 AWG	Per Foot	$20.05	$0.0371
350 KCMIL	Per Foot	$25.88	$0.0479
500 KCMIL	Per Foot	$29.95	$0.0555
750 KCMIL	Per Foot	$45.66	$0.0846
3.3 Rent	Per Square Foot		$3.03
3.4 Quote Preparation Fee	Per Collocation Ordered	$4,859.69	

Version 1.0 Created 6/3/02, 9:53:02 AM
South Dakota

	Units	90 Day Initial Charge (sA p6-9)	Monthly Rate (sA p6-9)
4 Virtual Collocation			
4.1 Equipment Bay	Per Shelf		$4.37
4.2 Labor			
Maintenance - Regular Business Hours	Per 1/2 Hour	$28.54	
Maintenance - Outside Regular Business Hours	Per 1/2 Hour	$38.19	
Training - Regular Business Hours	Per 1/2 Hour	$28.54	
Inspector - Regular Business Hours	Per 1/2 Hour	$32.54	
Inspector - Outside Regular Business Hours	Per 1/2 Hour	$41.90	
Installation - Regular Business Hours	Per 1/2 Hour	$32.54	
Installation - Outside Regular Business Hours	Per 1/2 Hour	$41.90	
Engineering - Regular Business Hours	Per 1/2 Hour	$30.79	
Engineering - Outside Regular Business Hours	Per 1/2 Hour	$39.75	
4.3 Quote Preparation Fee	Per Collocation Ordered	$4,469.55	

South Dakota
Interconnection Services
Collocation

Cost Element	Investment	TELRIC	Common	TELRIC + Common
	sB r1	sB r28	sB r38	
Version 1.0 Created 6/3/02, 9:53:02 AM				
1 Standard Collocation				
1.1 Terminations				
1.1.1 Terminations - 45 Day Installation				
1.1.2 Terminations - 90 Day Installation				
DS0 - 90 Day Installation				
DS0 Cable Placement per 100 Pair Block - 90 Day		$208.00	$14.83	$222.83
DS0 Cable Placement per Termination - 90 Day		$3.90	$0.28	$4.18
DS0 Cable per 100 Pair Block - 90 Day		$314.98	$22.45	$337.43
DS0 Cable per Termination - 90 Day		$4.31	$0.31	$4.62
DS0 Blocks per 100 Pair Block - 90 Day		$545.53	$38.89	$584.42
DS0 Blocks per Termination - 90 Day		$7.47	$0.53	$8.01
DS0 Block Placement per 100 Pair Block - 90 Day		$217.77	$15.52	$233.30
DS0 Block Placement per Termination - 90 Day		$2.98	$0.21	$3.20
DS1 - 90 Day Installation				
DS1 Cable Placement per 28 DS1s - 90 Day		$362.33	$25.83	$388.16
DS1 Cable Placement per Termination - 90 Day		$38.96	$2.78	$41.74
DS1 Cable per 28 DS1s - 90 Day		$363.59	$25.92	$389.51
DS1 Cable per per Termination - 90 Day		$39.10	$2.79	$41.88
DS1 Panel per 28 DS1s - 90 Day		$249.42	$17.78	$267.20
DS1 Panel per Termination - 90 Day		$29.96	$2.14	$32.09
DS1 Panel Placement per 28 DS1s - 90 Day		$74.07	$5.28	$79.35
DS1 Panel Placement per Termination - 90 Day		$7.96	$0.57	$8.53
DS3 - 90 Day Installation				
DS3 Cable Placement per Termination - 90 Day		$134.22	$9.57	$143.78
DS3 Cable per Termination - 90 Day		$234.79	$16.74	$251.53
DS3 Connector per Termination - 90 Day		$238.71	$17.02	$255.73
DS3 Connector Placement per Termination - 90 Day		$18.50	$1.32	$19.82
1.1.3 Terminations - Monthly Charge				
DS0 - Monthly Charge				
DS0 Cable Placement per 100 pair per month		$0.1170	$0.0083	$0.1254
DS0 Cable Placement per Termination per month		$0.0022	$0.0002	$0.0024
DS0 Cable per 100 pair per month		$0.1772	$0.0126	$0.1899
DS0 Cable per Termination per month		$0.0024	$0.0002	$0.0026
DS0 Blocks per 100 pair per month		$0.3069	$0.0219	$0.3288
DS0 Blocks per Termination per month		$0.0042	$0.0003	$0.0045
DS0 Block Placement per 100 pair per month		$0.1225	$0.0087	$0.1313
DS0 Block Placement per Termination per month		$0.0017	$0.0001	$0.0018
DS1 - Monthly Charge				
DS1 Cable Placement per 28 DS1s per month		$0.6710	$0.0478	$0.7189
DS1 Cable Placement per Termination per month		$0.0722	$0.0051	$0.0773
DS1 Cable per 28 DS1s per month		$0.6734	$0.0480	$0.7214
DS1 Cable per per Termination per month		$0.0724	$0.0052	$0.0776
DS1 Panel per 28 DS1s per month		$0.4619	$0.0329	$0.4948
DS1 Panel per Termination per month		$0.0555	$0.0040	$0.0594
DS1 Panel Placement per 28 DS1s per month		$0.1372	$0.0098	$0.1470
DS1 Panel Placement per Termination per month		$0.0148	$0.0011	$0.0158
DS3 - Monthly Charge				
DS3 Cable Placement per Termination per month		$0.2486	$0.0177	$0.2663
DS3 Cable per Termination per month		$0.4348	$0.0310	$0.4658
DS3 Connector per Termination per month		$0.4421	$0.0315	$0.4736
DS3 Connector Placement per Termination per month		$0.0343	$0.0024	$0.0367
1.2 Entrance Facility				
1.2.1 Entrance Facility - 90 Day Installation				
Standard Shared Per Fiber		$622.32	$44.36	$666.68
Cross Connect per Fiber		$729.91	$52.03	$781.94
Express per Cable		$9,093.08	$648.20	$9,741.28
1.2.2 Entrance Facility - Monthly Charge				
Standard Shared Per Fiber per month	$385.00	$6.35	$0.45	$6.81
Cross Connect per Fiber per month	$385.00	$6.55	$0.47	$7.02
Express per Cable per month	$6,741.33	$101.85	$7.26	$109.11
1.3 Cable Splicing - 90 Day Installation				
Setup		$477.64	$34.05	$511.69
Per fiber Spliced		$36.15	$2.58	$38.72

South Dakota
Interconnection Services
Collocation

Cost Element	Investment	TELRIC	Common	TELRIC + Common
	sB r1	sB r28	sB r38	
1.4 Power Usage				
1.4.1 Power Plant per Amp Ordered				
Power Plant per Amp Ordered Less than 60 AMPS	$539.47	$11.6952	$0.8337	$12.5289
Power Plant per Amp Ordered Equal to or Greater than 60 Amps	$420.31	$9.1119	$0.6495	$9.7614
Power Usage-Less than 60 AMPS per Amp Ordered		$2.12	$0.15	$2.27
Power Usage-More than 60 AMPS per Amp Ordered		$4.24	$0.30	$4.54
1.4.2 Backup AC Power Feed Usage - Monthly Charges				
120 V per Amp per Month	$361.51	$18.93	$1.35	$20.27
208 V, Single Phase per Amp per Month	$626.62	$32.80	$2.34	$35.14
208 V, Three Phase per Amp per Month	$1,084.06	$56.75	$4.05	$60.80
240 V, Single Phase per Amp per Month	$723.03	$37.85	$2.70	$40.55
240 V, Three Phase per Amp per Month	$1,250.83	$65.48	$4.67	$70.15
480 V, Three Phase per Amp per Month	$2,501.67	$130.96	$9.34	$140.30
1.4.3 Backup AC Power Cable - 90 Day Installation				
20 Amp, Single Phase - Initial Charge per Foot		$7.60	$0.54	$8.14
20 Amp, Three Phase - Initial Charge per Foot		$9.42	$0.67	$10.10
30 Amp, Single Phase - Initial Charge per Foot		$8.20	$0.58	$8.78
30 Amp, Three Phase - Initial Charge per Foot		$11.26	$0.80	$12.06
40 Amp, Single Phase - Initial Charge per Foot		$9.64	$0.69	$10.33
40 Amp, Three Phase - Initial Charge per Foot		$13.27	$0.95	$14.21
50 Amp, Single Phase - Initial Charge per Foot		$11.43	$0.82	$12.25
50 Amp, Three Phase - Initial Charge per Foot		$15.96	$1.14	$17.10
60 Amp, Single Phase - Initial Charge per Foot		$12.93	$0.92	$13.85
60 Amp, Three Phase - Initial Charge per Foot		$18.38	$1.31	$19.69
100 Amp, Single Phase - Initial Charge per Foot		$16.01	$1.14	$17.15
100 Amp, Three Phase - Initial Charge per Foot		$25.00	$1.78	$26.78
1.4.4 Backup AC Power Cable - Monthly Charges				
20 Amp, Single Phase per Foot per Month		$0.0141	$0.0010	$0.0151
20 Amp, Three Phase per Foot per Month		$0.0175	$0.0012	$0.0187
30 Amp, Single Phase per Foot per Month		$0.0152	$0.0011	$0.0163
30 Amp, Three Phase per Foot per Month		$0.0208	$0.0015	$0.0223
40 Amp, Single Phase per Foot per Month		$0.0179	$0.0013	$0.0191
40 Amp, Three Phase per Foot per Month		$0.0246	$0.0018	$0.0263
50 Amp, Single Phase per Foot per Month		$0.0212	$0.0015	$0.0227
50 Amp, Three Phase per Foot per Month		$0.0296	$0.0021	$0.0317
60 Amp, Single Phase per Foot per Month		$0.0239	$0.0017	$0.0257
60 Amp, Three Phase per Foot per Month		$0.0340	$0.0024	$0.0365
100 Amp, Single Phase per Foot per Month		$0.0296	$0.0021	$0.0318
100 Amp, Three Phase per Foot per Month		$0.0463	$0.0033	$0.0496
1.5 Security				
Access Card per Employee	$9.57	$0.80	$0.06	$0.85
Card Access Per Person per Office per Month	$250.00	$6.57	$0.47	$7.04
1.6 Central office Clock Synchronization				
C O Clock Synchronization per Port	$365.50	$7.92	$0.56	$8.49
1.7 Interconnection Tie Pair				
DS0 Per Connection	$23.09	$0.47	$0.03	$0.50
DS1 Per Connection	$62.77	$1.36	$0.10	$1.46
DS3 Per Connection	$750.00	$16.26	$1.16	$17.42
Space Construction - General				
2 Cageless Collocation				
2.1 Space Construction				
2.1.1 Space Construction - 45 Day Installation				
2.1.2 Space Construction - 90 Day Installation				
Space Construction for 2 Bays - 90 Day		$19,881.97	$1,417.30	$21,299.26
Space Construction Adjustment for Each Additional Bay - 90 Day		$440.36	$31.39	$471.75
20A DC Power Feed - 90 Day		$4,220.94	$300.89	$4,521.83
30A DC Power Feed - 90 Day		$4,805.85	$342.59	$5,148.43
40A DC Power Feed - 90 Day		$5,804.31	$413.76	$6,218.08
60A DC Power Feed - 90 Day		$10,279.65	$732.79	$11,012.44
100A DC Power Feed - 90 Day		$17,338.00	$1,235.95	$18,573.95
200A DC Power Feed - 90 Day		$32,274.51	$2,300.70	$34,575.21
300A DC Power Feed - 90 Day		$50,749.80	$3,617.73	$54,367.53
400A DC Power Feed - 90 Day		$72,057.99	$5,136.69	$77,194.68

South Dakota
Interconnection Services
Collocation

Cost Element	Investment	TELRIC	Common	TELRIC + Common
	sB r1	sB r28	sB r38	
2.1.3 Space Monthly Charge				
Space Monthly Charge for 2 Bays		$36.82	$2.62	**$39.45**
Space Monthly Charge Adjustment for Each Additional Bay per Month		$0.82	$0.06	**$0.87**
Space Monthly Charge for 20A DC Power Feed per Month		$7.82	$0.56	**$8.37**
Space Monthly Charge for 30A DC Power Feed per Month		$8.90	$0.63	**$9.53**
Space Monthly Charge for 40A DC Power Feed per Month		$10.75	$0.77	**$11.52**
Space Monthly Charge for 60A DC Power Feed per Month		$19.04	$1.36	**$20.39**
Space Monthly Charge for 100A DC Power Feed per Month		$32.11	$2.29	**$34.40**
Space Monthly Charge for 200A DC Power Feed per Month		$59.77	$4.26	**$64.03**
Space Monthly Charge for 300A DC Power Feed per Month		$93.99	$6.70	**$100.69**
Space Monthly Charge for 400A DC Power Feed per Month		$133.45	$9.51	**$142.96**
2.2 Rent				
Rent per Square Foot	$170.44	$2.8281	$0.2016	**$3.0297**
2.3 Quote Preparation Fee - Cageless Construction				
Quotation Preparation Fee		$4,172.13	$297.41	**$4,469.55**
3 Caged Collocation				
3.1 Space Construction				
3.1.1 Space Construction - 90 Day Installation				
Cage-Up to 100 Sq Ft - 90 Day		$34,556.39	$2,463.37	**$37,019.76**
Cage-101 Sq Ft to 200 Sq Ft - 90 Day		$30,656.66	$2,185.38	**$32,842.03**
Cage-201 Sq Ft to 300 Sq Ft - 90 Day		$37,855.46	$2,698.55	**$40,554.00**
Cage-301 Sq Ft to 400 Sq Ft - 90 Day		$39,664.03	$2,827.47	**$42,491.50**
Space Construction - Fencing Credit				
Cage-Up to 100 Sq Ft - Fencing Credit		-$5,218.05	-$371.97	**-$5,590.02**
Cage-101 Sq Ft to 200 Sq Ft - Fencing Credit		-$6,506.13	-$463.79	**-$6,969.92**
Cage-201 Sq Ft to 300 Sq Ft - Fencing Credit		-$7,307.90	-$520.95	**-$7,828.84**
Cage-301 Sq Ft to 400 Sq Ft - Fencing Credit		-$8,070.23	-$575.29	**-$8,645.52**
3.1.2 intentionally left blank				
3.1.3 DC Power Feed - 90 Day				
20A DC Power Feed - 90 Day		$5,247.68	$374.08	**$5,621.76**
30A DC Power Feed - 90 Day		$5,780.18	$412.04	**$6,192.23**
40A DC Power Feed - 90 Day		$6,911.68	$492.70	**$7,404.38**
60A DC Power Feed - 90 Day		$11,409.46	$813.33	**$12,222.79**
100A DC Power Feed - 90 Day		$18,567.38	$1,323.59	**$19,890.97**
200A DC Power Feed - 90 Day		$34,562.98	$2,463.84	**$37,026.82**
300A DC Power Feed - 90 Day		$54,348.29	$3,874.25	**$58,222.54**
400A DC Power Feed - 90 Day		$77,167.37	$5,500.92	**$82,668.28**
3.1.4 Space Monthly Charge				
Cage-Up to 100 Sq Ft Monthly Charge		$64.00	$4.56	**$68.56**
Cage-101 Sq Ft to 200 Sq Ft Monthly Charge		$56.78	$4.05	**$60.82**
Cage-201 Sq Ft to 300 Sq Ft Monthly Charge		$70.11	$5.00	**$75.11**
Cage-301 Sq Ft to 400 Sq Ft Monthly Charge		$73.46	$5.24	**$78.69**
Space Monthly Charge - Fencing Credit				
Cage-Up to 100 Sq Ft Monthly Charge - Fencing Credit		-$9.66	-$0.69	**-$10.35**
Cage-101 Sq Ft to 200 Sq Ft Monthly Charge - Fencing Credit		-$12.05	-$0.86	**-$12.91**
Cage-201 Sq Ft to 300 Sq Ft Monthly Charge - Fencing Credit		-$13.53	-$0.96	**-$14.50**
Cage-301 Sq Ft to 400 Sq Ft Monthly Charge - Fencing Credit		-$14.95	-$1.07	**-$16.01**
3.1.5 Intentionally left blank				
3.1.6 DC Power Feed Monthly Charge				
Space Monthly Charge for 20A DC Power Feed		$9.72	$0.69	**$10.41**
Space Monthly Charge for 30A DC Power Feed		$10.70	$0.76	**$11.47**
Space Monthly Charge for 40A DC Power Feed		$12.80	$0.91	**$13.71**
Space Monthly Charge for 60A DC Power Feed		$21.13	$1.51	**$22.64**
Space Monthly Charge for 100A DC Power Feed		$34.39	$2.45	**$36.84**
Space Monthly Charge for 200A DC Power Feed		$64.01	$4.56	**$68.57**
Space Monthly Charge for 300A DC Power Feed		$100.65	$7.18	**$107.83**
Space Monthly Charge for 400A DC Power Feed		$142.91	$10.19	**$153.10**
3.2 Grounding				
Grounding - 90 Day Installation				
#2 AWG per Foot - 90 Day		$9.04	$0.64	**$9.68**
1/0 AWG per Foot - 90 Day		$15.91	$1.13	**$17.04**
4/0 AWG per Foot - 90 Day		$18.72	$1.33	**$20.05**
350 KCMIL per Foot - 90 Day		$24.16	$1.72	**$25.88**
500 KCMIL per Foot - 90 Day		$27.96	$1.99	**$29.95**

South Dakota
Interconnection Services
Collocation

Cost Element	Investment	TELRIC	Common	TELRIC + Common
	sB r1	sB r28	sB r38	
750 KCMIL per Foot - 90 Day		$42.63	$3.04	**$45.66**
Grounding - Monthly Charge				
#2 AWG per Foot Monthly Charge		$0.0167	$0.0012	**$0.0179**
1/0 AWG per Foot Monthly Charge		$0.0295	$0.0021	**$0.0316**
4/0 AWG per Foot Monthly Charge		$0.0347	$0.0025	**$0.0371**
350 KCMIL per Foot Monthly Charge		$0.0447	$0.0032	**$0.0479**
500 KCMIL per Foot Monthly Charge		$0.0518	$0.0037	**$0.0555**
750 KCMIL per Foot Monthly Charge		$0.0789	$0.0056	**$0.0846**
3.3 Rent				
Rent per Square Foot	$170.44	$2.83	$0.20	**$3.03**
3.4 Quote Preparation Fee - Caged Construction				
Quotation Preparation Fee - Caged Construction		$4,536.32	$323.37	**$4,859.69**
4 Virtual Collocation				
4.1 Equipment Bay				
Equipment Bay per Shelf	$187.97	$4.08	$0.29	**$4.37**
4.2 Labor				
Maintenance - Regular Business Hours Per 1/2 Hour		$26.64	$1.90	**$28.54**
Maintenance - Outside Regular Business Hours Per 1/2 Hour		$35.65	$2.54	**$38.19**
Training - Regular Business Hours Per 1/2 Hour		$26.64	$1.90	**$28.54**
Inspector - Regular Business Hours Per 1/2 Hour		$30.38	$2.17	**$32.54**
Inspector - Outside Regular Business Hours Per 1/2 Hour		$39.11	$2.79	**$41.90**
Installation - Regular Business Hours Per 1/2 Hour		$30.38	$2.17	**$32.54**
Installation - Outside Regular Business Hours Per 1/2 Hour		$39.11	$2.79	**$41.90**
Engineering - Regular Business Hours Per 1/2 Hour		$28.75	$2.05	**$30.79**
Engineering - Outside Regular Business Hours Per 1/2 Hour		$37.11	$2.65	**$39.75**
4.3 Quote Preparation Fee - Virtual				
Quotation Preparation Fee - Virtual		$4,172.13	$297.41	**$4,469.55**

Cell: A2
Comment: This spreadsheet is a summary of the costs calculated in Section B.

Cell: A9
Comment: 1.1 Terminations
Nonrecurring One Time Charge
Terminations are the network connections between the CLEC equipment and the Qwest network. These connections can be at a DS0, DS1 or DS3 level. The CLEC requires these elements to connect their equipment to the unbundled elements they are purchasing from Qwest. For example, an unbundled loop purchased by a CLEC will terminate on Qwest's network. The CLEC needs to have facilities to connect this unbundled loop to the equipment in their collocation space. Terminations are the cables and blocks that are used to make this connection. The termination costs are broken into four components:

1. The cables which are used to make the connection;
2. The blocks and panels needed to terminate the cables on the Qwest network;
3. The cost of placing the cable in the cable racks; and
4. The cost of placing the panels and blocks on the intermediate distribution frame.

Each of these components is broken out separately to allow the CLEC the opportunity to self-provision portions of these connections. If a CLEC prefers to supply its own cable or blocks, the rate for cable or blocks would not be assessed. However, the placement rates would still apply if Qwest places the blocks and the cable. Terminations end at a CLEC's equipment and are therefore dedicated to providing that CLEC service. All these costs are incurred solely for the collocator and will be recovered through a one-time charge based on the number of terminations, which are ordered. Terminations can be ordered on an individual basis or in quantities of 100 pairs for DS0's and 28 pairs for DS1's. The cost for bundles of cables represents the economies of 100 percent utilization of the placed facilities.

The nonrecurring cost does not include the cost of a dedicated frame (SPOT Frame), the cost of regenerating the signal to provide a higher grade of service, a direct connection to the COSMIC frame or other special configurations that may be requested by the carrier. Carriers requesting unique configurations for terminating their services to their collocation space will be charged on a case by case basis based on the actual cost of building the unique configuration.

Recurring Monthly Charge

There is also a small monthly recurring charge for maintaining these connections.

Cell: A10
Comment: 45-day installation is available only as required under contract provisions or in states where required by law.

Cell: A83
Comment: 1.2 Entrance Facility
Nonrecurring One Time Charge
Entrance facility is the connection between the CLEC cable outside the office and the CLEC facilities within the office. The costs include the manhole where the CLEC cable enters Qwest's facilities, the conduit between the manhole and the Central Office, the cable running from the manhole to the CLEC space and the structure, such as cable racking, used to support the cables. The placement costs for all the cable and equipment is also included. The cost is on a per fiber basis and must be ordered in quantities of 12 (the number of fibers in the standard cable). To place these cables the company has, in some instances, had to place new cable racking and new manholes to accommodate the CLEC's cable. The nonrecurring costs reflect the fact that a certain percentage of the time new facilities are required. These costs, when they are incurred, are spread over the number of CLEC's that are anticipated to use the facilities. The cable is also included in the nonrecurring charge since it is dedicated solely to the use of the requesting CLEC.
Recurring Monthly Charge
There is also a small recurring monthly charge for the cost using existing cable racking and other cable support facilities and the cost of maintaining all of the facilities used to provide this service to the CLEC.

Cell: A93
Comment: 1.3 Fiber Cable Splicing
The Fiber Cable Splicing elements represent the labor and equipment to perform a splice.
-The "Per Setup" element includes the labor required for an outside plant technician to perform all necessary tasks prior to the actual splicing and to install the splice case.
-The "Per Splice" element covers the labor to splice and test each fiber to each side of the splice case.

Cell: A97
Comment: 1.4 Power Usage
Recurring Monthly Charge
There are recurring monthly charges for power usage. Power usage includes the cost of purchasing power from the electric company and the cost of the power plant. Power usage is broken down into three rates:

1. A rate for the use of the power plant that is charged based on the size of the power feed of feeds that the CLEC orders;
2. A flat monthly power usage rate for each type of power feed that is smaller than 100 AMPs; and
3. A per AMP rate for power usage that is delivered on power feeds that are larger than 60 AMPs.

The power plant consists of the backup power generator, rectifiers, power boards, battery distribution frame boards (BDFB's), batteries and the cable and support structure that connects all these components. The power plant generates and stores power for use during potential outages converts standard AC power to the DC power used by telecommunications equipment and distributes the power to those areas of the central office where the power is to be used. The monthly charge reflects the capital and maintenance costs associated with maintaining this system. The monthly charge is based on the size of the power feed requested by the CLEC.

The usage charge for power consists of the cost of purchasing AC power from an external company. This charge will vary by actual amount of power used by a CLEC during a given period. Unfortunately for power feeds of less than 100 AMPs Qwest does not have the equipment at the BDFB to measure actual power usage. The cost of placing such measurement equipment would far exceed any benefits that could be obtained and would need to be recovered through an additional charge to the CLECs. For this reason, Qwest adopted an assumption that power usage on CLEC power feeds of less than 100 AMPs should be assumed to be 50 % of the actual capacity of the feed. For power cable of 100 AMPs or more the measurement capabilities currently exists so the charge for power will be based on actual usage.

Cell: A137
Comment: 1.5 Security
Provides for the security systems (e.g., card readers, identification cards, etc.) at Qwest wire centers so carriers can have access to their collocation space.

Cell: A141
Comment: 1.6 Composite Clock/CO Synchronization
This element provides Composite Clock and/or DS1 Synchronization signals traceable to a Stratum 1 source. The interconnector must determine the IDE synchronization requirements and notify Qwest of these requirements when ordering the clock signals. The Composite Clock signal is a 64 kHz, nominal 5/8 duty cycle, bipolar return-to-zero signal with a bipolar violation every eighth pulse. The DS1 Clock signal is a framed, all-ones, 1.544 Mb/s (DS1) signal using the superframe frame format and the Alternate Mark Inversion line code. CO Synchronization is required for VEIC Service involving digital services or connections. Synchronization may be required for analog services, depending on the IDE involved. CO Synchronization is available where Qwest wire centers are equipped with Building Integrated Timing Supply (BITS).

Cell: A144
Comment: 1.7 Interconnection Tie Pairs (ITP)
Recurring Monthly Charge
Interconnection Tie Pairs are the connection between the shared frame, where the terminations are tied, and the COSMIC frame. The cost of the ITP includes blocks on the shared frame, the shared frame, connections to the COSMIC frame and the cable and cable racking running between the shared frame and the COSMIC frame. The cost of placing all these facilities is also included in the overall costs. ITP's are part of the existing integrated Qwest network. Since these facilities will in most instances already exist and can be shared amongst various CLEC's and Qwest, the costs will be recovered through a monthly recurring charge based on the number of connections being used by any one CLEC during the period.

Cell: A149
Comment: Space Construction - General
Nonrecurring One Time Charge
At the request of CLECs, Qwest is offering a standard price for space construction. There are separate prices for standard caged and cageless collocation configurations. The standard costs for both cageless and caged collocation includes:

1. The costs for a single power feed;
2. The cost of new overhead structure to support cable racking and CLEC collocated equipment;
3. The cost of new cable racking required to carry the CLEC's power cable and terminations to the existing cable racking network;
4. The average cost of any new lighting that may be required to illuminate the CLEC's space;
5. The cost of engineering the collocation job; and
6. Additions to the cooling system (i.e. HVAC) and electromechanical system to extend the network to get incidental power and cooling to the CLECs collocation area.

The above costs although not identical for each type of collocation, are common to both caged and cageless collocation. The cost for common structure, such as cable racking, lighting and Arial support structure, is prorated between anticipated number of carriers that will be sharing the use of the structure. Facilities that are dedicated for the sole use of an individual CLEC, such as power cable, are assigned directly to that CLEC's job. The standard costs reflect the most opted for configurations. Adjustment factor s for costs for requested variations to the standard configurations are also identified for those companies seeking a different space design.

The engineering component of the standard configuration for both caged and cageless collocation includes all preliminary engineering costs that were incurred as a result of preparing the original quote. In some contracts there is a separate charge for this preliminary engineering that is assessed to the CLEC at the time that the quote is initiated. To the extent that the CLEC has paid a quote preparation fee that is nonrefundable and therefore retained by Qwest, the amount of that fee that is retained should be deducted from the standard space construction charge in determining the additional amount that that CLEC still owes to the company.

Cell: A151
Comment: 2.1 Space Construction-Cageless collocation
Standard Space Construction Charge
In addition to the facilities listed under Space Construction - General, the standard cageless collocation space construction charge includes the ground cable for the CLEC's equipment. It does not include DC power feeds which are priced separately. The standard cost does not include the cost of the actual bays in which the CLEC places its equipment. These bays are self-provisioned by the CLEC. The standard space construction charge for cageless collocation varies between states based on whether they are located in an earthquake prone zone. Additional structural support is required in stated with a high risk of damage from earthquakes (i.e. Washington, Oregon, Utah, Arizona, Idaho, Wyoming and Montana). Two standard rates are calculated for cageless collocation to reflect these differences.

Cell: A152

Comment: 45-day installation is available only as reuired under contract provisions or in states where required by law.

Cell: A161
Comment: Additional Bays
A CLEC also has the option of requesting space for additional bays. A cost for additional bays is included in the price list. This cost is based on a proration of the portion of the support structure; cable racking, lighting and grounding facilities needed to support the collocation area.

Cell: A162
Comment: Power Feed-Additional
Nonrecurring One Time Charge
This charge is for the DC power cable feeds from the CLEC equipment to the Battery Distribution Frame Board (i.e. BDFB) or Power Board, where the cable terminates. The power cable element included costs for the cables and the lugs, fuses and Htaps required to connect the cables to the power network. All costs of installing the cables are also included in the costs. These cables are attached directly to the CLEC's equipment and are dedicated exclusively for the use of the CLEC. One feed element consists of an A and B or original and backup feed. Each feed consists of two cables, four for the combined A & B feed. Power feeds can be purchased in the following sizes for the various types of collocation:

Size of Power Feed Type of Collocation

20 AMP Available for all types of Collocation
30 AMP Available for all types of Collocation
40 AMP Available for all types of Collocation
60 AMP Available for all types of Collocation
100 AMP Available for all types of Collocation
200 AMP Available for all types of Collocation
300 AMP Available for all types of Collocation
400 AMP Available for all types of Collocation

The costs for power feeds varies between the types of collocation (i. e. caged and cageless) due to the differences in the average distance between the CLEC space and the BDFB or power board.

Recurring Monthly Charge
There is also a small recurring charge for the maintenance of the power feeds.

Cell: A182
Comment: 1.7.9 Space Rent
The monthly rent for the leased physical space, without -48 Volt DC Power. The base rent rate element includes one 110 AC, 15 AMP electrical outlet provided in accordance with local codes and may not be used to power transmission equipment or -48 Volt D

Cell: A186
Comment: 1.7.1 Quotation Preparation Fee
The non-recurring cost for preparing a price quotation to a collocator for collocation

Cell: A189
Comment: Space Construction-Caged collocation
3.1 Standard Space Construction Charge
In addition to the facilities listed under Space Construction - General, the standard cageless collocation space construction charge includes the cost of constructing the cage. Cages are offered in standard 100, 200, 300 and 400 square feet increments. Nonstandard cage designs will be charged at the next highest increment. The standard caged collocation rate does no include DC power feeds. DC Power Feeds are priced separately by amperage. In caged collocation the grounding cable is offered as a separate element so the cost of the ground cable is not included in the standard price. A CLEC has the option of ordering large power feeds for their caged collocation area. The larger power feeds the greater the size of the facilities required to ground the equipment. To accommodate these variances in the size of the ground wire that is required, a separate grounding element has been developed for caged collocation builds.

Cell: A200
Comment: Power Feed-Variations to the Standard 60 AMP Feed Design
The standard caged collocation rate includes the provisioning of one 60 AMP power feed. A CLEC can request a power feed to their caged collocation space at 20, 30, 40, 60, 100, 200, 300 and 400 AMPS. USWEST has calculated cost based adjustments to the standard design price to facilitate pricing for power feed orders that vary from the standard 60 AMP design. For CLECs that order a 20, 30 or 40 AMP power feeds the standard price is reduced to reflect the lower cost of these power feeds. The ordering of 100, 200, 300, and 400 AMP power feeds would increase the standard space construction charge. These cost based adjustments to the standard design are included in the price list.

Cell: A231
Comment: 3.2 Grounding
Extends the building DC ground from the grounding plane of the central office to the CLEC's space.

Cell: A254
Comment: 4.1 Equipment Bay/Shelf

The Equipment Bay provides mounting space for the interconnector-designated shelves and fuse panel. Each Bay includes the 7 foot bay, its installation and all necessary environmental supports (e.g., floor space, heat and lighting). Mounting space on the bay, including space for the fuse panel and air gaps necessary for heat dissipation, is limited to 78 inches. Physical dimensions of the equipment bay are 84 inches high by 26 inches wide by 12 inches deep. Each bay is capable of providing space for six shelves. This element is for space for one shelf on the equipment bay.

Cell: A257
Comment: 4.2 Labor

- Equipment (Installation, Change, or Removal) - Labor - Equipment Labor is a charge associated with the installation, change or removal (i.e., discontinuance) of equipment. The Equipment Labor is a nonrecurring element based on the one half hour (1/2) during normal business hours or one half hour (1/2) outside normal business hours, as applicable.

- Equipment Maintenance - Labor - The Equipment Maintenance Labor rate element provides for the labor necessary to repair out-of-service and/or service-affecting conditions and preventative maintenance of the equipment as specified by the interconnector. The interconnector is responsible for ordering maintenance spares. Qwest will perform maintenance and/or repair work upon receipt of the replacement maintenance spare and/or equipment from the applicable interconnector. The equipment maintenance labor charge is a nonrecurring charge assessed per one half hour (1/2) or fraction thereof, per technician, during normal business hours or per one half hour (1/2) or fraction thereof, per technician, outside normal business hours, as applicable. A call-out of a maintenance technician outside normal business hours is subject to a minimum charge of four (4) hours. If the technician is required beyond the four hour minimum, the remaining time will be billed at the half-hour increment charge.

- Training -The Training element provides for the billing of vendor-provided training for Qwest personnel, on a metropolitan service area basis, necessary for interconnector-designated equipment (IDE) which is different from the Qwest-provided equipment. Qwest will require that three people be trained per metropolitan service area affected by the particular IDE. Within five business days of receiving the interconnector's request for service, Qwest will inform the interconnector of the number of employees requiring training. If, by an act of Qwest, the employees that have been trained are relocated, retired or are no longer available, Qwest will not require an interconnector to provide training for any new employees for the same IDE.

The Training element will only apply as required and will be determined utilizing two elements: the first will be the actual number of hours that the employee(s) is in training and the second is the actual training charges direct billed to Qwest (a copy of the invoice for the training course will be provided to the interconnector with the bill). The number of hours that the employee(s) is in training will be multiplied by the Labor rate element. The direct-billed training expenses will be billed to the interconnector in one half hour increments. The total direct-billed training expenses will be divided by the training element. The result of the division will be rounded to the nearest one-half hour increment.

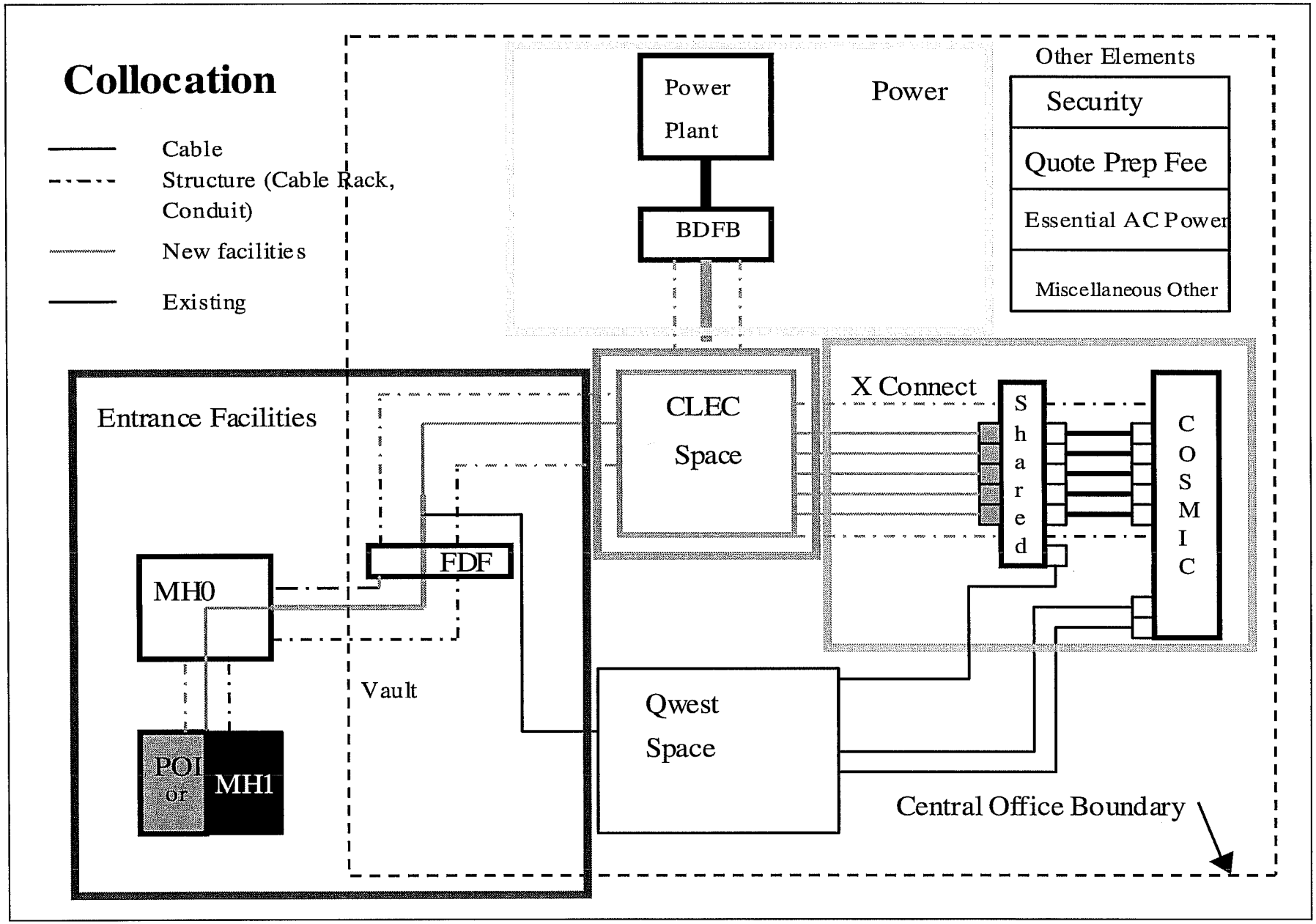
Collocation
Cable
Structure (Cable Rack, Conduit)
New facilities
Existing
Power Plant
BDFB
Power
Other Elements
Security
Quote Prep Fee
Essential AC Power
Miscellaneous Other
Entrance Facilities
CLEC Space
X Connect
Shared
COSMIC
FDF
MH0
Vault
POI or MH1
Qwest Space
Central Office Boundary

B. 1.1 Dev Total Prod Costs - S[illegible]ard Collocation Terminations

	Version 1.0 Created 6/3/02, 9:53:02 AM			1.1.2 Termination[illegible]0 Day Installation							
				DS0 - 90 Day Installation							
Row	South Dakota	Source or Calculation	Factor Value (sF)	DS0 Cable Placement per 100 Pair Block - 90 Day	DS0 Cable Placement per Termination - 90 Day	DS0 Cable per 100 Pair Block - 90 Day	DS0 Cable per Termination - 90 Day	DS0 Blocks per 100 Pair Block - 90 Day	DS0 Blocks per Termination - 90 Day	DS0 Block Placement per 100 Pair Block - 90 Day	DS0 Block Placement per Terminatio n - 90 Day
			A								
1	**Investment**	**sC p1-3 cE**									
2											
3	***Investment Based Costs (IBC)***	**sC p1-3 cK**									
4	***Element Specific Expenses***	**sE p1-2 cB-D**		158.2536	2.9697	239.6434	3.2828	415.0523	5.6856	165.6858	2.2697
5	***Total IBC + Element Specific Expenses***	***r3 + r4***		158.2536	2.9697	239.6434	3.2828	415.0523	5.6856	165.6858	2.2697
6											
7	***Marketing & Business Fees***										
8	Product Management Expense	cA*r5	0.01996	3.1583	0.0593	4.7826	0.0655	8.2833	0.1135	3.3066	0.0453
9	Sales Expense	cA*r5	0.01188	1.8796	0.0353	2.8463	0.0390	4.9297	0.0675	1.9679	0.0270
10	Product Advertising Expense	cA*r5	0.00000	0.0000	0.0000	0.0000	0.0000	0.0000	0.0000	0.0000	0.0000
11	Business Fees (Other Operating Taxes)	cA*(r5+r8:r10)	0.00148	0.2422	0.0045	0.3667	0.0050	0.6352	0.0087	0.2536	0.0035
12	***Marketing & Business Fees Total***	***Sum r8:r11***		5.2801	0.0991	7.9957	0.1095	13.8481	0.1897	5.5281	0.0757
13											
14	***Sub-Total Expenses***	***r5 + r12***		163.5337	3.0688	247.6390	3.3923	428.9005	5.8753	171.2138	2.3454
15											
16	***Other Direct Expenses***										
17	Network Operations	cA*r14	0.03483	5.6962	0.1069	8.6257	0.1182	14.9394	0.2046	5.9637	0.0817
18	Network Support Assets	cA*r14	0.01470	2.4045	0.0451	3.6412	0.0499	6.3063	0.0864	2.5174	0.0345
19	General Support Assets	cA*r14	0.08874	14.5123	0.2723	21.9760	0.3010	38.0616	0.5214	15.1939	0.2081
20	General Purpose Computers	cA*r14	0.04334	7.0879	0.1330	10.7332	0.1470	18.5895	0.2547	7.4208	0.1017
21	Uncollectible - Interconnect	cA*r14	0.00379	0.6191	0.0116	0.9375	0.0128	1.6238	0.0222	0.6482	0.0089
22	Accounting and Finance Expense	cA*r14	0.00735	1.2013	0.0225	1.8191	0.0249	3.1506	0.0432	1.2577	0.0172
23	Human Resources Expense	cA*r14	0.00829	1.3563	0.0255	2.0538	0.0281	3.5572	0.0487	1.4200	0.0195
24	Information Management Expense	cA*r14	0.07089	11.5924	0.2175	17.5544	0.2405	30.4034	0.4165	12.1368	0.1663
25	Intangibles	cA*r14	0.00000	0.0000	0.0000	0.0000	0.0000	0.0000	0.0000	0.0000	0.0000
26	***Total Other Direct Expenses***	***Sum r17:r25***		44.4700	0.8345	67.3409	0.9225	116.6317	1.5977	46.5585	0.6378
27											
28	***Total Element Long Run Incremental Co***	***r 14 + r26***		208.0038	3.9032	314.9800	4.3148	545.5322	7.4730	217.7724	2.9832
29											
30	***Common***										
31	Executive Expense	cA*r28	0.01127	2.3437	0.0440	3.5490	0.0486	6.1468	0.0842	2.4537	0.0336
32	Planning Expense	cA*r28	0.00053	0.1093	0.0021	0.1655	0.0023	0.2866	0.0039	0.1144	0.0016
33	External Relations Expense	cA*r28	0.03785	7.8721	0.1477	11.9208	0.1633	20.6463	0.2828	8.2418	0.1129
34	Legal Expense	cA*r28	0.00472	0.9812	0.0184	1.4859	0.0204	2.5735	0.0353	1.0273	0.0141
35	Other Procurement Expense	cA*r28	0.00186	0.3868	0.0073	0.5857	0.0080	1.0144	0.0139	0.4050	0.0055
36	Research and Development Expense	cA*r28	0.00001	0.0012	0.0000	0.0019	0.0000	0.0032	0.0000	0.0013	0.0000
37	Other General and Admin Exp	cA*r28	0.01506	3.1333	0.0588	4.7448	0.0650	8.2178	0.1126	3.2805	0.0449
38	***Total Common Costs***	***Sum r31:r37***		14.8277	0.2782	22.4535	0.3076	38.8885	0.5327	15.5240	0.2127
39											
40	***TELRIC + Common***	***r28 + r38***		**222.83**	**4.18**	**337.43**	**4.62**	**584.42**	**8.01**	**233.30**	**3.20**

c = column, r = row, s = section, p = page

B. 1.1 Dev Total Prod Costs - S[illegible]rd Collocation Terminations

	Version 1.0 Created 6/3/02, 9:53:02 AM									
				DS1 - 90 Day Installation						
Row	South Dakota	Source or Calculation	Factor Value (sF)	DS1 Cable Placement per 28 DS1s - 90 Day	DS1 Cable Placement per Termination - 90 Day	DS1 Cable per 28 DS1s - 90 Day	DS1 Cable per per Termination - 90 Day	DS1 Panel per 28 DS1s - 90 Day	DS1 Panel per Termination - 90 Day	DS1 Panel Placement per 28 DS1s - 90 Day	DS1 Panel Placement per Termination - 90 Day
			A								
1	**Investment**	**sC p1-3 cE**									
2											
3	***Investment Based Costs (IBC)***	**sC p1-3 cK**									
4	***Element Specific Expenses***	**sE p1-2 cB-D**		275.6688	29.6418	276.6284	29.7450	189.7615	22.7905	56.3537	6.0595
5	***Total IBC + Element Specific Expenses***	***r3 + r4***		275.6688	29.6418	276.6284	29.7450	189.7615	22.7905	56.3537	6.0595
6											
7	***Marketing & Business Fees***										
8	Product Management Expense	cA*r5	0.01996	5.5016	0.5916	5.5207	0.5936	3.7871	0.4548	1.1247	0.1209
9	Sales Expense	cA*r5	0.01188	3.2742	0.3521	3.2856	0.3533	2.2538	0.2707	0.6693	0.0720
10	Product Advertising Expense	cA*r5	0.00000	0.0000	0.0000	0.0000	0.0000	0.0000	0.0000	0.0000	0.0000
11	Business Fees (Other Operating Taxes)	cA*(r5+r8:r10)	0.00148	0.4219	0.0454	0.4233	0.0455	0.2904	0.0349	0.0862	0.0093
12	***Marketing & Business Fees Total***	***Sum r8:r11***		9.1976	0.9890	9.2297	0.9924	6.3314	0.7604	1.8802	0.2022
13											
14	***Sub-Total Expenses***	***r5 + r12***		284.8664	30.6308	285.8580	30.7374	196.0929	23.5509	58.2339	6.2617
15											
16	***Other Direct Expenses***										
17	Network Operations	cA*r14	0.03483	9.9224	1.0669	9.9570	1.0706	6.8303	0.8203	2.0284	0.2181
18	Network Support Assets	cA*r14	0.01470	4.1885	0.4504	4.2031	0.4519	2.8832	0.3463	0.8562	0.0921
19	General Support Assets	cA*r14	0.08874	25.2797	2.7182	25.3677	2.7277	17.4017	2.0900	5.1678	0.5557
20	General Purpose Computers	cA*r14	0.04334	12.3467	1.3276	12.3897	1.3322	8.4991	1.0207	2.5240	0.2714
21	Uncollectible - Interconnect	cA*r14	0.00379	1.0785	0.1160	1.0822	0.1164	0.7424	0.0892	0.2205	0.0237
22	*Accounting and Finance Expense*	cA*r14	0.00735	2.0926	0.2250	2.0998	0.2258	1.4405	0.1730	0.4278	0.0460
23	Human Resources Expense	cA*r14	0.00829	2.3626	0.2540	2.3708	0.2549	1.6263	0.1953	0.4830	0.0519
24	Information Management Expense	cA*r14	0.07089	20.1933	2.1713	20.2636	2.1789	13.9004	1.6694	4.1280	0.4439
25	Intangibles	cA*r14	0.00000	0.0000	0.0000	0.0000	0.0000	0.0000	0.0000	0.0000	0.0000
26	***Total Other Direct Expenses***	***Sum r17:r25***		77.4643	8.3295	77.7339	8.3585	53.3239	6.4042	15.8356	1.7028
27											
28	***Total Element Long Run Incremental Co***	***r 14 + r26***		362.3307	38.9603	363.5919	39.0959	249.4168	29.9551	74.0695	7.9645
29											
30	***Common***										
31	Executive Expense	cA*r28	0.01127	4.0826	0.4390	4.0968	0.4405	2.8103	0.3375	0.8346	0.0897
32	Planning Expense	cA*r28	0.00053	0.1903	0.0205	0.1910	0.0205	0.1310	0.0157	0.0389	0.0042
33	External Relations Expense	cA*r28	0.03785	13.7128	1.4745	13.7605	1.4796	9.4395	1.1337	2.8032	0.3014
34	Legal Expense	cA*r28	0.00472	1.7093	0.1838	1.7152	0.1844	1.1766	0.1413	0.3494	0.0376
35	Other Procurement Expense	cA*r28	0.00186	0.6738	0.0724	0.6761	0.0727	0.4638	0.0557	0.1377	0.0148
36	Research and Development Expense	cA*r28	0.00001	0.0021	0.0002	0.0021	0.0002	0.0015	0.0002	0.0004	0.0000
37	Other General and Admin Exp	cA*r28	0.01506	5.4581	0.5869	5.4771	0.5889	3.7572	0.4512	1.1158	0.1200
38	***Total Common Costs***	***Sum r31:r37***		25.8289	2.7773	25.9188	2.7870	17.7798	2.1354	5.2801	0.5678
39											
40	***TELRIC + Common***	***r28 + r38***		**388.16**	**41.74**	**389.51**	**41.88**	**267.20**	**32.09**	**79.35**	**8.53**

c = column, r = row, s = section, p = page

B. 1.1 Dev Total Prod Costs - S[illegible]ard Collocation Terminations

	Version 1.0 Created 6/3/02, 9:53:02 AM			DS3 - 90 Day Installation			
Row	South Dakota	Source or Calculation	Factor Value (sF)	DS3 Cable Placement per Termination - 90 Day	DS3 Cable per Termination - 90 Day	DS3 Connector per Termination - 90 Day	DS3 Connector Placement per Termination - 90 Day
			A				
1	**Investment**	**sC p1-3 cE**					
2							
3	***Investment Based Costs (IBC)***	**sC p1-3 cK**					
4	***Element Specific Expenses***	**sE p1-2 cB-D**		102.1146	178.6328	181.6190	14.0770
5	***Total IBC + Element Specific Expenses***	***r3 + r4***		102.1146	178.6328	181.6190	14.0770
6							
7	***Marketing & Business Fees***						
8	Product Management Expense	cA*r5	0.01996	2.0379	3.5650	3.6246	0.2809
9	Sales Expense	cA*r5	0.01188	1.2128	2.1217	2.1571	0.1672
10	Product Advertising Expense	cA*r5	0.00000	0.0000	0.0000	0.0000	0.0000
11	Business Fees (Other Operating Taxes)	cA*(r5+r8:r10)	0.00148	0.1563	0.2734	0.2779	0.0215
12	***Marketing & Business Fees Total***	***Sum r8:r11***		3.4070	5.9600	6.0597	0.4697
13							
14	***Sub-Total Expenses***	***r5 + r12***		105.5216	184.5928	187.6787	14.5466
15							
16	***Other Direct Expenses***						
17	Network Operations	cA*r14	0.03483	3.6755	6.4297	6.5372	0.5067
18	Network Support Assets	cA*r14	0.01470	1.5515	2.7142	2.7595	0.2139
19	General Support Assets	cA*r14	0.08874	9.3642	16.3812	16.6550	1.2909
20	General Purpose Computers	cA*r14	0.04334	4.5735	8.0006	8.1344	0.6305
21	Uncollectible - Interconnect	cA*r14	0.00379	0.3995	0.6989	0.7105	0.0551
22	Accounting and Finance Expense	cA*r14	0.00735	0.7751	1.3560	1.3786	0.1069
23	Human Resources Expense	cA*r14	0.00829	0.8752	1.5310	1.5565	0.1206
24	Information Management Expense	cA*r14	0.07089	7.4801	13.0852	13.3040	1.0312
25	Intangibles	cA*r14	0.00000	0.0000	0.0000	0.0000	0.0000
26	***Total Other Direct Expenses***	***Sum r17:r25***		28.6947	50.1967	51.0358	3.9557
27							
28	***Total Element Long Run Incremental Co***	***r 14 + r26***		134.2163	234.7895	238.7145	18.5023
29							
30	***Common***						
31	Executive Expense	cA*r28	0.01127	1.5123	2.6455	2.6897	0.2085
32	Planning Expense	cA*r28	0.00053	0.0705	0.1233	0.1254	0.0097
33	External Relations Expense	cA*r28	0.03785	5.0796	8.8859	9.0344	0.7002
34	Legal Expense	cA*r28	0.00472	0.6331	1.1076	1.1261	0.0873
35	Other Procurement Expense	cA*r28	0.00186	0.2496	0.4366	0.4439	0.0344
36	Research and Development Expense	cA*r28	0.00001	0.0008	0.0014	0.0014	0.0001
37	Other General and Admin Exp	cA*r28	0.01506	2.0218	3.5368	3.5960	0.2787
38	***Total Common Costs***	***Sum r31:r37***		9.5677	16.7371	17.0169	1.3189
39							
40	***TELRIC + Common***	***r28 + r38***		**143.78**	**251.53**	**255.73**	**19.82**

c = column, r = row, s = section, p = page

B. 1.1 Dev Total Prod Costs - S[illegible]ard Collocation Terminations

	Version 1.0 Created 6/3/02, 9:53:02 AM			1.1.3 Termination Monthly Charge							
				DS0 - Monthly Charge							
Row	South Dakota	Source or Calculation	Factor Value (sF)	DS0 Cable Placement per 100 pair per month	DS0 Cable Placement per Termination per month	DS0 Cable per 100 pair per month	DS0 Cable per Termination per month	DS0 Blocks per 100 pair per month	DS0 Blocks per Termination per month	DS0 Block Placement per 100 pair per month	DS0 Block Placement per Termination per month
			A								
1	**Investment**	**sC p1-3 cE**									
2											
3	***Investment Based Costs (IBC)***	**sC p1-3 cK**									
4	***Element Specific Expenses***	**sE p1-2 cB-D**		0.0890	0.0017	0.1348	0.0018	0.2335	0.0032	0.0932	0.0013
5	***Total IBC + Element Specific Expenses***	***r3 + r4***		0.0890	0.0017	0.1348	0.0018	0.2335	0.0032	0.0932	0.0013
6											
7	***Marketing & Business Fees***										
8	Product Management Expense	cA*r5	0.01996	0.0018	0.0000	0.0027	0.0000	0.0047	0.0001	0.0019	0.0000
9	Sales Expense	cA*r5	0.01188	0.0011	0.0000	0.0016	0.0000	0.0028	0.0000	0.0011	0.0000
10	Product Advertising Expense	cA*r5	0.00000	0.0000	0.0000	0.0000	0.0000	0.0000	0.0000	0.0000	0.0000
11	Business Fees (Other Operating Taxes)	cA*(r5+r8:r10)	0.00148	0.0001	0.0000	0.0002	0.0000	0.0004	0.0000	0.0001	0.0000
12	***Marketing & Business Fees Total***	***Sum r8:r11***		0.0030	0.0001	0.0045	0.0001	0.0078	0.0001	0.0031	0.0000
13											
14	***Sub-Total Expenses***	***r5 + r12***		0.0920	0.0017	0.1393	0.0019	0.2413	0.0033	0.0963	0.0013
15											
16	***Other Direct Expenses***										
17	Network Operations	cA*r14	0.03483	0.0032	0.0001	0.0049	0.0001	0.0084	0.0001	0.0034	0.0000
18	Network Support Assets	cA*r14	0.01470	0.0014	0.0000	0.0020	0.0000	0.0035	0.0000	0.0014	0.0000
19	General Support Assets	cA*r14	0.08874	0.0082	0.0002	0.0124	0.0002	0.0214	0.0003	0.0085	0.0001
20	General Purpose Computers	cA*r14	0.04334	0.0040	0.0001	0.0060	0.0001	0.0105	0.0001	0.0042	0.0001
21	Uncollectible - Interconnect	cA*r14	0.00379	0.0003	0.0000	0.0005	0.0000	0.0009	0.0000	0.0004	0.0000
22	Accounting and Finance Expense	cA*r14	0.00735	0.0007	0.0000	0.0010	0.0000	0.0018	0.0000	0.0007	0.0000
23	Human Resources Expense	cA*r14	0.00829	0.0008	0.0000	0.0012	0.0000	0.0020	0.0000	0.0008	0.0000
24	Information Management Expense	cA*r14	0.07089	0.0065	0.0001	0.0099	0.0001	0.0171	0.0002	0.0068	0.0001
25	Intangibles	cA*r14	0.00000	0.0000	0.0000	0.0000	0.0000	0.0000	0.0000	0.0000	0.0000
26	***Total Other Direct Expenses***	***Sum r17:r25***		0.0250	0.0005	0.0379	0.0005	0.0656	0.0009	0.0262	0.0004
27											
28	***Total Element Long Run Incremental Co***	***r 14 + r26***		0.1170	0.0022	0.1772	0.0024	0.3069	0.0042	0.1225	0.0017
29											
30	***Common***										
31	Executive Expense	cA*r28	0.01127	0.0013	0.0000	0.0020	0.0000	0.0035	0.0000	0.0014	0.0000
32	Planning Expense	cA*r28	0.00053	0.0001	0.0000	0.0001	0.0000	0.0002	0.0000	0.0001	0.0000
33	External Relations Expense	cA*r28	0.03785	0.0044	0.0001	0.0067	0.0001	0.0116	0.0002	0.0046	0.0001
34	Legal Expense	cA*r28	0.00472	0.0006	0.0000	0.0008	0.0000	0.0014	0.0000	0.0006	0.0000
35	Other Procurement Expense	cA*r28	0.00186	0.0002	0.0000	0.0003	0.0000	0.0006	0.0000	0.0002	0.0000
36	Research and Development Expense	cA*r28	0.00001	0.0000	0.0000	0.0000	0.0000	0.0000	0.0000	0.0000	0.0000
37	Other General and Admin Exp	cA*r28	0.01506	0.0018	0.0000	0.0027	0.0000	0.0046	0.0001	0.0018	0.0000
38	***Total Common Costs***	***Sum r31:r37***		0.0083	0.0002	0.0126	0.0002	0.0219	0.0003	0.0087	0.0001
39											
40	***TELRIC + Common***	***r28 + r38***		**0.1254**	**0.0024**	**0.1899**	**0.0026**	**0.3288**	**0.0045**	**0.1313**	**0.0018**

c = column, r = row, s = section, p = page

B. 1.1 Dev Total Prod Costs - S[illegible]rd Collocation Terminations

	[illegible]on 1.0 Created 6/3/02, 9:53:02 AM			DS1 - Monthly Charge							
Row	South Dakota	Source or Calculation	Factor Value (sF)	DS1 Cable Placement per 28 DS1s per month	DS1 Cable Placement per Termination per month	DS1 Cable per 28 DS1s per month	DS1 Cable per per Termination per month	DS1 Panel per 28 DS1s per month	DS1 Panel per Termination per month	DS1 Panel Placement per 28 DS1s per month	DS1 Panel Placement per Termination per month
			A								
1	**Investment**	**sC p1-3 cE**									
2											
3	***Investment Based Costs (IBC)***	**sC p1-3 cK**									
4	***Element Specific Expenses***	**sE p1-2 cB-D**		0.5105	0.0549	0.5123	0.0551	0.3514	0.0422	0.1044	0.0112
5	***Total IBC + Element Specific Expenses***	***r3 + r4***		0.5105	0.0549	0.5123	0.0551	0.3514	0.0422	0.1044	0.0112
6											
7	***Marketing & Business Fees***										
8	Product Management Expense	cA*r5	0.01996	0.0102	0.0011	0.0102	0.0011	0.0070	0.0008	0.0021	0.0002
9	Sales Expense	cA*r5	0.01188	0.0061	0.0007	0.0061	0.0007	0.0042	0.0005	0.0012	0.0001
10	Product Advertising Expense	cA*r5	0.00000	0.0000	0.0000	0.0000	0.0000	0.0000	0.0000	0.0000	0.0000
11	Business Fees (Other Operating Taxes)	cA*(r5+r8:r10)	0.00148	0.0008	0.0001	0.0008	0.0001	0.0005	0.0001	0.0002	0.0000
12	***Marketing & Business Fees Total***	***Sum r8:r11***		0.0170	0.0018	0.0171	0.0018	0.0117	0.0014	0.0035	0.0004
13											
14	***Sub-Total Expenses***	***r5 + r12***		0.5276	0.0567	0.5294	0.0569	0.3632	0.0436	0.1078	0.0116
15											
16	***Other Direct Expenses***										
17	Network Operations	cA*r14	0.03483	0.0184	0.0020	0.0184	0.0020	0.0126	0.0015	0.0038	0.0004
18	Network Support Assets	cA*r14	0.01470	0.0078	0.0008	0.0078	0.0008	0.0053	0.0006	0.0016	0.0002
19	General Support Assets	cA*r14	0.08874	0.0468	0.0050	0.0470	0.0051	0.0322	0.0039	0.0096	0.0010
20	General Purpose Computers	cA*r14	0.04334	0.0229	0.0025	0.0229	0.0025	0.0157	0.0019	0.0047	0.0005
21	Uncollectible - Interconnect	cA*r14	0.00379	0.0020	0.0002	0.0020	0.0002	0.0014	0.0002	0.0004	0.0000
22	Accounting and Finance Expense	cA*r14	0.00735	0.0039	0.0004	0.0039	0.0004	0.0027	0.0003	0.0008	0.0001
23	Human Resources Expense	cA*r14	0.00829	0.0044	0.0005	0.0044	0.0005	0.0030	0.0004	0.0009	0.0001
24	Information Management Expense	cA*r14	0.07089	0.0374	0.0040	0.0375	0.0040	0.0257	0.0031	0.0076	0.0008
25	Intangibles	cA*r14	0.00000	0.0000	0.0000	0.0000	0.0000	0.0000	0.0000	0.0000	0.0000
26	***Total Other Direct Expenses***	***Sum r17:r25***		0.1435	0.0154	0.1440	0.0155	0.0988	0.0119	0.0293	0.0032
27											
28	***Total Element Long Run Incremental Co***	***r 14 + r26***		0.6710	0.0722	0.6734	0.0724	0.4619	0.0555	0.1372	0.0148
29											
30	***Common***										
31	Executive Expense	cA*r28	0.01127	0.0076	0.0008	0.0076	0.0008	0.0052	0.0006	0.0015	0.0002
32	Planning Expense	cA*r28	0.00053	0.0004	0.0000	0.0004	0.0000	0.0002	0.0000	0.0001	0.0000
33	External Relations Expense	cA*r28	0.03785	0.0254	0.0027	0.0255	0.0027	0.0175	0.0021	0.0052	0.0006
34	Legal Expense	cA*r28	0.00472	0.0032	0.0003	0.0032	0.0003	0.0022	0.0003	0.0006	0.0001
35	Other Procurement Expense	cA*r28	0.00186	0.0012	0.0001	0.0013	0.0001	0.0009	0.0001	0.0003	0.0000
36	Research and Development Expense	cA*r28	0.00001	0.0000	0.0000	0.0000	0.0000	0.0000	0.0000	0.0000	0.0000
37	Other General and Admin Exp	cA*r28	0.01506	0.0101	0.0011	0.0101	0.0011	0.0070	0.0008	0.0021	0.0002
38	***Total Common Costs***	***Sum r31:r37***		0.0478	0.0051	0.0480	0.0052	0.0329	0.0040	0.0098	0.0011
39											
40	***TELRIC + Common***	***r28 + r38***		**0.7189**	**0.0773**	**0.7214**	**0.0776**	**0.4948**	**0.0594**	**0.1470**	**0.0158**

c = column, r = row, s = section, p = page

B. 1.1 Dev Total Prod Costs - S rd Collocation Terminations

	Version 1.0 Created 6/3/02, 9:53:02 AM						
				DS3 - Monthly Charge			
Row	South Dakota	Source or Calculation	Factor Value (sF)	DS3 Cable Placement per Termination per month	DS3 Cable per Termination per month	DS3 Connector per Termination per month	DS3 Connector Placement per Termination per month
			A				
1	**Investment**	**sC p1-3 cE**					
2							
3	***Investment Based Costs (IBC)***	**sC p1-3 cK**					
4	***Element Specific Expenses***	**sE p1-2 cB-D**		0.1891	0.3308	0.3364	0.0261
5	***Total IBC + Element Specific Expenses***	***r3 + r4***		0.1891	0.3308	0.3364	0.0261
6							
7	***Marketing & Business Fees***						
8	Product Management Expense	cA*r5	0.01996	0.0038	0.0066	0.0067	0.0005
9	Sales Expense	cA*r5	0.01188	0.0022	0.0039	0.0040	0.0003
10	Product Advertising Expense	cA*r5	0.00000	0.0000	0.0000	0.0000	0.0000
11	Business Fees (Other Operating Taxes)	cA*(r5+r8:r10)	0.00148	0.0003	0.0005	0.0005	0.0000
12	***Marketing & Business Fees Total***	***Sum r8:r11***		0.0063	0.0110	0.0112	0.0009
13							
14	***Sub-Total Expenses***	***r5 + r12***		0.1954	0.3419	0.3476	0.0269
15							
16	***Other Direct Expenses***						
17	Network Operations	cA*r14	0.03483	0.0068	0.0119	0.0121	0.0009
18	Network Support Assets	cA*r14	0.01470	0.0029	0.0050	0.0051	0.0004
19	General Support Assets	cA*r14	0.08874	0.0173	0.0303	0.0308	0.0024
20	General Purpose Computers	cA*r14	0.04334	0.0085	0.0148	0.0151	0.0012
21	Uncollectible - Interconnect	cA*r14	0.00379	0.0007	0.0013	0.0013	0.0001
22	Accounting and Finance Expense	cA*r14	0.00735	0.0014	0.0025	0.0026	0.0002
23	Human Resources Expense	cA*r14	0.00829	0.0016	0.0028	0.0029	0.0002
24	Information Management Expense	cA*r14	0.07089	0.0139	0.0242	0.0246	0.0019
25	Intangibles	cA*r14	0.00000	0.0000	0.0000	0.0000	0.0000
26	***Total Other Direct Expenses***	***Sum r17:r25***		0.0531	0.0930	0.0945	0.0073
27							
28	***Total Element Long Run Incremental Co***	***r 14 + r26***		0.2486	0.4348	0.4421	0.0343
29							
30	***Common***						
31	Executive Expense	cA*r28	0.01127	0.0028	0.0049	0.0050	0.0004
32	Planning Expense	cA*r28	0.00053	0.0001	0.0002	0.0002	0.0000
33	External Relations Expense	cA*r28	0.03785	0.0094	0.0165	0.0167	0.0013
34	Legal Expense	cA*r28	0.00472	0.0012	0.0021	0.0021	0.0002
35	Other Procurement Expense	cA*r28	0.00186	0.0005	0.0008	0.0008	0.0001
36	Research and Development Expense	cA*r28	0.00001	0.0000	0.0000	0.0000	0.0000
37	Other General and Admin Exp	cA*r28	0.01506	0.0037	0.0066	0.0067	0.0005
38	***Total Common Costs***	***Sum r31:r37***		0.0177	0.0310	0.0315	0.0024
39							
40	***TELRIC + Common***	***r28 + r38***		**0.2663**	**0.4658**	**0.4736**	**0.0367**

c = column, r = row, s = section, p = page

B. 1.2-1.3 Dev Total Prod Costs - Standard C[illegible]ation Entrance Facility and Cable Splicing

	Version 1.[illegible]ated 6/3/02, 9:53:02 AM			1.2 Entrance Facility						1.3 Cable Splicing - S[illegible] Installation	
				1.2.1 Entrance Facility - 90 Day Installation			1.2.2 Entrance Facility - Monthly Charge				
Row	South Dakota	Source or Calculation	Factor Value (sF)	Standard Shared Per Fiber	Cross Connect per Fiber	Express per Cable	Standard Shared Per Fiber per month	Cross Connect per Fiber per month	Express per Cable per month	Setup	Per fiber Spliced
			A								
1	**Investment**	**sC p1-3 cE**					385.00	385.00	6741.33		
2											
3	***Investment Based Costs (IBC)***	**sC p1-3 cK**					4.1840	4.1840	73.3114		
4	***Element Specific Expenses***	**sE p3 cC&E Sum of Accts**		473.4753	555.3299	6918.2040	0.6494	0.8009	4.1772	363.4016	27.5000
5	***Total IBC + Element Specific Expenses***	***r3 + r4***		473.4753	555.3299	6918.2040	4.8333	4.9849	77.4886	363.4016	27.5000
6											
7	***Marketing & Business Fees***										
8	Product Management Expense	cA*r5	0.01996	9.4492	11.0828	138.0681	0.0965	0.0995	1.5465	7.2525	0.5488
9	Sales Expense	cA*r5	0.01188	5.6236	6.5958	82.1693	0.0574	0.0592	0.9204	4.3162	0.3266
10	Product Advertising Expense	cA*r5	0.00000	0.0000	0.0000	0.0000	0.0000	0.0000	0.0000	0.0000	0.0000
11	Business Fees (Other Operating Taxes)	cA*(r5+r8:r10)	0.00148	0.7246	0.8498	10.5872	0.0074	0.0076	0.1186	0.5561	0.0421
12	***Marketing & Business Fees Total***	***Sum r8:r11***		15.7974	18.5285	230.8245	0.1613	0.1663	2.5854	12.1248	0.9175
13											
14	***Sub-Total Expenses***	***r5 + r12***		489.2727	573.8583	7149.0286	4.9946	5.1512	80.0740	375.5264	28.4175
15											
16	***Other Direct Expenses***										
17	Network Operations	cA*r14	0.03483	17.0423	19.9885	249.0136	0.1740	0.1794	2.7891	13.0803	0.9898
18	Network Support Assets	cA*r14	0.01470	7.1940	8.4377	105.1156	0.0734	0.0757	1.1774	5.5215	0.4178
19	General Support Assets	cA*r14	0.08874	43.4191	50.9254	634.4202	0.4432	0.4571	7.1059	33.3250	2.5218
20	General Purpose Computers	cA*r14	0.04334	21.2061	24.8722	309.8541	0.2165	0.2233	3.4706	16.2761	1.2317
21	Uncollectible - Interconnect	cA*r14	0.00379	1.8524	2.1726	27.0658	0.0189	0.0195	0.3032	1.4217	0.1076
22	Accounting and Finance Expense	cA*r14	0.00735	3.5941	4.2154	52.5152	0.0367	0.0378	0.5882	2.7585	0.2087
23	Human Resources Expense	cA*r14	0.00829	4.0579	4.7594	59.2918	0.0414	0.0427	0.6641	3.1145	0.2357
24	Information Management Expense	cA*r14	0.07089	34.6830	40.6790	506.7724	0.3541	0.3652	5.6762	26.6199	2.0144
25	Intangibles	cA*r14	0.00000	0.0000	0.0000	0.0000	0.0000	0.0000	0.0000	0.0000	0.0000
26	***Total Other Direct Expenses***	***Sum r17:r25***		133.0488	156.0504	1944.0487	1.3582	1.4008	21.7747	102.1176	7.7276
27											
28	***Total Element Long Run Incremental Cc***	***r 14 + r26***		622.3215	729.9087	9093.0773	6.3528	6.5520	101.8486	477.6440	36.1452
29											
30	***Common***										
31	Executive Expense	cA*r28	0.01127	7.0120	8.2242	102.4561	0.0716	0.0738	1.1476	5.3818	0.4073
32	Planning Expense	cA*r28	0.00053	0.3269	0.3835	4.7770	0.0033	0.0034	0.0535	0.2509	0.0190
33	External Relations Expense	cA*r28	0.03785	23.5524	27.6242	344.1375	0.2404	0.2480	3.8546	18.0770	1.3680
34	Legal Expense	cA*r28	0.00472	2.9357	3.4433	42.8955	0.0300	0.0309	0.4805	2.2532	0.1705
35	Other Procurement Expense	cA*r28	0.00186	1.1572	1.3573	16.9087	0.0118	0.0122	0.1894	0.8882	0.0672
36	Research and Development Expense	cA*r28	0.00001	0.0037	0.0043	0.0534	0.0000	0.0000	0.0006	0.0028	0.0002
37	Other General and Admin Exp	cA*r28	0.01506	9.3745	10.9952	136.9765	0.0957	0.0987	1.5342	7.1951	0.5445
38	***Total Common Costs***	***Sum r31:r37***		44.3625	52.0319	648.2047	0.4529	0.4671	7.2603	34.0491	2.5766
39											
40	***TELRIC + Common***	***r28 + r38***		**666.68**	**781.94**	**9741.28**	**6.81**	**7.02**	**109.11**	**511.69**	**38.72**

c = column, r = row, s = section, p = page

B. 1.4 Dev Total Prod Costs - S[illegible]rd Collocation Power Usage

	Vers[illegible].0 Created 6/3/02, 9:53:02 AM			1.4.1 Power Plant per Amp Ordered				1.4.2 Backup AC Power Feed Usage - Monthly Charges					
Row	South Dakota	Source or Calculation	Factor Value (sF)	Power Plant per Amp Ordered Less than 60 AMPS	Power Plant per Amp Ordered Equal to or Greater than 60 Amps	Power Usage-Less than 60 AMPS per Amp Ordered	Power Usage-More than 60 AMPS per Amp Ordered	120 V per Amp per Month	208 V, Single Phase per Amp per Month	208 V, Three Phase per Amp per Month	240 V, Single Phase per Amp per Month	240 V, Three Phase per Amp per Month	480 V, Three Phase per Amp per Month
			A										
1	**Investment**	**sC p1-3 cE**		539.47	420.31			361.51	626.62	1084.06	723.03	1250.83	2501.67
2													
3	***Investment Based Costs (IBC)***	**sC p1-3 cK**		8.8979	6.9325			5.9627	10.335344	17.880145	11.9254	20.6309	41.2619
4	***Element Specific Expenses***	**sE p3-4 cC-E**				1.6125	3.2249	8.4359	14.6222	25.2963	16.8717	29.1881	58.3762
5	***Total IBC + Element Specific Expenses***	***r3 + r4***		8.8979	6.9325	1.6125	3.2249	14.3986	24.9575	43.1765	28.7971	49.8190	99.6380
6													
7	***Marketing & Business Fees***												
8	Product Management Expense	cA*r5	0.01996	0.1776	0.1384	0.0322	0.0644	0.2874	0.4981	0.8617	0.5747	0.9942	1.9885
9	Sales Expense	cA*r5	0.01188	0.1057	0.0823	0.0192	0.0383	0.1710	0.2964	0.5128	0.3420	0.5917	1.1834
10	Product Advertising Expense	cA*r5	0.00000	0.0000	0.0000	0.0000	0.0000	0.0000	0.0000	0.0000	0.0000	0.0000	0.0000
11	Business Fees (Other Operating Taxes)	cA*(r5+r8:r10)	0.00148	0.0136	0.0106	0.0025	0.0049	0.0220	0.0382	0.0661	0.0441	0.0762	0.1525
12	***Marketing & Business Fees Total***	***Sum r8:r11***		0.2969	0.2313	0.0538	0.1076	0.4804	0.8327	1.4406	0.9608	1.6622	3.3244
13													
14	***Sub-Total Expenses***	***r5 + r12***		9.1948	7.1638	1.6663	3.3325	14.8790	25.7902	44.6171	29.7579	51.4812	102.9625
15													
16	***Other Direct Expenses***												
17	Network Operations	cA*r14	0.03483	0.3203	0.2495	0.0580	0.1161	0.5183	0.8983	1.5541	1.0365	1.7932	3.5864
18	Network Support Assets	cA*r14	0.01470	0.1352	0.1053	0.0245	0.0490	0.2188	0.3792	0.6560	0.4375	0.7570	1.5139
19	General Support Assets	cA*r14	0.08874	0.8160	0.6357	0.1479	0.2957	1.3204	2.2887	3.9594	2.6408	4.5686	9.1371
20	General Purpose Computers	cA*r14	0.04334	0.3985	0.3105	0.0722	0.1444	0.6449	1.1178	1.9338	1.2898	2.2313	4.4626
21	Uncollectible - Interconnect	cA*r14	0.00379	0.0348	0.0271	0.0063	0.0126	0.0563	0.0976	0.1689	0.1127	0.1949	0.3898
22	Accounting and Finance Expense	cA*r14	0.00735	0.0675	0.0526	0.0122	0.0245	0.1093	0.1894	0.3277	0.2186	0.3782	0.7563
23	Human Resources Expense	cA*r14	0.00829	0.0763	0.0594	0.0138	0.0276	0.1234	0.2139	0.3700	0.2468	0.4270	0.8539
24	Information Management Expense	cA*r14	0.07089	0.6518	0.5078	0.1181	0.2362	1.0547	1.8282	3.1628	2.1094	3.6493	7.2987
25	Intangibles	cA*r14	0.00000	0.0000	0.0000	0.0000	0.0000	0.0000	0.0000	0.0000	0.0000	0.0000	0.0000
26	***Total Other Direct Expenses***	***Sum r17:r25***		2.5004	1.9481	0.4531	0.9062	4.0461	7.0132	12.1328	8.0921	13.9994	27.9988
27													
28	***Total Element Long Run Incremental Co***	***r 14 + r26***		11.6952	9.1119	2.1194	4.2387	18.9250	32.8034	56.7499	37.8501	65.4806	130.9612
29													
30	***Common***												
31	Executive Expense	cA*r28	0.01127	0.1318	0.1027	0.0239	0.0478	0.2132	0.3696	0.6394	0.4265	0.7378	1.4756
32	Planning Expense	cA*r28	0.00053	0.0061	0.0048	0.0011	0.0022	0.0099	0.0172	0.0298	0.0199	0.0344	0.0688
33	External Relations Expense	cA*r28	0.03785	0.4426	0.3448	0.0802	0.1604	0.7162	1.2415	2.1478	1.4325	2.4782	4.9564
34	Legal Expense	cA*r28	0.00472	0.0552	0.0430	0.0100	0.0200	0.0893	0.1547	0.2677	0.1786	0.3089	0.6178
35	Other Procurement Expense	cA*r28	0.00186	0.0217	0.0169	0.0039	0.0079	0.0352	0.0610	0.1055	0.0704	0.1218	0.2435
36	Research and Development Expense	cA*r28	0.00001	0.0001	0.0001	0.0000	0.0000	0.0001	0.0002	0.0003	0.0002	0.0004	0.0008
37	Other General and Admin Exp	cA*r28	0.01506	0.1762	0.1373	0.0319	0.0639	0.2851	0.4941	0.8549	0.5702	0.9864	1.9728
38	***Total Common Costs***	***Sum r31:r37***		0.8337	0.6495	0.1511	0.3022	1.3491	2.3384	4.0454	2.6982	4.6678	9.3356
39													
40	***TELRIC + Common***	***r28 + r38***		**12.5289**	**9.7614**	**2.2704**	**4.5409**	**20.274**	**35.142**	**60.795**	**40.548**	**70.148**	**140.297**

c = column, r = row, s = section, p = page

B. 1.4 Dev Total Prod Costs - S[illegible]rd Collocation Power Usage

	Version [illegible] reated 6/3/02, 9:53:02 AM			1.4.3 Backup AC Power Cable - 90 Day Installation											
Row	South Dakota	Source or Calculation	Factor Value (sF)	20 Amp, Single Phase - Initial Charge per Foot	20 Amp, Three Phase - Initial Charge per Foot	30 Amp, Single Phase - Initial Charge per Foot	30 Amp, Three Phase - Initial Charge per Foot	40 Amp, Single Phase - Initial Charge per Foot	40 Amp, Three Phase - Initial Charge per Foot	50 Amp, Single Phase - Initial Charge per Foot	50 Amp, Three Phase - Initial Charge per Foot	60 Amp, Single Phase - Initial Charge per Foot	60 Amp, Three Phase - Initial Charge per Foot	100 Amp, Single Phase - Initial Charge per Foot	100 Amp, Three Phase - Initial Charge per Foot
			A												
1	**Investment**	**sC p1-3 cE**													
2															
3	***Investment Based Costs (IBC)***	**sC p1-3 cK**													
4	***Element Specific Expenses***	**sE p3-4 cC-E**		5.7827	7.1707	6.2362	8.5646	7.3332	10.0923	8.6992	12.1458	9.8366	13.9807	12.1795	19.0168
5	***Total IBC + Element Specific Expenses***	***r3 + r4***		5.7827	7.1707	6.2362	8.5646	7.3332	10.0923	8.6992	12.1458	9.8366	13.9807	12.1795	19.0168
6															
7	***Marketing & Business Fees***														
8	Product Management Expense	cA*r5	0.01996	0.1154	0.1431	0.1245	0.1709	0.1464	0.2014	0.1736	0.2424	0.1963	0.2790	0.2431	0.3795
9	Sales Expense	cA*r5	0.01188	0.0687	0.0852	0.0741	0.1017	0.0871	0.1199	0.1033	0.1443	0.1168	0.1661	0.1447	0.2259
10	Product Advertising Expense	cA*r5	0.00000	0.0000	0.0000	0.0000	0.0000	0.0000	0.0000	0.0000	0.0000	0.0000	0.0000	0.0000	0.0000
11	Business Fees (Other Operating Taxes)	cA*(r5+r8:r10)	0.00148	0.0088	0.0110	0.0095	0.0131	0.0112	0.0154	0.0133	0.0186	0.0151	0.0214	0.0186	0.0291
12	***Marketing & Business Fees Total***	***Sum r8:r11***		0.1929	0.2393	0.2081	0.2858	0.2447	0.3367	0.2902	0.4052	0.3282	0.4665	0.4064	0.6345
13															
14	***Sub-Total Expenses***	***r5 + r12***		5.9756	7.4100	6.4443	8.8503	7.5779	10.4291	8.9894	12.5510	10.1648	14.4471	12.5859	19.6513
15															
16	***Other Direct Expenses***														
17	Network Operations	cA*r14	0.03483	0.2081	0.2581	0.2245	0.3083	0.2640	0.3633	0.3131	0.4372	0.3541	0.5032	0.4384	0.6845
18	Network Support Assets	cA*r14	0.01470	0.0879	0.1090	0.0948	0.1301	0.1114	0.1533	0.1322	0.1845	0.1495	0.2124	0.1851	0.2889
19	General Support Assets	cA*r14	0.08874	0.5303	0.6576	0.5719	0.7854	0.6725	0.9255	0.7977	1.1138	0.9020	1.2821	1.1169	1.7439
20	General Purpose Computers	cA*r14	0.04334	0.2590	0.3212	0.2793	0.3836	0.3284	0.4520	0.3896	0.5440	0.4406	0.6262	0.5455	0.8517
21	Uncollectible - Interconnect	cA*r14	0.00379	0.0226	0.0281	0.0244	0.0335	0.0287	0.0395	0.0340	0.0475	0.0385	0.0547	0.0476	0.0744
22	Accounting and Finance Expense	cA*r14	0.00735	0.0439	0.0544	0.0473	0.0650	0.0557	0.0766	0.0660	0.0922	0.0747	0.1061	0.0925	0.1444
23	Human Resources Expense	cA*r14	0.00829	0.0496	0.0615	0.0534	0.0734	0.0628	0.0865	0.0746	0.1041	0.0843	0.1198	0.1044	0.1630
24	Information Management Expense	cA*r14	0.07089	0.4236	0.5253	0.4568	0.6274	0.5372	0.7393	0.6372	0.8897	0.7205	1.0241	0.8922	1.3930
25	Intangibles	cA*r14	0.00000	0.0000	0.0000	0.0000	0.0000	0.0000	0.0000	0.0000	0.0000	0.0000	0.0000	0.0000	0.0000
26	***Total Other Direct Expenses***	***Sum r17:r25***		1.6250	2.0150	1.7524	2.4067	2.0607	2.8360	2.4445	3.4130	2.7641	3.9286	3.4225	5.3438
27															
28	***Total Element Long Run Incremental C[illegible]***	***r 14 + r26***		7.6006	9.4250	8.1967	11.2570	9.6386	13.2651	11.4339	15.9640	12.9289	18.3758	16.0084	24.9952
29															
30	***Common***														
31	Executive Expense	cA*r28	0.01127	0.0856	0.1062	0.0924	0.1268	0.1086	0.1495	0.1288	0.1799	0.1457	0.2070	0.1804	0.2816
32	Planning Expense	cA*r28	0.00053	0.0040	0.0050	0.0043	0.0059	0.0051	0.0070	0.0060	0.0084	0.0068	0.0097	0.0084	0.0131
33	External Relations Expense	cA*r28	0.03785	0.2877	0.3567	0.3102	0.4260	0.3648	0.5020	0.4327	0.6042	0.4893	0.6955	0.6059	0.9460
34	Legal Expense	cA*r28	0.00472	0.0359	0.0445	0.0387	0.0531	0.0455	0.0626	0.0539	0.0753	0.0610	0.0867	0.0755	0.1179
35	Other Procurement Expense	cA*r28	0.00186	0.0141	0.0175	0.0152	0.0209	0.0179	0.0247	0.0213	0.0297	0.0240	0.0342	0.0298	0.0465
36	Research and Development Expense	cA*r28	0.00001	0.0000	0.0001	0.0000	0.0001	0.0001	0.0001	0.0001	0.0001	0.0001	0.0001	0.0001	0.0001
37	Other General and Admin Exp	cA*r28	0.01506	0.1145	0.1420	0.1235	0.1696	0.1452	0.1998	0.1722	0.2405	0.1948	0.2768	0.2411	0.3765
38	***Total Common Costs***	***Sum r31:r37***		0.5418	0.6719	0.5843	0.8025	0.6871	0.9456	0.8151	1.1380	0.9216	1.3099	1.1412	1.7818
39															
40	***TELRIC + Common***	***r28 + r38***		**8.14**	**10.10**	**8.78**	**12.06**	**10.33**	**14.21**	**12.25**	**17.10**	**13.85**	**19.69**	**17.15**	**26.78**

c = column, r = row, s = section, p = page

B. 1.4 Dev Total Prod Costs - S rd Collocation Power Usage

	Version 1.0 Created 6/3/02, 9:53:02 AM			1.4.4 Backup AC Power Cable - Monthly Charges											
Row	South Dakota	Source or Calculation	Factor Value (sF)	20 Amp, Single Phase per Foot per Month	20 Amp, Three Phase per Foot per Month	30 Amp, Single Phase per Foot per Month	30 Amp, Three Phase per Foot per Month	40 Amp, Single Phase per Foot per Month	40 Amp, Three Phase per Foot per Month	50 Amp, Single Phase per Foot per Month	50 Amp, Three Phase per Foot per Month	60 Amp, Single Phase per Foot per Month	60 Amp, Three Phase per Foot per Month	100 Amp, Single Phase per Foot per Month	100 Amp, Three Phase per Foot per Month
			A												
1	**Investment**	**sC p1-3 cE**													
2															
3	***Investment Based Costs (IBC)***	**sC p1-3 cK**													
4	***Element Specific Expenses***	**sE p3-4 cC-E**		0.0107	0.0133	0.0115	0.0159	0.0136	0.0187	0.0161	0.0225	0.0182	0.0259	0.0226	0.0352
5	***Total IBC + Element Specific Expenses***	***r3 + r4***		0.0107	0.0133	0.0115	0.0159	0.0136	0.0187	0.0161	0.0225	0.0182	0.0259	0.0226	0.0352
6															
7	***Marketing & Business Fees***														
8	Product Management Expense	cA*r5	0.01996	0.0002	0.0003	0.0002	0.0003	0.0003	0.0004	0.0003	0.0004	0.0004	0.0005	0.0005	0.0007
9	Sales Expense	cA*r5	0.01188	0.0001	0.0002	0.0001	0.0002	0.0002	0.0002	0.0002	0.0003	0.0002	0.0003	0.0003	0.0004
10	Product Advertising Expense	cA*r5	0.00000	0.0000	0.0000	0.0000	0.0000	0.0000	0.0000	0.0000	0.0000	0.0000	0.0000	0.0000	0.0000
11	Business Fees (Other Operating Taxes)	cA*(r5+r8:r10)	0.00148	0.0000	0.0000	0.0000	0.0000	0.0000	0.0000	0.0000	0.0000	0.0000	0.0000	0.0000	0.0001
12	***Marketing & Business Fees Total***	***Sum r8:r11***		0.0004	0.0004	0.0004	0.0005	0.0005	0.0006	0.0005	0.0008	0.0006	0.0009	0.0008	0.0012
13															
14	***Sub-Total Expenses***	***r5 + r12***		0.0111	0.0137	0.0119	0.0164	0.0140	0.0193	0.0166	0.0232	0.0188	0.0268	0.0233	0.0364
15															
16	***Other Direct Expenses***														
17	Network Operations	cA*r14	0.03483	0.0004	0.0005	0.0004	0.0006	0.0005	0.0007	0.0006	0.0008	0.0007	0.0009	0.0008	0.0013
18	Network Support Assets	cA*r14	0.01470	0.0002	0.0002	0.0002	0.0002	0.0002	0.0003	0.0002	0.0003	0.0003	0.0004	0.0003	0.0005
19	General Support Assets	cA*r14	0.08874	0.0010	0.0012	0.0011	0.0015	0.0012	0.0017	0.0015	0.0021	0.0017	0.0024	0.0021	0.0032
20	General Purpose Computers	cA*r14	0.04334	0.0005	0.0006	0.0005	0.0007	0.0006	0.0008	0.0007	0.0010	0.0008	0.0012	0.0010	0.0016
21	Uncollectible - Interconnect	cA*r14	0.00379	0.0000	0.0001	0.0000	0.0001	0.0001	0.0001	0.0001	0.0001	0.0001	0.0001	0.0001	0.0001
22	Accounting and Finance Expense	cA*r14	0.00735	0.0001	0.0001	0.0001	0.0001	0.0001	0.0001	0.0001	0.0002	0.0001	0.0002	0.0002	0.0003
23	Human Resources Expense	cA*r14	0.00829	0.0001	0.0001	0.0001	0.0001	0.0001	0.0002	0.0001	0.0002	0.0002	0.0002	0.0002	0.0003
24	Information Management Expense	cA*r14	0.07089	0.0008	0.0010	0.0008	0.0012	0.0010	0.0014	0.0012	0.0016	0.0013	0.0019	0.0017	0.0026
25	Intangibles	cA*r14	0.00000	0.0000	0.0000	0.0000	0.0000	0.0000	0.0000	0.0000	0.0000	0.0000	0.0000	0.0000	0.0000
26	***Total Other Direct Expenses***	***Sum r17:r25***		0.0030	0.0037	0.0032	0.0045	0.0038	0.0053	0.0045	0.0063	0.0051	0.0073	0.0063	0.0099
27															
28	***Total Element Long Run Incremental Co***	***r 14 + r26***		0.0141	0.0175	0.0152	0.0208	0.0179	0.0246	0.0212	0.0296	0.0239	0.0340	0.0296	0.0463
29															
30	***Common***														
31	Executive Expense	cA*r28	0.01127	0.0002	0.0002	0.0002	0.0002	0.0002	0.0003	0.0002	0.0003	0.0003	0.0004	0.0003	0.0005
32	Planning Expense	cA*r28	0.00053	0.0000	0.0000	0.0000	0.0000	0.0000	0.0000	0.0000	0.0000	0.0000	0.0000	0.0000	0.0000
33	External Relations Expense	cA*r28	0.03785	0.0005	0.0007	0.0006	0.0008	0.0007	0.0009	0.0008	0.0011	0.0009	0.0013	0.0011	0.0018
34	Legal Expense	cA*r28	0.00472	0.0001	0.0001	0.0001	0.0001	0.0001	0.0001	0.0001	0.0001	0.0001	0.0002	0.0001	0.0002
35	Other Procurement Expense	cA*r28	0.00186	0.0000	0.0000	0.0000	0.0000	0.0000	0.0000	0.0000	0.0001	0.0000	0.0001	0.0001	0.0001
36	Research and Development Expense	cA*r28	0.00001	0.0000	0.0000	0.0000	0.0000	0.0000	0.0000	0.0000	0.0000	0.0000	0.0000	0.0000	0.0000
37	Other General and Admin Exp	cA*r28	0.01506	0.0002	0.0003	0.0002	0.0003	0.0003	0.0004	0.0003	0.0004	0.0004	0.0005	0.0004	0.0007
38	***Total Common Costs***	***Sum r31:r37***		0.0010	0.0012	0.0011	0.0015	0.0013	0.0018	0.0015	0.0021	0.0017	0.0024	0.0021	0.0033
39															
40	***TELRIC + Common***	***r28 + r38***		**0.0151**	**0.0187**	**0.0163**	**0.0223**	**0.0191**	**0.0263**	**0.0227**	**0.0317**	**0.0257**	**0.0365**	**0.0318**	**0.0496**

c = column, r = row, s = section, p = page

B. 1.5-1.7 Dev Total Prod ... - Standard Collocation

sion 1.0 Created 6/3/02, 9:53:02 AM

Row	South Dakota	Source or Calculation	Factor Value (sF)	1.5 Security: Access Card per Employee	1.5 Security: Card Access Per Person per Office per Month	1.6 Central office Clock Synchronization: C O Clock Synchronization per Port	1.7 Interconnection Tie Pair: DS0 Per Connection	1.7 Interconnection Tie Pair: DS1 Per Connection	1.7 Interconnection Tie Pair: DS3 Per Connection
			A						
1	**Investment**	**sC p1-3 cE**		9.57	250.00	365.5045	23.0897	62.7747	750.00
2									
3	***Investment Based Costs (IBC)***	**sC p1-3 cK**		0.1914	5.0005	6.0285	0.3548	1.0354	12.3703
4	***Element Specific Expenses***	**sE p4 cD**		0.4139					
5	***Total IBC + Element Specific Expenses***	***r3 + r4***		0.6053	5.0005	6.0285	0.3548	1.0354	12.3703
6									
7	***Marketing & Business Fees***								
8	Product Management Expense	cA*r5	0.01996	0.0121	0.0998	0.1203	0.0071	0.0207	0.2469
9	Sales Expense	cA*r5	0.01188	0.0072	0.0594	0.0716	0.0042	0.0123	0.1469
10	Product Advertising Expense	cA*r5	0.00000	0.0000	0.0000	0.0000	0.0000	0.0000	0.0000
11	Business Fees (Other Operating Taxes)	cA*(r5+r8:r10)	0.00148	0.0009	0.0077	0.0092	0.0005	0.0016	0.0189
12	***Marketing & Business Fees Total***	***Sum r8:r11***		0.0202	0.1668	0.2011	0.0118	0.0345	0.4127
13									
14	***Sub-Total Expenses***	***r5 + r12***		0.6255	5.1674	6.2297	0.3666	1.0699	12.7831
15									
16	***Other Direct Expenses***								
17	Network Operations	cA*r14	0.03483	0.0218	0.1800	0.2170	0.0128	0.0373	0.4453
18	Network Support Assets	cA*r14	0.01470	0.0092	0.0760	0.0916	0.0054	0.0157	0.1880
19	General Support Assets	cA*r14	0.08874	0.0555	0.4586	0.5528	0.0325	0.0949	1.1344
20	General Purpose Computers	cA*r14	0.04334	0.0271	0.2240	0.2700	0.0159	0.0464	0.5540
21	Uncollectible - Interconnect	cA*r14	0.00379	0.0024	0.0196	0.0236	0.0014	0.0041	0.0484
22	Accounting and Finance Expense	cA*r14	0.00735	0.0046	0.0380	0.0458	0.0027	0.0079	0.0939
23	Human Resources Expense	cA*r14	0.00829	0.0052	0.0429	0.0517	0.0030	0.0089	0.1060
24	Information Management Expense	cA*r14	0.07089	0.0443	0.3663	0.4416	0.0260	0.0758	0.9062
25	Intangibles	cA*r14	0.00000	0.0000	0.0000	0.0000	0.0000	0.0000	0.0000
26	***Total Other Direct Expenses***	***Sum r17:r25***		0.1701	1.4052	1.6940	0.0997	0.2909	3.4761
27									
28	***Total Element Long Run Incremental Co***	***r 14 + r26***		0.7956	6.5725	7.9237	0.4663	1.3609	16.2592
29									
30	***Common***								
31	Executive Expense	cA*r28	0.01127	0.0090	0.0741	0.0893	0.0053	0.0153	0.1832
32	Planning Expense	cA*r28	0.00053	0.0004	0.0035	0.0042	0.0002	0.0007	0.0085
33	External Relations Expense	cA*r28	0.03785	0.0301	0.2487	0.2999	0.0176	0.0515	0.6153
34	Legal Expense	cA*r28	0.00472	0.0038	0.0310	0.0374	0.0022	0.0064	0.0767
35	Other Procurement Expense	cA*r28	0.00186	0.0015	0.0122	0.0147	0.0009	0.0025	0.0302
36	Research and Development Expense	cA*r28	0.00001	0.0000	0.0000	0.0000	0.0000	0.0000	0.0001
37	Other General and Admin Exp	cA*r28	0.01506	0.0120	0.0990	0.1194	0.0070	0.0205	0.2449
38	***Total Common Costs***	***Sum r31:r37***		0.0567	0.4685	0.5648	0.0332	0.0970	1.1590
39									
40	***TELRIC + Common***	***r28 + r38***		**0.8523**	**7.0410**	**8.4886**	**0.4996**	**1.4579**	**17.4182**

B. 2 Dev Total Prod Co[illegible]Cageless Collocation

[illegible]on 1.0 Created 6/3/02, 9:53:02 AM

Row	South Dakota	Source or Calculation	Factor Value (sF)	Space Construction for 2 Bays - 90 Day	Space Construction Adjustment for Each Additional Bay 90 Day	20A DC Power Feed - 90 Day	30A DC Power Feed - 90 Day	40A DC Power Feed - 90 Day	60A DC Power Feed - 90 Day	100A DC Power Feed - 90 Day	200A DC Power Feed - 90 Day	300A DC Power Feed - 90 Day	400A DC Power Feed - 90 Day
				2.1.2 Space Construction - 90 Day Installation									
			A										
1	**Investment**	**sC p1-3 cE**											
2													
3	***Investment Based Costs (IBC)***	**sC p1-3 cK**											
4	***Element Specific Expenses***	**sE p1-2 cB-D**		15126.62	335.03	3211.38	3656.39	4416.04	7820.98	13191.12	24555.12	38611.52	54823.23
5	***Total IBC + Element Specific Expenses***	***r3 + r4***		15126.62	335.03	3211.38	3656.39	4416.04	7820.98	13191.12	24555.12	38611.52	54823.23
6													
7	***Marketing & Business Fees***												
8	Product Management Expense	cA*r5	0.01996	301.89	6.69	64.09	72.97	88.13	156.08	263.26	490.05	770.58	1094.12
9	Sales Expense	cA*r5	0.01188	179.66	3.98	38.14	43.43	52.45	92.89	156.67	291.65	458.60	651.15
10	Product Advertising Expense	cA*r5	0.00000	0.00	0.00	0.00	0.00	0.00	0.00	0.00	0.00	0.00	0.00
11	Business Fees (Other Operating Taxes)	cA*(r5+r8:r10)	0.00148	23.15	0.51	4.91	5.60	6.76	11.97	20.19	37.58	59.09	83.90
12	***Marketing & Business Fees Total***	***Sum r8:r11***		504.70	11.18	107.15	121.99	147.34	260.95	440.12	819.28	1288.27	1829.17
13													
14	***Sub-Total Expenses***	***r5 + r12***		15631.31	346.21	3318.53	3778.38	4563.38	8081.92	13631.24	25374.40	39899.78	56652.40
15													
16	***Other Direct Expenses***												
17	Network Operations	cA*r14	0.03483	544.47	12.06	115.59	131.61	158.95	281.51	474.80	883.84	1389.78	1973.31
18	Network Support Assets	cA*r14	0.01470	229.83	5.09	48.79	55.56	67.10	118.83	200.43	373.09	586.67	832.99
19	General Support Assets	cA*r14	0.08874	1387.16	30.72	294.49	335.30	404.96	717.21	1209.67	2251.78	3540.79	5027.46
20	General Purpose Computers	cA*r14	0.04334	677.49	15.01	143.83	163.76	197.79	350.29	590.81	1099.78	1729.34	2455.44
21	Uncollectible - Interconnect	cA*r14	0.00379	59.18	1.31	12.56	14.30	17.28	30.60	51.61	96.07	151.06	214.48
22	Accounting and Finance Expense	cA*r14	0.00735	114.82	2.54	24.38	27.76	33.52	59.37	100.13	186.39	293.09	416.16
23	Human Resources Expense	cA*r14	0.00829	129.64	2.87	27.52	31.34	37.85	67.03	113.05	210.45	330.92	469.86
24	Information Management Expense	cA*r14	0.07089	1108.06	24.54	235.24	267.84	323.48	572.90	966.28	1798.71	2828.37	4015.91
25	Intangibles	cA*r14	0.00000	0.00	0.00	0.00	0.00	0.00	0.00	0.00	0.00	0.00	0.00
26	***Total Other Direct Expenses***	***Sum r17:r25***		4250.65	94.15	902.41	1027.46	1240.93	2197.73	3706.77	6900.11	10850.02	15405.59
27													
28	***Total Element Long Run Incremental Co***	***r 14 + r26***		19881.97	440.36	4220.94	4805.85	5804.31	10279.65	17338.00	32274.51	50749.80	72057.99
29													
30	***Common***												
31	Executive Expense	cA*r28	0.01127	224.02	4.96	47.56	54.15	65.40	115.83	195.36	363.65	571.82	811.91
32	Planning Expense	cA*r28	0.00053	10.44	0.23	2.22	2.52	3.05	5.40	9.11	16.96	26.66	37.86
33	External Relations Expense	cA*r28	0.03785	752.45	16.67	159.75	181.88	219.67	389.04	656.18	1221.46	1920.68	2727.11
34	Legal Expense	cA*r28	0.00472	93.79	2.08	19.91	22.67	27.38	48.49	81.79	152.25	239.41	339.92
35	Other Procurement Expense	cA*r28	0.00186	36.97	0.82	7.85	8.94	10.79	19.12	32.24	60.01	94.37	133.99
36	Research and Development Expense	cA*r28	0.00001	0.12	0.00	0.02	0.03	0.03	0.06	0.10	0.19	0.30	0.42
37	Other General and Admin Exp	cA*r28	0.01506	299.50	6.63	63.58	72.39	87.44	154.85	261.18	486.18	764.49	1085.47
38	***Total Common Costs***	***Sum r31:r37***		1417.30	31.39	300.89	342.59	413.76	732.79	1235.95	2300.70	3617.73	5136.69
39													
40	***TELRIC + Common***	***r28 + r38***		**21299.26**	**471.75**	**4521.83**	**5148.43**	**6218.08**	**11012.44**	**18573.95**	**34575.21**	**54367.53**	**77194.68**

c = column, r = row, s = section, p = page

B. 2 Dev Total Prod Co Cageless Collocation

	Vc .1 1.0 Created 6/3/02, 9:53:02 AM												
				2.1.3 Space Monthly Charge									
Row	South Dakota	Source or Calculation	Factor Value (sF)	Space Monthly Charge for 2 Bays	Space Monthly Charge Adjustment for Each Additional Bay per Month	Space Monthly Charge for 20A DC Power Feed per Month	Space Monthly Charge for 30A DC Power Feed per Month	Space Monthly Charge for 40A DC Power Feed per Month	Space Monthly Charge for 60A DC Power Feed per Month	Space Monthly Charge for 100A DC Power Feed per Month	Space Monthly Charge for 200A DC Power Feed per Month	Space Monthly Charge for 300A DC Power Feed per Month	Space Monthly Charge for 400A DC Power Feed per Month
			A										
1	**Investment**	**sC p1-3 cE**											
2													
3	***Investment Based Costs (IBC)***	**sC p1-3 cK**											
4	***Element Specific Expenses***	**sE p1-2 cB-D**		28.0143	0.6205	5.9474	6.7716	8.1785	14.4844	24.4298	45.4758	71.5081	101.5321
5	***Total IBC + Element Specific Expenses***	***r3 + r4***		28.0143	0.6205	5.9474	6.7716	8.1785	14.4844	24.4298	45.4758	71.5081	101.5321
6													
7	***Marketing & Business Fees***												
8	Product Management Expense	cA*r5	0.01996	0.5591	0.0124	0.1187	0.1351	0.1632	0.2891	0.4876	0.9076	1.4271	2.0263
9	Sales Expense	cA*r5	0.01188	0.3327	0.0074	0.0706	0.0804	0.0971	0.1720	0.2902	0.5401	0.8493	1.2059
10	Product Advertising Expense	cA*r5	0.00000	0.0000	0.0000	0.0000	0.0000	0.0000	0.0000	0.0000	0.0000	0.0000	0.0000
11	Business Fees (Other Operating Taxes)	cA*(r5+r8:r10)	0.00148	0.0429	0.0009	0.0091	0.0104	0.0125	0.0222	0.0374	0.0696	0.1094	0.1554
12	***Marketing & Business Fees Total***	***Sum r8:r11***		0.9347	0.0207	0.1984	0.2259	0.2729	0.4833	0.8151	1.5173	2.3859	3.3876
13													
14	***Sub-Total Expenses***	***r5 + r12***		28.9490	0.6412	6.1459	6.9975	8.4513	14.9676	25.2449	46.9931	73.8940	104.9197
15													
16	***Other Direct Expenses***												
17	Network Operations	cA*r14	0.03483	1.0083	0.0223	0.2141	0.2437	0.2944	0.5213	0.8793	1.6369	2.5739	3.6545
18	Network Support Assets	cA*r14	0.01470	0.4257	0.0094	0.0904	0.1029	0.1243	0.2201	0.3712	0.6910	1.0865	1.5427
19	General Support Assets	cA*r14	0.08874	2.5690	0.0569	0.5454	0.6210	0.7500	1.3283	2.2403	4.1703	6.5575	9.3108
20	General Purpose Computers	cA*r14	0.04334	1.2547	0.0278	0.2664	0.3033	0.3663	0.6487	1.0942	2.0368	3.2027	4.5474
21	Uncollectible - Interconnect	cA*r14	0.00379	0.1096	0.0024	0.0233	0.0265	0.0320	0.0567	0.0956	0.1779	0.2798	0.3972
22	Accounting and Finance Expense	cA*r14	0.00735	0.2127	0.0047	0.0451	0.0514	0.0621	0.1099	0.1854	0.3452	0.5428	0.7707
23	Human Resources Expense	cA*r14	0.00829	0.2401	0.0053	0.0510	0.0580	0.0701	0.1241	0.2094	0.3897	0.6129	0.8702
24	Information Management Expense	cA*r14	0.07089	2.0521	0.0455	0.4357	0.4960	0.5991	1.0610	1.7895	3.3312	5.2381	7.4374
25	Intangibles	cA*r14	0.00000	0.0000	0.0000	0.0000	0.0000	0.0000	0.0000	0.0000	0.0000	0.0000	0.0000
26	***Total Other Direct Expenses***	***Sum r17:r25***		7.8722	0.1744	1.6713	1.9029	2.2982	4.0702	6.8649	12.7789	20.0941	28.5310
27													
28	***Total Element Long Run Incremental Cc***	***r 14 + r26***		36.8212	0.8155	7.8171	8.9004	10.7495	19.0378	32.1098	59.7721	93.9881	133.4507
29													
30	***Common***												
31	Executive Expense	cA*r28	0.01127	0.4149	0.0092	0.0881	0.1003	0.1211	0.2145	0.3618	0.6735	1.0590	1.5037
32	Planning Expense	cA*r28	0.00053	0.0193	0.0004	0.0041	0.0047	0.0056	0.0100	0.0169	0.0314	0.0494	0.0701
33	External Relations Expense	cA*r28	0.03785	1.3935	0.0309	0.2958	0.3368	0.4068	0.7205	1.2152	2.2621	3.5571	5.0506
34	Legal Expense	cA*r28	0.00472	0.1737	0.0038	0.0369	0.0420	0.0507	0.0898	0.1515	0.2820	0.4434	0.6295
35	Other Procurement Expense	cA*r28	0.00186	0.0685	0.0015	0.0145	0.0166	0.0200	0.0354	0.0597	0.1111	0.1748	0.2482
36	Research and Development Expense	cA*r28	0.00001	0.0002	0.0000	0.0000	0.0001	0.0001	0.0001	0.0002	0.0004	0.0006	0.0008
37	Other General and Admin Exp	cA*r28	0.01506	0.5547	0.0123	0.1178	0.1341	0.1619	0.2868	0.4837	0.9004	1.4158	2.0103
38	***Total Common Costs***	***Sum r31:r37***		2.6248	0.0581	0.5572	0.6345	0.7663	1.3571	2.2890	4.2609	6.7000	9.5131
39													
40	***TELRIC + Common***	***r28 + r38***		39.4460	0.8737	8.3744	9.5348	11.5158	20.3949	34.3988	64.0329	100.6881	142.9638

c = column, r = row, s = section, p = page

B. 2 Dev Total Prod Co: ageless Collocation

	Version 1.0 Created 6/3/02, 9:53:02 AM				
				2.2 Rent	2.3 Quote Preparation Fee - Cageless Construction
Row	South Dakota	Source or Calculation	Factor Value (sF)	Rent per Square Foot	Quotation Preparation Fee
			A		
1	**Investment**	**sC p1-3 cE**		170.44	
2					
3	***Investment Based Costs (IBC)***	**sC p1-3 cK**		2.1517	
4	***Element Specific Expenses***	**sE p1-2 cB-D**			3174.25
5	***Total IBC + Element Specific Expenses***	***r3 + r4***		2.1517	3174.25
6					
7	***Marketing & Business Fees***				
8	Product Management Expense	cA*r5	0.01996	0.0429	63.35
9	Sales Expense	cA*r5	0.01188	0.0256	37.70
10	Product Advertising Expense	cA*r5	0.00000	0.0000	0.00
11	Business Fees (Other Operating Taxes)	cA*(r5+r8:r10)	0.00148	0.0033	4.86
12	***Marketing & Business Fees Total***	***Sum r8:r11***		0.0718	105.91
13					
14	***Sub-Total Expenses***	***r5 + r12***		2.2234	3280.16
15					
16	***Other Direct Expenses***				
17	Network Operations	cA*r14	0.03483	0.0774	114.25
18	Network Support Assets	cA*r14	0.01470	0.0327	48.23
19	General Support Assets	cA*r14	0.08874	0.1973	291.09
20	General Purpose Computers	cA*r14	0.04334	0.0964	142.17
21	Uncollectible - Interconnect	cA*r14	0.00379	0.0084	12.42
22	Accounting and Finance Expense	cA*r14	0.00735	0.0163	24.10
23	Human Resources Expense	cA*r14	0.00829	0.0184	27.20
24	Information Management Expense	cA*r14	0.07089	0.1576	232.52
25	Intangibles	cA*r14	0.00000	0.0000	0.00
26	***Total Other Direct Expenses***	***Sum r17:r25***		0.6046	891.98
27					
28	***Total Element Long Run Incremental C(***	***r 14 + r26***		2.8281	4172.13
29					
30	***Common***				
31	Executive Expense	cA*r28	0.01127	0.0319	47.01
32	Planning Expense	cA*r28	0.00053	0.0015	2.19
33	External Relations Expense	cA*r28	0.03785	0.1070	157.90
34	Legal Expense	cA*r28	0.00472	0.0133	19.68
35	Other Procurement Expense	cA*r28	0.00186	0.0053	7.76
36	Research and Development Expense	cA*r28	0.00001	0.0000	0.02
37	Other General and Admin Exp	cA*r28	0.01506	0.0426	62.85
38	***Total Common Costs***	***Sum r31:r37***		0.2016	297.41
39					
40	***TELRIC + Common***	***r28 + r38***		**3.0297**	**4469.55**

c = column, r = row, s = section, p = page

B. 3.1 Dev Total Prod Costs - Ca[illegible]ollocation Space Construction

	Version 1.0 Created 6/3/02, 9:53:02 AM			3.1.1 Space Construction - 90 Day Installation				Space Construction - Fencing Credit			
Row	South Dakota	Source or Calculation	Factor Value (sF)	Cage-Up to 100 Sq Ft - 90 Day	Cage-101 Sq Ft to 200 Sq Ft - 90 Day	Cage-201 Sq Ft to 300 Sq Ft - 90 Day	Cage-301 Sq Ft to 400 Sq Ft - 90 Day	Cage-Up to 100 Sq Ft - Fencing Credit	Cage-101 Sq Ft to 200 Sq Ft - Fencing Credit	Cage-201 Sq Ft to 300 Sq Ft - Fencing Credit	Cage-301 Sq Ft to 400 Sq Ft - Fencing Credit
			A								
1	**Investment**	**sC p1-3 cE**									
2											
3	***Investment Based Costs (IBC)***	**sC p1-3 cK**									
4	***Element Specific Expenses***	**sE p2 cC&D**		26291.23	23324.23	28801.23	30177.23	-3970.00	-4950.00	-5560.00	-6140.00
5	***Total IBC + Element Specific Expenses***	***r3 + r4***		26291.23	23324.23	28801.23	30177.23	-3970.00	-4950.00	-5560.00	-6140.00
6											
7	***Marketing & Business Fees***										
8	Product Management Expense	cA*r5	0.01996	524.70	465.49	574.79	602.25	-79.23	-98.79	-110.96	-122.54
9	Sales Expense	cA*r5	0.01188	312.27	277.03	342.08	358.42	-47.15	-58.79	-66.04	-72.93
10	Product Advertising Expense	cA*r5	0.00000	0.00	0.00	0.00	0.00	0.00	0.00	0.00	0.00
11	Business Fees (Other Operating Taxes)	cA*(r5+r8:r10)	0.00148	40.23	35.69	44.08	46.18	-6.08	-7.58	-8.51	-9.40
12	***Marketing & Business Fees Total***	***Sum r8:r11***		877.20	778.21	960.95	1006.86	-132.46	-165.16	-185.51	-204.86
13											
14	***Sub-Total Expenses***	***r5 + r12***		27168.43	24102.44	29762.17	31184.08	-4102.46	-5115.16	-5745.51	-6344.86
15											
16	***Other Direct Expenses***										
17	Network Operations	cA*r14	0.03483	946.33	839.53	1036.67	1086.20	-142.90	-178.17	-200.13	-221.00
18	Network Support Assets	cA*r14	0.01470	399.47	354.39	437.61	458.51	-60.32	-75.21	-84.48	-93.29
19	General Support Assets	cA*r14	0.08874	2410.98	2138.90	2641.16	2767.34	-364.06	-453.93	-509.87	-563.06
20	General Purpose Computers	cA*r14	0.04334	1177.54	1044.65	1289.96	1351.58	-177.81	-221.70	-249.02	-275.00
21	Uncollectible - Interconnect	cA*r14	0.00379	102.86	91.25	112.68	118.06	-15.53	-19.37	-21.75	-24.02
22	Accounting and Finance Expense	cA*r14	0.00735	199.57	177.05	218.63	229.07	-30.14	-37.57	-42.21	-46.61
23	Human Resources Expense	cA*r14	0.00829	225.33	199.90	246.84	258.63	-34.02	-42.42	-47.65	-52.62
24	Information Management Expense	cA*r14	0.07089	1925.89	1708.55	2109.75	2210.54	-290.81	-362.60	-407.28	-449.77
25	Intangibles	cA*r14	0.00000	0.00	0.00	0.00	0.00	0.00	0.00	0.00	0.00
26	***Total Other Direct Expenses***	***Sum r17:r25***		7387.96	6554.22	8093.28	8479.95	-1115.59	-1390.97	-1562.39	-1725.37
27											
28	***Total Element Long Run Incremental Co***	***r 14 + r26***		34556.39	30656.66	37855.46	39664.03	-5218.05	-6506.13	-7307.90	-8070.23
29											
30	***Common***										
31	Executive Expense	cA*r28	0.01127	389.36	345.42	426.54	446.91	-58.79	-73.31	-82.34	-90.93
32	Planning Expense	cA*r28	0.00053	18.15	16.11	19.89	20.84	-2.74	-3.42	-3.84	-4.24
33	External Relations Expense	cA*r28	0.03785	1307.82	1160.23	1432.68	1501.13	-197.48	-246.23	-276.58	-305.43
34	Legal Expense	cA*r28	0.00472	163.02	144.62	178.58	187.11	-24.62	-30.69	-34.47	-38.07
35	Other Procurement Expense	cA*r28	0.00186	64.26	57.01	70.39	73.76	-9.70	-12.10	-13.59	-15.01
36	Research and Development Expense	cA*r28	0.00001	0.20	0.18	0.22	0.23	-0.03	-0.04	-0.04	-0.05
37	Other General and Admin Exp	cA*r28	0.01506	520.55	461.81	570.25	597.49	-78.60	-98.01	-110.08	-121.57
38	***Total Common Costs***	***Sum r31:r37***		2463.37	2185.38	2698.55	2827.47	-371.97	-463.79	-520.95	-575.29
39											
40	***TELRIC + Common***	***r28 + r38***		37019.76	32842.03	40554.00	42491.50	-5590.02	-6969.92	-7828.84	-8645.52

c = column, r = row, s = section, p = page

B. 3.1 Dev Total Prod Costs - Ca[illegible]ollocation Space Construction

	Version 1.0 Created 6/3/02, 9:53:02 AM										
				3.1.3 DC Power Feed - 90 Day							
Row	South Dakota	Source or Calculation	Factor Value (sF)	20A DC Power Feed - 90 Day	30A DC Power Feed - 90 Day	40A DC Power Feed - 90 Day	60A DC Power Feed - 90 Day	100A DC Power Feed - 90 Day	200A DC Power Feed - 90 Day	300A DC Power Feed - 90 Day	400A DC Power Feed - 90 Day
			A								
1	**Investment**	**sC p1-3 cE**									
2											
3	***Investment Based Costs (IBC)***	**sC p1-3 cK**									
4	***Element Specific Expenses***	**sE p2 cC&D**		3992.54	4397.68	5258.55	8680.55	14126.45	26296.24	41349.32	58710.55
5	***Total IBC + Element Specific Expenses***	***r3 + r4***		3992.54	4397.68	5258.55	8680.55	14126.45	26296.24	41349.32	58710.55
6											
7	***Marketing & Business Fees***										
8	Product Management Expense	cA*r5	0.01996	79.68	87.77	104.95	173.24	281.92	524.80	825.22	1171.70
9	Sales Expense	cA*r5	0.01188	47.42	52.23	62.46	103.10	167.78	312.33	491.12	697.32
10	Product Advertising Expense	cA*r5	0.00000	0.00	0.00	0.00	0.00	0.00	0.00	0.00	0.00
11	Business Fees (Other Operating Taxes)	cA*(r5+r8:r10)	0.00148	6.11	6.73	8.05	13.28	21.62	40.24	63.28	89.85
12	***Marketing & Business Fees Total***	***Sum r8:r11***		133.21	146.73	175.45	289.62	471.33	877.37	1379.61	1958.87
13											
14	***Sub-Total Expenses***	***r5 + r12***		4125.75	4544.41	5434.00	8970.18	14597.78	27173.61	42728.93	60669.42
15											
16	***Other Direct Expenses***										
17	Network Operations	cA*r14	0.03483	143.71	158.29	189.28	312.45	508.47	946.51	1488.33	2113.23
18	Network Support Assets	cA*r14	0.01470	60.66	66.82	79.90	131.89	214.64	399.55	628.26	892.05
19	General Support Assets	cA*r14	0.08874	366.13	403.28	482.22	796.03	1295.44	2411.44	3791.86	5383.93
20	General Purpose Computers	cA*r14	0.04334	178.82	196.96	235.52	388.79	632.70	1177.76	1851.96	2629.54
21	Uncollectible - Interconnect	cA*r14	0.00379	15.62	17.20	20.57	33.96	55.27	102.88	161.77	229.69
22	Accounting and Finance Expense	cA*r14	0.00735	30.31	33.38	39.92	65.89	107.23	199.61	313.88	445.66
23	Human Resources Expense	cA*r14	0.00829	34.22	37.69	45.07	74.40	121.07	225.37	354.38	503.17
24	Information Management Expense	cA*r14	0.07089	292.46	322.14	385.20	635.87	1034.79	1926.25	3028.92	4300.67
25	Intangibles	cA*r14	0.00000	0.00	0.00	0.00	0.00	0.00	0.00	0.00	0.00
26	***Total Other Direct Expenses***	***Sum r17:r25***		1121.92	1235.77	1477.68	2439.28	3969.60	7389.37	11619.36	16497.95
27											
28	***Total Element Long Run Incremental Cc***	***r 14 + r26***		5247.68	5780.18	6911.68	11409.46	18567.38	34562.98	54348.29	77167.37
29											
30	***Common***										
31	Executive Expense	cA*r28	0.01127	59.13	65.13	77.88	128.56	209.21	389.44	612.37	869.48
32	Planning Expense	cA*r28	0.00053	2.76	3.04	3.63	5.99	9.75	18.16	28.55	40.54
33	External Relations Expense	cA*r28	0.03785	198.60	218.76	261.58	431.80	702.70	1308.07	2056.87	2920.48
34	Legal Expense	cA*r28	0.00472	24.76	27.27	32.61	53.82	87.59	163.05	256.38	364.03
35	Other Procurement Expense	cA*r28	0.00186	9.76	10.75	12.85	21.22	34.53	64.27	101.06	143.49
36	Research and Development Expense	cA*r28	0.00001	0.03	0.03	0.04	0.07	0.11	0.20	0.32	0.45
37	Other General and Admin Exp	cA*r28	0.01506	79.05	87.07	104.12	171.87	279.70	520.65	818.69	1162.44
38	***Total Common Costs***	***Sum r31:r37***		374.08	412.04	492.70	813.33	1323.59	2463.84	3874.25	5500.92
39											
40	***TELRIC + Common***	***r28 + r38***		5621.76	6192.23	7404.38	12222.79	19890.97	37026.82	58222.54	82668.28

c = column, r = row, s = section, p = page

B. 3.1 Dev Total Prod Costs - Ca[illegible]ollocation Space Construction

	Version 1.0 Created 6/3/02, 9:53:02 AM			3.1.4 Space Monthly Charge				Space Monthly Charge - Fencing Credit			
Row	South Dakota	Source or Calculation	Factor Value (sF)	Cage-Up to 100 Sq Ft Monthly Charge	Cage-101 Sq Ft to 200 Sq Ft Monthly Charge	Cage-201 Sq Ft to 300 Sq Ft Monthly Charge	Cage-301 Sq Ft to 400 Sq Ft Monthly Charge	Cage-Up to 100 Sq Ft Monthly Charge - Fencing Credit	Cage-101 Sq Ft to 200 Sq Ft Monthly Charge - Fencing Credit	Cage-201 Sq Ft to 300 Sq Ft Monthly Charge - Fencing Credit	Cage-301 Sq Ft to 400 Sq Ft Monthly Charge - Fencing Credit
			A								
1	**Investment**	**sC p1-3 cE**									
2											
3	***Investment Based Costs (IBC)***	**sC p1-3 cK**									
4	***Element Specific Expenses***	**sE p2 cC&D**		48.6911	43.1962	53.3396	55.8879	-7.3524	-9.1673	-10.2971	-11.3712
5	***Total IBC + Element Specific Expenses***	***r3 + r4***		48.6911	43.1962	53.3396	55.8879	-7.3524	-9.1673	-10.2971	-11.3712
6											
7	***Marketing & Business Fees***										
8	Product Management Expense	cA*r5	0.01996	0.9717	0.8621	1.0645	1.1154	-0.1467	-0.1830	-0.2055	-0.2269
9	Sales Expense	cA*r5	0.01188	0.5783	0.5131	0.6335	0.6638	-0.0873	-0.1089	-0.1223	-0.1351
10	Product Advertising Expense	cA*r5	0.00000	0.0000	0.0000	0.0000	0.0000	0.0000	0.0000	0.0000	0.0000
11	Business Fees (Other Operating Taxes)	cA*(r5+r8:r10)	0.00148	0.0745	0.0661	0.0816	0.0855	-0.0113	-0.0140	-0.0158	-0.0174
12	***Marketing & Business Fees Total***	***Sum r8:r11***		1.6246	1.4412	1.7797	1.8647	-0.2453	-0.3059	-0.3436	-0.3794
13											
14	***Sub-Total Expenses***	***r5 + r12***		50.3157	44.6375	55.1192	57.7526	-7.5977	-9.4732	-10.6406	-11.7506
15											
16	***Other Direct Expenses***										
17	Network Operations	cA*r14	0.03483	1.7526	1.5548	1.9199	2.0116	-0.2646	-0.3300	-0.3706	-0.4093
18	Network Support Assets	cA*r14	0.01470	0.7398	0.6563	0.8104	0.8492	-0.1117	-0.1393	-0.1565	-0.1728
19	General Support Assets	cA*r14	0.08874	4.4651	3.9612	4.8914	5.1251	-0.6742	-0.8407	-0.9443	-1.0428
20	General Purpose Computers	cA*r14	0.04334	2.1808	1.9347	2.3890	2.5031	-0.3293	-0.4106	-0.4612	-0.5093
21	Uncollectible - Interconnect	cA*r14	0.00379	0.1905	0.1690	0.2087	0.2186	-0.0288	-0.0359	-0.0403	-0.0445
22	Accounting and Finance Expense	cA*r14	0.00735	0.3696	0.3279	0.4049	0.4242	-0.0558	-0.0696	-0.0782	-0.0863
23	Human Resources Expense	cA*r14	0.00829	0.4173	0.3702	0.4571	0.4790	-0.0630	-0.0786	-0.0882	-0.0975
24	Information Management Expense	cA*r14	0.07089	3.5667	3.1642	3.9072	4.0939	-0.5386	-0.6715	-0.7543	-0.8330
25	Intangibles	cA*r14	0.00000	0.0000	0.0000	0.0000	0.0000	0.0000	0.0000	0.0000	0.0000
26	***Total Other Direct Expenses***	***Sum r17:r25***		13.6824	12.1383	14.9887	15.7048	-2.0661	-2.5761	-2.8935	-3.1954
27											
28	***Total Element Long Run Incremental Co***	***r 14 + r26***		63.9981	56.7758	70.1079	73.4574	-9.6638	-12.0493	-13.5341	-14.9460
29											
30	***Common***										
31	Executive Expense	cA*r28	0.01127	0.7211	0.6397	0.7899	0.8277	-0.1089	-0.1358	-0.1525	-0.1684
32	Planning Expense	cA*r28	0.00053	0.0336	0.0298	0.0368	0.0386	-0.0051	-0.0063	-0.0071	-0.0079
33	External Relations Expense	cA*r28	0.03785	2.4221	2.1487	2.6533	2.7801	-0.3657	-0.4560	-0.5122	-0.5656
34	Legal Expense	cA*r28	0.00472	0.3019	0.2678	0.3307	0.3465	-0.0456	-0.0568	-0.0638	-0.0705
35	Other Procurement Expense	cA*r28	0.00186	0.1190	0.1056	0.1304	0.1366	-0.0180	-0.0224	-0.0252	-0.0278
36	Research and Development Expense	cA*r28	0.00001	0.0004	0.0003	0.0004	0.0004	-0.0001	-0.0001	-0.0001	-0.0001
37	Other General and Admin Exp	cA*r28	0.01506	0.9641	0.8553	1.0561	1.1065	-0.1456	-0.1815	-0.2039	-0.2251
38	***Total Common Costs***	***Sum r31:r37***		4.5621	4.0473	4.9977	5.2364	-0.6889	-0.8589	-0.9648	-1.0654
39											
40	***TELRIC + Common***	***r28 + r38***		**68.56**	**60.82**	**75.11**	**78.69**	**-10.35**	**-12.91**	**-14.50**	**-16.01**

c = column, r = row, s = section, p = page

B. 3.1 Dev Total Prod Costs - Ca[illegible]llocation Space Construction

	Version 1.0 Created 6/3/02, 9:53:02 AM			3.1.6 DC Power Feed Monthly Charge							
Row	South Dakota	Source or Calculation	Factor Value (sF)	Space Monthly Charge for 20A DC Power Feed	Space Monthly Charge for 30A DC Power Feed	Space Monthly Charge for 40A DC Power Feed	Space Monthly Charge for 60A DC Power Feed	Space Monthly Charge for 100A DC Power Feed	Space Monthly Charge for 200A DC Power Feed	Space Monthly Charge for 300A DC Power Feed	Space Monthly Charge for 400A DC Power Feed
			A								
1	**Investment**	**sC p1-3 cE**									
2											
3	***Investment Based Costs (IBC)***	**sC p1-3 cK**									
4	***Element Specific Expenses***	**sE p2 cC&D**		7.3941	8.1445	9.7388	16.0763	26.1620	48.7004	76.5785	108.7313
5	***Total IBC + Element Specific Expenses***	***r3 + r4***		7.3941	8.1445	9.7388	16.0763	26.1620	48.7004	76.5785	108.7313
6											
7	***Marketing & Business Fees***										
8	Product Management Expense	cA*r5	0.01996	0.1476	0.1625	0.1944	0.3208	0.5221	0.9719	1.5283	2.1700
9	Sales Expense	cA*r5	0.01188	0.0878	0.0967	0.1157	0.1909	0.3107	0.5784	0.9095	1.2914
10	Product Advertising Expense	cA*r5	0.00000	0.0000	0.0000	0.0000	0.0000	0.0000	0.0000	0.0000	0.0000
11	Business Fees (Other Operating Taxes)	cA*(r5+r8:r10)	0.00148	0.0113	0.0125	0.0149	0.0246	0.0400	0.0745	0.1172	0.1664
12	***Marketing & Business Fees Total***	***Sum r8:r11***		0.2467	0.2717	0.3249	0.5364	0.8729	1.6249	2.5550	3.6278
13											
14	***Sub-Total Expenses***	***r5 + r12***		7.6409	8.4162	10.0637	16.6127	27.0349	50.3252	79.1335	112.3591
15											
16	***Other Direct Expenses***										
17	Network Operations	cA*r14	0.03483	0.2661	0.2932	0.3505	0.5786	0.9417	1.7529	2.7564	3.9137
18	Network Support Assets	cA*r14	0.01470	0.1123	0.1237	0.1480	0.2443	0.3975	0.7400	1.1635	1.6521
19	General Support Assets	cA*r14	0.08874	0.6781	0.7469	0.8931	1.4742	2.3991	4.4660	7.0225	9.9710
20	General Purpose Computers	cA*r14	0.04334	0.3312	0.3648	0.4362	0.7200	1.1718	2.1812	3.4298	4.8699
21	Uncollectible - Interconnect	cA*r14	0.00379	0.0289	0.0319	0.0381	0.0629	0.1024	0.1905	0.2996	0.4254
22	Accounting and Finance Expense	cA*r14	0.00735	0.0561	0.0618	0.0739	0.1220	0.1986	0.3697	0.5813	0.8254
23	Human Resources Expense	cA*r14	0.00829	0.0634	0.0698	0.0835	0.1378	0.2242	0.4174	0.6563	0.9319
24	Information Management Expense	cA*r14	0.07089	0.5416	0.5966	0.7134	1.1776	1.9164	3.5674	5.6095	7.9648
25	Intangibles	cA*r14	0.00000	0.0000	0.0000	0.0000	0.0000	0.0000	0.0000	0.0000	0.0000
26	***Total Other Direct Expenses***	***Sum r17:r25***		2.0778	2.2886	2.7366	4.5175	7.3517	13.6850	21.5189	30.5540
27											
28	***Total Element Long Run Incremental Cc***	***r 14 + r26***		9.7186	10.7048	12.8004	21.1302	34.3866	64.0103	100.6525	142.9132
29											
30	***Common***										
31	Executive Expense	cA*r28	0.01127	0.1095	0.1206	0.1442	0.2381	0.3875	0.7212	1.1341	1.6103
32	Planning Expense	cA*r28	0.00053	0.0051	0.0056	0.0067	0.0111	0.0181	0.0336	0.0529	0.0751
33	External Relations Expense	cA*r28	0.03785	0.3678	0.4051	0.4844	0.7997	1.3014	2.4225	3.8093	5.4087
34	Legal Expense	cA*r28	0.00472	0.0458	0.0505	0.0604	0.0997	0.1622	0.3020	0.4748	0.6742
35	Other Procurement Expense	cA*r28	0.00186	0.0181	0.0199	0.0238	0.0393	0.0639	0.1190	0.1872	0.2657
36	Research and Development Expense	cA*r28	0.00001	0.0001	0.0001	0.0001	0.0001	0.0002	0.0004	0.0006	0.0008
37	Other General and Admin Exp	cA*r28	0.01506	0.1464	0.1613	0.1928	0.3183	0.5180	0.9642	1.5162	2.1528
38	***Total Common Costs***	***Sum r31:r37***		0.6928	0.7631	0.9125	1.5063	2.4513	4.5630	7.1751	10.1876
39											
40	***TELRIC + Common***	***r28 + r38***		**10.41**	**11.47**	**13.71**	**22.64**	**36.84**	**68.57**	**107.83**	**153.10**

c = column, r = row, s = section, p = page

B. 3.2-3.4 Dev Total Pro[illegible]ts - Caged Collocation

	Version 1.0 C[illegible] d/3/02, 9:53:02 AM			3.2 Grounding											
				Grounding - 90 Day Installation						Grounding - Monthly Charge					
Row	South Dakota	Source or Calculation	Factor Value (sF)	#2 AWG per Foot - 90 Day	1/0 AWG per Foot - 90 Day	4/0 AWG per Foot - 90 Day	350 KCMIL per Foot - 90 Day	500 KCMIL per Foot - 90 Day	750 KCMIL per Foot - 90 Day	#2 AWG per Foot Monthly Charge	1/0 AWG per Foot Monthly Charge	4/0 AWG per Foot Monthly Charge	350 KCMIL per Foot Monthly Charge	500 KCMIL per Foot Monthly Charge	750 KCMIL per Foot Monthly Charge
			A												
1	**Investment**	**sC p1-3 cE**													
2															
3	***Investment Based Costs (IBC)***	**sC p1-3 cK**													
4	***Element Specific Expenses***	**sE p2 cC&D**		6.8744	12.1047	14.2399	18.3806	21.2735	32.4310	0.0127	0.0224	0.0264	0.0340	0.0394	0.0601
5	***Total IBC + Element Specific Expenses***	***r3 + r4***		6.8744	12.1047	14.2399	18.3806	21.2735	32.4310	0.0127	0.0224	0.0264	0.0340	0.0394	0.0601
6															
7	***Marketing & Business Fees***														
8	Product Management Expense	cA*r5	0.01996	0.1372	0.2416	0.2842	0.3668	0.4246	0.6472	0.0003	0.0004	0.0005	0.0007	0.0008	0.0012
9	Sales Expense	cA*r5	0.01188	0.0816	0.1438	0.1691	0.2183	0.2527	0.3852	0.0002	0.0003	0.0003	0.0004	0.0005	0.0007
10	Product Advertising Expense	cA*r5	0.00000	0.0000	0.0000	0.0000	0.0000	0.0000	0.0000	0.0000	0.0000	0.0000	0.0000	0.0000	0.0000
11	Business Fees (Other Operating Taxes)	cA*(r5+r8:r10)	0.00148	0.0105	0.0185	0.0218	0.0281	0.0326	0.0496	0.0000	0.0000	0.0000	0.0001	0.0001	0.0001
12	***Marketing & Business Fees Total***	***Sum r8:r11***		0.2294	0.4039	0.4751	0.6133	0.7098	1.0821	0.0004	0.0007	0.0009	0.0011	0.0013	0.0020
13															
14	***Sub-Total Expenses***	***r5 + r12***		7.1038	12.5086	14.7150	18.9938	21.9833	33.5130	0.0132	0.0232	0.0273	0.0352	0.0407	0.0621
15															
16	***Other Direct Expenses***														
17	Network Operations	cA*r14	0.03483	0.2474	0.4357	0.5125	0.6616	0.7657	1.1673	0.0005	0.0008	0.0009	0.0012	0.0014	0.0022
18	Network Support Assets	cA*r14	0.01470	0.1045	0.1839	0.2164	0.2793	0.3232	0.4928	0.0002	0.0003	0.0004	0.0005	0.0006	0.0009
19	General Support Assets	cA*r14	0.08874	0.6304	1.1100	1.3058	1.6856	1.9508	2.9740	0.0012	0.0021	0.0024	0.0031	0.0036	0.0055
20	General Purpose Computers	cA*r14	0.04334	0.3079	0.5421	0.6378	0.8232	0.9528	1.4525	0.0006	0.0010	0.0012	0.0015	0.0018	0.0027
21	Uncollectible - Interconnect	cA*r14	0.00379	0.0269	0.0474	0.0557	0.0719	0.0832	0.1269	0.0000	0.0001	0.0001	0.0001	0.0002	0.0002
22	Accounting and Finance Expense	cA*r14	0.00735	0.0522	0.0919	0.1081	0.1395	0.1615	0.2462	0.0001	0.0002	0.0002	0.0003	0.0003	0.0005
23	Human Resources Expense	cA*r14	0.00829	0.0589	0.1037	0.1220	0.1575	0.1823	0.2779	0.0001	0.0002	0.0002	0.0003	0.0003	0.0005
24	Information Management Expense	cA*r14	0.07089	0.5036	0.8867	1.0431	1.3464	1.5583	2.3756	0.0009	0.0016	0.0019	0.0025	0.0029	0.0044
25	Intangibles	cA*r14	0.00000	0.0000	0.0000	0.0000	0.0000	0.0000	0.0000	0.0000	0.0000	0.0000	0.0000	0.0000	0.0000
26	***Total Other Direct Expenses***	***Sum r17:r25***		1.9317	3.4015	4.0015	5.1650	5.9780	9.1133	0.0036	0.0063	0.0074	0.0096	0.0111	0.0169
27															
28	***Total Element Long Run Incremental C[illegible]***	***r 14 + r26***		9.0355	15.9101	18.7165	24.1588	27.9613	42.6263	0.0167	0.0295	0.0347	0.0447	0.0518	0.0789
29															
30	***Common***														
31	Executive Expense	cA*r28	0.01127	0.1018	0.1793	0.2109	0.2722	0.3151	0.4803	0.0002	0.0003	0.0004	0.0005	0.0006	0.0009
32	Planning Expense	cA*r28	0.00053	0.0047	0.0084	0.0098	0.0127	0.0147	0.0224	0.0000	0.0000	0.0000	0.0000	0.0000	0.0000
33	External Relations Expense	cA*r28	0.03785	0.3420	0.6021	0.7083	0.9143	1.0582	1.6132	0.0006	0.0011	0.0013	0.0017	0.0020	0.0030
34	Legal Expense	cA*r28	0.00472	0.0426	0.0751	0.0883	0.1140	0.1319	0.2011	0.0001	0.0001	0.0002	0.0002	0.0002	0.0004
35	Other Procurement Expense	cA*r28	0.00186	0.0168	0.0296	0.0348	0.0449	0.0520	0.0793	0.0000	0.0001	0.0001	0.0001	0.0001	0.0001
36	Research and Development Expense	cA*r28	0.00001	0.0001	0.0001	0.0001	0.0001	0.0002	0.0003	0.0000	0.0000	0.0000	0.0000	0.0000	0.0000
37	Other General and Admin Exp	cA*r28	0.01506	0.1361	0.2397	0.2819	0.3639	0.4212	0.6421	0.0003	0.0004	0.0005	0.0007	0.0008	0.0012
38	***Total Common Costs***	***Sum r31:r37***		0.6441	1.1342	1.3342	1.7222	1.9932	3.0386	0.0012	0.0021	0.0025	0.0032	0.0037	0.0056
39															
40	***TELRIC + Common***	***r28 + r38***		**9.68**	**17.04**	**20.05**	**25.88**	**29.95**	**45.66**	**0.0179**	**0.0316**	**0.0371**	**0.0479**	**0.0555**	**0.0846**

c = column, r = row, s = section, p = page

B. 3.2-3.4 Dev Total Pro[illegible]ts - Caged Collocation

	Version 1.0 Created 6/3/02, 9:53:02 AM				
				3.3 Rent	3.4 Quote Preparation Fee - Caged Construction
Row	South Dakota	Source or Calculation	Factor Value (sF)	Rent per Square Foot	Quotation Preparation Fee - Caged Construction
			A		
1	**Investment**	**sC p1-3 cE**		170.44	
2					
3	***Investment Based Costs (IBC)***	**sC p1-3 cK**		2.1517	
4	***Element Specific Expenses***	**sE p2 cC&D**			3451.33
5	***Total IBC + Element Specific Expenses***	***r3 + r4***		2.1517	3451.33
6					
7	***Marketing & Business Fees***				
8	Product Management Expense	cA*r5	0.01996	0.0429	68.88
9	Sales Expense	cA*r5	0.01188	0.0256	40.99
10	Product Advertising Expense	cA*r5	0.00000	0.0000	0.00
11	Business Fees (Other Operating Taxes)	cA*(r5+r8:r10)	0.00148	0.0033	5.28
12	***Marketing & Business Fees Total***	***Sum r8:r11***		0.0718	115.15
13					
14	***Sub-Total Expenses***	***r5 + r12***		2.2234	3566.48
15					
16	***Other Direct Expenses***				
17	Network Operations	cA*r14	0.03483	0.0774	124.23
18	Network Support Assets	cA*r14	0.01470	0.0327	52.44
19	General Support Assets	cA*r14	0.08874	0.1973	316.50
20	General Purpose Computers	cA*r14	0.04334	0.0964	154.58
21	Uncollectible - Interconnect	cA*r14	0.00379	0.0084	13.50
22	Accounting and Finance Expense	cA*r14	0.00735	0.0163	26.20
23	Human Resources Expense	cA*r14	0.00829	0.0184	29.58
24	Information Management Expense	cA*r14	0.07089	0.1576	252.82
25	Intangibles	cA*r14	0.00000	0.0000	0.00
26	***Total Other Direct Expenses***	***Sum r17:r25***		0.6046	969.84
27					
28	***Total Element Long Run Incremental C[illegible]***	***r 14 + r26***		2.8281	4536.32
29					
30	***Common***				
31	Executive Expense	cA*r28	0.01127	0.0319	51.11
32	Planning Expense	cA*r28	0.00053	0.0015	2.38
33	External Relations Expense	cA*r28	0.03785	0.1070	171.68
34	Legal Expense	cA*r28	0.00472	0.0133	21.40
35	Other Procurement Expense	cA*r28	0.00186	0.0053	8.44
36	Research and Development Expense	cA*r28	0.00001	0.0000	0.03
37	Other General and Admin Exp	cA*r28	0.01506	0.0426	68.33
38	***Total Common Costs***	***Sum r31:r37***		0.2016	323.37
39					
40	***TELRIC + Common***	***r28 + r38***		**3.0297**	**4859.69**

c = column, r = row, s = section, p = page

	Version 1.0 C... d 6/3/02, 9:53:02 AM													
				4.1 Equipment Bay	4.2 Labor									4.3 Quote Preparation Fee - Virtual
Row	South Dakota	Source or Calculation	Factor Value (sF)	Equipment Bay per Shelf	Maintenance - Regular Business Hours Per 1/2 Hour	Maintenance - Outside Regular Business Hours Per 1/2 Hour	Training - Regular Business Hours Per 1/2 Hour	Inspector - Regular Business Hours Per 1/2 Hour	Inspector - Outside Regular Business Hours Per 1/2 Hour	Installation - Regular Business Hours Per 1/2 Hour	Installation - Outside Regular Business Hours Per 1/2 Hour	Engineering - Regular Business Hours Per 1/2 Hour	Engineering - Outside Regular Business Hours Per 1/2 Hour	Quotation Preparation Fee - Virtual
			A											
1	**Investment**	**sC p1-3 cE**		187.97										
2														
3	***Investment Based Costs (IBC)***	**sC p1-3 cK**		3.1004										
4	***Element Specific Expenses***	**sE p79 cB&C & p73**			20.2700	27.1231	20.2700	23.1100	29.7591	23.1100	29.7591	21.8700	28.2314	3174.25
5	***Total IBC + Element Specific Expenses***	***r3 + r4***		3.1004	20.2700	27.1231	20.2700	23.1100	29.7591	23.1100	29.7591	21.8700	28.2314	3174.25
6														
7	***Marketing & Business Fees***													
8	Product Management Expense	cA*r5	0.01996	0.0619	0.4045	0.5413	0.4045	0.4612	0.5939	0.4612	0.5939	0.4365	0.5634	63.35
9	Sales Expense	cA*r5	0.01188	0.0368	0.2408	0.3221	0.2408	0.2745	0.3535	0.2745	0.3535	0.2598	0.3353	37.70
10	Product Advertising Expense	cA*r5	0.00000	0.0000	0.0000	0.0000	0.0000	0.0000	0.0000	0.0000	0.0000	0.0000	0.0000	0.00
11	Business Fees (Other Operating Taxes)	cA*(r5+r8:r10)	0.00148	0.0047	0.0310	0.0415	0.0310	0.0354	0.0455	0.0354	0.0455	0.0335	0.0432	4.86
12	***Marketing & Business Fees Total***	***Sum r8:r11***		0.1034	0.6763	0.9050	0.6763	0.7711	0.9929	0.7711	0.9929	0.7297	0.9419	105.91
13														
14	***Sub-Total Expenses***	***r5 + r12***		3.2038	20.9463	28.0280	20.9463	23.8811	30.7520	23.8811	30.7520	22.5997	29.1733	3280.16
15														
16	***Other Direct Expenses***													
17	Network Operations	cA*r14	0.03483	0.1116	0.7296	0.9763	0.7296	0.8318	1.0711	0.8318	1.0711	0.7872	1.0162	114.25
18	Network Support Assets	cA*r14	0.01470	0.0471	0.3080	0.4121	0.3080	0.3511	0.4522	0.3511	0.4522	0.3323	0.4289	48.23
19	General Support Assets	cA*r14	0.08874	0.2843	1.8588	2.4873	1.8588	2.1193	2.7290	2.1193	2.7290	2.0055	2.5889	291.09
20	General Purpose Computers	cA*r14	0.04334	0.1389	0.9079	1.2148	0.9079	1.0351	1.3329	1.0351	1.3329	0.9795	1.2644	142.17
21	Uncollectible - Interconnect	cA*r14	0.00379	0.0121	0.0793	0.1061	0.0793	0.0904	0.1164	0.0904	0.1164	0.0856	0.1104	12.42
22	Accounting and Finance Expense	cA*r14	0.00735	0.0235	0.1539	0.2059	0.1539	0.1754	0.2259	0.1754	0.2259	0.1660	0.2143	24.10
23	Human Resources Expense	cA*r14	0.00829	0.0266	0.1737	0.2325	0.1737	0.1981	0.2550	0.1981	0.2550	0.1874	0.2420	27.20
24	Information Management Expense	cA*r14	0.07089	0.2271	1.4848	1.9868	1.4848	1.6929	2.1799	1.6929	2.1799	1.6020	2.0680	232.52
25	Intangibles	cA*r14	0.00000	0.0000	0.0000	0.0000	0.0000	0.0000	0.0000	0.0000	0.0000	0.0000	0.0000	0.00
26	***Total Other Direct Expenses***	***Sum r17:r25***		0.8712	5.6960	7.6217	5.6960	6.4940	8.3625	6.4940	8.3625	6.1456	7.9332	891.98
27														
28	***Total Element Long Run Incremental Co***	***r14 + r26***		4.0751	26.6423	35.6497	26.6423	30.3751	39.1145	30.3751	39.1145	28.7453	37.1065	4172.13
29														
30	***Common***													
31	Executive Expense	cA*r28	0.01127	0.0459	0.3002	0.4017	0.3002	0.3423	0.4407	0.3423	0.4407	0.3239	0.4181	47.01
32	Planning Expense	cA*r28	0.00053	0.0021	0.0140	0.0187	0.0140	0.0160	0.0205	0.0160	0.0205	0.0151	0.0195	2.19
33	External Relations Expense	cA*r28	0.03785	0.1542	1.0083	1.3492	1.0083	1.1496	1.4803	1.1496	1.4803	1.0879	1.4043	157.90
34	Legal Expense	cA*r28	0.00472	0.0192	0.1257	0.1682	0.1257	0.1433	0.1845	0.1433	0.1845	0.1356	0.1750	19.68
35	Other Procurement Expense	cA*r28	0.00186	0.0076	0.0495	0.0663	0.0495	0.0565	0.0727	0.0565	0.0727	0.0535	0.0690	7.76
36	Research and Development Expense	cA*r28	0.00001	0.0000	0.0002	0.0002	0.0002	0.0002	0.0002	0.0002	0.0002	0.0002	0.0002	0.02
37	Other General and Admin Exp	cA*r28	0.01506	0.0614	0.4013	0.5370	0.4013	0.4576	0.5892	0.4576	0.5892	0.4330	0.5590	62.85
38	***Total Common Costs***	***Sum r31:r37***		0.2905	1.8992	2.5413	1.8992	2.1653	2.7883	2.1653	2.7883	2.0491	2.6452	297.41
39														
40	***TELRIC + Common***	***r28 + r38***		4.3656	28.5415	38.1910	28.5415	32.5404	41.9028	32.5404	41.9028	30.7944	39.7516	4469.55

c = column, r = row, s = section, p = page

	A	B	C	D	E	F	G	H	I	J	K
1	Version 1.0 Created 6/3/02, 9:53:02 AM										
2	South Dakota										
3	Acct	FRC	Account Name	Source of Investment	Investment	Depreciation cE*(sG p1 cA)	Cost of Money cE*(sG p1 cB)	Income Tax cE*(sG p1 cC)	Ad Valorem cE*(sG p1 cE)	Maintenance cE*(sG p1 cF)	Total Investment Based Costs sum(cF:cJ)
4											
5	**1.2 Entrance Facility**										
6	**Standard Shared Entrance Facility**										
7	2111	20C	Land	*	0.064581	0.0000000	0.0005194	0.0001964	0.0000514	0.0000687	0.000836
8	2121	110C	Building	**	3.458062	0.0074408	0.0215751	0.0081589	0.0027510	0.0036800	0.043606
9	2441	4C	Conduit	sE p3 D7	364.169221	0.6507407	1.9604486	0.7413705	0.2897068	0.2197645	3.862031
10	2232.2	257C	Other Digital Equipment	sE p3 D9	17.3047857	0.1582196	0.0655484	0.0247880	0.0137664	0.0151831	0.277506
11			**Total**		**384.9966495**	**0.8164012**	**2.0480916**	**0.7745138**	**0.3062756**	**0.2386963**	**4.1839785**
12	**Cross Connect Entrance Facility**										
13	2111	20C	Land	*	0.064581	0.0000000	0.0005194	0.0001964	0.0000514	0.0000687	0.000836
14	2121	110C	Building	**	3.458062	0.0074408	0.0215751	0.0081589	0.0027510	0.0036800	0.043606
15	2441	4C	Conduit	sE p3 D12	364.169221	0.6507407	1.9604486	0.7413705	0.2897068	0.2197645	3.862031
16	2232.2	257C	Other Digital Equipment	sE p3 D14	17.3047857	0.1582196	0.0655484	0.0247880	0.0137664	0.0151831	0.277506
17			**Total**		**384.9966495**	**0.8164012**	**2.0480916**	**0.7745138**	**0.3062756**	**0.2386963**	**4.1839785**
18	**Express Entrance Facility**										
19	2111	20C	Land	*	1.162464	0.0000000	0.0093488	0.0035354	0.0009248	0.0012371	0.015046
20	2121	110C	Building	**	62.245112	0.1339352	0.3883523	0.1468607	0.0495177	0.0662409	0.784907
21	2441	4C	Conduit	sE p3 D17	6366.436936	11.3763036	34.2727280	12.9607006	5.0646789	3.8419413	67.516352
22	2232.2	257C	Other Digital Equipment	sE p3 D18	311.486143	2.8479531	1.1798716	0.4461846	0.2477960	0.2732953	4.995101
23			**Total**		**6741.3306535**	**14.3581918**	**35.8503006**	**13.5572813**	**5.3629174**	**4.1827146**	**73.3114058**

	A	B	C	D	E	F	G	H	I	J	K
1	Version 1.0 Created 6/3/02, 9:53:02 AM										
2	South Dakota										
3	Acct	FRC	Account Name	Source of Investment	Investment	Depreciation cE*(sG p1 cA)	Cost of Money cE*(sG p1 cB)	Income Tax cE*(sG p1 cC)	Ad Valorem cE*(sG p1 cE)	Maintenance cE*(sG p1 cF)	Total Investment Based Costs sum(cF:cJ)
4											
24	**1.4.1 AC Power**										
25	**DC Equipment Investment per Amp**										
26	2111	20C	Land	*	1.672788	0.000000	0.013453	0.005087	0.001331	0.001780	0.021651
27	2121	110C	Building	**	89.570885	0.192733	0.558840	0.211333	0.071256	0.095321	1.129483
28	2232.3	357C	Other Digital Equipment	sE p4 C5	448.229405	4.098212	1.697838	0.642061	0.356579	0.952109	7.746800
29			**Total**		**539.473078**	**4.290945**	**2.270131**	**0.858481**	**0.429166**	**1.049210**	**8.897934**
30	**Power Usage-Less than 60 AMPS per Amp Ordered**										
31	2111	20C	Land	*	1.303293	0.000000	0.010481	0.003964	0.001037	0.001387	0.016869
32	2121	110C	Building	**	69.785956	0.150161	0.435400	0.164653	0.055517	0.074266	0.879996
33	2232.3	357C	Other Digital Equipment	sE p4 C5	349.221934	3.192976	1.322810	0.500239	0.277816	0.741802	6.035643
34			**Total**		**420.311184**	**3.343137**	**1.768692**	**0.668855**	**0.334369**	**0.817455**	**6.932508**
35	**1.4.2 Backup AC Power Feed Usage - Monthly Charges**										
36	**Backup AC Power - Per Amp 120 V**										
37	2111	20C	Land	*	1.120972	0.0000000	0.0090151	0.0034092	0.0008918	0.0011929	0.014509
38	2121	110C	Building	**	60.023390	0.1291546	0.3744908	0.1416188	0.0477503	0.0638765	0.756891
39	2232.3	357C	Other Digital Equipment	sE p4 C10	300.3682320	2.7463008	1.1377583	0.4302589	0.2389513	0.6380291	5.191298
40			**Total**		**361.5125934**	**2.8754554**	**1.5212642**	**0.5752868**	**0.2875934**	**0.7030986**	**5.9626984**
41	**Backup AC Power - Per Amp 208 V, Single Phase**										
42	2111	20C	Land	*	1.943018	0.0000000	0.0156262	0.0059092	0.0015457	0.0020677	0.025149
43	2121	110C	Building	**	104.040542	0.2238680	0.6491173	0.2454726	0.0827672	0.1107194	1.311944
44	2232.3	357C	Other Digital Equipment	sE p4 C11	520.6382688	4.7602547	1.9721144	0.7457820	0.4141823	1.1059172	8.998251
45			**Total**		**626.6218285**	**4.9841227**	**2.6368579**	**0.9971639**	**0.4984952**	**1.2187043**	**10.3353439**
46	**Backup AC Power - Per Amp 208 V, Three Phase**										
47	2111	20C	Land	*	3.361421	0.0000000	0.0270332	0.0102230	0.0026741	0.0035772	0.043508
48	2121	110C	Building	**	179.990138	0.3872916	1.1229730	0.4246676	0.1431872	0.1915445	2.269664
49	2232.3	357C	Other Digital Equipment	sE p4 C12	900.7042050	8.2352407	3.4117579	1.2902029	0.7165354	1.9132367	15.566974
50			**Total**		**1084.0557633**	**8.6225323**	**4.5617641**	**1.7250935**	**0.8623967**	**2.1083584**	**17.8801450**
51	**Backup AC Power - Per Amp 240 V, Single Phase**										
52	2111	20C	Land	*	2.241943	0.0000000	0.0180302	0.0068184	0.0017835	0.0023859	0.029018
53	2121	110C	Building	**	120.046779	0.2583092	0.7489815	0.2832376	0.0955006	0.1277531	1.513782
54	2232.3	357C	Other Digital Equipment	sE p4 C13	600.7364640	5.4926016	2.2755166	0.8605177	0.4779027	1.2760583	10.382597
55			**Total**		**723.0251868**	**5.7509108**	**3.0425283**	**1.1505737**	**0.5751868**	**1.4061972**	**11.9253968**
56	**Backup AC Power - Per Amp 240 V, Three Phase**										
57	2111	20C	Land	*	3.878562	0.0000000	0.0311922	0.0117958	0.0030855	0.0041275	0.050201
58	2121	110C	Building	**	207.680928	0.4468750	1.2957380	0.4900010	0.1652160	0.2210129	2.618843
59	2232.3	357C	Other Digital Equipment	sE p4 C14	1039.2740827	9.5022008	3.9366438	1.4886957	0.8267716	2.2075808	17.961893
60			**Total**		**1250.8335731**	**9.9490757**	**5.2635740**	**1.9904925**	**0.9950731**	**2.4327212**	**20.6309365**
61	**Backup AC Power - Per Amp 480 V, Three Phase**										
62	2111	20C	Land	*	7.757124	0.0000000	0.0623844	0.0235915	0.0061710	0.0082551	0.100402
63	2121	110C	Building	**	415.361857	0.8937499	2.5914761	0.9800021	0.3304320	0.4420257	5.237686
64	2232.3	357C	Other Digital Equipment	sE p4 C15	2078.5481653	19.0044015	7.8732875	2.9773913	1.6535433	4.4151616	35.923785
65			**Total**		**2501.6671462**	**19.8981515**	**10.5271480**	**3.9809849**	**1.9901463**	**4.8654424**	**41.2618730**

	A	B	C	D	E	F	G	H	I	J	K
1	Version 1.0 Created 6/3/02, 9:53:02 AM										
2	South Dakota										
3	Acct	FRC	Account Name	Source of Investment	Investment	Depreciation cE*(sG p1 cA)	Cost of Money cE*(sG p1 cB)	Income Tax cE*(sG p1 cC)	Ad Valorem cE*(sG p1 cE)	Maintenance cE*(sG p1 cF)	Total Investment Based Costs sum(cF:cJ)
4											
66	**1.5 Security**										
67	**Access Card per Employee**										
68	2111	20C	Land	*	0.0000000	0.0000000	0.0000000	0.0000000	0.0000000	0.0000000	0.000000
69	2121	110C	Building	**	0.0000000	0.0000000	0.0000000	0.0000000	0.0000000	0.0000000	0.000000
70	2124	361C	Office Equipment	sE p4 C17	9.5669842	0.1314261	0.0379652	0.0143571	0.0076108	0.0000000	0.191359
71			**Total**		**9.5669842**	**0.1314261**	**0.0379652**	**0.0143571**	**0.0076108**	**0.0000000**	**0.1913592**
72	**Card Access Per Person per Office per Month**										
73	2111	20C	Land	*	0.0000000	0.0000000	0.0000000	0.0000000	0.0000000	0.0000000	0.000000
74	2121	110C	Building	**	0.0000000	0.0000000	0.0000000	0.0000000	0.0000000	0.0000000	0.000000
75	2124	361C	Office Equipment	sE p4 C19	250.0000000	3.4343671	0.9920887	0.3751719	0.1988820	0.0000000	5.000510
76			**Total**		**250.0000000**	**3.4343671**	**0.9920887**	**0.3751719**	**0.1988820**	**0.0000000**	**5.0005097**
77	**1.6 Composite Clock**										
78	**Central Office Synchronization - Composite Clock, per Port**										
79	2111	20C	Land	*	1.133350	0.000000	0.009115	0.003447	0.000902	0.001206	0.014669
80	2121	110C	Building	**	60.686188	0.130581	0.378626	0.143183	0.048278	0.064582	0.765249
81	2232.3	357C	Other Digital Equipment	sE p4 C21	303.685000	2.776626	1.150322	0.435010	0.241590	0.645074	5.248623
82			**Total**		**365.504538**	**2.907207**	**1.538062**	**0.581639**	**0.290769**	**0.710862**	**6.028541**

	A	B	C	D	E	F	G	H	I	J	K
1	Version 1.0 Created 6/3/02, 9:53:02 AM										
2	South Dakota										
3	Acct	FRC	Account Name	Source of Investment	Investment	Depreciation cE*(sG p1 cA)	Cost of Money cE*(sG p1 cB)	Income Tax cE*(sG p1 cC)	Ad Valorem cE*(sG p1 cE)	Maintenance cE*(sG p1 cF)	Total Investment Based Costs sum(cF:cJ)
4											
83	**1.7 Interconnection Tie Pair**										
84	**DS0 Per Connection**										
85	2111	20C	Land	*	0.071596	0.0000000	0.0005758	0.0002177	0.0000570	0.0000762	0.000927
86	2121	110C	Building	**	3.833683	0.0082491	0.0239187	0.0090452	0.0030498	0.0040798	0.048342
87	2232.3	377C	Digital Switch	sE p4 C23	19.1844650	0.1741154	0.0726528	0.0274747	0.0152618	0.0160154	0.305520
88			**Total**		**23.0897444**	**0.1823645**	**0.0971473**	**0.0367376**	**0.0183685**	**0.0201714**	**0.3547893**
89	**DS1 Per Connection**										
90	2111	20C	Land	*	0.194651	0.0000000	0.0015654	0.0005920	0.0001548	0.0002071	0.002519
91	2121	110C	Building	**	10.422731	0.0224270	0.0650283	0.0245913	0.0082916	0.0110918	0.131430
92	2232.3	357C	Other Digital Equipment	sE p4 C24	52.1572903	0.4768800	0.1975655	0.0747121	0.0414926	0.1107902	0.901440
93			**Total**		**62.7746721**	**0.4993070**	**0.2641591**	**0.0998954**	**0.0499390**	**0.1220892**	**1.0353898**
94	**DS3 Per Connection**										
95	2111	20C	Land	*	2.325589	0.0000000	0.0187029	0.0070727	0.0018501	0.0024749	0.030101
96	2121	110C	Building	**	124.525632	0.2679465	0.7769254	0.2938050	0.0990636	0.1325195	1.570260
97	2232.3	357C	Other Digital Equipment	sE p4 C25	623.1494771	5.6975263	2.3604144	0.8926230	0.4957329	1.3236670	10.769964
98			**Total**		**750.0006976**	**5.9654729**	**3.1560427**	**1.1935007**	**0.5966466**	**1.4586614**	**12.3703242**
99	**2.2 & 3.3 Space Rental**										
100	2111	20C	Land	sE p4 C27	7.2000000	0.0000000	0.0579039	0.0218971	0.0057278	0.0076622	0.093191
101	2121	110C	Building	sE p4 C28	163.2410650	0.3512520	1.0184741	0.3851499	0.1298628	0.1737202	2.058459
102			**Total**		**170.4410650**	**0.3512520**	**1.0763780**	**0.4070471**	**0.1355906**	**0.1813824**	**2.1516502**
103	**4.1 Equipment Bay**										
104	2111	20C	Land	*	0.582868	0.0000000	0.0046875	0.0017727	0.0004637	0.0006203	0.007544
105	2121	110C	Building	**	31.210166	0.0671561	0.1947227	0.0736371	0.0248286	0.0332137	0.393558
106	2232.3	357C	Office Equipment	sE p78 C16	156.1814902	1.4279851	0.5915965	0.2237203	0.1242468	0.3317539	2.699303
107			**Total**		**187.9745244**	**1.4951412**	**0.7910068**	**0.2991300**	**0.1495390**	**0.3655879**	**3.1004049**
108	c = column, r = row, s = section, p = page										
109	* Land= (sH p1 B10) * (377C +57C+257C+357C+357CS)										
110	** Building = (sH p1 C10) * (377C +57C+257C+357C+357CS)										

	A	B	C	D
1	Version 1.0 Created 6/3/02, 9:53:02 AM			
2	South Dakota			
3	**General Inputs**			
4				
5		Default Value	Overrides (sl)	This Run
6	**1 Standard Collocation**			
7	Number of Bays in Standard Configuration	2		2
8	Number of Bays Cable Racking is Spread Over	3		3
9	Number of Bays Miscellaneous Items are Spread Over	3		3
10	Number of Bays Other Shared Items are Spread Over	3		3
11	Number of DS0 Terminations	100		100
12	Number of DS1 Terminations	28		28
13	Number of DS3 Terminations	1		1
14	% of Blocks that are 410 Blocks	90%		90%
15	Apply Sales Tax to Contract Labor: 1=Yes, 0=No	1		1
16	Shipping Rate	14%		14%
17				
18				
19	**2 Cageless Collocation**			
20	Number of Cageless Collocators per office	3		3
21	% of Jobs that Require Major Aerial Support	50%		50%
22	% of Jobs Requiring Any Aerial Support	85%		85%
23	% of Jobs Requiring Major Cable Racking	50%		50%
24	% of Jobs Requiring Both Major Aerial and Major Cable Racking	73%		73%
25	% of Jobs Requiring some Cable Racking	88%		88%
26				
27				
28	**3 Caged Collocation**			
29	Number of Caged Collocators per office	3		3
30	% of Jobs that Require Major Aerial Support	100%		100%
31	% of Jobs Requiring Any Aerial Support	85%		85%
32	% of Jobs Requiring Major Cable Racking	100%		100%
33	% of Jobs Requiring Both Major Aerial and Major Cable Racking	73%		73%
34	% of Jobs Requiring some Cable Racking	88%		88%
35				
36				
37	**Quotation Preparation Fees**			
38	2.3 Quotation Preparation Fee - Cageless	$ 3,174.25		$ 3,174.25
39	3.4 Quotation Preparation Fee - Caged	$ 3,451.33		$ 3,451.33
40	4.3 Quotation Preparation Fee - Virtual	$ 3,174.25		$ 3,174.25
41				
42				
43				
44				
45				
46				
47				
48				
49				
50				
51				

	F	G	H	I
1	Version 1.0 Created 6/3/02, 9:53:02 AM			
2	South Dakota			
3	**1.1 Terminations**			
4				
5		**Default Value**	**Overrides (sl)**	**This Run**
6	**410 Blocks**			
7	Number of 410 Blocks	0.9		0.9
8	Expense per 410 Block	$ 376.00		$ 376.00
9	45 Day Labor Expense per 410 Block	$ 166.00		$ 166.00
10	90 Day Labor Expense per 410 Block	$ 156.84		$ 156.84
11				
12	**89 Blocks**			
13	Number of 89 Blocks	0.1		0.1
14	Expense per 89 Block	$ 85.46		$ 85.46
15	45 Day Labor Expense per 89 Block	$ 166.00		$ 166.00
16	90 Day Labor Expense per 89 Block	$ 156.84		$ 156.84
17				
18	**DS1 Panel (56 ckts)**			
19	Number of DS1 Panels	1		1
20	Expense per DS1 Panel	$ 317.25		$ 317.25
21	45 Day Labor Expense per DS1 Panel	$ 112.93		$ 112.93
22	90 Day Labor Expense per DS1 Panel	$ 106.69		$ 106.69
23				
24	**DS3 Connectors**			
25	Number of DS3 Connectors	2		2
26	Expense per DS3 Connector	$ 8.50		$ 8.50
27	45 Day Labor Expense per DS3 Connector	$ 4.69		$ 4.69
28	90 Day Labor Expense per DS3 Connector	$ 4.44		$ 4.44
29				
30	**DS0 Cable**			
31	Number of DS0 Cable Feet	156.05		156.05
32	Expense per DS0 Cable Foot	$ 1.45		$ 1.45
33	Number of DS0 Cable Terminations	100.00		100.00
34	45 Day Labor Expense per DS0 Cable foot	$ 1.01		$ 1.01
35	90 Day Labor Expense per DS0 Cable foot	$ 0.96		$ 0.96
36				
37	**DS1 Placement**			
38	Number of DS1 Cable Feet	115.47		115.47
39	Expense per DS1 Cable Foot	$ 1.13		$ 1.13
40	Number of DS1 Cable Terminations	28.00		28.00
41	45 Day Labor Expense per DS1 Cable foot	$ 1.20		$ 1.20
42	90 Day Labor Expense per DS1 Cable foot	$ 1.13		$ 1.13
43				
44	**DS3 Placement**			
45	Number of DS3 Cable Feet	94.77		94.77
46	Expense per DS3 Cable Foot	$ 0.89		$ 0.89
47	Number of DS3 Cable Terminations	1.00		1.00
48	45 Day Labor Expense per DS3 Cable foot	$ 0.54		$ 0.54
49	90 Day Labor Expense per DS3 Cable foot	$ 0.51		$ 0.51
50				
51				

	K	L	M	N
1	Version 1.0 Created 6/3/02, 9:53:02 AM			
2	South Dakota			
3	**1.2 Entrance Enclosure (Standard Shared, Cross Connect, & Express)**			
4				
5		**Default Value**	**Overrides (sl)**	**This Run**
6				
7	Underground Fiber Cable Per Ft	$1.04		$1.04
8	Utility Hole	$6,487.54		$6,487.54
9	Cut & Replace Road Covering - Utility Hole	$1,977.60		$1,977.60
10	Cut & Replace Concrete Per Trench Ft. - Conduit	$12.36		$12.36
11	Backfill Utility Hole	$816.60		$816.60
12	Backfill Conduit Trench Per Trench Ft.	$5.21		$5.21
13	Conduit Per Ft.	$21.63		$21.63
14	Pumping Utility Hole	$499.96		$499.96
15	Pulling Fiber into Conduit Per Ft.	$1.36		$1.36
16	Innerduct Per Ft.	$2.66		$2.66
17	Fiber Cable Per Ft	$1.16		$1.16
18	Cable Rack Per Ft	$181.45		$181.45
19	Fiber Cable Splicing - Per Setup	$366.99		$366.99
20	Fiber Cable Splicing - Per Fiber Spliced	$16.32		$16.32
21	Fiber Distribution Panel	$1,394.72		$1,394.72
22	Single Fiber Jumper	$125.00		$125.00
23	Attenuator Per Fiber	$0.00		$0.00
24	Core Drill	$112.00		$112.00
25	Placing Fiber Cable on Cable Racking Per Ft	$2.39		$2.39
26	Distance from Manhole '0' to Cable Vault	108		108
27	Distance between Manhole 1 and Manhole '0'	302		302
28	Weighting of use of POI	$0.10		10%
29	Weighting of use of Existing Manhole = (1-%POI)	$0.90		90%
30				
31				
32				
33				
34				
35				
36				
37				
38				
39				
40				
41				
42				
43				
44				
45				
46				
47				
48				
49				
50				
51				

	P	Q	R	S	T
1	Version 1.0 Created 6/3/02, 9:53:02 AM				
2	South Dakota				
3	**1.2 Entrance Enclosure**				
4					
5		**Default Value**	**Overrides (sl)**	**This Run**	
6	**Shared Entrance Enclosure**				
7	Distance from POI to USW Manhole '0' (feet)	50		50	
8	Fibers required per Collocator	18		18	
9	Collocators per Utility Hole/Conduit/CO	3		3	
10	Core Drills per manhole	2		2	
11	Number of Fiber Splice Setup	2		2	
12	Number of fibers spliced per CLEC	18		18	
13	Distance for New Cable Racking	20		20	
14	Distance Shared Cable Racking	130		130	
15					
16	**Cross Connect Entrance Enclosure**				
17	Distance from POI to USW Manhole '0' (feet)	50		50	
18	Fibers required per Collocator	18		18	
19	Collocators per Utility Hole/Conduit/CO	3		3	
20	Core Drills per central office	2		2	
21	Number of Fiber Splice Setup	2		2	
22	Number of fibers spliced per CLEC	18		18	
23	Number of Fiber Distribution Panel	2		2	
24	Distance of New Cable Racking	20		20	
25	Distance of Shared Cable Racking	130		130	
26					
27	**Express Entrance Enclosure**				
28	Distance from POI to Manhole '0' (feet)	50		50	
29	Core Drills per central office	2		2	
30	Collocators per Utility Hole/Conduit/CO	3		3	
31	Distance from POI to Cable Vault (feet)	150		150	
32	Distance for New Cable Racking	20		20	
33	Distance for Existing Cable Racking	130		130	
34					
35					
36					
37					
38					
39					
40					
41					
42					
43					
44					
45					
46					
47					
48					
49					
50					
51					

	U	V	W	X	Y	Z	AA	AB	A
1	Version 1.0 Created 6/3/02, 9:53:02 AM								
2	South Dakota								
3	**2 Overall Aerial Support - Cageless**								
4			**Major Jobs**				**Minor Jobs**		
5		Default Value	Overrides (sl)	This Run		Default Value	Overrides (sl)	This Run	
6	**Aux Frame Channel**								
7	Aux Frame Channel - Number of 10 foot channels	60		60		7		7	
8	Aux Frame Channel - Number of 20 foot channels	7		7		1		1	
9	Aux Frame Channel - Expense per 10 foot channels	$ 18.00		$ 18.00		$ 12.94		$ 12.94	
10	Aux Frame Channel - Expense per 20 foot channel	$ 50.10		$ 50.10		$ 38.05		$ 38.05	
11	Aux Frame Channel - 45 Day Labor Expense per foot	$ 12.60		$ 12.60		$ 12.60		$ 12.60	
12	Aux Frame Channel - 90 Day Labor Expense per foot	$ 11.91		$ 11.91		$ 11.91		$ 11.91	
13									
14	**U Channel**								
15	U Channel - Number of U Channels	1		1		0		0	
16	U Channel - Expense per U Channel	$123.25		$123.25		$ -		$ -	
17	U Channel - 45 Day Labor Expense per foot	$ 20.34		$ 20.34		$ 20.34		$ 20.34	
18	U Channel - 90 Day Labor Expense per foot	$ 19.22		$ 19.22		$ 19.22		$ 19.22	
19									
20	**Other**								
21	Number of Aux Frame Fittings	28.79		28.79		3.56		3.56	
22	Expense per Aux Frame Fitting	$ 20.27		$ 20.27		$ 19.23		$ 19.23	
23	Number of Aux Frames Support	68.47		68.47		18.44		18.44	
24	Expense per Aux Frame Support	$ 6.90		$ 6.90		$ 5.06		$ 5.06	
25	Number of Aux Frame Nuts and Bolts	140.47		140.47		8.13		8.13	
26	Expense of Aux Frame Nuts and Bolts	$ 0.39		$ 0.39		$ 0.29		$ 0.29	
27	Number of Cable Racks Support	0.21		0.21		0		0	
28	Expense per Cable Rack Support	$ 24.19		$ 24.19		$ -		$ -	
29	Amount of Insulation	5.47		5.47		0.875		0.875	
30	Expense per Insulation	$ 2.63		$ 2.63		$ 2.42		$ 2.42	
31	Number of Miscellaneous Items	17.47		17.47		0.125		0.125	
32	Expense per miscellaneous item	$ 11.24		$ 11.24		$ 6.58		$ 6.58	
33	Number of Nuts and Bolts - cable racking	0.42		0.42		0.25		0.25	
34	Expense of Nuts and Bolts - cable racking	$ 0.52		$ 0.52		$ 0.52		$ 0.52	
35	Number of General Support items	1.58		1.58		0		0	
36	Expense of General Support items	$ 1.95		$ 1.95		$ -		$ -	
37	Number of U-Channel - Other Items	0.58		0.58		7.5		7.5	
38	Expense of U-Channel - Other Items	$ 18.46		$ 18.46		$ 2.18		$ 2.18	
39	Number of U-Channel Fittings	0		0		0.25		0.25	
40	Expense of U-Channel Fitting	$ -		$ -		$ 2.78		$ 2.78	
41									
42									
43									
44									
45									
46									
47									
48									
49									
50									
51									

	AD	AE	AF	AG	AI	AJ	AK
1	Version 1.0 Created 6/3/02, 9:53:02 AM						
2	South Dakota						
3	**2 Cable Racking - Cageless**						
4		**Major Jobs**			**Minor Jobs**		
5		Default Value	Overrides (sl)	This Run	Default Value	Overrides (sl)	This Run
6	**Cable Racking Channel**						
7	Number of Channels	9.5		9.5	1.3		1.3
8	Expense per Channel	$ 74.52		$74.52	$ 69.17		$ 69.17
9	45 Day Labor Expense per Channel	$ 22.57		$22.57	$ 22.57		$ 22.57
10	90 Day Labor Expense per Channel	$ 21.32		$21.32	$ 21.32		$ 21.32
11							
12	**Cable Racking Ladder**						
13	Number of Ladders	1.6		1.6	0.1		0.1
14	Expense per Ladder	$ 29.24		$29.24	$ 23.76		$ 23.76
15	45 Day Labor Expense per Ladder	$ 22.57		$22.57	$ 22.57		$ 22.57
16	90 Day Labor Expense per Ladder	$ 21.32		$21.32	$ 21.32		$ 21.32
17							
18	**Horn**						
19	Number of Horns	29.3		29.3	2.4		2.4
20	Expense per Horn	$ 13.93		$13.93	$ 15.70		$ 15.70
21	45 Day Labor Expense per Horn	$ 6.64		$ 6.64	$ 6.64		$ 6.64
22	90 Day Labor Expense per Horn	$ 6.27		$ 6.27	$ 6.27		$ 6.27
23							
24	**Pan**						
25	Amount of Pan	7.2		7.2	1.4		1.4
26	Expense for Pan	$ 26.31		$26.31	$ 28.77		$ 28.77
27	45 Day Labor Expense per Pan	$ 12.98		$12.98	$ 12.98		$ 12.98
28	90 Day Labor Expense per Pan	$ 12.27		$12.27	$ 12.27		$ 12.27
29							
30	**Other**						
31	Number of Systems Ladders	10.6		10.6	1		1
32	Expense per Systems Ladder	$ 4.91		$ 4.91	$ 2.65		$ 2.65
33	Number of Brackets	17.7		17.7	10.8		10.8
34	Expense per Bracket	$ 12.05		$12.05	$ 13.60		$ 13.60
35	Number of Fittings	51.1		51.1	35		35
36	Expense per Fitting	$ 8.04		$ 8.04	$ 6.84		$ 6.84
37	Number of Insulators	3.7		3.7	1.6		1.6
38	Expense per Insulator	$ 1.04		$ 1.04	$ 0.64		$ 0.64
39	Number of Cable Racking Kits	9.1		9.1	3.8		3.8
40	Expense per Cable Racking Kit	$ 60.01		$60.01	$ 48.92		$ 48.92
41	Number of Miscellaneous Items	142.7		142.7	40		40
42	Expense per Miscellaneous Item	$ 0.10		$ 0.10	$ 0.02		$ 0.02
43	Number of Support Items	33.4		33.4	8.2		8.2
44	Expense per Support Item	$ 7.55		$ 7.55	$ 6.14		$ 6.14
45	Number of Nuts and Bolts	16.8		16.8	20.1		20.1
46	Expense per set of Nuts and Bolts	$ 0.47		$ 0.47	$ 0.49		$ 0.49
47							
48							
49							
50							
51							

	AM	AN	AO	AP
1	Version 1.0 Created 6/3/02, 9:53:02 AM			
2	South Dakota			
3	**2 Bay Support Construction - Cageless**			
4				
5		Default Value	Overrides (sl)	This Run
6	**Bay**			
7	Number of Bays	7.5		7.5
8	Expense per Bay	$279.71		$ 279.71
9	45 Day Labor Expense per 1st Bay	$438.08		$ 438.08
10	45 Day Labor Expense add'l Bay	$320.48		$ 320.48
11	90 Day Labor Expense per Bay	$413.90		$ 413.90
12	90 Day Labor Expense add'l Bay	$302.79		$ 302.79
13				
14	**AC Outlet**			
15	Number of AC Outlets	2.25		2.25
16	Expense per AC Outlet	$ 94.05		$ 94.05
17	45 Day Labor Expense per Outlet	$ 88.12		$ 88.12
18	90 Day Labor Expense per Outlet	$ 83.26		$ 83.26
19				
20	**End Guard**			
21	Number of End Guards	3.5		3.5
22	Expense per End Guard	$363.51		$ 363.51
23	45 Day Labor Expense per End Guard	$ 43.89		$ 43.89
24	90 Day Labor Expense per End Guard	$ 41.46		$ 41.46
25				
26	**Other**			
27	Number of Anchor Bolts	16.5		16.5
28	Expense per Anchor Bolt Set	$ 27.15		$ 27.15
29	Number of Filler Panels	2.875		2.875
30	Expense per Filler Panel	$198.08		$ 198.08
31	Number of Guard Rails	5		5
32	Expense per Guard Rail	$ 66.56		$ 66.56
33	Number of Mountings	28.25		28.25
34	Expense per Mounting	$ 82.91		$ 82.91
35	Number of Miscellaneous Items	12.75		12.75
36	Expense per Miscellaneous Item	$ 0.40		$ 0.40
37				
38				
39				
40				
41				
42				
43				
44				
45				
46				
47				
48				
49				
50				
51				

	AR	AS	AT	AU	A
1	Version 1.0 Created 6/3/02, 9:53:02 AM				
2	South Dakota				
3	**2 Lighting - Cageless**				
4					
5		**Default Value**	**Overrides (sl)**	**This Run**	
6	**Fixtures**				
7	Number of Fixtures	2.56		2.56	
8	Expense per Fixture	$111.70		$ 111.70	
9	45 Day Labor Expense per Fixture	$214.19		$ 214.19	
10	90 Day Labor Expense per Fixture	$202.37		$ 202.37	
11					
12	**Lighting**				
13	Number of Lights	1.71		1.71	
14	Expense per Light	$103.96		$ 103.96	
15	45 Day Labor Expense per Light	$214.19		$ 214.19	
16	90 Day Labor Expense per Light	$202.37		$ 202.37	
17					
18	**Cable**				
19	Number of Cables	13.66		13.66	
20	Expense per Cable	$ 0.37		$ 0.37	
21	45 Day Labor Expense per 4 Cables	$ 2.50		$ 2.50	
22	90 Day Labor Expense per 4 Cables	$ 2.36		$ 2.36	
23					
24	**Conduit Support**				
25	Number of Conduit Supports	0.05		0.05	
26	Expense per Conduit Support	$248.19		$ 248.19	
27	45 Day Labor Expense per foot Conduit Supp	$ 18.61		$ 18.61	
28	90 Day Labor Expense per foot Conduit Supp	$ 17.58		$ 17.58	
29					
30	**Wire**				
31	Number of Wires	17.07		17.07	
32	Expense per Wire	$ 0.25		$ 0.25	
33	45 Day Labor Expense per Wire	$ 2.39		$ 2.39	
34	90 Day Labor Expense per Wire	$ 2.26		$ 2.26	
35					
36					
37	**Other**				
38	Number of Conduit Supports - Other	0.29		0.29	
39	Expense per Conduit Support - Other	$ 0.11		$ 0.11	
40	Number of Outlet Raceways	2.27		2.27	
41	Expense per Outlet Raceway	$ 44.11		$ 44.11	
42	Number of Supports	8.15		8.15	
43	Expense per Support	$ 8.42		$ 8.42	
44	Number of Switches	1.20		1.20	
45	Expense per Switch	$ 97.81		$ 97.81	
46	Number of Fittings	8.73		8.73	
47	Expense per Fitting	$ 4.74		$ 4.74	
48	Number of Fitting Supports	0.73		0.73	
49	Expense per Fitting Supports	$ 13.67		$ 13.67	
50	Number of Miscellaneous Items	5.22		5.22	
51	Expense per Miscellaneous Item	$ 0.27		$ 0.27	

	AW	AX	AY	AZ	B
1	Version 1.0 Created 6/3/02, 9:53:02 AM				
2	South Dakota				
3	**2.1 & 3.1 Cable Hole**				
4					
5		**Default Value**	**Overrides (sl)**	**This Run**	
6	**Fire Stop**				
7	Number of Fire Stop	0.83		0.83	
8	Expense per Fire Stop	$ 1.36		$ 1.36	
9	45 Day Labor Expense per Fire Stop	$ 265.37		$ 265.37	
10	90 Day Labor Expense per Fire Stop	$ 250.72		$ 250.72	
11					
12	**Other**				
13	Number of Bags	0.24		0.24	
14	Expense per Bag	$ 29.34		$ 29.34	
15	Number of Labels	1.02		1.02	
16	Expense per Label	$ 0.22		$ 0.22	
17	Amount of Putty	1.73		1.73	
18	Expense of Putty	$ 27.02		$ 27.02	
19	Number of Sheets	0.37		0.37	
20	Expense per Sheet	$ 69.55		$ 69.55	
21	Amount of Tape	0.07		0.07	
22	Expense of Tape	$ 188.83		$ 188.83	
23	Number of miscellaneous items	0.44		0.44	
24	Expense per miscellaneous item	$ 2.64		$ 2.64	
25					
26					
27					
28					
29					
30					
31					
32					
33					
34					
35					
36					
37					
38					
39					
40					
41					
42					
43					
44					
45					
46					
47					
48					
49					
50					
51					

	BB	BC	BD	BE	B
1	Version 1.0 Created 6/3/02, 9:53:02 AM				
2	South Dakota				
3	**2.1 Cageless Miscellaneous Inputs**				
4					
5		Default Value	Overrides (sl)	This Run	
6	**Fiber Duct**				
7	Number of Ducts	0.20		0.20	
8	Expense per Duct	$ 3.06		$ 3.06	
9	45 Day Labor Expense per Duct	$ 18.13		$ 18.13	
10	90 Day Labor Expense per Duct	$ 17.13		$ 17.13	
11					
12	**Other**				
13	Number of Misc Materials	0.95		0.95	
14	Expense for Misc Materials	803.17872		803.17872	
15	Number of Bolt Kits	0.02		0.02	
16	Expense per Bolt Kit	$ 7.53		$ 7.53	
17	Number of Eqpt Nuts and Bolts	0.17		0.17	
18	Expense for Eqpt Nuts and Bolts	$ 5.71		$ 5.71	
19	Number of General Nuts and Bolts	17.12		17.12	
20	Expense for General Nuts and Bolts	$ 0.40		$ 0.40	
21	Amount of Paint	1.29		1.29	
22	Expense for Paint	$ 8.66		$ 8.66	
23	Number of Tags	2.02		2.02	
24	Expense per Tag	$ 2.86		$ 2.86	
25	Amount of Tape	0.34		0.34	
26	Expense for Tape	$ 9.92		$ 9.92	
27	Number of Miscellaneous Items	5.49		5.49	
28	Expense per Miscellaneous Item	$ 104.78		$ 104.78	
29					
30					
31					
32					
33					
34					
35					
36					
37					
38					
39					
40					
41					
42					
43					
44					
45					
46					
47					
48					
49					
50					
51					

	BG	BH	BI	BJ	E
1	Version 1.0 Created 6/3/02, 9:53:02 AM				
2	South Dakota				
3	**2 Grounding - Cageless**				
4					
5		**Default Value**	**Overrides (sl)**	**This Run**	
6	**1/0 Cable**				
7	1/0 Cable Footage	0.98		0.98	
8	Expense per foot of 1/0 Cable	$ 3.12		$ 3.12	
9	45 Day Labor Expense per foot of 1/0 Cable	$ 1.92		$ 1.92	
10	90 Day Labor Expense per foot of 1/0 Cable	$ 1.81		$ 1.81	
11					
12	**# 2 Cable**				
13	#2 Cable Footage	34.88		34.88	
14	Expense per foot of #2 Cable	$ 1.56		$ 1.56	
15	45 Day Labor Expense per foot of #2 Cable	$ 0.62		$ 0.62	
16	90 Day Labor Expense per foot of #2 Cable	$ 0.59		$ 0.59	
17					
18	**4/0 Cable**				
19	4/0 Cable Footage	33.66		33.66	
20	Expense per foot of 4/0 Cable	$ 2.11		$ 2.11	
21	45 Day Labor Expense per foot of 4/0 Cable	$ 3.64		$ 3.64	
22	90 Day Labor Expense per foot of 4/0 Cable	$ 3.44		$ 3.44	
23					
24	**# 6 Cable**				
25	#6 Cable Footage	0.61		0.61	
26	Expense per foot of #6 Cable	$ 0.67		$ 0.67	
27	45 Day Labor Expense per foot of #6 Cable	$ 0.62		$ 0.62	
28	90 Day Labor Expense per foot of #6 Cable	$ 0.59		$ 0.59	
29					
30	**750 Cable**				
31	750 Cable Footage	10.85		10.85	
32	Expense per foot of 750 Cable	$ 8.80		$ 8.80	
33	45 Day Labor Expense per foot of 750 Cable	$ 14.36		$ 14.36	
34	90 Day Labor Expense per foot of 750 Cable	$ 13.57		$ 13.57	
35					
36	**Ground Bar**				
37	Number of Ground Bars	0.05		0.05	
38	Expense per Ground Bar	$ 124.92		$ 124.92	
39	45 Day Labor Expense per Ground Bar	$ 234.25		$ 234.25	
40	90 Day Labor Expense per Ground Bar	$ 221.32		$ 221.32	
41					
42	**Alternative Racking**				
43	Amount of Alternative Racking	1.07		1.07	
44	Expense of Alternative Racking	$ 6.87		$ 6.87	
45					
46					
47					
48					
49					
50					
51					

	BL	BM	BN	BO	BP
1	Version 1.0 Created 6/3/02, 9:53:02 AM				
2	South Dakota				
3	**3.1 Caged Expense Inputs**				
4					
5		Default Value	Overrides (sl)	This Run	
6	**Fence**				
7	Fence - 100 sf	$ 3,970.00		$ 3,970.00	
8	Fence - 200 sf	$ 4,950.00		$ 4,950.00	
9	Fence - 300 sf	$ 5,560.00		$ 5,560.00	
10	Fence - 400 sf	$ 6,140.00		$ 6,140.00	
11					
12	**HVAC**				
13	HVAC - 100 sf	$ 713.00		$ 713.00	
14	HVAC - 200 sf	$ 854.00		$ 854.00	
15	HVAC - 300 sf	$ 1,071.00		$ 1,071.00	
16	HVAC - 400 sf	$ 1,596.00		$ 1,596.00	
17					
18	**Electrical Distrtribution**				
19	Electrical Distrtribution - 100 sf	$ 4,341.00		$ 4,341.00	
20	Electrical Distrtribution - 200 sf	$ 4,379.00		$ 4,379.00	
21	Electrical Distrtribution - 300 sf	$ 4,398.00		$ 4,398.00	
22	Electrical Distrtribution - 400 sf	$ 4,416.00		$ 4,416.00	
23					
24	**Lighting**				
25	Lighting - 100 sf	$ 679.00		$ 679.00	
26	Lighting - 200 sf	$ 932.00		$ 932.00	
27	Lighting - 300 sf	$ 1,184.00		$ 1,184.00	
28	Lighting - 400 sf	$ 1,437.00		$ 1,437.00	
29					
30					
31					
32					
33					
34					
35					
36					
37					
38					
39					
40					
41					
42					
43					
44					
45					
46					
47					
48					
49					
50					
51					

	BQ	BR	BS	BT	BV	BW	BX
1	Version 1.0 Created 6/3/02, 9:53:02 AM						
2	South Dakota						
3	**3 Cable Racking - Caged**						
4			**Major Jobs**			**Minor Jobs**	
5		Default Value	Overrides (sl)	This Run	Default Value	Overrides (sl)	This Run
6	**Cable Racking Channel**						
7	Number of Channels	8		8	2.5		2.5
8	Expense per Channel	$ 74.52		$ 74.52	$ 69.17		$ 69.17
9	45 Day Labor Expense per Channel	$ 22.57		$ 22.57	$ 22.57		$ 22.57
10	90 Day Labor Expense per Channel	$ 21.32		$ 21.32	$ 21.32		$ 21.32
11							
12	**Horn**						
13	Number of Horns	24.6		24.6	4.6		4.6
14	Expense per Horn	$ 13.93		$ 13.93	$ 15.70		$ 15.70
15	45 Day Labor Expense per Horn	$ 6.64		$ 6.64	$ 6.64		$ 6.64
16	90 Day Labor Expense per Horn	$ 6.27		$ 6.27	$ 6.27		$ 6.27
17							
18	**Pan**						
19	Amount of Pan	6.0		6.0	2.7		2.7
20	Expense for Pan	$ 26.31		$ 26.31	$ 28.77		$ 28.77
21	45 Day Labor Expense per Pan	$ 12.98		$ 12.98	$ 12.98		$ 12.98
22	90 Day Labor Expense per Pan	$ 12.27		$ 12.27	$ 12.27		$ 12.27
23							
24	**Other**						
25	Number of Systems Ladders	8.9		8.9	1.2		1.2
26	Expense per Systems Ladder	$ 4.91		$ 4.91	$ 2.65		$ 2.65
27	Number of Brackets	14.9		14.9	20.8		20.8
28	Expense per Bracket	$ 12.05		$ 12.05	$ 13.60		$ 13.60
29	Number of Fittings	43.0		43.0	67.3		67.3
30	Expense per Fitting	$ 8.04		$ 8.04	$ 6.84		$ 6.84
31	Number of Insulators	3.1		3.1	3.1		3.1
32	Expense per Insulator	$ 1.04		$ 1.04	$ 0.64		$ 0.64
33	Number of Cable Racking Kits	7.7		7.7	7.3		7.3
34	Expense per Cable Racking Kit	$ 60.01		$ 60.01	$ 48.92		$ 48.92
35	Number of Miscellaneous Items	120.2		120.2	76.9		76.9
36	Expense per Miscellaneous Item	$ 0.10		$ 0.10	$ 0.02		$ 0.02
37	Number of Support Items	28.1		28.1	15.8		15.8
38	Expense per Support Item	$ 7.55		$ 7.55	$ 6.14		$ 6.14
39	Number of Nuts and Bolts	14.2		14.2	38.7		38.7
40	Expense per set of Nuts and Bolts	$ 0.47		$ 0.47	$ 0.49		$ 0.49
41							
42							
43							
44							
45							
46							
47							
48							
49							
50							
51							

	BZ	CA	CB	CC	CE	CF	CG
1	Version 1.0 Created 6/3/02, 9:53:02 AM						
2	South Dakota						
3	**3 Overall Aerial Support - Caged**						
4			**Major Jobs**			**Minor Jobs**	
5		Default Value	Overrides (sl)	This Run	Default Value	Overrides (sl)	This Run
6	**Aux Frame Channel**						
7	Aux Frame Channel - Number of 10 foot channels	32		32	5		5
8	Aux Frame Channel - Number of 20 foot channels	16		16	3		3
9	Aux Frame Channel - Expense per 10 foot channels	$ 18.00		$ 18.00	$ 12.94		$ 12.94
10	Aux Frame Channel - Expense per 20 foot channel	$ 50.10		$ 50.10	$ 38.05		$ 38.05
11	Aux Frame Channel - 45 Day Labor Expense per foot	$ 12.60		$ 12.60	$ 12.60		$ 12.60
12	Aux Frame Channel - 90 Day Labor Expense per foot	$ 11.91		$ 11.91	$ 11.91		$ 11.91
13							
14	**U Channel**						
15	U Channel - Number of U Channels	1		1	0		0
16	U Channel - Expense per U Channel	$ 123.25		$ 123.25	$ -		$ -
17	U Channel - 45 Day Labor Expense per foot	$ 20.34		$ 20.34	$ 20.34		$ 20.34
18	U Channel - 90 Day Labor Expense per foot	$ 19.22		$ 19.22	$ 19.22		$ 19.22
19							
20	**Other**						
21	Number of Aux Frame Fittings	20.64		20.64	3.59		3.59
22	Expense per Aux Frame Fitting	$ 20.27		$ 20.27	$ 19.23		$ 19.23
23	Number of Aux Frames Support	49.09		49.09	18.59		18.59
24	Expense per Aux Frame Support	$ 6.90		$ 6.90	$ 5.06		$ 5.06
25	Number of Aux Frame Nuts and Bolts	100.72		100.72	8.19		8.19
26	Expense of Aux Frame Nuts and Bolts	$ 0.39		$ 0.39	$ 0.29		$ 0.29
27	Number of Cable Racks Support	0.15		0.15	0.00		0.00
28	Expense per Cable Rack Support	$ 24.19		$ 24.19	$ -		$ -
29	Amount of Insulation	3.92		3.92	0.88		0.88
30	Expense per Insulation	$ 2.63		$ 2.63	$ 2.42		$ 2.42
31	Number of Miscellaneous Items	12.53		12.53	0.13		0.13
32	Expense per miscellaneous item	$ 11.24		$ 11.24	$ 6.58		$ 6.58
33	Number of Nuts and Bolts - cable racking	0.30		0.30	0.25		0.25
34	Expense of Nuts and Bolts - cable racking	$ 0.52		$ 0.52	$ 0.52		$ 0.52
35	Number of General Support items	1.13		1.13	0.00		0.00
36	Expense of General Support items	$ 1.95		$ 1.95	$ -		$ -
37	Number of U-Channel - Other Items	1.06		1.06	7.56		7.56
38	Expense of U-Channel - Other Items	$ 18.46		$ 18.46	$ 2.18		$ 2.18
39	Number of U-Channel Fittings	0.00		0.00	0.25		0.25
40	Expense of U-Channel Fitting	$ -		$ -	$ 2.78		$ 2.78
41							
42							
43							
44							
45							
46							
47							
48							
49							
50							
51							

Cell: A15
nment: Sales tax is applied to equipment and material in all states that have a sales tax. However, in some of these states the full billed amount of contra is subject to sales tax. The default is yes in those states where tax on the total contract is applicable. This sets the variable Tax_On_Labor to the value "1". Thoughout the workbook Tax_On_Labor is used inside "If" statements to determine the use of sales tax.

Cell: K28
nment: The Total of POI and existing Manhole weighting must equal 100%, If one is overridden and the other is not, adjustments will be made to the one is not overriden to make the total equal 100%. If both are overriden, existing Manhole will be calculated to be equal to 1 - POI.

Cell: A37
nment: See the Enhanced Non-Recurring Cost Model for detailed documentation to QPF.

	A	C	D
1	Version 1.0 Created 6/3/02, 9:53:02 AM		
2	South Dakota		
3		**90 Days**	**Monthly Maintenance**
4			
5		Direct Expenses	Direct Expenses
7	**1.1 Standard Collocation**	sE p5 cC&H	cC*sG cF377C/12
10	DS0 Terminations (100)		
11	Placement of Cable	$ 158.25	$ 0.0890
12	Cable	$ 239.64	$ 0.1348
13	Block	$ 415.05	$ 0.2335
14	Placement of Block	$ 165.69	$ 0.0932
17	DS0 Terminations (1)		
18	Placement of Cable	$ 2.97	$ 0.0017
19	Cable	$ 3.28	$ 0.0018
20	Block	$ 5.69	$ 0.0032
21	Placement of Block	$ 2.27	$ 0.0013
24	DS1 Terminations (28)		cC*sG cF357C/12
25	Placement of Cable	$ 275.67	$ 0.5105
26	Cable	$ 276.63	$ 0.5123
27	Panel	$ 189.76	$ 0.3514
28	Placement of Panel	$ 56.35	$ 0.1044
31	DS1 Terminations (1)		
32	Placement of Cable	$ 29.64	$ 0.0549
33	Cable	$ 29.74	$ 0.0551
34	Panel	$ 22.79	$ 0.0422
35	Placement of Panel	$ 6.06	$ 0.0112
38	DS3 Terminations (1)		
39	Placement of Cable	$ 102.11	$ 0.1891
40	Cable	$ 178.63	$ 0.3308
41	Connector	$ 181.62	$ 0.3364
42	Placement of Connector	$ 14.08	$ 0.0261
45	**2.1 Cageless Collocation**	sE p5 sum C25:C47	cC*sG cF357C/12
48	Standard Space Construction Charge	$ 15,126.62	
49	Earthquake Zone Addition	$ -	
50	Standard Space Construction Charge With Earthquake Addition in earthquake states	$ 15,126.62	$ 28.0143
53	Additional Bays-Per Bay	sE p5 sum E30:E47	
54	Without earthquake Addition	$ 335.03	
55	Earthquake Zone Addition	$ -	
56	Additional Bay Expense With Earthquake Addition in earthquake states	$ 335.03	$ 0.6205
66	DC Power Cables	sE p56 r18	cC*sG cF357C/12
67	20 AMP	$3,211	$ 5.9474
68	30 AMP	$3,656	$ 6.7716
69	40 AMP	$4,416	$ 8.1785
70	60 AMP	$7,821	$ 14.4844
71	100 AMP	$13,191	$ 24.4298
72	200 AMP	$24,555	$ 45.4758

	A	C	D
1	Version 1.0 Created 6/3/02, 9:53:02 AM		
2	South Dakota		
3		**90 Days**	**Monthly Maintenance**
4			
5		Direct Expenses	Direct Expenses
73	300 AMP	$38,612	$ 71.5081
74	400 AMP	$54,823	$ 101.5321
77	**3.1 Caged Collocation**	sE p6 sum C55:78 by Size	
80	Standard Space Construction Charge		
81	Cage - up to 100 sq feet	$ 26,291.23	$ 48.6911
82	Cage - up to 200 sq feet	$ 23,324.23	$ 43.1962
83	Cage - up to 300 sq feet	$ 28,801.23	$ 53.3396
84	Cage - up to 400 sq feet	$ 30,177.23	$ 55.8879
86	Standard Space Construction Charge - Fencing Credit		
87	Cage - up to 100 sq feet	$ (3,970.00)	$ (7.3524)
88	Cage - up to 200 sq feet	$ (4,950.00)	$ (9.1673)
89	Cage - up to 300 sq feet	$ (5,560.00)	$ (10.2971)
90	Cage - up to 400 sq feet	$ (6,140.00)	$ (11.3712)
98	DC Power Cables	sE p74 r18	
99	20 A	$ 3,992.54	$ 7.3941
100	30 A	$ 4,397.68	$ 8.1445
101	40 A	$ 5,258.55	$ 9.7388
102	60 A	$ 8,680.55	$ 16.0763
103	100 A	$ 14,126.45	$ 26.1620
104	200 A	$ 26,296.24	$ 48.7004
105	300 A	$ 41,349.32	$ 76.5785
106	400 A	$ 58,710.55	$ 108.7313
109	Ground Wire (per foot)	sE p6 C87 to C92	
110	# 2 AWG	6.874403339	$ 0.0127
111	1/0 AWG	12.10471173	$ 0.0224
112	4/0 AWG	14.23987902	$ 0.0264
113	350 kcmil	18.38056006	$ 0.0340
114	500 kcmil	21.27352239	$ 0.0394
115	750 kcmil	32.43097367	$ 0.0601
116			

	A	B	C	D	E
1	Version 1.0 Created 6/3/02, 9:53:02 AM				
2	South Dakota				
3					
4			Direct Expense - Initial Charge	Investment	Monthly Maintenance on Expense Items
5	**1.2 Entrance Facility**				
6		Standard Shared Entrance Facility	sE p15	sE p16	cC * sG c7 by Acct
7		4C	$59.24	$364.17	$0.04
8		85C	$99.20		$0.16
9		257C	$101.12	$17.30	$0.06
10		357C	$213.90		$0.40
11		Cross Connect Entrance Facility	sE p24	sE p25	
12		4C	$59.24	$364.17	$0.04
13		85C	$99.20		$0.16
14		257C	$101.12	$17.30	$0.06
15		357C	$295.76		$0.55
16		Express Entrance Facility	sE p31	sE p31	
17		4C	$5,640.31	$6,366.44	$3.40
18		257C	$1,277.89	$311.49	$0.77
19	**1.3 Fiber Splicing**		sE p33 cC		
20		Per Setup	$363.40		
21		Per Fiber Spliced	$27.50		
22	**1.4.3 Backup AC Feed - Per Foot**		sE p37 r17&28		cC*sG cF357C/12
23		20 Amp, Single Phase	$5.78		$0.0107
24		20 Amp, Three Phase	$7.17		$0.0133
25		30 Amp, Single Phase	$6.24		$0.0115
26		30 Amp, Three Phase	$8.56		$0.0159
27		40 Amp, Single Phase	$7.33		$0.0136
28		40 Amp, Three Phase	$10.09		$0.0187
29		50 Amp, Single Phase	$8.70		$0.0161
30		50 Amp, Three Phase	$12.15		$0.0225
31		60 Amp, Single Phase	$9.84		$0.0182
32		60 Amp, Three Phase	$13.98		$0.0259
33		100 Amp, Single Phase	$12.18		$0.0226
34		100 Amp, Three Phase	$19.02		$0.0352

	A	B	C	D	E
1	Version 1.0 Created 6/3/02, 9:53:02 AM				
2	South Dakota		Investments	Direct Expenses	Sheet Source
3	**1.4 Power Usage**				
4	**Power Plant per Amp Ordered Less than 60 AMPS**		$448.23		E. Power Equipment sE p35
5	**Power Usage-Less than 60 AMPS per Amp Ordered**		$349.22		E. Power Equipment sE p35
6	**Power Usage - Per Amp**				E. Power Usage
7		20, 30, 40 & 60 Amp		$1.61	sE p35
8		100, 200, 300, & 400 Amp		$3.22	
9	**Backup AC Power - Per Amp**				E. Backup AC Power Usage
10	357C	120 V	$300.37	$8.44	sE p38 cF
11	357C	208 V, Single Phase	$520.64	$14.62	
12	357C	208 V, Three Phase	$900.70	$25.30	
13	357C	240 V, Single Phase	$600.74	$16.87	
14	357C	240 V, Three Phase	$1,039.27	$29.19	
15	357C	480 V, Three Phase	$2,078.55	$58.38	
16	**1.5 Security - Per Person**				sE p40
17	361C	ID Cards	$9.57		E. Security - Per Person
18		Hours Badging		$0.41	E. Security - Per Person
19		Card Access per Office	$250.00		
20	**1.6 CO Synchronization**				E. CO Synchroniation
21	357C		$303.69		sE p41 D37
22	**1.7 ITP - Per Termination**				E. ITP
23	377C	DS0	$19.18		sE p42 r40
24	357C	DS1	$52.16		
25	357C	DS3	$623.15		
26	**2.2, 3.3 Space Rent**				E. Space Rent
27		Land	$7.20		sE p72 cC
28		Building	$163.24		

	A	C	E	F	H
1	Version 1.0 Created 6/3/02, 9:53:02 AM				
2	South Dakota	Standard Configuration 90 Day	Additional Bay/Power 90 Day		Standard Configuration 90 Day
3					
4					
5	**Standard Collocation**				
6					
7					sE p8 cO+P * Sale
8	DS0 Terminations (100)	sE p7 cG+H * Sales tax		DS0 Terminations (1)	
9	Placement of Cable	$ 158.25		Placement of Cable	$ 2.97
10	Cable	$ 239.64		Cable	$ 3.28
11	Block	$ 415.05		Block	$ 5.69
12	Placement of Block	$ 165.69		Placement of Block	$ 2.27
13					sE p8 cQ * Sales t
14	DS1 Terminations (28)	sE p7 cI * Sales tax		DS1 Terminations (1)	
15	Placement of Cable	$ 275.67		Placement of Cable	$ 29.64
16	Cable	$ 276.63		Cable	$ 29.74
17	Panel	$ 189.76		Panel	$ 22.79
18	Placement of Panel	$ 56.35		Placement of Panel	$ 6.06
19					
20	DS3 Terminations (1)	sE p7 cJ * Sales tax			
21	Placement of Cable	$ 102.11			
22	Cable	$ 178.63			
23	Panel/Connector	$ 181.62			
24	Placement of Panel/Connect	$ 14.08			
25		sE p46 C46			
26	Cable Hole	$ 334.14			
28	Motor Vehicle	$ 228.52	sE p55 B39		
29		sE p54 C61	sE p54 C63		
30	Miscellaneous	$ 458.91	$ 229.46		
31					
32					
33	**Cageless Collocation**				
34					
37	Engineering	$ 10,432.32	sE p66 D48		
39	Ground Wire	$ 579.20	sE p49 r81		
41	Cable Racking (sE p70)	$ 2,709.39	$ 1,354.69		
43	Overall Aerial Support (sE p64)	$ 166.74	$ 83.37		
44					
45	Ground Bar (sE p51)	$ 6.23			
46					
47	Lighting (sE p60)	$ 211.16	$ 105.58		
48					
49	Bay Construction (sE p44)	$ 857.45	$ 428.72		
50					
51					
52	**Caged Collocation**				
53					
54	Cage	sD p12 cBO			
55	100 sq feet	$ 3,970.00			
56	200 sq feet	$ 4,950.00			
57	300 sq feet	$ 5,560.00			
58	400 sq feet	$ 6,140.00			
59					
60	HVAC	sD p12 cBO			
61	100 sq feet	$ 713.00			
62	200 sq feet	$ 854.00			
63	300 sq feet	$ 1,071.00			

	A	C	E	F	H
1	Version 1.0 Created 6/3/02, 9:53:02 AM				
2	South Dakota	Standard Configuration	Additional Bay/Power		Standard Configuration
3		90 Day	90 Day		90 Day
4					
64	400 sq feet	$ 1,596.00			
65					
66	Electrical	sD p12 cBO			
67	100 sq feet	$ 4,341.00			
68	200 sq feet	$ 4,379.00			
69	300 sq feet	$ 4,398.00			
70	400 sq feet	$ 4,416.00			
71					
74	Engineering	$ 10,432.32	sE p66 D48		
75					
76	Cable Racking	$ 5,782.51	sE p70 D111		
77					
78	Overall Aerial Support	$ 373.39	sE p64 D101		
79					
80	Lighting	sD p12 cBO			
81	100 sq feet	$ 679.00			
82	200 sq feet	$ 932.00			
83	300 sq feet	$ 1,184.00			
84	400 sq feet	$ 1,437.00			
85					
86	Ground Wire (per foot)	sE p76 r17			
87	# 2 AWG	$6.87			
88	1/0 AWG	$12.10			
89	4/0 AWG	$14.24			
90	350 kcmil	$18.38			
91	500 kcmil	$21.27			
92	750 kcmil	$32.43			

	A	F	G	H	I	J	K
1	Version 1.0 Created 6/3/02, 9:53:02 AM						
2	South Dakota			**Per Block**			
3				**90 Day**			
4			DS0		DS1	DS3	
5	**Material Description**		**410 Block**	**89 Block**	**56 ckts**		
6							
8	Average Expense Per Block/Panel		$ 376.00	$ 85.46	$ 317.25	$ 3,259.44	
10	# of Terminations Per Block/Panel		100.00	100.00	56.00	24.00	
12	Number of Blocks/Panels		0.9	0.1	0.5	0.04	
14	Total Price for Blocks/Panels (r8*r12)		$ 338.40	$ 8.55	$ 158.63	$ 135.81	
16	**Average Expense Per Termination**						
19	Labor						
20	Average Labor Expense Per Block/Panel		$ 156.84	$ 156.84	$ 106.69	$ 106.69	
22	Total Labor Expense (r20*r12)		$ 141.16	$ 15.68	$ 53.35	$ 4.45	
24	Average Labor Expense Per Termination						
27	Placement		$ 0.96	$ 0.96	$ 1.13	$ 0.51	
28	Number of Terminations		100.00	100.00	28.00	1.00	
29	# Terminations per cable		100	100	14.00	0.50	
30	Number of Cables		1.00	1.00	2.00	2.00	
31	# Feet		156.05	156.05	115.47	94.77	
32	Total Expense		**$ 134.82**	**$ 14.98**	**$ 260.95**	**$ 96.66**	
33	**Average Expense Per Termination**						
36	Connector Expense					**$ 8.50**	
37	Placement Connectors					**$ 4.44**	
38	Number of Connectors					**2.00**	
44							
49	Shipping		$ 52.60	$ 11.95	$ 22.19	$ 20.19	
51	Total		**$ 47.34**	**$ 1.20**	**$ 22.19**	**$ 20.19**	
52	Average Number of Terminations						
53	Average Expense Per Termination						
56							
58	**Cable Expense per Foot**		$ 1.45		$ 1.13	$ 0.89	
60	**Number of Feet**		156.05		115.47	94.77	
62	**Number of Cables**		1.00		2.00	2.00	
64	**Total Cable Expense**		**$ 226.85**		**$ 261.86**	**$ 169.10**	
66	**Number of Terminations**						
68	**Cable Expense per Termination**						

	A	O	P	Q
1	Version 1.0 Created 6/3/02, 9:53:02 AM			
2	South Dakota	**Per Termination**		
3		**90 Day**		
4		DS0		DS1
5	**Material Description**	**410 Block**	**89 Block**	**56 ckts**
6				
8	Average Expense Per Block/Panel	$ 376.00	$ 85.46	$ 317.25
10	# of Terminations Per Block/Panel	73.00	73.00	18.60
12	Number of Blocks/Panels	0.9	0.1	1
14	Total Price for Blocks/Panels (r8*r12)	$ 338.40	$ 8.55	$ 158.63
16	**Average Expense Per Termination**	**$ 4.64**	**$ 0.12**	**$ 17.06**
19	Labor			
20	Average Labor Expense Per Block/Panel	$ 156.84	$ 156.84	$ 106.69
22	Total Labor Expense (r20*r12)	$ 141.16	$ 15.68	$ 53.35
24	Average Labor Expense Per Termination	**$ 1.93**	**$ 0.21**	**$ 5.74**
27	Placement	$ 0.96	$ 0.96	$ 1.13
28	Number of Terminations	73.00	73.00	9.30
29	# Terminations per cable	100	100	14.00
30	Number of Cables	1.00	1.00	2.00
31	# Feet	156.05	156.05	115.47
32	Total Expense	$ 184.69	$ 20.52	$ 260.95
33	**Average Expense Per Termination**	**$ 2.53**	**$ 0.28**	**$ 28.06**
36	Connector Expense			
37	Placement Connectors			
38	Number of Connectors			
44				
49	Shipping	$ 52.60	$ 11.95	$ 44.38
51	Total	$ 47.34	$ 1.20	$ 44.38
52	Average Number of Terminations			
53	Average Expense Per Termination	**$ 0.65**	**$ 0.02**	**$ 4.77**
56				
58	**Cable Expense per Foot**	$ 1.45		$ 1.13
60	**Number of Feet**	156.05		115.47
62	**Number of Cables**	1.00		2.00
64	**Total Cable Expense**	$ 226.85		$ 261.86
66	**Number of Terminations**	73.00		9.30
68	**Cable Expense per Termination**	**$ 3.11**		**$ 28.16**

Cell: G2
Comment: Per Block

Assumptions

- 90% of all terminating blocks are 410 blocks. The remaining 10% are 89 blocks.
- One terminating block can accommodate 100 terminations.
- Terminating blocks will be charged to Collocators based on ordered terminations.

Calculation

- Block termination expenses = (90% * average expense of 410 blocks (from jobs) + (10% * average expense of 89 blocks (from jobs))/100 * total terminations.
- Expense per termination = Block termination expenses / total terminations

Cell: O2
Comment: Per Termination

Assumptions

- Terminations will run from CLEC space to IDF.
- IDF is located within 50 feet of the COSMIC frame.
- Total distance CLEC space to COSMIC taken is from planning documents.
- Design is based on assumption no spot bay exists.
- Number cable laid is derived from planning documents.
- Termination expenses assume economies of laying multiple cables at a time

Version 1.0 Created 6/3/02, 9:53:02 AM

South Dakota

STANDARD SHARED ENTRANCE ENCLOSURE

DIRECT EXPENSES/INVESTMENT

	Collocation Entrance Facility	1998 Expense	Expense X Sales Tax	FRC Code
1	Outside Fiber Cable Per Ft.	$1.04	$1.10	85C
2	Utility Hole Expense	$6,487.54	$6,853.44	4C
3	Cut & Replace Road Covering - Utility Hole	$1,977.60	$2,089.14	4C
4	Cut & Replace Concrete Per Trench Ft. - Conduit	$12.36	$13.06	4C
5	Backfill Utility Hole	$816.60	$816.60	4C
6	Backfill Conduit Trench Per Trench Ft.	$5.21	$5.21	4C
7	Conduit Expense Per Ft.	$21.63	$22.85	4C
8	Expense for Pumping Utility Hole	$499.96	$499.96	4C
9	Per Ft. Expense for Pulling Fiber in Conduit	$1.36	$1.36	4C
10	Innerduct Per Ft.	$2.66	$2.81	4C
11	Fiber Cable Per Ft.	$1.16	$1.23	257C
12	Fiber Cable Racking Per Ft	$181.45	$191.68	257C
13	Fiber Cable Splicing - Per Setup	$366.99	$387.69	85C
14	Fiber Cable Splicing - Per Fiber Spliced	$16.32	$16.32	85C
15	Fiber Distribution Panel	$1,394.72	$1,473.38	357C
16	Single Fiber Jumper	$125.00	$132.05	357C
17	Attenuator Per Fiber	$0.00	$0.00	357C
18	Core Drill	$112.00	$112.00	4C
19	Placing Fiber Cable on Cable Racking Per Ft	$2.39	$2.39	257C

ASSUMPTIONS

1	Distance from POI to USW Manhole '0' (feet)	50	
2	Fibers required per Collocator	18	Based on Average Order By CLEC
3	Collocators per Utility Hole/Conduit/CO	3	Average Based on Actual per Office
4	Core Drills per Manhole	2	One into the manhole and one out
5	Number of Fiber Splice Setup	2	
6	Number of fibers spliced per CLEC	18	Based on Average Order By CLEC
7	Distance from Manhole '0' to Cable Vault	108	Based on average from Actual distance measurements
8	Distance between Manhole 1 and Manhole '0'	302	Based on average from Actual distance measurements
9	Weighting of use of POI	10%	% of central offices in metro area utilized for collocation
10	Weighting of use of Existing Manhole = (1-%POI)	90%	% of central offices in all other areas utilized for collocation
11	Distance for New Cable Racking	20	Based on actuals from sample jobs
12	Distance Shared Cable Racking	130	Based on actuals from sample jobs
13	Distance from Cable Vault to CLEC Space	150	

CALCULATIONS

Expense

Utility Hole - POI

1	Utility Hole Expense	$6,853.44	See Direct Expense/Investment 2
2	Cut and Replace Road Covering	$2,089.14	See Direct Expense/Investment 3

Version 1.0 Created 6/3/02, 9:53:02 AM

South Dakota

STANDARD SHARED ENTRANCE ENCLOSURE

3	Backfill Utility Hole	$816.60	See Direct Expense/Investment 5
4	Total Utility Hole Expense	$9,759.17	Line 1 + Line 2 + Line 3
5	Number of Collocators per Utility Hole	3	See Assumption 3
6	Number of Fibers per Collocator	18	See Assumption 2
7	Utility Hole Expense Per Fiber	$180.73	Line 4/Line 5/Line 6
8	% Weighting	10%	See Assumption 9
9	Total Utility Hole Expense	$18.07	Line 7 X Line 8
	Conduit - POI		
1	Conduit Expense per Foot	$22.85	See Direct Expense/Investment 7
2	Cut and Replace Concrete per Trench Foot	$13.06	See Direct Expense/Investment 4
3	Backfill Conduit Trench per Trench Foot	$5.21	See Direct Expense/Investment 6
4	Total Conduit Expenses per Foot	$41.12	Line 1 + Line 2 + Line 3
5	Distance between POI and USW Manhole '0'	50	See Assumptions 1
6	Total Conduit Expense	$2,055.85	Line 4 X Line 5
7	Number of Collocators per Conduit	3	See Assumption 3
8	Number of Fibers per Collocator	18	See Assumption 2
9	Conduit Expense per Fiber	$38.07	Line 6/Line 7/Line 8
10	% of Weighting	10%	See Assumption 9
11	Total Conduit Expense per Fiber	$3.81	Line 9 X Line 10
	Innerduct - POI		
1	Innerduct Expense per Foot	$2.81	See Direct Expense/Investment 10
2	Pull Fiber from Utility Hole to Cable Vault Per Foot	$1.36	See Direct Expense/Investment 9
3	Total Innerduct Expense Per Foot	$4.17	Line 1 + Line 2
4	Distance between POI and USW Manhole '0'	50	See Assumption 1
5	Total Innerduct Expense	$208.50	Line 3 X Line 4
6	Pump Utility Hole Expense	$499.96	See Direct Expense/Investment 8
7	Total Expenses	$708.46	Line 5 + Line 6
8	Number of Fibers per Collocator	18	See Assumption 2
9	Innerduct Expense per Fiber	$39.36	Line 7/Line 8
10	% of Weighting	10%	See Assumption 9
11	Total Innerduct Expense per Fiber	$3.94	Line 9 X Line 10
	Cable (POI to Manhole '0')		
1	Fiber Cable Expense per Foot	$1.10	See Direct Expense/Investment 1
2	Distance between POI and USW Manhole '0'	50	See Assumption 1
3	Number of Fibers per Collocator	18	See Assumption 2
4	Cable Expense per Fiber	$3.05	(Line 1 X Line 2)/Line 3
5	% Weighting	10%	See Assumption 9
6	Total Cable Expense per Fiber	$0.31	Line 4 X Line 5
	Cable (Manhole '0' to Cable Vault)		
1	Fiber Cable Expense per Foot	$1.10	See Direct Expense/Investment 1
2	Distance between Manhole '0' and Cable Vault	108	See Assumption 7
3	Number of Fibers per Collocator	18	See Assumption 2
4	Cable Expense per Fiber	$6.59	(Line 1 X Line 2)/Line 3

Version 1.0 Created 6/3/02, 9:53:02 AM

South Dakota

STANDARD SHARED ENTRANCE ENCLOSURE

	Cable (Manhole 1 to Manhole '0')		
1	Fiber Cable Expense per Foot	$1.10	See Direct Expense/Investment 1
2	Distance between Manhole 1 and Manhole '0'	302	See Assumption 8
3	Number of Fibers per Collocator	18	See Assumption 2
4	Cable Expense per Fiber	$18.43	(Line 1 X Line 2)/Line 3
5	% Weighting	90%	See Assumption 10
6	Total Cable Expense per Fiber	$16.59	Line 4 x Line 5
	Pulling Fiber		
1	Pulling Fiber from Manhole '0' to Cable Vault	$1.36	See Direct Expense/Investment 9
2	Distance between Manhole '0' and Cable Vault	108	See Assumption 7
3	Total Expense from Manhole '0' to Cable Vault	$146.88	Line 1 X Line 2
4	Pulling Fiber from Manhole 1 to Manhole '0'	$1.36	See Direct Expense/Investment 9
5	Distance between Manhole 1 to Manhole '0'	302	See Assumption 8
6	Total Expense from Manhole 1 to Manhole '0'	$410.72	Line 4 X Line 5
7	% Weighting	90%	See Assumption 10
8	Total Expense from Manhole 1 to Manhole '0' weighted	$369.65	Line 6 X Line 7
9	Pulling Fiber from POI to Manhole '0'	$1.36	See Direct Expense/Investment 9
10	Distance between POI and Manhole '0'	50	See Assumption 1
11	Total Expense from POI and Manhole '0'	$68.00	Line 9 X Line 10
12	% Weighting	10%	See Assumption 9
13	Total Expense from POI and Manhole '0'	$6.80	Line 11 X Line 12
14	Total Pull Fiber Expense	$523.33	Line 3 + Line 8 + Line 13
	Cable		
1	Cable Expense	$1.23	See Direct Expense/Investment 11
2	Cable Placement Per Ft	$2.39	See Direct Expense/Investment 19
3	Number of Feet	150	See Assumption 13
4	Number of Fibers per Collocator	18	See Assumption 2
5	Cable Expense per Fiber	$30.13	Line 1 + Line 2 X Line 3 / Line 4
	Cable Rack		
1	Cable Rack Expense	$191.68	See Direct Expense/Investment 12
2	Number of Feet	20	See Assumption 11
3	Number of Collocators per Cable Rack	3	See Assumption 3
4	Number of Fibers per Collocator	18	See Assumption 2
5	Cable Rack Expense per Fiber	$70.99	Line 1 X Line 2 / Line 3 / Line 4
	Fiber Distribution Panel		
1	Fiber Distribution Panel Expense	$1,473.38	See Direct Expense/Investment 15
2	Number of Fibers Per Collocator	18	See Assumption 2
3	Fiber Distribution Panel Expense per Fiber	$81.85	Line 1/Line 2
	Single Fiber Jumper		
1	Single Fiber Jumper per Fiber	$132.05	See Direct Expense/Investment 16
	Attenuator		
1	Attenuator Expense per Fiber	$0.00	See Direct Expense/Investment 17

Version 1.0 Created 6/3/02, 9:53:02 AM

South Dakota

STANDARD SHARED ENTRANCE ENCLOSURE

	Core Drill		
1	Core Drill Expense per Drill	$112.00	See Direct Expense/Investment 18
2	Core Drills required per POI	2	See Assumption 4
3	Total Core Drill Expense for POI	$224.00	Line 1 X Line 2
4	% Weighting	10%	See Assumption 9
5	Total Expense For POI	$22.40	Line 3 X Line 4
6	Number of Core Drill Expense per Manhole 1	1	
7	Total Core Drill Expense for Manhole 1	$112.00	Line 1 X Line 6
8	% Weighting	90%	See Assumption 10
9	Total Expense for Manhole 1	$100.80	Line 7 X Line 8
10	Number of Core Drill Expense per Manhole 0	1	
11	Total Core Drill Expense for Manhole 0	$112.00	Line 1 X Line 10
12	Total Core Drill Expense	$235.20	Line 5 + Line 9 + Line 11
13	Number of Collocators per Central Office	3	See Assumption 3
14	Number of Fibers Per Collocator	18	See Assumption 2
15	Core Drill Expense per Fiber	$4.36	Line 12/Line 13/Line 14
	Fiber Cable Splicing		
1	Fiber Cable Splicing - per Setup	$387.69	See Direct Expense/Investment 13
2	Number of Splices per Collocator	18	See Assumption 2
3	Total Fiber Cable Splicing Setup per Collocator	$21.54	Line 1/Line 2
4	Fiber Cable Splicing - per Fiber Spliced	$16.32	See Direct Expense/Investment 14
5	Total Fiber Cable Splicing	$37.86	Line 4 + Line 5
6	Number of Splices per Fiber	2	See Assumption 5
7	Total Fiber Cable Splicing per Fiber	$75.72	Line 7 X Line 8
Investment			
	Manhole '0'		
1	Utility Hole Expense	$6,853.44	See Direct Expense/Investment 2
2	Cut and Replace Road Covering	$2,089.14	See Direct Expense/Investment 3
3	Backfill Utility Hole	$816.60	See Direct Expense/Investment 5
4	Total Utility Hole Expense	$9,759.17	Line 1 + Line 2 + Line 3
5	Capacity	50	
6	Total Utility Hole Investment per Capacity	$195.18	Line 4/Line 5
7	Number of Collocators per Utility Hole	3	See Assumption 3
8	Number of Fibers per Collocator	18	See Assumption 2
9	Utility Hole Expense Per Fiber	$3.61	Line 6/Line 7/Line 8
	Manhole 1		
1	Utility Hole Expense	$6,853.44	See Direct Expense/Investment 2
2	Cut and Replace Road Covering	$2,089.14	See Direct Expense/Investment 3
3	Backfill Utility Hole	$816.60	See Direct Expense/Investment 5
4	Total Utility Hole Expense	$9,759.17	Line 1 + Line 2 + Line 3
5	Capacity	20	
6	Total Utility Hole Investment per Capacity	$487.96	Line 4/Line 5
7	Number of Collocators per Utility Hole	3	See Assumption 3
8	Number of Fibers per Collocator	18	See Assumption 2
9	Utility Hole Expense Per Fiber	$9.04	Line 6/Line 7/Line 8

Version 1.0 Created 6/3/02, 9:53:02 AM

South Dakota

STANDARD SHARED ENTRANCE ENCLOSURE

10	% Weighting	90%	See Assumption 10
11	Total Utility Hole Expense per Fiber	$8.13	Line 9 X Line 10
	Conduit (Manhole '0' and Cable Vault)		
1	Conduit Investment per Foot	$22.85	See Direct Expense/Investment 7
2	Cut and Replace Concrete per Trench Foot	$13.06	See Direct Expense/Investment 4
3	Backfill Conduit Trench per Trench Foot	$5.21	See Direct Expense/Investment 6
4	Total Conduit Investments per Foot	$41.12	Line 1 + Line 2 + Line 3
5	Distance between Manhole '0' and Cable Vault	108	See Assumptions 7
6	Total Conduit Investment	$4,440.64	Line 4 X Line 5
7	Number of Collocators per Conduit	3	See Assumption 3
8	Number of Fibers per Collocator	18	See Assumption 2
9	Conduit Investment per Fiber	$82.23	Line 6/Line 7/Line 8
	Conduit (Manhole 1 and Manhole '0')		
1	Conduit Investment per Foot	$22.85	See Direct Expense/Investment 7
2	Cut and Replace Concrete per Trench Foot	$13.06	See Direct Expense/Investment 4
3	Backfill Conduit Trench per Trench Foot	$5.21	See Direct Expense/Investment 6
4	Total Conduit Investments per Foot	$41.12	Line 1 + Line 2 + Line 3
5	Distance between Manhole 1 and Manhole '0'	302	See Assumptions 8
6	Total Conduit Investment	$12,417.34	Line 4 X Line 5
7	Number of Collocators per Conduit	3	See Assumption 3
8	Number of Fibers per Collocator	18	See Assumption 2
9	Conduit Investment per Fiber	$229.95	Line 6/Line 7/Line 8
10	% Weighting	90%	See Assumption 10
11	Total Conduit Investment Per Fiber	$206.96	Line 9 X Line 10
	Innerduct (Manhole '0' to Cable Vault)		
1	Innerduct Investment per Foot	$2.81	See Direct Expense/Investment 10
2	Distance between Manhole '0' to Cable Vault	108	See Assumption 7
3	Total Innerduct Investment	$303.48	Line 1 X Line 2
4	Number of Fibers per Collocator	18	See Assumption 2
5	Innerduct Investment per Fiber	$16.86	Line 3/Line 4
	Innerduct (Manhole 1 to Manhole '0')		
1	Innerduct Investment per Foot	$2.81	See Direct Expense/Investment 10
2	Distance between Manhole '0' to Cable Vault	302	See Assumption 8
3	Total Innerduct Investment	$848.63	Line 1 X Line 2
4	Number of Fibers per Collocator	18	See Assumption 2
5	Innerduct Investment per Fiber	$47.15	Line 3/Line 4
6	% Weighting	90%	See Assumption 10
7	Total Innerduct Investment per Fiber	$42.43	Line 5 X Line 6
	Core Drill		
1	Core Drill Investment per Drill	$112.00	See Direct Expense/Investment 18
2	Number of Core Drill Investment per Manhole 1	1	
3	Total Core Drill Investment for Manhole 1	$112.00	Line 1 X Line 6
4	% Weighting	90%	See Assumption 10
5	Total Investment for Manhole 1	$100.80	Line 7 X Line 8
6	Number of Core Drill Investment per Manhole 0	1	

Version 1.0 Created 6/3/02, 9:53:02 AM

South Dakota

STANDARD SHARED ENTRANCE ENCLOSURE

7	Total Core Drill Investment for Manhole 0	$112.00	Line 1 X Line 10
8	Total Core Drill Investment	$212.80	Line 5 + Line 9 + Line 11
9	Number of Collocators per Central Office	3	See Assumption 3
10	Number of Fibers Per Collocator	18	See Assumption 2
11	Core Drill Investment per Fiber	$3.94	Line 12/Line 13/Line 14
	Cable Rack		
1	Cable Rack Expense	$191.68	See Direct Expense/Investment 12
2	Number of Feet	130	See Assumption 12
3	Number of Fiber Cables per Cable Rack	80	
4	Number of Fibers per Collocator	18	See Assumption 2
5	Cable Rack Expense per Fiber	$17.30	Line 1 X Line 2 / Line 3 / Line 4
Total Expense by FRC			
	4C		
1	Utility Hole Expense Per Fiber	$18.07	See Utility Hole 9
2	Conduit Expense Per Fiber	$3.81	See Conduit 11
3	Innerduct Expense Per Fiber	$3.94	See Innerduct 11
4	Core Drill Expense Per Fiber	$4.36	See Core Drill 15
5	Pull Fiber Expense Per Fiber	$29.07	See Pull Fiber 14
	Total Expense for FRC 4C	**$59.24**	Line 1 + Line 2 + Line 3 + Line 4
	85C		
1	Cable Expense per Fiber (POI to Manhole '0')	$0.31	See Cable (POI to Manhole '0') 6
4	Cable Expense per Fiber (Manhole '0' to Manhole Cable Vault)	$6.59	See Cable (Manhole 0 to Cable Vault) 4
7	Cable Expense per Fiber (Manhole 1 to Manhole '0')	$16.59	See Cable (Manhole 1 to Manhole '0') 6
8	Fiber Cable Splicing Per Fiber	$75.72	See Fiber Cable Splicing 7
	Total Expense for FRC 85C	**$99.20**	Line 3 + Line 6 + Line 7 + Line 8
	257C		
1	Cable Expense per Fiber	$30.13	See Cable 4
2	Cable Rack Expense per Fiber	$70.99	See Cable Rack 5
	Total Expense for FRC 257C	**$101.12**	Line 1 + Line 2
	357C		
1	Fiber Distribution Panel Expense per Fiber	$81.85	See Fiber Distribution Panel 3
2	Single Fiber Jumper per Fiber	$132.05	See Single Fiber Jumper 1
3	Attenuator per Fiber	$0.00	See Attenuator 1
	Total Expense for FRC 357C	**$213.90**	Line 1 + Line 2 + Line 3
Total Investment by FRC			
	4C		
1	Manhole '0' Investment Per Fiber	$3.61	See Manhole '0' 9 p.132

Version 1.0 Created 6/3/02, 9:53:02 AM			
South Dakota			
	STANDARD SHARED ENTRANCE ENCLOSURE		
2	Conduit (Manhole '0' to Cable Vault)Investment per Fiber	$82.23	See Conduit (Manhole '0' to Cable Vault) 9 p.132
3	Innerduct (Manhole '0' to Cable Vault) Investment per Fiber	$16.86	See Innerduct (Manhole '0' to Cable Vault) 5 p.133
4	Manhole 1 Investment Per Fiber	$8.13	See Manhole 1 11 p.132
5	Conduit (Manhole 1 to Manhole '0')Investment per Fiber	$206.96	See Conduit (Manhole 1 to Manhole '0') 7 p.133
6	Innerduct (Manhole 1 to Manhole '0') Investment per Fiber	$42.43	See Innerduct (Manhole 1 to Manhole '0') 7 p.133
7	Core Drill Investment per Fiber	$3.94	See Core Drill 11 p.134
	Total Investment for FRC 4C	**$364.17**	Line 1 + Line 2 + Line 3 + Line 4 + Line 5 + Line 6 + Line 7
	257C		
1	Cable Racking (Shared)	$17.30	See Cable Rack 5
	Total Investment for FRC 257C	**$17.30**	Line 1

Cell: A27
omment: Defaults were provided by product management team

Version 1.0 Created 6/3/02, 9:53:02 AM

South Dakota

CROSS CONNECT ENTRANCE FACILITY

DIRECT EXPENSES

	Collocation Entrance Facility	1998 Expense	Expense X Sales Tax	FRC Code
1	Fiber Cable Per Ft. Expense	$1.04	$1.10	85C
2	Utility Hole Expense	$6,487.54	$6,853.44	4C
3	Cut & Replace Road Covering - Utility Hole	$1,977.60	$2,089.14	4C
4	Cut & Replace Concrete Per Trench Ft. - Conduit	$12.36	$13.06	4C
5	Backfill Utility Hole	$816.60	$816.60	4C
6	Backfill Conduit Trench Per Trench Ft.	$5.21	$5.21	4C
7	Conduit Expense Per Ft.	$21.63	$22.85	4C
8	Expense for Pumping Utility Hole	$499.96	$499.96	4C
9	Per Ft. Expense for Pulling Fiber in Conduit	$1.36	$1.36	4C
10	Innerduct Per Ft.	$2.66	$2.81	4C
11	Fiber Cable Per Ft.	$1.16	$1.23	257C
12	Fiber Cable Racking Per Ft	$181.45	$191.68	257C
13	Fiber Cable Splicing - Per Setup	$366.99	$387.69	85C
14	Fiber Cable Splicing - Per Fiber Spliced	$16.32	$16.32	85C
15	Fiber Distribution Panel	$1,394.72	$1,473.38	357C
16	Single Fiber Jumper	$125.00	$132.05	357C
17	Attenuator Per Fiber	$0.00	$0.00	357C
18	Core Drill	$112.00	$112.00	4C
19	Placing Fiber Cable on Cable Racking Per Ft	$2.39	$2.39	257C

ASSUMPTIONS

1	Distance from POI to USW Manhole '0' (feet)	50
2	Fibers required per Collocator	18
3	Collocators per Utility Hole/Conduit/CO	3
4	Core Drills per Manhole	2
5	Number of Fiber Splice Setup	2
6	Number of fibers spliced per CLEC	18
7	Number of Fiber Distribution Panel	2
8	Distance from Manhole '0' to Cable Vault	108
9	Distance between Manhole 1 and Manhole '0'	302
10	Weighting Use of POI	10%
11	Weighting of use of Existing Manhole = (1-%POI)	90%
12	Distance of New Cable Racking	20
13	Distance of Shared Cable Racking	130
14	Distance from Cable Vault to CLEC Space	150

Version 1.0 Created 6/3/02, 9:53:02 AM

South Dakota

CROSS CONNECT ENTRANCE FACILITY

CALCULATIONS

	Utility Hole - POI		
1	Utility Hole Expense	$6,853.44	See Direct Expense 2
2	Cut and Replace Road Covering	$2,089.14	See Direct Expense 3
3	Backfill Utility Hole	$816.60	See Direct Expense 5
4	Total Utility Hole Expense	$9,759.17	Line 1 + Line 2 + Line 3
5	Number of Collocators per Utility Hole	3	See Assumption 3
6	Number of Fibers per Collocator	18	See Assumption 2
7	Utility Hole Expense Per Fiber	$180.73	Line 4/Line 5/Line 6
8	% Weighting	10%	See Assumption 10
9	Total Utility Hole Expense	$18.07	Line 7 X Line 8
	Conduit - POI		
1	Conduit Expense per Foot	$22.85	See Direct Expense 7
2	Cut and Replace Concrete per Trench Foot	$13.06	See Direct Expense 4
3	Backfill Conduit Trench per Trench Foot	$5.21	See Direct Expense 6
4	Total Conduit Expenses per Foot	$41.12	Line 1 + Line 2 + Line 3
5	Distance between POI and USW Manhole '0'	50	See Assumptions 1
6	Total Conduit Expense	$2,055.85	Line 4 X Line 5
7	Number of Collocators per Conduit	3	See Assumption 3
8	Number of Fibers per Collocator	18	See Assumption 2
9	Conduit Expense per Fiber	$38.07	Line 6/Line 7/Line 8
10	% Weighting	10%	See Assumption 10
11	Total Utility Hole Expense	$3.81	Line 9 X Line 10
	Innerduct - POI		
1	Innerduct Expense per Foot	$2.81	See Direct Expense 10
2	Pull Fiber from Utility Hole to Cable Vault Per Foot	$1.36	See Direct Expense 9
3	Total Innerduct Expense Per Foot	$4.17	Line 1 + Line 2
4	Distance between POI and USW Manhole '0'	50	See Assumption 1
5	Total Innerduct Expense	$208.50	Line 3 X Line 4
6	Pump Utility Hole Expense	$499.96	See Direct Expense 8
7	Total Expenses	$708.46	Line 5 + Line 6
8	Number of Fibers per Collocator	18	See Assumption 2
9	Cable and Innerduct Expense per Fiber	$39.36	Line 7/Line 8
10	% Weighting	10%	See Assumption 10
11	Total Utility Hole Expense	$3.94	Line 10 X Line 11
	Outside Cable (POI to Manhole '0')		
1	Fiber Cable Expense per Foot	$1.10	See Direct Expense 1
2	Distance between POI and USW Manhole '0'	50	See Assumption 1
3	Number of Fibers per Collocator	18	See Assumption 2
4	Cable Expense per Fiber	$3.05	(Line 1 X Line 2)/Line 3
5	% Weighting	10%	See Assumption 10
6	Total Utility Hole Expense	$0.31	Line 4 X Line 5

Version 1.0 Created 6/3/02, 9:53:02 AM

South Dakota

CROSS CONNECT ENTRANCE FACILITY

	Outside Cable (Manhole '0' to Cable Vault)		
1	Fiber Cable Expense per Foot	$1.10	See Direct Expense 1
2	Distance between POI and USW Manhole '0'	108	See Assumption 7
3	Number of Fibers per Collocator	18	See Assumption 2
4	Cable Expense per Fiber	$6.59	(Line 1 X Line 2)/Line 3
	Outside Cable (Manhole 1 to Manhole '0')		
1	Fiber Cable Expense per Foot	$1.10	See Direct Expense 1
2	Distance between POI and USW Manhole '0'	302	See Assumption 1
3	Number of Fibers per Collocator	18	See Assumption 2
4	Cable Expense per Fiber	$18.43	(Line 1 X Line 2)/Line 3
5	% Weighting	90%	See Assumption 11
6	Total Utility Hole Expense	$16.59	Line 4 X Line 5
	Pulling Fiber		
1	Pulling Fiber from Manhole '0' to Cable Vault	$1.36	See Direct Expense/Investment 9
2	Distance between Manhole '0' and Cable Vault	108	See Assumption 7
3	Total Expense from Manhole '0' to Cable Vault	$146.88	Line 1 X Line 2
4	Pulling Fiber from Manhole 1 to Manhole '0'	$1.36	See Direct Expense/Investment 9
5	Distance between Manhole 1 to Manhole '0'	302	See Assumption 8
6	Total Expense from Manhole 1 to Manhole '0'	$410.72	Line 4 X Line 5
7	% Weighting	90%	See Assumption 11
8	Total Expense from Manhole 1 to Manhole '0' weighted	$369.65	Line 6 X Line 7
9	Pulling Fiber from POI to Manhole '0'	$1.36	See Direct Expense/Investment 9
10	Distance between POI and Manhole '0'	50	See Assumption 1
11	Total Expense from POI and Manhole '0'	$68.00	Line 9 X Line 10
12	% Weighting	10%	See Assumption 10
13	Total Expense from POI and Manhole '0'	$6.80	Line 11 X Line 12
14	Total Pull Fiber Expense	$523.33	Line 3 + Line 8 + Line 13
	Cable		
1	Cable Expense	$1.23	See Direct Expense 11
2	Cable Placement Per Ft	$2.39	See Direct Expense/Investment 19
3	Number of Feet	150	See Assumption 14
4	Number of Fibers per Collocator	18	See Assumption 2
5	Cable Expense per Fiber	$30.13	Line 1/Line 2
	Cable Rack		
1	Cable Rack Expense	$191.68	See Direct Expense 12
2	Number of Feet	20	See Assumption 13
3	Number of Collocators per Cable Rack	3	See Assumption 3
4	Number of Fibers per Collocator	18	See Assumption 2
5	Cable Rack Expense per Fiber	$70.99	Line 1/Line 2/Line 3

Version 1.0 Created 6/3/02, 9:53:02 AM
South Dakota

CROSS CONNECT ENTRANCE FACILITY

	Fiber Distribution Panel		
1	Fiber Distribution Panel Expense	$1,473.38	See Direct Expense 15
2	Number of Fiber Distribution Panels	2	See Assumption 7
3	Total Fiber Distribution Panel Expense	$2,946.76	Line 1 X Line 2
4	Number of Fibers Per Collocator	18	See Assumption 2
5	Fiber Distribution Panel Expense per Fiber	$163.71	Line 3/Line 4
	Single Fiber Jumper		
1	Single Fiber Jumper per Fiber	$132.05	See Direct Expense 16
	Attenuator		
1	Attenuator Expense per Fiber	$0.00	See Direct Expense 17
	Core Drill		
1	Core Drill Expense per Drill	$112.00	See Direct Expense/Investment 18
2	Core Drills required per POI	2	See Assumption 4
3	Total Core Drill Expense for POI	$224.00	Line 1 X Line 2
4	% Weighting	10%	See Assumption 10
5	Total Expense For POI	$22.40	Line 3 X Line 4
6	Number of Core Drill Expense per Manhole 1	1	
7	Total Core Drill Expense for Manhole 1	$112.00	Line 1 X Line 6
8	% Weighting	90%	See Assumption 11
9	Total Expense for Manhole 1	$100.80	Line 7 X Line 8
10	Number of Core Drill Expense per Manhole 0	1	
11	Total Core Drill Expense for Manhole 0	$112.00	Line 1 X Line 10
12	Total Core Drill Expense	$235.20	Line 5 + Line 9 + Line 11
13	Number of Collocators per Central Office	3	See Assumption 3
14	Number of Fibers Per Collocator	18	See Assumption 2
15	Core Drill Expense per Fiber	$4.36	Line 12/Line 13/Line 14
	Fiber Cable Splicing		
1	Fiber Cable Splicing - per Setup	$387.69	See Direct Expense 13
2	Number of Splices per Fiber	18	See Assumption 5
3	Total Fiber Cable Splicing Setup per Collocator	$21.54	Line 1/Line 2
4	Fiber Cable Splicing - per Fiber Spliced	$16.32	See Direct Expense 14
5	Total Fiber Cable Splicing	$37.86	Line 4 + Line 5
6	Number of Splices per Fiber	2	See Assumption 5
7	Total Fiber Cable Splicing per Fiber	$75.72	Line 7 X Line 8

Version 1.0 Created 6/3/02, 9:53:02 AM
South Dakota

CROSS CONNECT ENTRANCE FACILITY

Investment			
	Manhole '0'		
1	Utility Hole Expense	$6,853.44	See Direct Expense/Investment 2
2	Cut and Replace Road Covering	$2,089.14	See Direct Expense/Investment 3
3	Backfill Utility Hole	$816.60	See Direct Expense/Investment 5
4	Total Utility Hole Expense	$9,759.17	Line 1 + Line 2 + Line 3
5	Capacity	50	
6	Total Utility Hole Investment per Capacity	$195.18	Line 4/Line 5
7	Number of Collocators per Utility Hole	3	See Assumption 3
8	Number of Fibers per Collocator	18	See Assumption 2
9	Utility Hole Expense Per Fiber	$3.61	Line 6/Line 7/Line 8
	Manhole 1		
1	Utility Hole Expense	$6,853.44	See Direct Expense/Investment 2
2	Cut and Replace Road Covering	$2,089.14	See Direct Expense/Investment 3
3	Backfill Utility Hole	$816.60	See Direct Expense/Investment 5
4	Total Utility Hole Expense	$9,759.17	Line 1 + Line 2 + Line 3
5	Capacity	20	
6	Total Utility Hole Investment per Capacity	$487.96	Line 4/Line 5
7	Number of Collocators per Utility Hole	3	See Assumption 3
8	Number of Fibers per Collocator	18	See Assumption 2
9	Utility Hole Expense Per Fiber	$9.04	Line 6/Line 7/Line 8
10	% Weighting	90%	See Assumption 11
11	Total Utility Hole Expense per Fiber	$8.13	Line 9 X Line 10
	Conduit (Manhole '0' and Cable Vault)		
1	Conduit Investment per Foot	$22.85	See Direct Expense/Investment 7
2	Cut and Replace Concrete per Trench Foot	$13.06	See Direct Expense/Investment 4
3	Backfill Conduit Trench per Trench Foot	$5.21	See Direct Expense/Investment 6
4	Total Conduit Investments per Foot	$41.12	Line 1 + Line 2 + Line 3
5	Distance between Manhole '0' and Cable Vault	108	See Assumptions 7
6	Total Conduit Investment	$4,440.64	Line 4 X Line 5
7	Number of Collocators per Conduit	3	See Assumption 3
8	Number of Fibers per Collocator	18	See Assumption 2
9	Conduit Investment per Fiber	$82.23	Line 6/Line 7/Line 8

Version 1.0 Created 6/3/02, 9:53:02 AM

South Dakota

CROSS CONNECT ENTRANCE FACILITY

	Conduit (Manhole 1 and Manhole '0')		
1	Conduit Investment per Foot	$22.85	See Direct Expense/Investment 7
2	Cut and Replace Concrete per Trench Foot	$13.06	See Direct Expense/Investment 4
3	Backfill Conduit Trench per Trench Foot	$5.21	See Direct Expense/Investment 6
4	Total Conduit Investments per Foot	$41.12	Line 1 + Line 2 + Line 3
5	Distance between Manhole 1 and Manhole '0'	302	See Assumptions 9
6	Total Conduit Investment	$12,417.34	Line 4 X Line 5
7	Number of Collocators per Conduit	3	See Assumption 3
8	Number of Fibers per Collocator	18	See Assumption 2
9	Conduit Investment per Fiber	$229.95	Line 6/Line 7/Line 8
10	% Weighting	90%	See Assumption 11
11	Total Conduit Investment Per Fiber	$206.96	Line 9 X Line 10
	Innerduct (Manhole '0' to Cable Vault)		
1	Innerduct Investment per Foot	$2.81	See Direct Expense/Investment 10
2	Distance between Manhole '0' to Cable Vault	108	See Assumption 8
3	Total Innerduct Investment	$303.48	Line 1 X Line 2
4	Number of Fibers per Collocator	18	See Assumption 2
5	Innerduct Investment per Fiber	$16.86	Line 3/Line 4
	Innerduct (Manhole 1 to Manhole '0')		
1	Innerduct Investment per Foot	$2.81	See Direct Expense/Investment 10
2	Distance between Manhole '0' to Cable Vault	302	See Assumption 8
3	Total Innerduct Investment	$848.63	Line 1 X Line 2
4	Number of Fibers per Collocator	18	See Assumption 2
5	Innerduct Investment per Fiber	$47.15	Line 3/Line 4
6	% Weighting	90%	See Assumption 10
7	Total Innerduct Investment per Fiber	$42.43	Line 5 X Line 6
	Core Drill		
1	Core Drill Investment per Drill	$112.00	See Direct Expense/Investment 18
2	Number of Core Drill Investment per Manhole 1	1	
3	Total Core Drill Investment for Manhole 1	$112.00	Line 1 X Line 2
4	% Weighting	90%	See Assumption 10
5	Total Investment for Manhole 1	$100.80	Line 3 X Line 4
6	Number of Core Drill Investment per Manhole 0	1	
7	Total Core Drill Investment for Manhole 0	$112.00	Line 1 X Line 6
8	Total Core Drill Investment	$212.80	Line 5 + Line 9
9	Number of Collocators per Central Office	3	See Assumption 3
10	Number of Fibers Per Collocator	18	See Assumption 2
11	Core Drill Investment per Fiber	$3.94	Line 8/Line 9/Line 10

Version 1.0 Created 6/3/02, 9:53:02 AM

South Dakota

CROSS CONNECT ENTRANCE FACILITY

	Cable Rack		
1	Cable Rack Expense	$191.68	See Direct Expense/Investment 12
2	Number of Feet	130	See Assumption 12
3	Number of Fiber Cables per Cable Rack	80	
4	Number of Fibers per Collocator	18	See Assumption 2
5	Cable Rack Expense per Fiber	$17.30	Line 1 X Line 2 / Line 3 / Line 4
Total Expense by FRC			
	4C		
1	Utility Hole Expense Per Fiber	$18.07	See Utility Hole 9
2	Conduit Expense Per Fiber	$3.81	See Conduit 11
3	Innerduct Expense Per Fiber	$3.94	See Innerduct 11
4	Core Drill Expense Per Fiber	$4.36	See Core Drill 15
5	Pull Fiber Expense Per Fiber	$29.07	See Pull Fiber 14
	Total Expense for FRC 4C	**$59.24**	Line 1+Line 2+Line 3+Line 4+Line 5
	85C		
1	Cable Expense per Fiber (POI to Manhole '0')	$0.31	See Cable (POI to Manhole '0') 6
2	Cable Expense per Fiber (Manhole '0' to Manhole Cable Vault)	$6.59	See Cable (Manhole 0 to Cable Vault) 4
3	Cable Expense per Fiber (Manhole 1 to Manhole '0')	$16.59	See Cable (Manhole 1 to Manhole '0') 6
4	Fiber Cable Splicing Per Fiber	$75.72	See Fiber Cable Splicing 7
	Total Expense for FRC 85C	**$99.20**	Line 1+Line 2+Line 3+Line 4
	257C		
1	Cable Expense per Fiber	$30.13	See Cable 4
2	Cable Rack Expense per Fiber	$70.99	See Cable Rack 5
	Total Expense for FRC 257C	**$101.12**	Line 1 + Line 2
	357C		
1	Fiber Distribution Panel Expense per Fiber	$163.71	See Fiber Distribution Panel 3
2	Single Fiber Jumper per Fiber	$132.05	See Single Fiber Jumper 1
3	Attenuator per Fiber	$0.00	See Attenuator 1
	Total Expense for FRC 357C	**$295.76**	Line 1 + Line 2 + Line 3

Version 1.0 Created 6/3/02, 9:53:02 AM

South Dakota

CROSS CONNECT ENTRANCE FACILITY

Total Investment by FRC			
	4C		
1	Manhole '0' Investment Per Fiber	$3.61	See Manhole '0' 9
2	Conduit (Manhole '0' to Cable Vault)Investment per Fiber	$82.23	See Conduit (Manhole '0' to Cable Vault) 9
3	Innerduct (Manhole '0' to Cable Vault) Investment per Fiber	$16.86	See Innerduct (Manhole '0' to Cable Vault) 5
4	Manhole 1 Investment Per Fiber	$8.13	See Manhole 1 11
5	Conduit (Manhole 1 to Manhole '0')Investment per Fiber	$206.96	See Conduit (Manhole 1 to Manhole '0') 7
6	Innerduct (Manhole 1 to Manhole '0') Investment per Fiber	$42.43	See Innerduct (Manhole 1 to Manhole '0') 7
7	Core Drill Investment per Fiber	$3.94	See Core Drill 11 p.134
	Total Investment for FRC 4C	**$364.17**	Line 1 + Line 2 + Line 3 + Line 4 + Line 5 + Line 6 + Line 7
	257C		
1	Cable Racking (Shared)	$17.30	See Cable Rack 5
	Total Investment for FRC 257C	**$17.30**	Line 1

Cell: A27
Comment: Defaults were provided by product management team

Version 1.0 Created 6/3/02, 9:53:02 AM

South Dakota

DEDICATED EXPRESS FIBER (CLEC PROVIDES FIRE RATED CABLE)

DIRECT EXPENSES

	Collocation Entrance Facility	1998 Expense	Expense X Sales Tax	FRC Code
1	Utility Hole Expense	$6,487.54	$6,853.44	4C
2	Cut & Replace Road Covering - Utility Hole	$1,977.60	$2,089.14	4C
3	Cut & Replace Concrete Per Trench Ft. - Conduit	$12.36	$13.06	4C
4	Backfill Utility Hole	$816.60	$816.60	4C
5	Backfill Conduit Trench Per Trench Ft.	$5.21	$5.21	4C
6	Conduit Expense Per Ft.	$21.63	$22.85	4C
7	Expense for Pumping Utility Hole	$499.96	$499.96	4C
8	Per Ft. Expense for Pulling Fiber in Conduit	$1.36	$1.36	4C
9	Innerduct Per Ft.	$2.66	$2.81	4C
10	Core Drill	$112.00	$112.00	4C
11	Cable Rack Per Ft	$181.45	$191.68	257C
12	Placing Fiber on Cable Racking Per Ft.	$2.39	$2.39	257C

ASSUMPTIONS

1	Distance from POI to Manhole '0' (feet)	50
2	Core Drills per central office	2
3	Collocators per Utility Hole/Conduit/CO	3
4	Distance from POI to Cable Vault (feet)	150
5	Distance for New Cable Racking	20
6	Distance for Existing Cable Racking	130
7	Distance from Manhole '0' to Cable Vault	108
8	Distance between Manhole 1 and Manhole '0'	302
9	Weighting Use of POI	10%
10	Weighting of use of Existing Manhole = (1-%POI)	90%
11	Distance of New Cable Racking	20
12	Distance of Shared Cable Racking	130
13	Distance from Cable Vault to CLEC Space	150

CALCULATIONS

	Utility Hole		
1	Utility Hole Expense	$6,853.44	See Direct Expense 1
2	Cut and Replace Road Covering	$2,089.14	See Direct Expense 2
3	Backfill Utility Hole	$816.60	See Direct Expense 4
4	Total Utility Hole Expense	$9,759.17	Line 1 + Line 2 + Line 3
5	Number of Collocators per Utility Hole	3	See Assumption 3
6	Utility Hole Expense Per Collocator	$3,253.06	Line 4/Line 5
7	% Weighting	10%	See Assumption 9
8	Total Utility Hole Expense	$325.31	Line 6 * Line 7

Version 1.0 Created 6/3/02, 9:53:02 AM

South Dakota

	DEDICATED EXPRESS FIBER (CLEC PROVIDES FIRE RATED CABLE)		
	Conduit - POI		
1	Conduit Expense per Foot	$22.85	See Direct Expense 6
2	Cut and Replace Concrete per Trench Foot	$13.06	See Direct Expense 3
3	Backfill Conduit Trench per Trench Foot	$5.21	See Direct Expense 5
4	Total Conduit Expenses per Foot	$41.12	Line 1 + Line 2 + Line 3
5	Distance between POI and USW Cable Vault	50	See Assumption 1
6	Total Conduit Expense	$2,055.85	Line 4 X Line 5
7	Number of Collocators per Conduit	3	See Assumption 3
8	Conduit Expense per Collocator	$685.28	Line 6/Line 7
9	% Weighting	10%	See Assumption 9
10	Total Conduit Expense	$68.53	Line 8 * Line 9
	Innerduct		
1	Innerduct Expense per Foot	$2.81	See Direct Expense 9
2	Pull Fiber from Utility Hole to Cable Vault Per Foot	$1.36	See Direct Expense 8
3	Total Innerduct Expense Per Foot	$4.17	Line 1 + Line 2
4	Distance between POI and USW Cable Vault	150	See Assumption 4
5	Total Innerduct Expense	$625.50	Line 3 x Line 4
6	Pump Utility Hole Expense	$499.96	See Direct Expense 7
7	Innerduct Expense per Collocator	$1,125.46	Line 5 + Line 6
8	% Weighting	10%	See Assumption 9
9	Total Innerduct Expense	$112.55	Line 7 * Line 8
	Pulling Fiber		
1	Pulling Fiber from Manhole '0' to Cable Vault	$1.36	See Direct Expense/Investment 9
2	Distance between Manhole '0' and Cable Vault	$108.00	See Assumption 7
3	Total Expense from Manhole '0' to Cable Vault	$146.88	Line 1 X Line 2
4	Pulling Fiber from Manhole 1 to Manhole '0'	$1.36	See Direct Expense/Investment 9
5	Distance between Manhole 1 to Manhole '0'	$302.00	See Assumption 8
6	Total Expense from Manhole 1 to Manhole '0'	$410.72	Line 4 X Line 5
7	Total Expense for Pulling Fiber	$557.60	Line 6 + Line 3
8	% Weighting	90%	See Assumption 10
9	Total Pull Fiber Expense	$501.84	Line 7 * Line 8
	Cable Rack		
1	Cable Rack Expense	$191.68	See Direct Expense 11
2	Number of Feet	20	See Assumption 5
3	Number of Collocators per Cable Rack	3	See Assumption 3
4	Cable Rack Expense per Collocator	$1,277.89	Line 1 X Line 2 / Line 3
	Core Drill		
1	Core Drill Expense per Drill	$112.00	See Direct Expense 14
2	Core Drills required per Central Office	2	See Assumption 2
3	Total Core Drill Expense	$224.00	Line 1 X Line 2
4	% Weighting	10%	See Assumption 9
5	Total Core Drill Expense for POI	$22.40	Line 3 * Line 4
6	Number of Core Drills in MH0	1	
7	Core Drill Expense per Drill	$112.00	See Direct Expense 14
8	% Weighting	90%	See Assumption 10
9	Total Core Drill Expense for MH0	$100.80	Line 7 * Line 8
10	Number of Core Drills in MH1	1	
11	Core Drill Expense per Drill	$112.00	See Direct Expense 14
12	% Weighting	90%	See Assumption 10
13	Total Core Drill Expense for MH1	$100.80	Line10 * Line 11 * Line 12
14	Total Core Drill Expense	$224.00	Line 5 + Line 9 + Line 13

Version 1.0 Created 6/3/02, 9:53:02 AM
South Dakota

DEDICATED EXPRESS FIBER (CLEC PROVIDES FIRE RATED CABLE)

15	Number of Collocators per Central Office	3	See Assumption 3
16	Core Drill Expense per Collocator	$74.67	Line 14 / Line 15

Investment

Cable Rack

1	Cable Rack Investment	$191.68	See Direct Expense 11
2	Number of Feet	130	See Assumption 5
3	Number of Fiber Cables per Cable Rack	80	
4	Cable Rack per Collocator	$311.49	Line 1 X Line 2 / Line 3

Manhole '0'

1	Utility Hole Expense	$6,853.44	See Direct Expense/Investment 2
2	Cut and Replace Road Covering	$2,089.14	See Direct Expense/Investment 3
3	Backfill Utility Hole	$816.60	See Direct Expense/Investment 5
4	Total Utility Hole Expense	$9,759.17	Line 1 + Line 2 + Line 3
5	Capacity	50	
6	Total Utility Hole Investment per Capacity	$195.18	Line 4/Line 5
7	Number of Collocators per Utility Hole	3	See Assumption 3
8	Utility Hole Expense Per Collocator	$65.06	Line 6/Line 7
9	% Weighting	90%	See Assumption 10
10	Total Utility Hole Expense	$58.56	Line 9 X Line 8

Manhole 1

1	Utility Hole Expense	$6,853.44	See Direct Expense/Investment 2
2	Cut and Replace Road Covering	$2,089.14	See Direct Expense/Investment 3
3	Backfill Utility Hole	$816.60	See Direct Expense/Investment 5
4	Total Utility Hole Expense	$9,759.17	Line 1 + Line 2 + Line 3
5	Capacity	20	
6	Total Utility Hole Investment per Capacity	$487.96	Line 4/Line 5
7	Number of Collocators per Utility Hole	3	See Assumption 3
9	Utility Hole Expense Per Fiber	$162.65	Line 6/Line 7/Line 8
10	% Weighting	90%	See Assumption 10
11	Total Utility Hole Expense per Fiber	$146.39	Line 9 X Line 10

Conduit (Manhole '0' and Cable Vault)

1	Conduit Investment per Foot	$22.85	See Direct Expense/Investment 7
2	Cut and Replace Concrete per Trench Foot	$13.06	See Direct Expense/Investment 4
3	Backfill Conduit Trench per Trench Foot	$5.21	See Direct Expense/Investment 6
4	Total Conduit Investments per Foot	$41.12	Line 1 + Line 2 + Line 3
5	Distance between Manhole '0' and Cable Vault	108	See Assumptions 7
6	Total Conduit Investment	$4,440.64	Line 4 X Line 5
7	Number of Collocators per Conduit	3	See Assumption 3
8	Conduit Investment per Fiber	$1,480.21	Line 6/Line 7
9	% Weighting	90%	See Assumption 10
10	Total Conduit Investment per Fiber	$1,332.19	Line 9 X Line 8

Conduit (Manhole 1 and Manhole '0')

1	Conduit Investment per Foot	$22.85	See Direct Expense/Investment 7
2	Cut and Replace Concrete per Trench Foot	$13.06	See Direct Expense/Investment 4
3	Backfill Conduit Trench per Trench Foot	$5.21	See Direct Expense/Investment 6
4	Total Conduit Investments per Foot	$41.12	Line 1 + Line 2 + Line 3
5	Distance between Manhole 1 and Manhole '0'	302	See Assumptions 8
6	Total Conduit Investment	$12,417.34	Line 4 X Line 5

Version 1.0 Created 6/3/02, 9:53:02 AM
South Dakota

	DEDICATED EXPRESS FIBER (CLEC PROVIDES FIRE RATED CABLE)		
7	Number of Collocators per Conduit	3	See Assumption 3
8	Number of Fibers per Collocator	$4,139.11	See Assumption 2
10	% Weighting	90%	See Assumption 10
11	Total Conduit Investment Per Fiber	$3,725.20	Line 9 X Line 10
	Innerduct (Manhole '0' to Cable Vault)		
1	Innerduct Investment per Foot	$2.81	See Direct Expense/Investment 10
2	Distance between Manhole '0' to Cable Vault	108	See Assumption 7
3	Total Innerduct Investment	$303.48	Line 1 X Line 2
4	% Weighting	90%	See Assumption 10
5	Innerduct Investment per Fiber	$273.13	Line 3 X Line 4
	Innerduct (Manhole 1 to Manhole '0')		
1	Innerduct Investment per Foot	$2.81	See Direct Expense/Investment 10
2	Distance between Manhole 1 to Manhole '0'	302	See Assumption 8
3	Total Innerduct Investment	$848.63	Line 1 X Line 2
4	% Weighting	90%	See Assumption 10
5	Total Innerduct Investment per Fiber	$763.76	Line 3 X Line 4
	Core Drill		
1	Core Drill Investment per Drill	$112.00	See Direct Expense/Investment 18
2	Number of Core Drill Investment per Manhole 1	1	
3	Total Core Drill Investment for Manhole 1	$112.00	Line 1 X Line 2
4	% Weighting	90%	See Assumption 10
5	Total Investment for Manhole 1	$100.80	Line 3 X Line 4
6	Number of Core Drill Investment per Manhole 0	1	
7	Total Core Drill Investment for Manhole 0	$112.00	Line 6 X Line 5
8	% Weighting	90%	See Assumption 10
9	Total Core Drill for MH0	$100.80	Line 7 X Line 8
10	Total Core Drill Investment	$201.60	Line 5 + Line 9
11	Number of Collocators per Central Office	3	See Assumption 3
12	Core Drill Investment per Fiber	$67.20	Line 10/Line 11

Version 1.0 Created 6/3/02, 9:53:02 AM

South Dakota

DEDICATED EXPRESS FIBER (CLEC PROVIDES FIRE RATED CABLE)

Total Expense by FRC

	4C		
1	Utility Hole Expense per Collocator	$3,253.06	See Utility Hole 6
2	Conduit Expense per Collocator	$685.28	See Conduit 8
3	Innerduct Expense per Collocator	$1,125.46	See Innerduct 7
4	Pulling Fiber	$501.84	See Pulling Fiber 9
5	Core Drill Expense per Collocator	$74.67	See Core Drill 16
	Total Expense for FRC 4C	**$5,640.31**	**Line 1 + Line 2 + Line 3 + Line 4 + Line 5**
	257C		
1	Cable Rack per Collocator	$1,277.89	See Cable Rack 4
	Total Expense for FRC 257C	**$1,277.89**	**Line 1**

Total Investment By FRC

	4C		
1	Utility Hole Investment per Collocator	$204.94	See Utility Hole MH0 + MH1
2	Conduit Expense per Collocator	$5,057.40	See Conduit MH0 + MH1
3	Innerduct Expense per Collocator	$1,036.90	See Innerduct MH0 + MH1
4	Core Drill Expense per Collocator	$67.20	See Core Drill
	Total Investment for FRC 4C	**$6,366.44**	**Line 1 + Line 2 + Line 3 + Line 4**
	257C		
1	Cable Rack per Collocator	$311.49	See Cable Rack 4
	Total Expense for FRC 257C	**$311.49**	**Line 1**

Cell: B15
Comment: 3 - 1 1/4"

	A	B	C
1	Version 1.0 Created 6/3/02, 9:53:02 AM		
2	South Dakota		
3	**Fiber Splicing**		
4		Input	Total including sales tax
5			
6	Per Site Setup	$344.00	$363.40
7			
8	Per Fiber Spliced	$27.50	$27.50

	A	B	C	D
1	**POWER USAGE**			
2				
3	**Expense**			
4	Version 1.0 Created 6/3/02, 9:53:02 AM			
5	South Dakota			
6	**100, 200, 300, & 400 Amp Cable**		**20, 30, 40, & 60 Amp Cable**	
7	Eqpt. electric usage	$25,048.30	Eqpt. electric usage	$25,048.30
8	A/C electricity to cool eqpt. he	$13,650.69	A/C electricity to cool eqpt. heat	$13,650.69
9	Total Expense	$38,699.00	Total Expense	$38,699.00
10	DC Power Usage	1000	DC Power Usage	1000
11	Cost Per Amp Per Month	**$3.22**	Cost Per Amp Per Month	**$1.61**
12				
13	**Eqpt. electric usage**		**A/C electricity to cool eqpt. heat**	
14	Electricity Cost Per Kw/Hour	$0.0473	Base Kw	52
15	Base Kw	52	# of Hours in a Year	8760
16	# of Hours in a Year	8760	BTU's/hour Factor to Watts	3.41
17	rect./inv. eff. / pf	86%	Air-Conditioning Equivalency/BTU	12000
18			A/C Electric Usage	2.23
19			Electricity Cost Per KW/Hour	$0.0473
20			kW Conversion factor	1000
21	Total Cost	$25,048.30	Total Cost	$13,650.69

POWER EQUIPMENT

Investment

South Dakota

Version 1.0 Created 6/3/02, 9:53:02 AM

Equipment	< 60 Amps	>= 60 Amps
DC Plant	$325,396	$226,389
Engine/Alternators	$81,999	$81,999
Commercial AC	$40,835	$40,835
Total	$448,229	$349,222
DC Power Usage	1000	1000
Equipment Cost Per Amp	**$448.23**	**$349.22**

Power equipment less than 60 amps includes BDFB. Power Equipment greater than or equal to 60 amps excludes BDFB.

DC Plant

Equipment	equipment cost	vendor E&I cost	total installed cost	replacement parts
Rectifiers - 6, 200 A	$29,329	$15,811	$45,140	$1,466
Power Monitor	$15,262	$11,491	$26,752	$305
400 A BDFB	$45,233	$25,278	$96,618	$2,262
Power Boards & internal cabling	$44,492	$19,825	$64,316	$890
Batteries - 4 strgs., 1680 A-hrs.	$73,039	$12,786	$85,825	$1,461
Sales Tax				$360
Total Cost With BDFB			$318,652	$6,744
Total Cost Without BDFB			$222,034	$4,355

Engine/Alternator(s)

Equipment	equipment cost	E&I cost	total installed cost	parts, fuel, etc.
Engine/Alternator - 90 KW	$39,829	$12,200	$52,029	$1,991
Diesel Fuel Tank - 350 gal.	$4,614	$3,737	$8,351	
Eng./Alt. AC Distribution	$10,667	$8,640	$19,307	$320
Sales Tax	$3,108			
Total Cost	$58,218	$24,577	$79,687	$2,311

Commercial AC

Equipment	equipment cost	E&I cost	total installed cost	parts
Comm. AC Distribution	$22,314	$18,074	**$40,388**	$446
Sales Tax	$1,259			
Total Cost	$23,573	$18,074	**$40,388**	$446

Assumptions

	A	B	C	D	E	F
51				CLEC pwr usage	50%	
52	base inverter KVA	10	KVA	ring plant size	100	VA
53	rect./inv. eff. / pf	86%		ring circuits	22	
54	DC power usage	1000	A	E&I default factor	1.81	
55	monitor circuits	$137	/mo.	350 gal fuel tank	$4,614	for 48+ hrs.
56	yearly monitoring	4	hrs.	CLECs fed from BDFB	55%	
57	A/C electric usage	2.23	KW/ton			

	A	B	C	D	E	F	G	H
1	Version 1.0 Created 6/3/02, 9:53:02 AM							
2	South Dakota							
3								
4	**Expense for Additional Backup AC Feed to equipment,**							
5	**in collocated space, from Backup AC Power Panel,**							
6	**Averaged for 5 actual sites**							
7								
8				**feed costs/ft.**				
9	Site	20 A, 1-ph	20 A, 3-ph	30 A, 1-ph	30 A, 3-ph	40 A, 1-ph	40 A, 3-ph	50 A, 1-ph
10								
11	Minneapolis	$8.37	$10.95	$8.62	$12.29	$9.94	$13.96	$11.12
12	Phoenix	$4.59	$5.58	$5.18	$7.17	$6.25	$8.65	$7.79
13	Salt Lake	$5.19	$6.35	$5.45	$7.13	$6.31	$8.62	$7.32
14	Seattle	$5.25	$6.30	$5.84	$7.91	$6.93	$9.40	$8.48
15	Denver	$5.51	$6.67	$6.10	$8.33	$7.23	$9.83	$8.79
16								
17	Average $/ft	**$5.78**	**$7.17**	**$6.24**	**$8.56**	**$7.33**	**$10.09**	**$8.70**
18								
19								
20	Site	50 A, 3-ph	60 A, 1-ph	60 A, 3-ph	100 A, 1-ph	100 A, 3-ph		
21								
22	Minneapolis	$15.46	$13.84	$19.85	$16.93	$27.58		
23	Phoenix	$11.09	$8.09	$11.56	$10.16	$15.63		
24	Salt Lake	$10.06	$9.28	$13.24	$11.55	$18.01		
25	Seattle	$11.84	$8.80	$12.36	$10.91	$16.55		
26	Denver	$12.28	$9.18	$12.90	$11.35	$17.32		
27								
28	Average $/ft	**$12.15**	**$9.84**	**$13.98**	**$12.18**	**$19.02**		
29								
30								
31	Assumptions							
32	base KW	52	KW					
33	base inverter KVA	10	KVA					
34	rectifier efficiency	0.86						
35	DC power usage	1000	A					
36	monitor circuits	137	/mo.					
37	yearly monitoring	4	hrs.					
38	A/C electric usage	2.23	KW/ton					
39	inflation/apprec. rate	0.02						
40	appreciated year	1998						
41	base cost year	1998						

	A	B	C	D	E	F
1	**Backup AC Power Usage**					
2	**Investment**					
3	Version 1.0 Created 6/3/02, 9:53:02 AM					
4	South Dakota	Investment	Rectifier Efficiency	Number of Volts	Watts to Kw Conversion	Investment Per Amp
5		A	B	C	D	E = ((A / B) * C / D
6	120 V	$2,153	86%	120	1000	**$300.37**
7	208 V, Single Phase	$2,153	86%	208	1000	**$520.64**
8	208 V, Three Phase	$2,153	86%	360	1000	**$900.70**
9	240 V, Single Phase	$2,153	86%	240	1000	**$600.74**
10	240 V, Three Phase	$2,153	86%	415	1000	**$1,039.27**
11	480 V, Three Phase	$2,153	86%	830	1000	**$2,078.55**
12						
13		Expense	Rectifier Efficiency	Number of Volts	Watts to Kw Conversion	Expense Per Amp
14		A	B	C	D	E = ((A / B) * C / D
15	120 V	$60	86%	120	1000	**$8.44**
16	208 V, Single Phase	$60	86%	208	1000	**$14.62**
17	208 V, Three Phase	$60	86%	360	1000	**$25.30**
18	240 V, Single Phase	$60	86%	240	1000	**$16.87**
19	240 V, Three Phase	$60	86%	415	1000	**$29.19**
20	480 V, Three Phase	$60	86%	830	1000	**$58.38**
21						
22						
23	**Engine/Alternator(s)**					
24						
25	**Equipment**	**equipment cost**	**E&I cost**	**total installed cost**	**parts, fuel, etc.**	
26						
27	Engine/Alternator - 90 KW	$39,829	$12,200	$52,029	$1,991	
28	Diesel Fuel Tank - 350 gal.	$4,614	$2,397	$7,011		
29	Eng./Alt. AC Distribution	$10,667	$5,542	$16,209	$320	
30	Sales Tax	$3,108			$130	
31	Total Cost	$58,218	$20,138	$75,248	$2,311	
32	Total Cost per kW			**$1,447.08**	**$44.45**	
33	**Commercial AC**					
34						
35	**Equipment**	**equipment cost**	**E&I cost**	**total installed cost**	**replacement parts**	
36						
37	Comm. AC Distribution	$22,314	$11,592	$33,906	$446	
38	Sales Tax	$1,259			$25	
39	Total Cost	$23,573	$11,592	$33,906	$471	
40	Total Cost per kW			**$652.04**	**$9.07**	

	A	B	C	D	E	F
41	**Usage**					
42	**Assumptions**					
43	Electricity Cost Per Kw-Hour	$0.0461	BTU's/hour Factor to Watts	3.41		
44	# of Hours in a Year	8760	Air-Conditioning Equivalency/BTU	12000		
45	rect./inv. eff. / pf	86%	A/C Electric Usage	2.23		
46	Months in a Year	12	kW Conversion factor	1000		
47	Eqpt. electric usage		$39.13			
48	A/C electricity to cool eqpt. heat		$21.33			
49						
50						
51	**Assumptions**					
52						
53	base KW	52	KW	CLEC pwr usage	50%	
54	base inverter KVA	10	KVA	ring plant size	100 VA	
55	rect./inv. eff. / pf	86%		ring circuits	22	
56	DC power usage	1000	A	E&I default factor	1.5195	
57	monitor circuits	$137	/mo.	350 gal fuel tank	$4,614 for 48+ hrs.	
58	yearly monitoring	4	hrs.	CLECs fed from BDFB	55%	
59	A/C electric usage	2.23	KW/ton			

	A	B	C	D	E	F
1	**Security Per Person**		Version 1.0 Created 6/3/02, 9:53:02 AM			
2			South Dakota			
3	**Investments**					
4			1998 INVESTMENT	EMPLOYEES REQUIRING CARDS	INVESTMENT PER PERSON	
5			A	B	C = A/B	
6	ID CARDS	EQUIPMENT (Note 1)	$248,835.02			
7		SUPPLIES (Note 2)	$200,604.19			
8		MAINTENANCE	$28,910.00			
9		**Total**	$478,349.21	50,000	$9.57	
10						
11	CARD ACCESS	CONTROLLER	$7,000.00			
12		ADDITIONAL CARD READER	$3,000.00			
13		**TOTAL**	$10,000.00	40	250	
14						
15						
16	**DIRECT EXPENSE**					
17			HOURS PER BADGE	LABOR RATE	EXPENSE PER BADGE	EXPENSE PER MONTH
18	ID CARDS		A	B	C = A x B	Note 3
19		HOURS FOR BADGING	0.25	$35.83	$8.96	**$0.41**
20						
23	**Physical Control Access Manager 1996 Actual Invoices					
24						
25	Notes:					
26	1. Equipment includes Server, 7 workstations, licensing of workstation, licensing of server, and 35 remote					
27	workstations					
28	2. Supplies include ribbon, top coat for badges, cleaner, hole punch, and cards					

	A	B	C	D	E
1	**CO SYNCHRONIZATION**				
2	SYNC-DCD523 Models				
3	Version 1.0 Created 6/3/02, 9:53:02 AM				
4	South Dakota			EF&I Expense	70% Fill
5					Expense/Port
6					
7	Model 1	(70 ports max)		$24,454.45	$332.75
8	Model 2	(100 ports max)		$15,308.45	$202.09
9	Model 3	(100 ports max)		$12,109.50	$156.39
10	Model 4	(100 ports max)		$9,053.66	$112.74
11	**Model 2 , most common**				
12					
13	**Avg. Expense/Port @ 70%**			**$202.09**	
14	**PRS Traceability Expense/Port**			**$10.71**	
15					
16	Power Expense/Month/Port			0.155	
17	Relay Rack Space			1.67	
18	Floor Space Rental/Month/Port			0.015	
19	Cable Racking			1.80	
20	Cabling to Network Element				
21	22 Ga. 2 Wire shielded cable			Wire Wrap	Connectorized
22	Expense/Foot			$0.15	$0.10
23	Average Run (ft)			200	200
24	Connector Assembly				$6.00
25	Install (hrs)			1.5	1.5
26	Install Expense/Hr			$39.61	$39.61
27	Total Install & Material Expense			$89.42	$85.42
28	**Avg. Expense/Install**			**$87.42**	
29					
30					
31	Expense for 1 CC or T1 port				
32	Avg. EF&I Expense/Equip/Port			$202.09	
33	Avg. Prs Expense			$10.71	
34	Avg. Expense, Cable Install to NE			$87.42	
35	RR Space			$1.67	
36	Cable Rack			$1.80	
37	**Total Expense/Port**			**$303.69**	

	A	B	C	D	E
1	**ITP**				
2	**Investment**				
3	Version 1.0 Created 6/3/02, 9:53:02 AM				
4	South Dakota	DS0	DS1	DS3	
5	ICDF Frame	$3,351.43	$4,973.69	$9,876.88	
6	Frame Capacity	40	18	8	
7	Frame Cost Per Unit	$83.79	$276.32	$1,234.61	
8	89 Block	$90.28			
9	DSX Panel		$335.14	$3,122.06	
10	Block/Panel Placement	$ 156.84	$ 106.69	$ 106.69	
11	Fill Factor	74%	73%	73%	
12	Capacity	100	56	24	
13	**Subtotal**	**$4.47**	**$17.57**	**$76.56**	
14					
15	COSMIC Frame	$47,538.00			
16	DSX Frame		$4,973.69	$9,876.88	
17	Capacity of Frames	1100	18	8	
18	Cost Per Unit of Frame	$43.22	$276.32	$1,234.61	
19	112 Block	$61.42			
20	DSX Panel		$335.14	$3,122.05	
21	Block/Panel Placement	$156.84	$106.69	$106.69	
22	Fill Factor	74%	73%	73%	
23	Meld Run Engineering	$600.00	N/A	N/A	
24	Capacity	100	56	24	
25	Meld Run Per Pair	$0.07	N/A	N/A	
26	**Subtotal**	**$9.60**	**$17.57**	**$254.76**	
27					
28	Cable Racking Per Ft	$99.14	$99.14	$99.14	
29	Aerial Support Per Ft	$92.53	$92.53	$92.53	
30	Capacity Per Rack	219	322	833	
31	Cable Rack Per Ft	$0.88	$0.60	$0.23	
32	Cable Per Ft	$1.54	$1.20	$0.94	
33	Placement of Cable Per Ft	$1.37	$1.37	$0.80	
34	# of Feet	100	55	54	
35	# of Cable Required	1	2	2	
36	# of Terminations Per Cable	100	28	1	
37	Fill Factor	74%	73%	73%	
38	**Total Cable Racking & Cable**	**$5.11**	**$17.02**	**$291.83**	
39					
40	**TOTAL**	**$19.18**	**$52.16**	**$623.15**	

	A	B	C
1	**Bay Support**		
2	Version 1.0 Created 6/3/02, 9:53:02 AM	Cageless	
3	South Dakota		
4	**Bay**		
5	Number of Bays	7.5	
6	Expense per Bay	$ 279.71	
7	Total Material Expense	$ 2,097.80	
8	45 Day Labor Expense per 1st Bay	$ 438.08	
9	45 Day Labor Expense add'l Bay	$ 320.48	
10	Total 45 Day Labor Expense	$ 2,521.20	
11	Total 45 Day Expense	$ 4,619.00	
12			
13	90 Day Labor Expense per Bay	$ 413.90	
14	90 Day Labor Expense add'l Bay	$ 302.79	
15	Total 90 Day Labor Expense	$ 2,382.04	
16	Total 90 Day Expense	$ 4,479.84	
17			
18			
19	**AC Outlet**		
20	Number of AC Outlets	2.25	
21	Expense per AC Outlet	$ 94.05	
22	Total Material	$ 211.61	
23	45 Day Labor Expense per Outlet	$ 88.12	
24	Total 45 Day Labor Expense	$ 198.27	
25	Total 45 Day Expense	$ 409.88	
26			
27	90 Day Labor Expense per Outlet	$ 83.26	
28	Total 90 Day Labor Expense	$ 187.34	
29	Total 90 Day Expense	$ 398.95	
30			
31			
32	**End Guard**		
33	Number of End Guards	3.5	
34	Expense per End Guard	$ 363.51	
35	Total Material Expense	$ 1,272.30	
36	45 Day Labor Expense per End Guard	$ 43.89	
37	Total 45 Day Labor Expense	$ 153.62	
38	Total 45 Day Expense	$ 1,425.91	
39			
40	90 Day Labor Expense per End Guard	$ 41.46	
41	Total 90 Day Labor Expense	$ 145.11	
42	Total 90 Day Expense	$ 1,417.41	
43			
44			
45	**Other**		
46	Number of Anchor Bolts	16.5	
47	Expense per Anchor Bolt Set	27.15	
48	Total	$ 447.98	
49	Number of Filler Panels	2.875	
50	Expense per Filler Panel	$ 198.08	
51	Total	$ 569.49	

	A	B	C
1	**Bay Support**		
2	Version 1.0 Created 6/3/02, 9:53:02 AM	Cageless	
3	South Dakota		
52	Number of Guard Rails	5	
53	Expense per Guard Rail	$ 66.56	
54	Total	$ 332.82	
55	Number of Mountings	28.25	
56	Expense per Mounting	$ 82.91	
57	Total	$ 2,342.09	
58	Number of Miscellaneous Items	12.75	
59	Expense per Miscellaneous Item	$ 0.40	
60	Total	$ 5.06	
61			
62	Grand Total Other	$ 3,697.43	
63			
64	Total Bay Construction Material	$ 7,279.14	
65			
66	45 Day Bay Construction	$ 10,152.23	
67			
68	90 Day Bay Construction	$ 9,993.62	
69			
70			
71			
72		45 Day	90 Day
73	Shipping	$ 1,018.28	$ 1,018.28
74	Tax	$ 572.59	$ 563.64
75	Total Bay Construction	$ 11,743.09	$ 11,575.54
76			
77			
78	Number of Jobs with Support Bays	8	
79	Number of Jobs in Earthquake states	12	
80	% of Jobs that Require Major Aerial Support	50%	
81	Cageless Collocators per office	3	
82	Number of Bays in Standard Configuration	2	
83	Number of Bays to Spread Expense Over	3	
84			
85		45 Day	90 Day
86	Bay Expense - 3 Bays	$ 1,304.79	$ 1,286.17
87	**Total Bay Expense - 2 Bays**	**$ 869.86**	**$ 857.45**
88			
89	**Additional Bay Expense**	**$ 434.93**	**$ 428.72**

Cell: A1
Comment: Bay Construction

Assumptions

- Used only in earthquake zones-WA,OR,UT,AZ,ID,WY,MO
- Bay supports will be required when major aerial support is installed
- The base cageless expense will include space and reinforcement for 2 bays
- The frequency of the need for support bays is directly related to the frequency for the need for major aerial support jobs
- The Covad jobs reflect a reasonable relationship between the need for support bays and the need for major aerial support jobs for all offices

Calculation

- Total bay expense per job (earthquake states only)= (total number of jobs with support bays/total number of jobs in earthquake states)*average expenses for jobs with support bays/# cageless collocators per office
- Expense per bay = total bay expense per job/# bays to spread expense over

Cell: A80
Comment: Victoria H. Bishara:

Only 50% of the jobs required additional Major Aerial support which is directly related to the additional Bay Construction required in earthquake states.

	A	B	C
1	**Cable Hole**		
2	Version 1.0 Created 6/3/02, 9:53:02 AM		
3	South Dakota		
4	**Fire Stop**		
5	Number of Fire Stop	0.83	
6	Expense per Fire Stop	$ 1.36	
7	Total Material Expense	$ 1.13	
8			
9	45 Day Labor Expense per Fire Stop	$ 265.37	
10	Total 45 Day Labor Expense	$ 220.06	
11	Total 45 Day Expense	$ 221.19	
12			
13	90 Day Labor Expense per Fire Stop	$ 250.72	
14	Total 90 Day Labor Expense	$ 207.91	
15	Total 90 Day Expense	$ 209.04	
16			
17	**Other**		
18	Number of Bags	0.24	
19	Expense per Bag	$ 29.34	
20	Total	$ 7.16	
21	Number of Labels	1.02	
22	Expense per Label	$ 0.22	
23	Total	$ 0.23	
24	Amount of Putty	1.73	
25	Expense of Putty	$ 27.02	
26	Total	$ 46.78	
27	Number of Sheets	0.37	
28	Expense per Sheet	$ 69.55	
29	Total	$ 25.44	
30	Amount of Tape	0.07	
31	Expense of Tape	$ 188.83	
32	Total	$ 13.82	
33	Number of miscellaneous items	0.44	
34	Expense per miscellaneous item	$ 2.64	
35	Total	$ 1.16	
36			
37	**Total Other**	**$ 94.59**	
38			
39	Total Material Expense	$ 95.71	
40			
41			
42		45 Day	90 Day
43	Cable Hole Expense	$ 315.78	$ 303.63
44	Shipping	$ 13.39	$ 13.39
45	Tax	$ 17.81	$ 17.12
46	Total Cable Hole Expense	**$ 346.98**	**$ 334.14**

Cell: A1
Component: Cable Hole

Assumptions

- Expenses are to open and shut hole to accommodate new cables.
- Must be done every time cable hole is used

Calculations

- 100% Nonrecurring dedicated
- Total average expense of jobs

	A	B	C	D
1	**Grounding**	Version 1.0 Created 6/3/02, 9:53:02 AM		
2		South Dakota		
3	**1/0 Cable**			
4	1/0 Cable Footage	0.98		
5	Expense per foot of 1/0 Cable	$ 3.12		
6	Total Material	$ 3.04		
7				
8	45 Day Labor Expense per foot of 1/0 Cable	$ 1.92		
9	Total 45 Day Labor Expense	$ 1.87		
10	Total 45 Day Expense	$ 4.92		
11				
12	90 Day Labor Expense per foot of 1/0 Cable	$ 1.81		
13	Total 90 Day Labor Expense	$ 1.77		
14	Total 90 Day Expense	$ 4.81		
15				
16	**# 2 Cable**			
17	#2 Cable Footage	34.88		
18	Expense per foot of #2 Cable	$ 1.56		
19	Total Material	$ 54.32		
20				
21	45 Day Labor Expense per foot of #2 Cable	$ 0.62		
22	Total 45 Day Labor Expense	$ 21.62		
23	Total 45 Day Expense	$ 75.94		
24				
25	90 Day Labor Expense per foot of #2 Cable	$ 0.59		
26	Total 90 Day Labor Expense	$ 20.58		
27	Total 90 Day Expense	$ 74.90		
28				
29	**4/0 Cable**			
30	4/0 Cable Footage	33.66		
31	Expense per foot of 4/0 Cable	$ 2.11		
32	Total Material	$ 71.15		
33				
34	45 Day Labor Expense per foot of 4/0 Cable	$ 3.64		
35	Total 45 Day Labor Expense	$ 122.52		
36	Total 45 Day Expense	$ 193.66		
37				
38	90 Day Labor Expense per foot of 4/0 Cable	$ 3.44		
39	Total 90 Day Labor Expense	$ 115.79		
40	Total 90 Day Expense	$ 186.93		
41				
42				
43	**# 6 Cable**			
44	#6 Cable Footage	0.61		
45	Expense per foot of #6 Cable	$ 0.67		
46	Total Material	$ 0.41		
47				
48	45 Day Labor Expense per foot of #6 Cable	$ 0.62		
49	Total 45 Day Labor Expense	$ 0.38		
50	Total 45 Day Expense	$ 0.79		

	A	B	C	D
1	**Grounding**	Version 1.0 Created 6/3/02, 9:53:02 AM		
2		South Dakota		
51				
52	90 Day Labor Expense per foot of #6 Cable	$ 0.59		
53	Total 90 Day Labor Expense	$ 0.36		
54	Total 90 Day Expense	$ 0.77		
55				
56	**750 Cable**			
57	750 Cable Footage	10.85		
58	Expense per foot of 750 Cable	$ 8.80		
59	Total Material	$ 95.52		
60				
61	45 Day Labor Expense per foot of 750 Cable	$ 14.36		
62	Total 45 Day Labor Expense	$ 155.86		
63	Total 45 Day Expense	$ 251.38		
64				
65	90 Day Labor Expense per foot of 750 Cable	$ 13.57		
66	Total 90 Day Labor Expense	$ 147.28		
67	Total 90 Day Expense	$ 242.80		
68				
69	**Alternative Racking**			
70	Amount of Alternative Racking	1.07		
71	Expense of Alternative Racking	$ 6.87		
72	Total Alternative Racking Material Expense	$ 7.37		
73				
74	Total Grounding Material Expense	$ 231.81		
75				
76				
77		45 Day	90 Day	
78	Expense for Grounding	$ 534.06	$ 517.58	
79	Shipping	$ 32.43	$ 32.43	
80	Tax	$ 30.12	$ 29.19	
81	Total Expense for Grounding	**$ 596.61**	**$ 579.20**	

Cell: A1
ment: Grounding

Assumptions

- Total charged to job

Calculations

- 100% Nonrecurring dedicated
- Total average expense of jobs

	A	B	C
1			
2	Version 1.0 Created 6/3/02, 9:53:02 AM		
3	South Dakota		
4	**Ground Bar**		
5	Number of Ground Bars	0.05	
6	expense per Ground Bar	$ 124.92	
7	Total Material expense	$ 6.09	
8			
9	45 Day Labor expense per Ground Bar	$ 234.25	
10	Total 45 Day Labor expense	$ 11.43	
11	Total 45 Day expense	$ 17.52	
12			
13	90 Day Labor expense per Ground Bar	$ 221.32	
14	Total 90 Day Labor expense	$ 10.80	
15	Total 90 Day expense	$ 16.89	
16			
17			
18		45 Day	90 Day
19	Ground Bar expense	$ 17.52	$ 16.89
20	Shipping	$ 0.85	$ 0.85
21	Tax	$ 0.99	$ 0.95
22	Total Ground Bar expense	$ 19.36	$ 18.69
23			
24	Number of Collocators per office	3	
25			
26	Ground Bar expense per Collocator	$ 6.45	$ 6.23

Cell: A4
nent: Ground Bar

Assumptions

- Ground bar will be required in 5% to 10% of the offices
- Ground bar is shared by all collocators

Calculations

- Ground bar Expense = Average ground bar expense (jobs)/# collocators

	A	B	C
1	Version 1.0 Created 6/3/02, 9:53:02 AM		
2	South Dakota		
3	**Miscellaneous**		
4	**Fiber Duct**		
5	Number of Ducts	0.20	
6	Expense per Duct	$ 3.06	
7	Total Material Expense	$ 0.60	
8			
9	45 Day Labor Expense per Duct	$ 18.13	
10	Total 45 Day Labor Expense	$ 3.54	
11	Total 45 Day Expense	$ 4.13	
12			
13	90 Day Labor Expense per Duct	$ 17.13	
14	Total 90 Day Labor Expense	$ 3.34	
15	Total 90 Day Expense	$ 3.94	
16			
17			
18	**Other**		
19	Number of Misc Materials	0.95	
20	Expense for Misc Materials	$ 803.18	
21	Total	$ 764.00	
22	Number of Bolt Kits	0.02	
23	Expense per Bolt Kit	$ 7.53	
24	Total	$ 0.18	
25	Number of Eqpt Nuts and Bolts	0.17	
26	Expense for Eqpt Nuts and Bolts	$ 5.71	
27	Total	$ 0.97	
28	Number of General Nuts and Bolts	17.12	
29	Expense for General Nuts and Bolts	$ 0.40	
30	Total	$ 6.77	
31	Amount of Paint	1.29	
32	Expense for Paint	$ 8.66	
33	Total	$ 11.19	
34	Number of Tags	2.02	
35	Expense per Tag	$ 2.86	
36	Total	$ 5.79	
37	Amount of Tape	0.34	
38	Expense for Tape	$ 9.92	
39	Total	$ 3.39	
40	Number of Miscellaneous Items	5.49	
41	Expense per Miscellaneous Item	$ 104.78	
42	Total	$ 575.01	
43			
44	Total Other	$ 1,367.31	
45			
46	Total Miscellaneous Material Expense	$ 1,367.91	
47			

	A	B	C
1	Version 1.0 Created 6/3/02, 9:53:02 AM		
2	South Dakota		
3	**Miscellaneous**		
48			
49		45 Day	90 Day
50	Miscellaneous Expense	$ 1,371.45	$ 1,371.25
51	Shipping	$ 191.36	$ 191.36
52	Taxes	$ 77.35	$ 77.34
53	Total Miscellaneous Expense	$ 1,640.15	$ 1,639.95
54			
55	% of Time that Misc Items are	42%	42%
56	Nonrecurring		
57	Number of Bays in Standard Configuration	2	
58	Number of Bays to Spread Expense Over	3	
59			
60			
61	**Total Miscellaneous Expense**	**$ 458.97**	**$ 458.91**
62			
63	Additional Bay	**$ 229.49**	**$ 229.46**

	A	B	
1	Equipment Category	**MOTOR VEHICLE**	
2	Material_USW ID		
3	Labor_Item Description		
4	C8WLC02	$	5.25
5	C8WLC03	$	30.96
6	C8WLC04	$	18.00
7	C8WLC05	$	26.13
8	C8WLC06	$	20.64
9	C8WLC07	$	1,354.78
10	C8WLC09	$	-
11	C8WLC11	$	34.72
12	C8WLC12	$	5.34
13	C8WLC13	$	-
14	C8WLC14	$	10.31
15	C8WLC15	$	26.12
16	C8WLC16	$	26.96
17	C8WLC18	$	20.64
18	C92LC19	$	1,142.88
19	C9MLC01	$	12.15
20	C9MLC05	$	8.10
21	C9MLC07	$	56.24
22	C9MLC08	$	167.40
23	C9MLC13	$	5.40
24	C9MLC16	$	8.10
25	C9MLC17	$	281.55
26	C9MLC21	$	3.59
27	C9MLC23	$	1,589.28
28	C9MLC24	$	584.55
29	C9MLC26	$	490.96
30	C9RLC05	$	855.98
31	C9RLC06	$	283.50
32	C9RLC08	$	837.43
33	C9RLC10	$	1,268.45
34	C9WLC16	$	165.85
35	C9WLC17	$	28.25
36			
37	TOTAL	$	9,369.51
38			
39	Average	**$**	**228.52**

Version 1.0 Created 6/3/02, 9:53:02 AM

South Dakota

Expenses for A & B DC Feeds to equipment,

in collocated space, from BDFB or power board,

Averaged for 5 actual sites

	45 Day				90 Day								
Costs for Virtual/Cageless Collocation	20 A	30 A	40 A	60 A	20 A	30 A	40 A	60 A	60 A PBD	100 A	200 A	300 A	400 A
Bellevue Sherwood, WA	$46.35	$46.46	$52.87	$52.99	$45.16	$45.27	$51.68	$51.80	$35.96	$57.97	$71.21	$124.41	$133.82
Seattle Duwamish, WA	$39.21	$44.76	$61.67	$61.74	$38.17	$43.72	$59.80	$59.87	$52.19	$63.48	$122.31	$222.15	$328.87
Westminster, CO	$43.36	$43.42	$61.80	$69.47	$42.34	$42.40	$59.86	$67.63	$51.51	$62.55	$122.17	$220.48	$326.92
Crystal, MN	$40.25	$57.30	$65.52	$115.71	$39.29	$55.48	$63.76	$112.39	$59.87	$108.53	$215.74	$322.06	$427.84
Portland Alpine, OR	$40.17	$55.93	$46.58	$63.97	$39.10	$45.47	$45.51	$62.05	$38.64	$54.21	$114.04	$125.85	$223.64
Average $/ft	$41.87	$49.57	$57.69	$72.78	$40.81	$46.47	$56.12	$70.75	$47.63	$69.35	$129.09	$202.99	$288.22
Averaged Cost	**$2,962**	**$3,507**	**$4,081**	**$5,148**	**$2,887**	**$3,287**	**$3,970**	**$5,005**	**$8,145**	**$11,859**	**$22,075**	**$34,711**	**$49,286**
Shipping	$165.74	$196.23	$228.35	$288.07	$161.55	$183.93	$222.14	$280.05	$455.79	$663.57	$1,235.22	$1,942.32	$2,757.83
Tax	$ 167.05	$ 197.79	$ 230.16	$ 290.36	$ 162.83	$ 185.39	$ 223.91	$ 282.27	$ 459.40	$ 668.83	$ 1,245.02	$ 1,957.73	$ 2,779.71
Total	$3,295	$3,901	$4,539	$5,727	$3,211	$3,656	$4,416	$5,567	$9,061	$13,191	$24,555	$38,612	$54,823

Assumptions				60A Average @ 0.35 BDFB and 0.65 PBD	$7,821
inflation/apprec. rate	2.0%				
appreciated year	1999				
base cost year	1999				
avg <60 A Physical run	83	ft.			
avg Virtual/Cageless ru	71	ft.	avg Virtual/Cageless run >60A	171	ft.
avg >60 A run	183	ft.			
60 A feeds from BDFB	35%				

			45 Day Installation		90 Day Installation	
1/0 thru 4/0 - #2 H-Tap	$4.66	ea.	$33.31	ea.	$31.47	ea.
350-750 kcmil - 1/0-4/0 I	$15.22	ea.	$47.82	ea.	$45.18	ea.
350-750 kcmil - #2 H-Tap	$29.32	ea.	$33.31	ea.	$31.47	ea.
kcmil - kcmil H-Tap	$30.54	ea.	$47.82	ea.	$45.18	ea.
#6 AWG lug	$0.24	ea.	$20.07	ea.	$18.96	ea.
#4 AWG lug	$1.22	ea.	$20.07	ea.	$18.96	ea.
#2 AWG lug	$2.26	ea.	$33.31	ea.	$31.47	ea.
1/0 lug	$2.68	ea.	$33.31	ea.	$31.47	ea.
2/0 lug	$4.15	ea.	$33.31	ea.	$31.47	ea.
4/0 lug	$5.80	ea.	$33.31	ea.	$31.47	ea.
350 kcmil lug	$10.72	ea.	$47.82	ea.	$45.18	ea.
500 kcmil lug	$12.44	ea.	$47.82	ea.	$45.18	ea.
750 kcmil lug	$28.76	ea.	$47.82	ea.	$45.18	ea.
#6 AWG cost	$0.55	/ft.	$2.11	/ft.	$1.99	/ft.
#4 AWG cost	$0.88	/ft.	$2.50	/ft.	$2.36	/ft.
#2 AWG cost	$1.97	/ft.	$2.50	/ft.	$2.36	/ft.
1/0 AWG cost	$3.12	/ft.	$3.83	/ft.	$3.62	/ft.
2/0 AWG cost	$3.31	/ft.	$3.83	/ft.	$3.62	/ft.
4/0 AWG cost	$4.67	/ft.	$3.83	/ft.	$3.62	/ft.
350 kcmil cost	$4.82	/ft.	$7.27	/ft.	$6.87	/ft.
500 kcmil cost	$7.16	/ft.	$7.27	/ft.	$6.87	/ft.
750 kcmil cost	$12.54	/ft.	$14.36	/ft.	$13.57	/ft.
25 A fuse	$17.51	ea.	$9.90	ea.	$9.90	ea.
30 A fuse	$18.22	ea.	$9.90	ea.	$9.90	ea.
40 A fuse	$18.94	ea.	$9.90	ea.	$9.90	ea.
50 A fuse	$19.65	ea.	$9.90	ea.	$9.90	ea.
60 A fuse	$20.37	ea.	$9.90	ea.	$9.90	ea.
75 A fuse	$21.29	ea.	$9.90	ea.	$9.90	ea.
75 A fuse/brkr avg	$47.40	ea.	$21.79	ea.	$21.79	ea.
80 A fuse/brkr avg	$48.70	ea.	$21.79	ea.	$21.79	ea.
90 A fuse/brkr avg	$75.15	ea.	$21.79	ea.	$21.79	ea.
100 A fuse/brkr avg	$92.40	ea.	$21.79	ea.	$21.79	ea.
125 A fuse/brkr avg	$104.75	ea.	$21.79	ea.	$21.79	ea.
150 A fuse/brkr avg	$116.75	ea.	$21.79	ea.	$21.79	ea.
200 A fuse/brkr avg	$148.00	ea.	$21.79	ea.	$21.79	ea.
250 A fuse/brkr avg	$179.00	ea.	$21.79	ea.	$21.79	ea.
300 A fuse/brkr avg	$218.15	ea.	$21.79	ea.	$21.79	ea.
400 A fuse/brkr avg	$235.80	ea.	$21.79	ea.	$21.79	ea.
500 A fuse/brkr avg	$273.75	ea.	$21.79	ea.	$21.79	ea.
600 A fuse/brkr avg	$307.50	ea.	$21.79	ea.	$21.79	ea.
H-Tap covers	$53.98	/job				
miscellaneous material	$183.13	/job				
Nuts & Bolts for Power	$9.14	/job				
Alarm fuses	$17.62	/job				
Heat Shrink	$17.48	/job				
Cable Tags	$79.25	/job				
BDFB loop drop	0.25	V				
PBD loop drop	1.00	V				

	A	B	C
1	Version 1.0 Created 6/3/02, 9:53:02 AM		
2	South Dakota		
3	**Lighting**		
4	**Fixtures**		
5	Number of Fixtures	2.56	
6	Expense per Fixture	$ 111.70	
7	Total Material Expense	$ 286.06	
8			
9	45 Day Labor Expense per Fixture	214.19	
10	Total 45 Day Labor Expense	$ 548.54	
11	Total 45 Day Expense	$ 834.59	
12			
13	90 Day Labor Expense per Fixture	202.37	
14	Total 90 Day Labor Expense	$ 518.26	
15	Total 90 Day Expense	$ 804.32	
16			
17			
18	**Lighting**		
19	Number of Lights	1.71	
20	Expense per Light	$ 103.96	
21	Total Material Expense	$ 177.50	
22			
23	45 Day Labor expense per Light	$ 214.19	
24	Total 45 Day Labor expense	$ 365.69	
25	Total 45 Day expense	$ 543.19	
26			
27			
28	90 Day Labor expense per Light	$ 202.37	
29	Total 90 Day Labor expense	$ 345.51	
30	Total 90 Day expense	$ 523.01	
31			
32			
33	**Cable**		
34	Number of Cables	13.66	
35	expense per Cable	$ 0.37	
36	Total Material expense	$ 5.05	
37			
38	45 Day Labor expense per Cable	$ 2.50	
39	Total 45 Day Labor expense	$ 8.54	
40	Total 45 Day expense	$ 13.59	
41			
42			
43	90 Day Labor expense per Cable	$ 2.36	
44	Total 90 Day Labor expense	$ 8.06	
45	Total 90 Day expense	$ 13.11	
46			
47			
48			
49	**Conduit Support**		
50	Number of Conduit Supports	0.05	
51	expense per Conduit Support	$ 248.19	

	A	B	C
1	Version 1.0 Created 6/3/02, 9:53:02 AM		
2	South Dakota		
52	Total Material expense	$ 12.11	
53			
54	45 Day Labor expense per Conduit Support	$ 18.61	
55	Total 45 Day Labor expense	$ 15.13	
56	Total 45 Day expense	$ 27.24	
57			
58			
59	90 Day Labor expense per Conduit Support	$ 17.58	
60	Total 90 Day Labor expense	$ 14.29	
61	Total 90 Day expense	$ 26.40	
62			
63			
64			
65	**Wire**		
66	Number of Wires	17.07	
67	expense per Wire	$ 0.25	
68	Total Material expense	$ 4.27	
69			
70	45 Day Labor expense per Wire	$ 2.39	
71	Total 45 Day Labor expense	$ 10.20	
72	Total 45 Day expense	$ 14.47	
73			
74			
75	90 Day Labor expense per Wire	$ 2.26	
76	Total 90 Day Labor expense	$ 9.65	
77	Total 90 Day expense	$ 13.91	
78			
79			
80			
81	**Other**		
82	Number of Conduit Supports	0.29	
83	expense per Conduit Support	$ 0.11	
84	Total	$ 0.03	
85	Number of Outlet Raceways	2.27	
86	expense per Outlet Raceway	$ 44.11	
87	Total	$ 100.06	
88	Number of Supports	8.15	
89	expense per Support	$ 8.42	
90	Total	$ 68.62	
91	Number of Switches	1.20	
92	Expense per Switch	$ 97.81	
93	Total	$ 116.89	
94	Number of Fittings	8.73	
95	Expense per Fitting	$ 4.74	
96	Total	$ 41.37	
97	Number of Fitting Supports	0.73	
98	Expense per Fitting Supports	$ 13.67	
99	Total	$ 10.00	
100	Number of Miscellaneous Items	5.22	

	A	B	C
1	Version 1.0 Created 6/3/02, 9:53:02 AM		
2	South Dakota		
101	Expense per Miscellaneous Item	$ 0.27	
102	Total	$ 1.42	
103			
104	Total Other	$ 338.40	
105			
106	Total Lighting Material Expense	$ 823.38	
107			
108			
109		45 Day	90 Day
110	Lighting Expense	$ 1,771.48	$ 1,719.15
111	Shipping	$ 115.18	$ 115.18
112	Tax	$ 99.91	$ 96.96
113	Total Lighting Expense	$ 1,986.57	$ 1,931.30
114			
115			
116			
117	Number of Light Fixtures	4.27	
118	% of time lighting is required	70%	
119	# of Lights per 8 Bays	3.00	
120	Fill Factor	75%	
121	# of Bays in Standard Configuration	2.00	
122	# of Bays	8	
123	Number of Bays to Spread Expense Over	3	
124			
125			
126		45 Day	90 Day
127	Lighting Expense	$ 325.80	$ 316.73
128	Total Bay Expense - 3 Bays	$ 325.80	$ 316.73
129			
130	**Total Bay Expense - 2 Bays**	**$ 217.20**	**$ 211.16**
131			
132	Each Additional Bay	**$ 108.60**	**$ 105.58**

Cell: A3
nent: Lighting

Assumptions

- 70% of the time new lighting will be required in an office
- Three lights will be required for each set of eight installed bays
- A 75% fill factor will be applied to each set of eight bays
- Two bays are to be included in the standard configuration
- Additional bays (more than 2) will require additional lighting increment

Calculations

- Expense Per Installed Light Fixture (from jobs) * 3 lights / 8 bays * 70% Occurrence / 75% fill = expense per bay
- Expense Per Bay * 2 = Bay expense in Flat Rate

	A	B	C	D	E
1	**Overall Aerial Support**	Cageless		Caged	
2	Version 1.0 Created 6/3/02, 9:53:02 AM	Major Jobs	Minor Jobs	Major Jobs	Minor Jobs
3	South Dakota				
4	**Aux Frame Channel**				
5	Number of 10 foot channels	60	7	32	5
6	Number of 20 foot channels	7	1	16	3
7	Expense per 10 foot Channel	$ 18.00	$ 12.94	$ 18.00	$ 12.94
8	Expense per 20 foot Channel	$ 50.10	$ 38.05	$ 50.10	$ 38.05
9	Total Material Expense	$ 1,435.14	$ 110.37	$ 1,377.83	$ 159.82
10	45 Day Labor Expense per 10' Channel	$ 3,766.74	$ 433.13		
11	45 Day Labor Expense per 20' Channel	$ 901.89	$ 70.88		
12	Total 45 Day Labor Expense	$ 4,668.63	$ 504.00		
13	Total 45 Day Expense	$ 6,103.77	$ 614.37		
14					
15	90 Day Labor Expense per 10' Channel	$ 3,560.46	$ 409.41	$ 1,905.60	$ 297.75
16	90 Day Labor Expense per 20' Channel	$ 852.51	$ 66.99	$ 1,905.60	$ 297.75
17	Total 90 Day Labor Expense	$ 4,412.97	$ 476.40	$ 3,811.20	$ 595.50
18	Total 90 Day Expense	$ 5,848.11	$ 586.77	$ 5,189.03	$ 755.32
19					
20					
21	**U Channel**				
22	Number of U Channels	1	0	1	0
23	Expense per U Channel	$ 123.25	$ -	$ 123.25	$ -
24	Total Material Expense	$ 110.28	$ -	$ 110.28	$ -
25	45 Day Labor Expense per foot	$ 20.34	$ 20.34		
26	Total 45 Day Labor Expense	$ 363.98	$ -		
27	Total 45 Day Expense	$ 474.26	$ -		
28					
29	90 Day Labor Expense per foot	$ 19.22	$ 11.91	$ 19.22	$ 11.91
30	Total 90 Day Labor Expense	$ 343.94	$ -	$ 343.94	$ -
31	Total 90 Day Expense	$ 454.22	$ -	$ 454.22	$ -
32					
33					
34	Other				
35	Number of Aux Frame Fittings	28.79	3.56	20.64	3.59
36	Expense per Aux Frame Fitting	$ 20.27	$ 19.23	$ 20.27	$ 19.23
37	Total	$ 583.55	$ 68.51	$ 418.40	$ 69.08
38	Number of Aux Frames Support	68.47	18.44	49.09	18.59
39	Expense per Aux Frame Support	$ 6.90	$ 5.06	$ 6.90	$ 5.06
40	Total	$ 472.34	$ 93.23	$ 338.66	$ 94.01
41	Number of Aux Frame Nuts and Bolts	140.47	8.13	100.72	8.19
42	Expense of Aux Frame Nuts and Bolts	$ 0.39	$ 0.29	$ 0.39	$ 0.29
43	Total	$ 55.20	$ 2.37	$ 39.58	$ 2.39
44	Number of Cable Racks Support	0.21	0.00	0.15	0.00
45	Expense per Cable Rack Support	$ 24.19	$ -	$ 24.19	$ -
46	Total	$ 5.09	$ -	$ 3.65	$ -
47	Amount of Insulation	5.47	0.88	3.92	0.88
48	Expense per Insulation	$ 2.63	$ 2.42	$ 2.63	$ 2.42
49	Total	$ 14.37	$ 2.12	$ 10.31	$ 2.14
50	Number of Miscellaneous Items	17.47	0.13	12.53	0.13
51	Expense per miscellaneous item	$ 11.24	$ 6.58	$ 11.24	$ 6.58

	A	B	C	D	E
1	**Overall Aerial Support**	Cageless		Caged	
2	Version 1.0 Created 6/3/02, 9:53:02 AM	Major Jobs	Minor Jobs	Major Jobs	Minor Jobs
3	South Dakota				
52	Total	$ 196.39	$ 0.82	$ 140.81	$ 0.83
53	Number of Nuts and Bolts - cable racking	0.42	0.25	0.30	0.25
54	Expense of Nuts and Bolts - cable racking	$ 0.52	$ 0.52	$ 0.52	$ 0.52
55	Total	$ 0.22	$ 0.13	$ 0.16	$ 0.13
56	Number of General Support items	1.58	0.00	1.13	0.00
57	Expense of General Support items	$ 1.95	$ -	$ 1.95	$ -
58	Total	$ 3.08	$ -	$ 2.21	$ -
59	Number of U-Channel - Other Items	0.58	7.50	1.06	7.56
60	Expense of U-Channel - Other Items	$ 18.46	$ 2.18	$ 18.46	$ 2.18
61	Total	$ 10.68	$ 16.37	$ 19.50	$ 16.51
62	Number of U-Channel Fittings	0.00	0.25	0.00	0.25
63	Expense of U-Channel Fitting	$ -	$ 2.78	$ -	$ 2.78
64	Total	$ -	$ 0.70	$ -	$ 0.70
65	Grand Total Other	$ 1,340.94	$ 184.24	$ 973.27	$ 185.78
66					
67	Total Overall Aerial Support Material	$ 2,886.36	$ 294.62	$ 2,461.38	$ 345.61
68					
69	Total 45 Day Labor	$ 5,032.61	$ 504.00		
70	Total 90 Day Labor	$ 4,867.18	$ 476.40	$ 4,265.42	$ 595.50
71					
72	Total 45 Day Overall Aerial Support	$ 7,918.97	$ 798.62		
73	Total 90 Day Overall Aerial Support	$ 7,643.27	$ 771.02	$ 6,616.51	$ 941.11
74					
75	Shipping	$ 403.77	$ 41.21	$ 344.32	$ 48.35
76	Tax 45 day	$ 446.63	$ 45.04		
77	Tax 90 Day	$ 431.08	$ 43.49	$ 373.17	$ 53.08
78	Grand Total Overall Aerial Support-45 day	$ 8,769.37	$ 884.87		
79	Grand Total Overall Aerial Support-90 day	$ 8,478.12	$ 855.71	$ 7,334.01	$ 1,042.53
80					
81					
82	% of Jobs that Require Major Aerial Support	50%		100%	
83	Average Number of Collocators in an Office	3		3	
84	% of Jobs Requiring Any Aerial Support	85%		85%	
85					
86		45 Day	90 Day	90 Day	
87	Total Overall Aerial Support	$ 2,069.46	$ 2,000.89	$ 2,987.12	
88					
89	% of Aerial Support used for Cable Racking	75%		75%	
90	% of Aerial Support used for Panel EICT	12.50%		12.50%	
91					

	A	B	C	D	E
1	**Overall Aerial Support**	Cageless		Caged	
2	Version 1.0 Created 6/3/02, 9:53:02 AM	Major Jobs	Minor Jobs	Major Jobs	Minor Jobs
3	South Dakota				
92		45 Day	90 Day	90 Day	
93	Amount Assigned to Cable Racking	$ 1,552.10	$ 1,500.67	$ 2,240.34	
94	Amount Assigned to Panel EICT	$ 258.68	$ 250.11	$ 373.39	
95	Amount Remaining in Aerial Support	$ 258.68	$ 250.11	$ 373.39	
96					
97	Number of Bays to Spread Expense Over	3			
98	Number of Bays in Standard Configuration	2			
99					
100					
101	Total Expense for Overall Aerial Support-2 Bay	**$ 172.46**	**$ 166.74**	**$ 373.39**	
102					
103	Additional Bay Expense	**$ 86.23**	**$ 83.37**		

Cell: A1
nent: Aerial Support

Assumptions

- A major aerial support job costs in excess of $1,000
- All other jobs are minor jobs
- Major jobs will occur in 50% of the offices when the first collocator enters
- Minor jobs will occur on all collocations with the same frequency as COVAD jobs
- 75% Aerial support is for cable racking

Calculations

- Cost for Aerial Support = A * average cost for major aerial support jobs+((total number of jobs with any aerial support/total jobs studied)-A)* cost of minor aerial support jobs, Where: A=50% offices requiring major support
- Standard job cost=Cost for aerial support/# bays * # bays in standard configuration jobs/# collocators per office

	A	B	C	D	E
1					
2	**Engineering**				
3		All Jobs		2 highest and	
4	**Job ID**			2 lowest jobs removed	
5	C8WLC09	$ 1,163.00			
6	C9RLC06	$ 2,713.64			
7	C9WLC17	$ 3,963.49		$ 3,963.49	
8	C8WLC18	$ 5,761.44		$ 5,761.44	
9	C9MLC16	$ 6,182.22		$ 6,182.22	
10	C8WLC19	$ 6,669.04		$ 6,669.04	
11	C9RLC08	$ 6,754.10		$ 6,754.10	
12	C9MLC13	$ 6,964.54		$ 6,964.54	
13	C8WLC03	$ 7,048.14		$ 7,048.14	
14	C9MLC06	$ 7,290.89		$ 7,290.89	
15	C9MLC01	$ 7,354.58		$ 7,354.58	
16	C9WLC16	$ 7,576.25		$ 7,576.25	
17	C8WLC20	$ 7,637.24		$ 7,637.24	
18	C8WLC13	$ 7,725.58		$ 7,725.58	
19	C9MLC08	$ 7,747.36		$ 7,747.36	
20	C9MLC19	$ 8,579.03		$ 8,579.03	
21	C9MLC05	$ 8,791.67		$ 8,791.67	
22	C8WLC12	$ 8,904.49		$ 8,904.49	
23	C8WLC17	$ 8,988.83		$ 8,988.83	
24	C9MLC21	$ 9,288.53		$ 9,288.53	
25	C92LC12	$ 9,822.74		$ 9,822.74	
26	C9RLC05	$ 9,898.48		$ 9,898.48	
27	C8WLC14	$ 10,609.28		$ 10,609.28	
28	C8WLC06	$ 10,721.26		$ 10,721.26	
29	C9MLC07	$ 10,839.04		$ 10,839.04	
30	C9MLC17	$ 10,860.84		$ 10,860.84	
31	C9MLC20	$ 10,930.64		$ 10,930.64	
32	C8WLC07	$ 11,379.69		$ 11,379.69	
33	C8WLC15	$ 12,747.86		$ 12,747.86	
34	C8WLC04	$ 13,012.52		$ 13,012.52	
35	C92LC19	$ 13,064.78		$ 13,064.78	
36	C8WLC08	$ 13,151.00		$ 13,151.00	
37	C8WLC02	$ 13,387.69		$ 13,387.69	
38	C8WLC16	$ 13,423.84		$ 13,423.84	
39	C8WLC21	$ 15,822.91		$ 15,822.91	
40	C8WLC11	$ 17,474.02		$ 17,474.02	
41	C8WLC05	$ 17,474.17		$ 17,474.17	
42	C9RLC10	$ 17,601.95		$ 17,601.95	
43	C9MLC23	$ 20,545.88		$ 20,545.88	
44	C9MLC24	$ 21,057.80			
45	C9MLC26	$ 25,968.00			
46	TOTAL	$ 436,898.45		$ 385,996.01	
47					
48	Average	**$ 10,656.06**		**$ 10,432.32**	

Cell: A2
ment: Engineering

Assumptions

- Total charged to job.
- Dedicated to Collocator
- Not shared

Calculations

- 100% Nonrecurring dedicated
- Total average expense of jobs with 2 highest and 2 lowest jobs removed

	A	B	C	D	E
1	**Cable Racking**	**2.1 Cageless**		**3.1 Caged**	
2	Version 1.0 Created 6/3/02, 9:53:02 AM				
3	South Dakota	Major Jobs	Minor Jobs	Major Jobs	Minor Jobs
4	**Cable Racking Channel**				
5	Number of 10' Channels	9.5	1.3	8	2.5
6	Expense per 10' Channel	$ 74.52	$ 69.17	$ 74.52	$ 69.17
7	Total Material Expense	$ 707.96	$ 89.92	$ 596.17	$ 172.93
8	45 Day Labor Expense per foot	$ 22.57	$ 22.57	$ 22.57	$ 22.57
9	Total 45 Day Labor Expense	$ 2,144.15	$ 293.41	$ 1,805.60	$ 564.25
10	Total 45 Day Expense	$ 2,852.11	$ 383.33	$ 2,401.77	$ 737.18
11					
12	90 Day Labor Expense per foot	$ 21.32	$ 21.32	$ 21.32	$ 21.32
13	Total 90 Day Labor Expense	$ 2,025.40	$ 277.16	$ 1,705.60	$ 533.00
14	Total 90 Day Expense	$ 2,733.36	$ 367.08	$ 2,301.77	$ 705.93
15					
16					
17	**Cable Racking Ladder**				
18	Number of 10' Ladders	1.6	0.1		
19	Expense per 10' Ladder	$ 29.24	$ 23.76		
20	Total Material Expense	$ 47.24	$ 2.38		
21	45 Day Labor Expense per foot	$ 22.57	$ 22.57		
22	Total 45 Day Labor Expense	$ 364.59	$ 22.57		
23	Total 45 Day Expense	$ 411.83	$ 24.95		
24					
25	90 Day Labor Expense per foot	$ 21.32	$ 21.32		
26	Total 90 Day Labor Expense	$ 344.40	$ 21.32		
27	Total 90 Day Expense	$ 391.64	$ 23.70		
28					
29					
30	**Horn**				
31	Number of Horns	29.3	2.4	24.6	4.6
32	Expense per Horn	$ 13.93	$ 15.70	$ 13.93	$ 15.70
33	Total Material Expense	$ 407.75	$ 37.68	$ 343.37	$ 72.46
34	45 Day Labor Expense per Horn	$ 6.64	$ 6.64		
35	Total 45 Day Labor Expense	$ 194.35	$ 15.94		
36	Total 45 Day Expense	$ 602.09	$ 53.62		
37					
38					
39	90 Day Labor Expense per Horn	$ 6.27	$ 6.27	$ 6.27	$ 6.27
40	Total 90 Day Labor Expense	$ 183.52	$ 15.05	$ 154.54	$ 28.94
41	Total 90 Day Expense	$ 591.26	$ 52.73	$ 497.91	$ 101.40
42					

	A	B	C	D	E
1	**Cable Racking**	**2.1 Cageless**		**3.1 Caged**	
2	Version 1.0 Created 6/3/02, 9:53:02 AM				
3	South Dakota	Major Jobs	Minor Jobs	Major Jobs	Minor Jobs
43					
44	**Pan**				
45	Amount of Pan	7.2	1.4	6.0	2.7
46	Expense for Pan	$ 26.31	$ 28.77	$ 26.31	$ 28.77
47	Total Material Expense	$ 188.21	$ 40.28	$ 158.49	$ 77.46
48	45 Day Labor Expense per Pan	$ 12.98	$ 12.98		
49	Total 45 Day Labor Expense	$ 928.57	$ 181.72		
50	Total 45 Day Expense	$ 1,116.77	$ 222.00		
51					
52	90 Day Labor Expense per Pan	$ 12.27	$ 12.27	$ 12.27	$ 12.27
53	Total 90 Day Labor Expense	$ 877.78	$ 171.78	$ 739.18	$ 330.35
54	Total 90 Day Expense	$ 1,065.98	$ 212.06	$ 897.67	$ 407.80
55					
56	**Other**				
57	Number of Systems Ladders	10.6	1	8.9	1.2
58	Expense per Systems Ladder	$ 4.91	$ 2.65	$ 4.91	$ 2.65
59	Total	$ 52.17	$ 1.59	$ 43.93	$ 3.05
60	Number of Brackets	17.7	10.8	14.9	20.77
61	Expense per Bracket	$ 12.05	$ 13.60	$ 12.05	$ 13.60
62	Total	$ 213.70	$ 146.85	$ 179.95	$ 282.41
63	Number of Fittings	51.1	35	43.0	67.31
64	Expense per Fitting	$ 8.04	$ 6.84	$ 8.04	$ 6.84
65	Total	$ 410.84	$ 239.38	$ 345.97	$ 460.34
66	Number of Insulators	3.7	1.6	3.1	3.08
67	Expense per Insulator	$ 1.04	$ 0.64	$ 1.04	$ 0.64
68	Total	$ 3.83	$ 1.02	$ 3.22	$ 1.97
69	Number of Cable Racking Kits	9.1	3.8	7.7	7.31
70	Expense per Cable Racking Kit	$ 60.01	$ 48.92	$ 60.01	$ 48.92
71	Total	$ 546.99	$ 185.90	$ 460.63	$ 357.50
72	Number of Miscellaneous Items	142.7	40	120.2	76.92307692
73	Expense per Miscellaneous Item	$ 0.10	$ 0.02	$ 0.10	$ 0.02
74	Total	$ 14.36	$ 0.79	$ 12.09	$ 1.51
75	Number of Support Items	33.4	8.2	28.1	15.76923077
76	Expense per Support Item	$ 7.55	$ 6.14	$ 7.55	$ 6.14
77	Total	$ 252.39	$ 50.38	$ 0.43	$ 0.43
78	Number of Nuts and Bolts	16.8	20.1	0.2	0.173538462
79	Expense per set of Nuts and Bolts	$ 0.47	$ 0.49	$ 0.47	$ 0.49
80	Total	$ 7.91	$ 9.87	$ 0.08	$ 0.09
81					
82	Grand Total Other	$ 1,502.18	$ 635.78	$ 1,046.31	$ 1,107.30
83					
84	Total Cable Racking Material	$ 2,806.09	$ 803.66	$ 2,144.34	$ 1,430.15
85					
86	Total 45 Day Cable Racking	$ 6,484.99	$ 1,319.67		
87	Total 90 Day Cable Racking	$ 6,284.43	$ 1,291.34	$ 4,743.66	$ 2,322.43
88					
89	Shipping	$ 392.54	$ 112.42	$ 299.97	$ 200.06
90	Tax 45 Day	$ 365.75	$ 74.43		

	A	B	C	D	E
1	**Cable Racking**	**2.1 Cageless**		**3.1 Caged**	
2	Version 1.0 Created 6/3/02, 9:53:02 AM				
3	South Dakota	Major Jobs	Minor Jobs	Major Jobs	Minor Jobs
91	Tax 90 Day	$ 354.44	$ 72.83	$ 267.54	$ 130.99
92	Grand Total Cable Racking -45 day	$ 7,243.29	$ 1,506.52		
93	Grand Total Cable Racking -90 day	$ 7,031.41	$ 1,476.60	$ 5,311.18	$ 2,653.48
94					
95					
96	% of Jobs Requiring Major Cable Racking	50%		100%	
97	Average Number of Collocators in an Office	3		3	
98	Number of Bays to Spread Expense over	3			
99	Number of Bays in Standard Configuration	2			
100	% of Jobs Requiring Both Major Aerial and Major Cable Racking	73%		73%	
101					
102	% of Jobs Requiring some Cable Racking	88%		88%	
103					
104		45 Day	90 Day	90 Day	
105	Total Cable Racking 3 Bays	$ 2,631.19	$ 2,563.41	$ 3,542.17	
106					
107	% of Aerial Support used for Cable Racking	75%		75%	
108	Amount of Aerial Support assigned	$ 1,552.10	$ 1,500.67	$ 2,240.34	
109					
110					
111	**Total Expense for Cable Racking 2 Bays**	**$ 2,788.85**	**$ 2,709.39**	**$ 5,782.51**	
112					
113	**Additional Bay Expense**	**$ 1,394.43**	**$ 1,354.69**		
114					

Cell: A1
ment: Cable Racking

Assumptions

- Major cable racking job is a job requiring 4 or more racking strands.
- All other jobs with cable racking costs are minor jobs
- Minor jobs will occur on all collocations with the same frequency as COVAD jobs
- The frequency of the need for major cable racking jobs is directly related to the frequency for the need for major aerial support jobs
- The COVAD jobs reflect a reasonable relationship between major cable racking jobs and major aerial support jobs for all offices
- Cable racking costs will be determined on a per collocator basis

Calculations

- Cost for cable racking = B * average cost for a major cable racking job + ((total number of jobs with cable racking/total number of jobs)- B)* coverage cost of minor cable racking jobs, Where: B=(Number of major cable racking jobs/ Number of major aerial support jobs)*% of the time a major aerial support job is required/# collocators

	A	B	C	D
1	**Space Rent**			
2	**Investment**			
3	Version 1.0 Created 6/3/02, 9:53:02 AM			
4	South Dakota			
5	Land Investment		**$7.20**	
6	Building Investment		**$163.24**	
7				
8				
9	**SUMMARY OF NUMBERS**			
10	Capital $ for RRCN			
11	Typical Central Office Model	=	8000	RSF
12	RS Means Median Unit Cost 4500 GSF	=	$135.00	GSF
13	Building Construction RRCN	=	$130.82	RSF
14	Site Work & Landscape	=	$18.86	RSF
15	97 Construction Cost Subtotal	=	$149.68	RSF
16	RS Means 97 to 98 Cost Escalation	=	2.50%	
17	98 Construction Cost Subtotal	=	$153.42	RSF
18	Land Purchase 1 Acre	=	$7.20	RSF
19	Architectural Fee 15%	=	$24.09	RSF
20	USWC Project Management 5%	=	$9.24	RSF
21	Typical CO Project RRCN	=	$193.95	RSF
22	Mechanical & Electrical Delivery Cost Adjustment	=	($23.51)	RSF
23	Typical CO Project ARRCN	=	$170.44	RSF
24	**RSF = Rentable Square Foot			
25	**RRCN = Rentable Reconstruction Cost New			
26	**ARRCN = Adjusted Rentable Reconstruction Cost New			

	A	B	C	D	E	F
	Version 1.0 Created 6/3/02, 9:53:02 AM					
2						
3		**Quotation Preparation Fee**				
4						
5					NonRecurring Expense	
6						
7		2.3 Quotation Preparation Fee - Cageless			$ 3,174.25	
8						
9		3.4 Quotation Preparation Fee - Caged			$ 3,451.33	

Costs for A & B DC Feeds to equipment,

in collocated space, from BDFB or power board,

Averaged for 5 actual sites

Version 1.0 Created 6/3/02, 9:53:02 AM

South Dakota

Site	Costs for Caged Physical Collocation								
	20 A	30 A	40 A	60 A BDFB	60 A PBD	100 A	200 A	300 A	400 A
Bellevue Sherwood, WA	$42.45	$43.37	$48.92	$66.28	$35.96	$57.97	$71.21	$124.41	$133.82
Seattle Duwamish, WA	$42.12	$42.17	$57.89	$67.35	$52.19	$63.48	$122.31	$222.15	$328.87
Westminster, CO	$40.98	$56.45	$56.47	$65.92	$51.51	$62.55	$122.17	$220.48	$326.92
Crystal, MN	$53.24	$53.27	$62.67	$111.25	$59.87	$108.53	$215.74	$322.06	$427.84
Portland Alpine, OR	$38.17	$43.72	$59.80	$59.87	$38.64	$54.21	$114.04	$125.85	$223.64
Average $/ft	$43.39	$47.79	$57.15	$74.13	$47.63	$69.35	$129.09	$202.99	$288.22
Averaged Cost	**$3,589**	**$3,953**	**$4,727**	**$6,132**	**$8,723**	**$12,700**	**$23,640**	**$37,173**	**$52,780**
Shipping	$200.84	$221.22	$264.53	$343.15	$488.10	$710.62	$1,322.81	$2,080.04	$2,953.38
Tax	$ 202.43	$ 222.98	$ 266.63	$ 345.87	$ 491.98	$ 716.26	$ 1,333.30	$ 2,096.54	$ 2,976.81
Total	$3,993	$4,398	$5,259	$6,821	$9,703	$14,126	$26,296	$41,349	$58,711

Average 60 A Caged Physical feed cost **$7,804**

Shipping	$436.67
Tax	$ 440.13
Total	**$8,680.55**

Assumptions		
inflation/apprec. rate	2.0%	
appreciated year	1999	
base cost year	1999	
avg <60 A Physical run	83	ft.
avg Virtual/Cageless run	71	ft.
avg >60 A run	183	ft.
60 A feeds from BDFB	35%	

			Installation	
1/0 thru 4/0 - #2 H-Tap	$4.66	ea.	$31.47	ea.
350-750 kcmil - 1/0-4/0 H-Tap	$15.22	ea.	$45.18	ea.
350-750 kcmil - #2 H-Tap	$29.32	ea.	$31.47	ea.
kcmil - kcmil H-Tap	$30.54	ea.	$45.18	ea.
#6 AWG lug	$0.24	ea.	$18.96	ea.
#4 AWG lug	$1.22	ea.	$18.96	ea.
#2 AWG lug	$2.26	ea.	$31.47	ea.
1/0 lug	$2.68	ea.	$31.47	ea.
2/0 lug	$4.49	ea.	$31.47	ea.
4/0 lug	$10.72	ea.	$31.47	ea.
350 kcmil lug	$5.80	ea.	$45.18	ea.
500 kcmil lug	$12.44	ea.	$45.18	ea.
750 kcmil lug	$34.22	ea.	$45.18	ea.
#6 AWG cost	$0.55	/ft.	$1.99	/ft.
#4 AWG cost	$0.88	/ft.	$2.36	/ft.
#2 AWG cost	$1.97	/ft.	$2.36	/ft.
1/0 AWG cost	$3.12	/ft.	$3.62	/ft.
2/0 AWG cost	$3.31	/ft.	$3.62	/ft.
4/0 AWG cost	$4.67	/ft.	$3.62	/ft.
350 kcmil cost	$4.82	/ft.	$6.87	/ft.
500 kcmil cost	$7.16	/ft.	$6.87	/ft.
750 kcmil cost	$19.57	/ft.	$13.57	/ft.
25 A fuse	$17.51	ea.	$9.90	ea.
30 A fuse	$18.22	ea.	$9.90	ea.
40 A fuse	$20.37	ea.	$9.90	ea.
50 A fuse	$19.65	ea.	$9.90	ea.
60 A fuse	$18.94	ea.	$9.90	ea.
75 A fuse	$21.29	ea.	$9.90	ea.
75 A fuse/brkr avg	$47.40	ea.	$21.79	ea.
80 A fuse/brkr avg	$48.70	ea.	$21.79	ea.

	A	B	C	D	E	F	G	H	I	J
62	90 A fuse/brkr avg	$75.15	ea.	$21.79	ea.					
63	100 A fuse/brkr avg	$92.40	ea.	$21.79	ea.					
64	125 A fuse/brkr avg	$104.75	ea.	$21.79	ea.					
65	150 A fuse/brkr avg	$116.75	ea.	$21.79	ea.					
66	200 A fuse/brkr avg	$148.00	ea.	$21.79	ea.					
67	250 A fuse/brkr avg	$179.00	ea.	$21.79	ea.					
68	300 A fuse/brkr avg	$218.15	ea.	$21.79	ea.					
69	400 A fuse/brkr avg	$235.80	ea.	$21.79	ea.					
70	500 A fuse/brkr avg	$273.75	ea.	$21.79	ea.					
71	600 A fuse/brkr avg	$307.50	ea.	$21.79	ea.					
72	H-Tap covers	$53.98	/job							
73	miscellaneous material costs	$182.27	/job							
74	Nuts & Bolts for Power	$9.14	/job							
75	Alarm fuses	$17.10	/job							
76	Heat Shrink	$17.48	/job							
77	Cable Tags	$79.25	/job							
78	BDFB loop drop	0.25	V							
79	PBD loop drop	1.00	V							

Costs for Grounding feed and CLGB to CLEC Area,

in collocated space, from nearest COGB,

Averaged for 5 actual sites

Version 1.0 Created 6/3/02, 9:53:02 AM

South Dakota

cable used	# 2 AWG	1/0 AWG	4/0 AWG	350 kcmil	500 kcmil	750 kcmil
	Cost/ft.					
Denver Sullivan	$7.65	$14.56	$16.82	$20.85	$23.70	$35.29
Burnsville, MN	$5.99	$10.38	$12.26	$15.96	$18.53	$28.38
Phoenix	$5.53	$9.23	$11.00	$14.60	$17.10	$26.47
Seattle	$5.66	$9.56	$11.36	$14.99	$17.51	$27.02
Portland Atlantic	$6.22	$10.96	$12.89	$16.64	$19.25	$29.35
Average $/ft.	**$6.21**	**$10.94**	**$12.87**	**$16.61**	**$19.22**	**$29.30**
Shipping	$0.31	$0.55	$0.65	$0.84	$0.97	$1.48
Tax	$0.35	$0.62	$0.73	$0.94	$1.08	$1.65
Total	**$6.87**	**$12.10**	**$14.24**	**$18.38**	**$21.27**	**$32.43**

(averaged costs are appreciated for inflation if costs are not from the current year)

Assumptions			Installation	
inflation/apprec. rate	2%			
appreciated year	1999			
base cost year	1999			
green #6 AWG cost	$0.67	/ft.	$1.99	/ft.
green #2 AWG cost	$2.19	/ft.	$2.36	/ft.
green 1/0 AWG cost	$3.12	/ft.	$3.62	/ft.
green 4/0 AWG cost	$4.67	/ft.	$3.62	/ft.
green 350 kcmil cost	$4.82	/ft.	$6.87	/ft.
green 500 kcmil cost	$7.16	/ft.	$6.87	/ft.
green 750 kcmil cost	$8.80	/ft.	$13.57	/ft.
1/0 thru 4/0 - #6 H-Tap	$4.66	ea.	$31.47	ea.
350-750 kcmil - 1/0-4/0 H-Tap	$15.22	ea.	$45.18	ea.
350-750 kcmil - #2 H-Tap	$29.32	ea.	$31.47	ea.
kcmil - kcmil H-Tap	$30.54	ea.	$45.18	ea.
#6 AWG lug	$0.24	ea.	$18.96	ea.
#2 AWG lug	$2.26	ea.	$31.47	ea.
1/0 lug	$2.68	ea.	$31.47	ea.
4/0 lug	$10.72	ea.	$31.47	ea.
350 kcmil lug	$5.80	ea.	$45.18	ea.
500 kcmil lug	$12.44	ea.	$45.18	ea.
750 kcmil lug	$34.22	ea.	$45.18	ea.
H-Tap covers	$3.37	/job		
miscellaneous material cost	$45.78	/job		
Nuts & Bolts for Grounding	$2.28	/job		
Heat Shrink	$4.37	/job		

	A	B	C	D	E	F	G
23	**Assumptions**						
49	Cable Tags	$19.81	/job				
50	CLGB cost	$124.92					
51	E&I 357C default factor	1.5195					
52	#2 used for:	Cageless & Virtual					
53	#2&1/0 avg cage size	100	ft2				
54	4/0 avg cage size	200	ft2				
55	350 avg cage size	300	ft2				
56	500 avg cage size	400	ft2				
57	750 avg cage size	500	ft2 +				
58	cage ground size	6	AWG				
59	# cage grounders	2					
60	avg run for cageless gnd	76					

	A	B	C
1	Version 1.0 Created 6/3/02, 9:53:02 AM		
2	South Dakota		
3	**Virtual Expanded Interconnection (VEIC) - Shelf Investment**		
4			
5			
6			
7			
8	A	Iron Work	$255.00
9	B	Power Panel	$499.00
10	C	Total (A+B)	$754.00
11	D	Utilization	85%
12	E	Investment With Utilization (C/D)	$887.06
13	F	Number of Shelves Per Rack	6
14	G	Material Price Per Shelf (E/F)	$147.84
15	H	Sales Tax	$8.34
16	I	Material Price Per Shelf (E/F)	**$156.18**

	A	B	C	D	E
1					
2	**Qwest 1999 CO-LOCATION LABOR RATES PER HALF HOUR**				
3	**Expense**				
4	Version 1.0 Created 6/3/02, 9:53:02 AM				
5	South Dakota				
6		1999	1999		
7		STRAIGHT TIME	TIME & 1/2 RATE		
8		PER HALF HR.	PER HALF HR.		
9					
10	P42-DSOC MTCE./TRAINING	**$20.27**	**$27.12**	maintenance or training	
11	P70-QUALITY INSPEC./INSTALL.	**$23.11**	**$29.76**	inspector or installation	
12	E20-DETAIL ENGINEERING	**$21.87**	**$28.23**		
13					
14					
15					
16					
17					
18	**P42 CENTRAL OFFICE/TRANSMISSION/SIGNALLING EQUIP. MAINTENANCE**				
19	(Account 6534.11)				
20					
21	Used for work and costs associated with repairing, rearranging,				
22	maintaining, and acceptance testing local and toll Central Office				
23	switching and power equipment, and transmission and signalling				
24	equipment. Shown below are details for:				
25					
26	Central Office Equipment Maintenance functions:				
27	- Repairing, rearranging, and maintaining local switching equipment				
28	requiring circuit analysis				
29	- Performing the inventory of Central Office equipment and network				
30	facilities for the purification of records for mechanized systems				
31	- Testing and accepting Central Office equipment				
32	- Performing processing activities for the local Central Office				
33	maintenance effort				
34	- Typical activities include:				
35	- Logging trunk orders, service orders, cable transfers, line				
36	transfers, and Central Office estimates				
37	- Referring troubles to local Central Office maintenance forces				
38	- Ordering tools and local Central Office maintenance materials				
39	- -Performing other similar local Central Office maintenance				
40	work				

	A	B	C	D	E
41	**P42 CENTRAL OFFICE/TRANSMISSION/SIGNALLING EQUIP. MAINTENANCE (Cont'd)**				
42					
43	Transmission and Signalling Equipment Maintenance functions:				
44	- Repairing, rearranging, and maintaining transmission and				
45	signalling equipment				
46	- Repairing, rearranging, and maintaining circuits, carrier				
47	(repeater) and radio equipment requiring circuit analysis at				
48	Central Office or remote locations				
49	- Repairing, rearranging, and maintaining testboards and local test				
50	desks				
51	- Performing circuit analysis at manual toll, private, and special				
52	service test desks				
53	- Performing the inventory of Central Office equipment and network				
54	facilities for the purification of records for mechanized systems				
55	- Performing surveillance, analysis, repair, maintenance, and				
56	acceptance of Automated Transmission Terminal System components				
57	- Testing circuit equipment in connection with trouble clearance,				
58	routine maintenance, and circuit order activity				
59	- Performing work activities associated with placing trunks and				
60	circuits into service				
61	- Rearranging circuit equipment (e.g., VF patch board) to restore				
62	service				
63	- Repairing, rearranging, maintaining, and accepting Central Office				
64	power equipment requiring circuit analysis				
65	- Performing processing activities for the Central Office				
66	transmission and signalling equipment maintenance effort				
67	- Typical activities include:				
68	- Complying and preparing service measurement reports				
69	- Ordering tools and Central Office maintenance materials				
70	- Processing all types of transmission and signalling equipment				
71	trouble reports				
72	- Logging trunk orders, toll service orders, cable transfers,				
73	line transfers, and Central Office estimates				
74	- Processing and/or filing layout records, technical documents,				
75	and Central Office equipment and location records				
76	- Selecting available equipment for assignment to circuits				
77	after receipt of special service or trunk orders				
78					
79	Exclusions:				
80	- For testing circuits using Outside Plant conductors or radio				
81	channels at testboards or other Central Office equipment				
82	locations, see PWCC P40.				
83	- For testing of local exchange and special service circuits from a				
84	local test desk and performing associated processing activities,				
85	see PWCC P10.				
86	- For testing of trunks and related equipment and facilities from				
87	toll testboards on mechanized test systems (e.g., CAROT) and				
88	performing processing activities, see PWCC P40.				
89					
90					
91	**P70 CENTRAL OFFICE EQUIPMENT INSTALLATION**				

	A	B	C	D	E
92	(Account 6534.11)				
93					
94	Used for work and costs associated with the following Central Office				
95	Equipment Installation functions:				
96	- Installing Central Office equipment including test desks, frames,				
97	and power equipment				
98	- Performing processing activities				
99					
100	Note:				
101	- This PWCC should be assigned only to employees performing Central				
102	Office installations in lieu of vendors.				
103					
104	**E20 NETWORK AND CENTRAL OFFICE PLANNING AND ENGINEERING**				
105	(Account 6535.11)				
106					
107	Used for work and costs associated with tactical planning and design				
108	engineering for the Network and Central Offices. Included are:				
109					
110	Central Office Switching				
111					
112	Tactical planning and design engineering for analog and digital				
113	electronic switching; for local, toll, tandem, and operator systems;				
114	and for equipment space, power, distributing frame,				
115	alarm/surveillance, network switching, technical service,				
116	maintenance, and network plug-in administration.				
117					
118	Transmission				
119					
120	Tactical planning and design engineering for transmission systems				
121	(radio, carrier, and multiplex systems) for interoffice facilities.				
122					
123	Note:				
124	For transmission systems associated with local loop, see PWCC E30.				
125	Trunking				
126	Tactical planning and design engineering for exchange and toll				
127	trunking requirements for message circuits.				

	A	B	C	D	E	F	G
1	Version 1.0 Created 6/3/02, 9:53:02 AM						
2							
3	**Factor Description**	***South Dakota***					
9							
10	**Product Management Expense**	0.019957					
11	**Sales Expense**	0.011877					
12	**Product Advertising Expense**	0.000000					
13	**Business Fees (Other Operating Taxes)**	0.001483					
19	**Network Operations**	0.034832					
20	**Network Support Assets**	0.014703					
21	**General Support Assets**	0.088742					
22	**General Purpose Computers**	0.043342					
23	**Uncollectible - Interconnect**	0.003786					
24	**Accounting and Finance Expense**	0.007346					
25	**Human Resources Expense**	0.008294					
26	**Information Management Expense**	0.070887					
27	**Intangibles**	0.000000					
28							
33	**Executive Expense**	0.011267					
34	**Planning Expense**	0.000525					
35	**External Relations Expense**	0.037846					
36	**Legal Expense**	0.004717					
37	**Other Procurement Expense**	0.001860					
38	**Research and Development Expense**	0.000006					
39	**Other General and Admin Exp**	0.015064					
40							
41							
42							
43							
44	These Factors are calculated by the Factors Module of CM.						
45	See the initial screen or the User Manual for instructions on making changes that effect these factors.						
46	These Factors are used in section B.						

Cell: A10
Comment: Product Management Expense Factor
Product Management Expense, account 6611: Product management includes 1) Rate and Tariff - Development which are the costs of providing new or revised tariff offerings, making studies in support of specific dockets and to identify and analyze costs for regulatory activities and 2) Market Forecast - Management Administration and Analysis which are the costs associated with analyzing all forecasts of current and future market conditions, presenting a detailed customer profile, establishing and tracking revenue objectives, as well as performing basic office services. Product management in a interconnect marketplace will be similar to that of the retail market. In fact it will be like the product management that U S WEST performs today in its Carrier market unit which manages wholesale services such as switched and dedicated access products. In this model, U S WEST used the cost of its carrier marketing product management product group. These expenses are also adjusted with cost savings and inflation factors to bring expenses to study year.

Cell: A11
Comment: Sales Expense Factor
Sales Expense, account 6612: Included in this factor are costs incurred with performing sales contact work, servicing and implementation activities for the purpose of selling products and services to accounts in a particular market or segment. Sales expense in a interconnect marketplace will be similar to that of the retail market. In fact it will be like the Sales expense that U S WEST performs today in its Carrier market unit which manages wholesale services such as switched and dedicated access products. In this model U S WEST used the cost of its carrier marketing sales product group. These expenses are also adjusted with cost savings and inflation factors to bring expenses to study year.

Cell: A12
Comment: Product Advertising Expense Factor
Product advertising expense, account 6613: Includes costs incurred in developing and implementing promotional strategies to stimulate the purchase of products and services. This excludes non product related advertising, such as corporate image, stock and bond issue and employment advertisements, which is included in the appropriate functional accounts. Product advertising is not included in U S West's TELRIC studies. Product advertising is avoided for interconnect services and set to zero.

Cell: A13
Comment: The Business Fees factor estimates the expenses associated with other operating taxes. The factor numerator is based on account 7240 (Operating Other Taxes), specifically 7240.2 through 7240.9. The sub accounts of .2 through .9 represent gross receipts taxes, cost of franchises, capital stock taxes, superfund taxes and other taxes. The business fees denominator consists of the sum of the Directly Attributed denominator less the Business Fees numerator.

Business fees is calculated by multiplying the Total Investment Based Costs +Other Direct Expense Inputs + Product Management + Sales Expense + Product Advertising Expense by the Business fees factor.

Cell: A19
Comment: Network Operations
Network Operations: The numerator for this factor is Account 6532, 6534 and 6535.

Account 6532, includes costs incurred in network administration. This includes such activities as controlling traffic flow, administering traffic measuring and monitoring devices, assigning equipment and load balancing, collecting and summarizing traffic data, administering trunking and assigning interoffice facilities and circuit layout work.

Account 6534, includes costs incurred in the general administration of plant operations. This includes

supervising plant operations, planning, coordinating and monitoring plant operations; and performing staff work such as developing methods and procedures, preparing and conducting training and coordinating safety programs.

Account 6535, includes costs incurred in the general engineering of the telecommunications plant which are not directly chargeable to an undertaking or project. This includes developing input to the fundamental planning process, performing preliminary work or advance planning in connection with potential undertakings, and performing special studies of an engineering nature.

These expenses are adjusted with cost savings and inflation factors to bring expenses to study year.

Cell: A20
Comment: Network Support Assets
Network Support Assets: Included in this factor are accounts 2112-2116.

Account 2112, Motor Vehicles includes the original cost of motor vehicles of those types which are designed and routinely licensed to operate on public streets and highways.

Account 2113, Aircraft includes the original cost of company owned aircraft and any associated equipment and furnishing installed as an integral part of the aircraft.

Account 2114, Special Purpose Vehicles includes the original cost of special purpose vehicles. Special purpose vehicles are self propelled and are therefore independent upon another vehicle's engine for power.

Account 2115, Garage Work Equipment includes the original cost of tools and equipment used to maintain items included in Accounts 2112, 2113, 2114. Items such as Air compressors, car hoists, garage jacks, gasoline pumps etc.

Account 2116, Other Work Equipment includes the original cost of power operated equipment, general purpose tools and other items of work equipment.

The investment in these accounts are converted to expenses to calculate a factor. This is done by multiplying the investment dollars by an Ad Valorem factor, and Capital Costs (Cost of Money, Income Taxes and Depreciation). These investments were also adjusted by a Current Cost to Book Cost ratio and TPI's, to bring expenses to study year.

Cell: A21
Comment: General Support Assets
General Support Assets: Included in this factor are accounts 2111, 2121-23,1220, 2681.1,.9, 2682.1.

Account 2111, Land includes the original cost of all land held in fee and of easements, and similar rights in land having a term of more than one year used for purposes other than the location of outside plant or externally mounted central office equipment.

Account 2121, Buildings includes the original cost of buildings, and the cost of all permanent fixtures, machinery, appurtenances and appliances installed as a part thereof. It shall include costs incident to the construction or purchase of a building and to securing possession and title.

Account 2123, Office Equipment includes the original cost of office equipment in offices, shops and all other quarters. Account 1220, Inventories includes the cost of material and supplies held in stock and inventories of goods held for resale or lease.

Account 2681.1,9, Land and Buildings and Other are: amounts recorded in this account at the inception of a capital lease shall be equal to the original cost, if known, or to the present value not to exceed fair value, at the beginning of the lease term, of minimum lease payments during the lease term, excluding that portion of the payments representing executory costs to be paid by the lessor, together with any profit thereon.

Account 2682.1, Land & Buildings, this account shall include the original cost of lease hold improvements made to telecommunications plant held under a capital or operating lease, which are subject to amortization treatment. The investment in these accounts are converted to expenses to calculate a factor. This is done by multiplying the investment dollars by an Ad Valorem factor, and Capital Costs (Cost of Money, Income Taxes and Depreciation) where applicable. These investments were also adjusted by a Current Cost to Book Cost ratio and TPI's, to bring expenses to study

Cell: A22
Comment: General Purpose Computers
General Purpose Computers: Included in this factor are accounts 2124, 2681.3 & 4 and 2682.2.

Account 2124, General Purpose Computers includes the original cost of computers and peripheral devices which are designed to perform general administrative information processing activities.

Account 2681.3 & 4 Computers and Computer Software Capital leases, includes the amounts recorded in this account at the inception of a capital lease shall be equal to the original cost, if known, or to the present value not to exceed fair value, at the beginning of the lease term, of minimum lease payments during the lease term, excluding that portion of the payments representing executory costs to be paid by the lessor, together with any profit thereon.

Account 2682.2 Computer Leasehold Improvements, this account shall include the original cost of lease hold improvements made to telecommunications plant held under a capital or operating lease, which are subject to amortization treatment. The investment in these accounts are converted to expenses to calculate a factor. This is done by multiplying the investment dollars by an Ad Valorem factor, and Capital Costs (Cost of Money, Income Taxes and Depreciation) where applicable. These investments were also adjusted by a Current Cost to Book Cost ratio and TPI's, to bring expenses to study year where applicable.

Cell: A23
Comment: Uncollectible - Interconnect
Uncollectible - Interconnect: included in this factor is Account 5301.4 & .5 and Account 5302.

Account 5301.4 Interstate - Carrier Access Services (Uncollectibles) include the accruals to the reserve to provide for the write-offs of uncollectible interstate operating revenues arising from CABS services.

Account 5301.5 Intrastate - Carrier Access Services (Uncollectibles) include the accruals to the reserve for the write-offs of uncollectible intrastate operating revenues arising from CABS services.

Account 5302 Uncollectible Revenue - Other this account shall be charged with amounts concurrently creditec to account 1190, Other Accounts Receivable, or to Account 1191, Accounts Receivable Allowance - Other, when such allowance is maintained.

Cell: A24
Comment: Accounting and Finance Expense
Accounting and Finance Expense: Included in this factor is Account 6721, Accounting and Finance Expense.

This includes the costs incurred in providing accounting and financial services. These expenses are also adjusted with cost savings and inflation factors to bring expenses to study year.

Cell: A25
Comment: Human Resources Expense
Human Resources Expense: Included in this factor is Account 6723, Human Resources Expense. This includes the costs incurred in performing personnel administration activities such as Equal Employment Opportunity and Affirmative Action Programs, General Employment Services, Employee data for forecasting, planning and reporting etc. These expenses are also adjusted with cost savings and inflation factors to bring expenses to study year.

Cell: A26
Comment: Information Management Expense
Information Management Expense, account 6724: Included in this factor are costs incurred in planning, developing, testing, implementing and maintaining data bases and application systems for general purpose computers. These expenses are also adjusted with cost savings and inflation factors to bring expenses to study year.

Cell: A27
Comment: Intangibles
Intangibles, Account 2690: Includes the cost of organizing and incorporating the company, the original cost of government franchise, the original cost of patent rights, and other intangible property having a life of more than one year and uses in connection with the company's telecommunications. The investment in this account is converted to expense to calculate the factor. This is done by multiplying the investment dollars by Cost of Money & Income Tax factors. These expenses are also adjusted with inflation factors to bring expenses to study year.

Cell: A33
Comment: Executive Expense
Executive Expense, account 6711: Included in this numerator is executive expense which shall include costs incurred in formulating corporate policy and in providing overall administration and management. These expenses are also adjusted with cost savings and inflation factors to bring expenses to study year.

Cell: A34
Comment: Planning Expense
Planning Expense, account 6712: Included in this factor are costs incurred in developing and evaluating long-term courses of action for the future operations of the Company. This includes performing corporate organization and integrated long-range planning, including management studies, options and contingency plans, and economic strategic analysis. These expenses are also adjusted with cost savings and inflation factors to bring expenses to study year.

Cell: A35
Comment: External Relations Expense
External Relations Expense, account 6722: Included in this factor are costs incurred in maintaining relations with government, regulators, other companies and the general public. These expenses are also adjusted with cost savings and inflation factors to bring expenses to study year.

Cell: A36
Comment: Legal Expense
Legal Expense, account 6725: Included in this factor are costs incurred in providing legal services. This includes conducting and coordinating litigation, providing guidance on regulatory and labor matters, preparing, reviewing and filing patents and contracts and interpreting legislation. These expenses are also adjusted with cost savings and inflation factors to bring expenses to study year.

Cell: A37
Comment: Other Procurement Expense
Other Procurement Expense, account 6726: Included in this factor are costs incurred in procuring material and supplies, including office supplies. These expenses are also adjusted with cost savings and inflation factors to bring expenses to study year.

Cell: A38
Comment: Research and Development Expense
Research and Development Expense, account 6727: Included in this factor are costs incurred in making planned search or critical investigation aimed at discovery of new knowledge. These expenses are also adjusted with cost savings and inflation factors to bring expenses to study year.

Cell: A39
Comment: Other General and Administrative Expenses
Other General and Administrative Expenses, account 6728: Included in this factor are costs incurred in performing general administrative activities not directly charged to the user, and not provided for in other accounts. This includes providing general reference libraries, food services, archives, general security investigation services, operating official private branch exchanges in the conduct of the business and telecommunications and mail services. These expenses are also adjusted with cost savings and inflation factors to bring expenses to study year.

Version 1.0 Created 6/3/02, 9:53:02 AM

CAPCOST FACTORS

Cost of Money	0.1014	**State: South Dakota**
Cost of Debt	0.075	
Debt Ratio	0.4	
Discount Rate	0.1014	

Acct	FRC	Account Name	Depreciation A	Cost of Money B	Income Tax C	Total_CAPCOST D	Ad_Valorem E	Maintenance F
2111	20C	Land	0.000000	0.096506	0.036495	0.133002	0.009546	0.012770331
2212	164C	Motor Vehicles	0.111497	0.049522	0.018727	0.179746	0.009546	
2112	1364C	Aircraft	0.000000	0.000000	0.000000	0.000000	0.009546	
2114	464C	Spec. Purpose Vehicles	0.064286	0.054508	0.020613	0.139407	0.009546	
2115	264C	Garage Work Equipment	0.071429	0.052772	0.019956	0.144156	0.009546	
2116	564C	Other Work Equipment	0.065714	0.054161	0.020482	0.140357	0.009546	
2121	110C	Building	0.025821	0.074869	0.028313	0.129003	0.009546	0.012770331
2122	161C	Furniture	0.075688	0.049290	0.018640	0.143619	0.009546	
2123	261C	Office Equipment	0.107909	0.050794	0.019208	0.177912	0.009546	
2124	361C	General Purpose Comp.	0.164850	0.047620	0.018008	0.230478	0.009546	
2212	377C	Digital Switch	0.108910	0.045445	0.017186	0.171541	0.009546	0.010017758
2220	117C	Operator Systems	0.127964	0.045130	0.017067	0.190161	0.009546	0.022889704
2231	67C	Radio Microwave	0.107035	0.052004	0.019666	0.178705	0.009546	0.005064342
2232.1	157C	Digital Data System	0.101968	0.044769	0.016930	0.163666	0.009546	0.006136476
2232.2	257C	Pair Gain—Digital	0.109717	0.045455	0.017189	0.172361	0.009546	0.0105287
2232.2	257CS	Pair Gain—Digital	0.109717	0.045455	0.017189	0.172361	0.009546	0.0105287
2232.2	257CSP	Pair Gain—Digital	0.109717	0.045455	0.017189	0.172361	0.009546	0.0105287
2232.3	357C	Other Digital Equipment	0.109717	0.045455	0.017189	0.172361	0.009546	0.025489878
2232.3	357CS	Other Digital Equipment	0.109717	0.045455	0.017189	0.172361	0.009546	0.025489878
2232.4	457C	Pair Gain—Analog	0.160932	0.045151	0.017075	0.223158	0.009546	0.035518231
2232.5	57C	Other Analog Equipment	0.160932	0.045151	0.017075	0.223158	0.009546	0.014015023
2351	188C	Public Telephones	0.118750	0.056788	0.021475	0.197013	0.009546	
2362	858C	Chan. Term. Eq.	0.131250	0.052536	0.019867	0.203653	0.009546	0.018844
?411	1C	Poles	0.122572	0.036893	0.013952	0.173417	0.009546	0.00294587
421.11,.21	52C	Aerial Cbl Metallic	0.105201	0.054376	0.020563	0.180141	0.009546	0.111075324
2421.11	42C	Aerial Drop	0.105201	0.054376	0.020563	0.180141	0.009546	0.111075324
2421.12,.22	852C	Aerial Cbl Nonmetallic	0.082636	0.054888	0.020757	0.158281	0.009546	0.005463741
2422.11,.21	5C	UG Cbl Metallic	0.090987	0.056203	0.021254	0.168443	0.009546	0.030615383
2422.12,.22	85C	UG Cbl Nonmetallic	0.070742	0.056557	0.021388	0.148687	0.009546	0.018900794
2423.11,.21	45C	Buried Cbl Metallic	0.060902	0.057059	0.021578	0.139540	0.009546	0.052622508
2423.11	35C	Buried Drop	0.060902	0.057059	0.021578	0.139540	0.009546	0.052622508
2423.12,.22	845C	Buried Cbl Nonmetallic	0.060902	0.057059	0.021578	0.139540	0.009546	0.023074905
2424.11,.21	6C	Submarine Cbl., Exch., Metallic	0.053220	0.058893	0.022271	0.134384	0.009546	0.017836079
2424.12,.22	86C	Submarine Cbl., Exch., Nonmetallic	0.053220	0.058893	0.022271	0.134384	0.009546	0.017836079
2426.1	62C	Intrabuilding Cbl., Exch., Metallic	0.062692	0.058372	0.022074	0.143138	0.009546	0.035118743
2426.2	862C	Intrabuilding Cbl., Exch., Nonmetallic	0.062692	0.058372	0.022074	0.143138	0.009546	0.017855643
2431	3C	Aerial Wire	0.274000	0.091689	0.034674	0.400363	0.009546	0.024483348
2441	4C	Conduit System	0.021443	0.064600	0.024429	0.110473	0.009546	0.007241617
	257CP	Pair Gain—Digital	0.109717	0.045455	0.017189	0.172361	0.009546	0.010529

These are investment factors. They are applied to investments to calculate investment related costs.

Please refer to the user manual before adjusting these factors.

Depreciation, post tax income and income tax expense are calculated by the CAPCOST module of ICM.

To effect changes in these factors, adjust the CAPCOST input parameters.

Ad Valorem and maintenance are calculated by the factors module. Adjust the input parameters to the factors module to cause changes in these Factors.

These factors are applied in the Investment Cost Calculation spreadsheet.

Power Maint Expense Adj	0.003266 Expense Factors module.xls'A1. Factor Development'H43
Sales Tax Factor	0.0564

Cell: D7
omment: Depreciation

Two types of depreciation are involved in the determination of recurring capital costs - book depreciation and tax depreciation. Book depreciation is the repayment of invested capital and is a direct component of capital costs. On the other hand, tax depreciation is not a component of capital cost, but is a schedule of expense deductions used in determining income tax expense. Both depreciation amounts must be separately calculated because most likely, they will differ in timing and amount.

Book depreciation amounts are determined by: (1) total investment, less net salvage, in assets: and (2) estimated life characteristics. The life characteristics are average economic life and survivor shape that are either anticipated or actually experienced at U S West Communications. Several methods are available to calculate book depreciation, however at U S West Communications, the straight-line equal-life group (ELG) method is applied. For service costs studies, ELG allows the depreciation amounts per unit to be "deaveraged" within each vintage of a category.

Tax depreciation is of interest because of its effect on income taxes. Tax depreciation is calculated separately from book depreciation because amounts and timing will differ from book depreciation. This is because, for example, income tax regulations permit using accelerated tax depreciation on most new investments. With accelerated tax depreciation, tax deduction amounts are claimed in greater amounts during the earlier years of an asset's life than during the later years.

To summarize, book depreciation repays capital and is a component cost; whereas, tax depreciation determines the expense deduction used in determining income tax liability.

Cell: E7
Comment: Post Tax Income (Return) (Cost Of Money)

Although invested capital can be repaid in various ways over its life, the capital repayment required will always be the same. However, the cost for the use of this capital varies directly with the time it takes to pay it back. An analogous situation for individuals would be the interest costs on the remaining balance of a home mortgage, which depend on the length of the mortgage. For example, more total interest is paid on a 30-year mortgage than on a mortgage lasting 25 years.

In cost studies, these interest costs are the return owed the investors for the use of their capital, and the company would need to pay this return until capital is fully repaid. The sum of the capital repayment and the associated return is called the capital recovery cost. Of course, in actual practice, investors are partially paid back directly (dividends), and the remaining capital repayment (retained earnings) is reinvested in new plant on behalf of them.

Because the assumed rate is the interest cost of an investment, it is often called the cost of money. And this cost of money is really a composite of the different returns for debt and equity capital. The proportion of debt and equity in the company's capital structure is therefore expressed as the debt ratio, and is used to calculate the composite cost of money as follows:

COMPOSITE COST OF MONEY = (DEBT RATIO X % COST OF DEBT)+(EQUITY RATIO X % COST OF EQUITY)

WHERE; EQUITY RATIO = (1-DEBT RATIO)

The composite cost of money is then used to calculate a schedule of equal payments made over time to repay both capitalized amounts, and a return amount to the investor. Even though each payment is the same, the apportionment between repayment of invested capital and return to the investor changes. The share representing invested capital repaid increases with each payment, and therefore, return to the investor decreases with each payment. Likewise, the principle portion of a home mortgage monthly payment increases each month, and the interest portion declines, even though, the total monthly payment remains the same.

The amount of money representing the return to the investors is called Post Tax Income. The title "post tax income" is somewhat of a misnomer however, since only return on equity is truly post tax income; return on debt is applied as a reduction to revenue thereby reducing taxable income used to compute income tax expense.

Cell: F7
Comment: Income Tax Expense

Along with capital repayment and return, income taxes are incurred on the return required for the equity portion of the capital. Income taxes are involved because federal and state tax regulations provide for taxing remaining income after payment of operations costs and other deductible amounts. These income taxes are then a portion of the revenue required to meet the capital costs of the undertaking.

Income tax expense does not reflect the actual taxes U S West pays; but instead, it represents the taxes that are reported as paid on the income statement. The difference between the income tax expense and the taxes owed (paid) is due to the treatment of accelerated depreciation.

Cell: G7
Comment: Total Capital Costs
In summary, total capital costs consist of three components: capital repayment (depreciation), return (post tax income) and income tax expense. The sum of the first two components, depreciation and post tax income, has been defined as capital recovery. The present worth of the capital costs is therefore the sum of the present worth of the capital recovery costs and the present worth of the tax expenses.

Cell: H7
Comment: The Ad Valorem Tax Factor is used to provide an estimate of the Ad Valorem tax costs that are associated with investments. It was developed for use in estimating the total operating expense associated with central office equipment. public coin equipment, and outside plant equipment. The data sources utilized for this are (numerator) Account 7240.1 Property Taxes and (denominator) Account 2001 Total Telephone Plant in Service.

Cell: I7
Comment: There are 23 Maintenance Factors. Each of these maintenance factors are developed on a state by state basis using expenses and investments relative to the account under study.

Maintenance factors are developed by taking the adjusted levels of 'M' expense dollars and dividing them by adjusted investment associated with a particular account. Power, subscriber line testing and trunk testing factors are added to most accounts to get the final maintenance factor. Maintenance expense is calculated by multiplying the maintenance factor times total investment for an account under study.

Cell: C54
Comment: Power Maintenance Expense Adjustment removes electrical power expenses from maintenance of collocator equipment.

Cell: C55
Comment: Sales Tax Factor
The purpose of the Sales Tax Factor is to provide an estimate of the sales tax costs that are associated with investments. The factor can be used, in conjunction with other factors and data; to develop total installed investment.

SCOPE:
Sales Tax Factors are provided for state specific, and U. S. West application.

SUMMARY:
These factors are provided by U.S. West Corporate Tax Department and represent total tax paid (state and local combined) divided by total taxable revenues from returns.

APPLICATION:
The Sales Tax Factor was developed for use in estimating the total installed investment associated with central office equipment, public coin equipment, and outside plant equipment. The Sales Tax Factor is applied to investments with other loading factors.

CENTRAL OFFICE LAND AND BUILDING
Calculated in Expense Factors Module

	Land Factor	Building Factor
South Dakota	**0.003732**	**0.199833**

This data is used by the C. Investment Cost Calculation spreadsheet to calculate the land and building investments associated with switching equipment and circuit equipment.

Cell: A2
Comment: LAND & BUILDING
Overview

DESCRIPTION
The purpose of this study is to develop factors to estimate land investments and building investments which are capitalized as part of central office switching equipment and circuit equipment. These factors can be used, in conjunction with other factors and data, to develop total installed investments.

SCOPE
The Land Factors for switch and circuit, and the Building Factors for switch and circuit, have been developed on a state specific basis, and as a U S WEST Composite.

SUMMARY OF METHODOLOGY
The study reflects forward looking land and building investments as a percent of the central office switching investment and circuit investment. The four factors that are developed for each state are:

1. Land Factor for Switch
2. Land Factor for Circuit
3. Building Factor for Switch
4. Building Factor for Circuit

The process to calculate land and building factors is as follows:
A. Identify land, building, switching and circuit Investments and other data by state.
B. Calculate total digital central office land and building investments associated with digital central offices.
C. Convert total digital central office land and building investments to current cost of the investment using the CCBC Ratios.
D. Calculate land and building investments for the space that is actually used for digital switching and circuit equipment.
E. Calculate digital switching and circuit land and building factors.

This process is described in detail in sections A through E, below.

A. Identify land, building, switching and circuit Investments and other data by state.

The following Investments data is required to calculate the land and building factors:

Total Land and Building Investments.
Total digital switch and circuit equipment investments.

The following ratios are required to covert total investments to that related to switching and circuit equipment:

Assignable unoccupied central office space ratios.
This ratio was developed by totaling the non-assignable space and the assignable space and dividing the result into the assignable unoccupied space.
Ratio of Digital Central offices space to total building space.
Ratios of Switch to total building and Circuit to total building.

Current cost to book cost ratios (CCBC) are required to convert booked investments to current cost of placing the investments. They are as follows:

CCBC ratios for land and building investments.
CCBC ratios for digital switch and circuit equipment investments.

Sources of the data inputs are shown on the spreadsheet.

B. Calculate total digital central office land and building investments associated with digital central offices.

The study calculates total digital central office land and building investments associated with digital central offices by multiplying the ratio of digital central offices space to total building space times the total land and building investments. The calculations are as follows:

Total Digital Central Office Land Investment = Ratio Of Digital Central Offices Space To Total Building Space X Total Land Investment

Total Digital Central Office Building Investment = Ratio Of Digital Central Offices Space To Total Building Space X Total Building Investment

C. Convert total digital central office land and building investments to current cost of the investment using the CCBC Ratios.

The calculations are as follows:

Current Cost Digital Central Office Land Investment = Total Digital Central Office Land Investment X CCBC (Land)

Current Cost Digital Central Office Building Investment = Total Digital Central Office Building Investment X CCBC (Bldg)

D. Calculate land and building investments for the space that is actually used for digital switching and circuit equipment.

The study calculates digital switching and circuit land and building investments adjusting the total digital central office land and building investments calculated in Step C by the assignable unoccupied central office space ratios and the ratios of switch to total building and circuit to total building. The calculations are as follows:

Building Investment (Digital switch) = Total Digital Central Office Building Investment X (1 - Assignable Unoccupied Central Office Space Ratios) X Ratio Of Switch To Total Building

	A	B	C	D	E
1	Version 1.0 Created 6/3/02, 9:53:02 AM				
2			**Run_Name**		
3	Run Name		1.0 Created 6/3/02, 9:53:02 AM		
4	StudyID		6465		
5			**State**		
6	State		South Dakota		
7	**General Inputs**				
8	**1 Standard Collocation**		Standard		
9	Number of Bays in Standard Configuration		2	Standard_Array	
10	Number of Bays Cable Racking is Spread Over		3		
11	Number of Bays Miscellaneous Items are Spread Over		3		
12	Number of Bays Other Shared Items are Spread Over		3		
13	Number of DS0 Terminations		100		
14	Number of DS1 Terminations		28		
15	Number of DS3 Terminations		1		
16	% of Blocks that are 410 Blocks		0.9		
17	Apply Sales Tax to Contract Labor: 1=Yes, 0=No		1		
18	Shipping Rate		0.13989		
19	**2 Cageless Collocation**		Cageless		
20	Number of Cageless Collocators per office		3	Cageless_Array	
21	% of Jobs that Require Major Aerial Support		0.5		
22	% of Jobs Requiring Any Aerial Support		0.853658537		
23	% of Jobs Requiring Major Cable Racking		0.5		
24	% of Jobs Requiring Both Major Aerial and Major Cable Racking		0.730769231		
25	% of Jobs Requiring some Cable Racking		0.87804878		
26	**3 Caged Collocation**		Caged		
27	Number of Caged Collocators per office		3	Caged_Array	
28	% of Jobs that Require Major Aerial Support		1		
29	% of Jobs Requiring Any Aerial Support		0.853658537		
30	% of Jobs Requiring Major Cable Racking		1		
31	% of Jobs Requiring Both Major Aerial and Major Cable Racking		0.730769231		
32	% of Jobs Requiring some Cable Racking		0.87804878		
33					
34	**Quotation Preparation Fees**		qpf		
35	2.3 Quotation Preparation Fee - Cageless		$ 3,174.25	qpf_array	
36	3.4 Quotation Preparation Fee - Caged		$ 3,451.33		
37	4.3 Quotation Preparation Fee - Virtual		$ 3,174.25		
38					
39	**1.1 Terminations**		Terminations		
40	Number of 410 Blocks		0.9	Blocks_410	
41	Expense per 410 Block		$ 376.00		

	A	B	C	D	E
42	45 Day Labor Expense per 410 Block	$	166.00		
43	90 Day Labor Expense per 410 Block	$	156.84		
44	Number of 89 Blocks		0.1	Blocks_89	
45	Expense per 89 Block	$	85.46		
46	45 Day Labor Expense per 89 Block	$	166.00		
47	90 Day Labor Expense per 89 Block	$	156.84		
48	Number of DS1 Panels		1	DS1_Panels	
49	Expense per DS1 Panel	$	317.25		
50	45 Day Labor Expense per DS1 Panel	$	112.93		
51	90 Day Labor Expense per DS1 Panel	$	106.69		
52	Number of DS3 Connectors		2	DS3_Connectors	
53	Expense per DS3 Connector	$	8.50		
54	45 Day Labor Expense per DS3 Connector	$	4.69		
55	90 Day Labor Expense per DS3 Connector	$	4.44		
56	Number of DS0 Cable Feet		156.05	DS0_Cable	
57	Expense per DS0 Cable Foot	$	1.45		
58	Number of DS0 Cable Terminations		100.00		
59	45 Day Labor Expense per DS0 Cable foot	$	1.01		
60	90 Day Labor Expense per DS0 Cable foot	$	0.96		
61	Number of DS1 Cable Feet		115.47	DS1_Cable	
62	Expense per DS1 Cable Foot	$	1.13		
63	Number of DS1 Cable Terminations		28.00		
64	45 Day Labor Expense per DS1 Cable foot	$	1.20		
65	90 Day Labor Expense per DS1 Cable foot	$	1.13		
66	Number of DS3 Cable Feet		94.77	DS3_Cable	
67	Expense per DS3 Cable Foot	$	0.89		
68	Number of DS3 Cable Terminations		1.00		
69	45 Day Labor Expense per DS3 Cable foot	$	0.54		
70	90 Day Labor Expense per DS3 Cable foot	$	0.51		
71					
72	**1.2 Entrance Enclosure**				
73	**Entrance Enclosure-General**		Enclosure		
74	Underground Fiber Cable Per Ft		$1.04	Enclosure_Array	
75	Utility Hole		$6,487.54		
76	Cut & Replace Road Covering - Utility Hole		$1,977.60		
77	Cut & Replace Concrete Per Trench Ft. - Conduit		$12.36		
78	Backfill Utility Hole		$816.60		
79	Backfill Conduit Trench Per Trench Ft.		$5.21		
80	Conduit Per Ft.		$21.63		
81	Pumping Utility Hole		$499.96		
82	Pulling Fiber into Conduit Per Ft.		$1.36		
83	Innerduct Per Ft.		$2.66		
84	Fiber Cable Per Ft		$1.16		
85	Cable Rack Per Ft		$181.45		
86	Fiber Cable Splicing - Per Setup		$366.99		
87	Fiber Cable Splicing - Per Fiber Spliced		$16.32		
88	Fiber Distribution Panel		$1,394.72		
89	Single Fiber Jumper		$125.00		
90	Attenuator Per Fiber		$0.00		
91	Core Drill		$112.00		
92	Placing Fiber Cable on Cable Racking Per Ft		$2.39		
93	Distance from Manhole '0' to Cable Vault		108		
94	Distance between Manhole 1 and Manhole '0'		302		
95	Weighting of use of POI		10%		
96	Weighting of use of Existing Manhole = (1-%POI)		90%		
97	**Standard Entrance Enclosure**		Shared_Entrance		
98	Distance from POI to USW Manhole '0' (feet)		50	ndard_Entrance_Array	
99	Fibers required per Collocator		18		
100	Collocators per Utility Hole/Conduit/CO		3		
101	Core Drills per manhole		2		
102	Number of Fiber Splice Setup		2		
103	Number of fibers spliced per CLEC		18		
104	Distance for New Cable Racking		20		

	A	C	D	E
105	Distance Shared Cable Racking	130		
106	**Cross Connect Entrance Enclosure**	Xconnect		
107	Distance from POI to USW Manhole '0' (feet)	50	Xconnect_Array	
108	Fibers required per Collocator	18		
109	Collocators per Utility Hole/Conduit/CO	3		
110	Core Drills per central office	2		
111	Number of Fiber Splice Setup	2		
112	Number of fibers spliced per CLEC	18		
113	Number of Fiber Distribution Panel	2		
114	Distance of New Cable Racking	20		
115	Distance of Shared Cable Racking	130		
116	**Express Entrance Enclosure**	Express		
117	Distance from POI to Manhole '0' (feet)	50	Express_Array	
118	Core Drills per central office	2		
119	Collocators per Utility Hole/Conduit/CO	3		
120	Distance from POI to Cable Vault (feet)	150		
121	Distance for New Cable Racking	20		
122	Distance for Existing Cable Racking	130		
123				
124	**2 Overall Aerial Support - Cageless**	Aerial_Major	Aerial_Minor	
125	Aux Frame Channel - Number of 10 foot channels	60	7	Aux
126	Aux Frame Channel - Number of 20 foot channels	7	1	
127	Aux Frame Channel - Expense per 10 foot channels	$18.00	$12.94	
128	Aux Frame Channel - Expense per 20 foot channel	$50.10	$38.05	
129	Aux Frame Channel - 45 Day Labor Expense per foot	$ 12.60	$ 12.60	
130	Aux Frame Channel - 90 Day Labor Expense per foot	$ 11.91	$ 11.91	
131	U Channel - Number of U Channels	1	0	U_Channel
132	U Channel - Expense per U Channel	$123.25	$0.00	
133	U Channel - 45 Day Labor Expense per foot	$ 20.34	$ 20.34	
134	U Channel - 90 Day Labor Expense per foot	$ 19.22	$ 19.22	
135	Number of Aux Frame Fittings	28.78947368	3.5625	Aerial_Other
136	Expense per Aux Frame Fitting	$20.27	$19.23	
137	Number of Aux Frames Support	68.47368421	18.4375	
138	Expense per Aux Frame Support	$6.90	$5.06	
139	Number of Aux Frame Nuts and Bolts	140.4736842	8.125	
140	Expense of Aux Frame Nuts and Bolts	$0.39	$0.29	
141	Number of Cable Racks Support	0.210526316	0	
142	Expense per Cable Rack Support	$24.19	$0.00	
143	Amount of Insulation	5.473684211	0.875	
144	Expense per Insulation	$2.63	$2.42	
145	Number of Miscellaneous Items	17.47368421	0.125	
146	Expense per miscellaneous item	$11.24	$6.58	
147	Number of Nuts and Bolts - cable racking	0.421052632	0.25	
148	Expense of Nuts and Bolts - cable racking	$0.52	$0.52	
149	Number of General Support items	1.578947368	0	
150	Expense of General Support items	$1.95	$0.00	
151	Number of U-Channel - Other Items	0.578947368	7.5	
152	Expense of U-Channel - Other Items	$18.46	$2.18	
153	Number of U-Channel Fittings	0	0.25	
154	Expense of U-Channel Fitting	$0.00	$2.78	
155				
156	**2 Cable Racking - Cageless**	Rack_Major	Rack_Minor	
157	Number of Channels	9.5	1.3	Cable_Tracking
158	Expense per Channel	$ 74.52	$ 69.17	

	A	B	C	D	E
159	45 Day Labor Expense per Channel	$	22.57	$ 22.57	
160	90 Day Labor Expense per Channel	$	21.32	$ 21.32	
161	Number of Ladders		1.6	0.1	
162	Expense per Ladder	$	29.24	$ 23.76	
163	45 Day Labor Expense per Ladder	$	22.57	$ 22.57	
164	90 Day Labor Expense per Ladder	$	21.32	$ 21.32	
165	Number of Horns		29.3	2.4	
166	Expense per Horn	$	13.93	$ 15.70	
167	45 Day Labor Expense per Horn	$	6.64	$ 6.64	
168	90 Day Labor Expense per Horn	$	6.27	$ 6.27	
169	Amount of Pan		7.2	1.4	
170	Expense for Pan	$	26.31	$ 28.77	
171	45 Day Labor Expense per Pan	$	12.98	$ 12.98	
172	90 Day Labor Expense per Pan	$	12.27	$ 12.27	
173	Number of Systems Ladders		10.6	1	
174	Expense per Systems Ladder	$	4.91	$ 2.65	
175	Number of Brackets		17.7	10.8	
176	Expense per Bracket	$	12.05	$ 13.60	
177	Number of Fittings		51.1	35	
178	Expense per Fitting	$	8.04	$ 6.84	
179	Number of Insulators		3.7	1.6	
180	Expense per Insulator	$	1.04	$ 0.64	
181	Number of Cable Racking Kits		9.1	3.8	
182	Expense per Cable Racking Kit	$	60.01	$ 48.92	
183	Number of Miscellaneous Items		142.7	40	
184	Expense per Miscellaneous Item	$	0.10	$ 0.02	
185	Number of Support Items		33.4	8.2	
186	Expense per Support Item	$	7.55	$ 6.14	
187	Number of Nuts and Bolts		16.8	20.1	
188	Expense per set of Nuts and Bolts	$	0.47	$ 0.49	
189					
190	**2 Bay Support - Cageless**		Bay		
191	Number of Bays		7.5	Bay_Array	
192	Expense per Bay	$	279.71		
193	45 Day Labor Expense per 1st Bay	$	438.08		
194	45 Day Labor Expense add'l Bay	$	320.48		
195	90 Day Labor Expense per Bay	$	413.90		
196	90 Day Labor Expense add'l Bay	$	302.79		
197	Number of AC Outlets		2.25		
198	Expense per AC Outlet	$	94.05		
199	45 Day Labor Expense per Outlet	$	88.12		
200	90 Day Labor Expense per Outlet	$	83.26		
201	Number of End Guards		3.5		
202	Expense per End Guard	$	363.51		
203	45 Day Labor Expense per End Guard	$	43.89		
204	90 Day Labor Expense per End Guard	$	41.46		
205	Number of Anchor Bolts		16.5		
206	Expense per Anchor Bolt Set	$	27.15		
207	Number of Filler Panels		2.875		
208	Expense per Filler Panel	$	198.08		
209	Number of Guard Rails		5		
210	Expense per Guard Rail	$	66.56		
211	Number of Mountings		28.25		
212	Expense per Mounting	$	82.91		
213	Number of Miscellaneous Items		12.75		
214	Expense per Miscellaneous Item	$	0.40		
215					
216	**2 Lighting**		Light_Cageless		
217	Number of Fixtures		2.56	Lighting	
218	Expense per Fixture	$	111.70		

	A	B	C	D	E
219	45 Day Labor Expense per Fixture	$	214.19		
220	90 Day Labor Expense per Fixture	$	202.37		
221	Number of Lights		1.71		
222	Expense per Light	$	103.96		
223	45 Day Labor Expense per Light	$	214.19		
224	90 Day Labor Expense per Light	$	202.37		
225	Number of Cables		13.66		
226	Expense per Cable	$	0.37		
227	45 Day Labor Expense per 4 Cables	$	2.50		
228	90 Day Labor Expense per 4 Cables	$	2.36		
229	Number of Conduit Supports		0.05		
230	Expense per Conduit Support	$	248.19		
231	45 Day Labor Expense per foot Conduit Support	$	18.61		
232	90 Day Labor Expense per foot Conduit Support	$	17.58		
233	Number of Wires		17.07		
234	Expense per Wire	$	0.25		
235	45 Day Labor Expense per Wire	$	2.39		
236	90 Day Labor Expense per Wire	$	2.26		
237	Number of Conduit Supports - Other		0.29		
238	Expense per Conduit Support - Other	$	0.11		
239	Number of Outlet Raceways		2.27		
240	Expense per Outlet Raceway	$	44.11		
241	Number of Supports		8.15		
242	Expense per Support	$	8.42		
243	Number of Switches		1.20		
244	Expense per Switch	$	97.81		
245	Number of Fittings		8.73		
246	Expense per Fitting	$	4.74		
247	Number of Fitting Supports		0.73		
248	Expense per Fitting Supports	$	13.67		
249	Number of Miscellaneous Items		5.22		
250	Expense per Miscellaneous Item	$	0.27		
251					
252	**2.1 & 3.1 Cable Hole**	Cable_Hole			
253	Number of Fire Stop		0.83	Cable_Hole_Array	
254	Expense per Fire Stop	$	1.36		
255	45 Day Labor Expense per Fire Stop	$	265.37		
256	90 Day Labor Expense per Fire Stop	$	250.72		
257	Number of Bags		0.24		
258	Expense per Bag	$	29.34		
259	Number of Labels		1.02		
260	Expense per Label	$	0.22		
261	Amount of Putty		1.73		
262	Expense of Putty	$	27.02		
263	Number of Sheets		0.37		
264	Expense per Sheet	$	69.55		
265	Amount of Tape		0.07		
266	Expense of Tape	$	188.83		
267	Number of miscellaneous items		0.44		
268	Expense per miscellaneous item	$	2.64		
269					
270	**2.1 Cageless Miscellaneous Inputs**	Misc_Inputs			
271	Number of Ducts		0.20	Misc_Inputs_Array	
272	Expense per Duct	$	3.06		
273	45 Day Labor Expense per Duct	$	18.13		
274	90 Day Labor Expense per Duct	$	17.13		
275	Number of Misc Materials		0.95		
276	Expense for Misc Materials		803.1787179		
277	Number of Bolt Kits		0.02		
278	Expense per Bolt Kit	$	7.53		
279	Number of Eqpt Nuts and Bolts		0.17		
280	Expense for Eqpt Nuts and Bolts	$	5.71		
281	Number of General Nuts and Bolts		17.12		

	A	B	C	D	E
282	Expense for General Nuts and Bolts	$	0.40		
283	Amount of Paint		1.29		
284	Expense for Paint	$	8.66		
285	Number of Tags		2.02		
286	Expense per Tag	$	2.86		
287	Amount of Tape		0.34		
288	Expense for Tape	$	9.92		
289	Number of Miscellaneous Items		5.49		
290	Expense per Miscellaneous Item	$	104.78		
291					
292	**2 Grounding - Cageless**	Grounding_Cageless			
293	1/0 Cable Footage		0.975609756	Grounding_Cageless_Array	
294	Expense per foot of 1/0 Cable	$	3.12		
295	45 Day Labor Expense per foot of 1/0 Cable	$	1.92		
296	90 Day Labor Expense per foot of 1/0 Cable	$	1.81		
297	#2 Cable Footage		34.87804878		
298	Expense per foot of #2 Cable	$	1.56		
299	45 Day Labor Expense per foot of #2 Cable	$	0.62		
300	90 Day Labor Expense per foot of #2 Cable	$	0.59		
301	4/0 Cable Footage		33.65853659		
302	Expense per foot of 4/0 Cable	$	2.11		
303	45 Day Labor Expense per foot of 4/0 Cable	$	3.64		
304	90 Day Labor Expense per foot of 4/0 Cable	$	3.44		
305	#6 Cable Footage		0.609756098		
306	Expense per foot of #6 Cable	$	0.67		
307	45 Day Labor Expense per foot of #6 Cable	$	0.62		
308	90 Day Labor Expense per foot of #6 Cable	$	0.59		
309	750 Cable Footage		10.85365854		
310	Expense per foot of 750 Cable	$	8.80		
311	45 Day Labor Expense per foot of 750 Cable	$	14.36		
312	90 Day Labor Expense per foot of 750 Cable	$	13.57		
313	Number of Ground Bars		0.05		
314	Expense per Ground Bar	$	124.92		
315	45 Day Labor Expense per Ground Bar	$	234.25		
316	90 Day Labor Expense per Ground Bar	$	221.32		
317	Amount of Alternative Racking		1.073170732		
318	Expense of Alternative Racking	$	6.87		
319					
320	**3 Cable Racking - Caged**	Rack_Major_Caged		Rack_Minor_Caged	
321	Number of Channels		8	2.5	Rack_Caged_Array
322	Expense per Channel	$	74.52	$ 69.17	
323	45 Day Labor Expense per Channel	$	22.57	$ 22.57	
324	90 Day Labor Expense per Channel	$	21.32	$ 21.32	
325	Number of Horns		24.6	4.6	
326	Expense per Horn	$	13.93	$ 15.70	
327	45 Day Labor Expense per Horn	$	6.64	$ 6.64	
328	90 Day Labor Expense per Horn	$	6.27	$ 6.27	
329	Amount of Pan		6.0	2.7	
330	Expense for Pan	$	26.31	$ 28.77	
331	45 Day Labor Expense per Pan	$	12.98	$ 12.98	
332	90 Day Labor Expense per Pan	$	12.27	$ 12.27	
333	Number of Systems Ladders		8.9	1.2	
334	Expense per Systems Ladder	$	4.91	$ 2.65	
335	Number of Brackets		14.9	20.8	
336	Expense per Bracket	$	12.05	$ 13.60	
337	Number of Fittings		43.0	67.3	
338	Expense per Fitting	$	8.04	$ 6.84	
339	Number of Insulators		3.1	3.1	
340	Expense per Insulator	$	1.04	$ 0.64	
341	Number of Cable Racking Kits		7.7	7.3	
342	Expense per Cable Racking Kit	$	60.01	$ 48.92	
343	Number of Miscellaneous Items		120.2	76.9	
344	Expense per Miscellaneous Item	$	0.10	$ 0.02	

	A	B	C	D	E
345	Number of Support Items		28.1	15.8	
346	Expense per Support Item	$	7.55	$ 6.14	
347	Number of Nuts and Bolts		14.2	38.7	
348	Expense per set of Nuts and Bolts	$	0.47	$ 0.49	
349					
350	**3 Overall Aerial Support - Caged**	Aerial_Caged_Major		Aerial_Caged_Minor	
351	Aux Frame Channel - Number of 10 foot channels		32	5	Aerial_Caged_Array
352	Aux Frame Channel - Number of 20 foot channels		16	3	
353	Aux Frame Channel - Expense per 10 foot channels	$	18.00	$ 12.94	
354	Aux Frame Channel - Expense per 20 foot channel	$	50.10	$ 38.05	
355	Aux Frame Channel - 45 Day Labor Expense per foot	$	12.60	$ 12.60	
356	Aux Frame Channel - 90 Day Labor Expense per foot	$	11.91	$ 11.91	
357	U Channel - Number of U Channels		1	0	
358	U Channel - Expense per U Channel		$123.25	$0.00	
359	U Channel - 45 Day Labor Expense per foot	$	20.34	$ 20.34	
360	U Channel - 90 Day Labor Expense per foot	$	19.22	$ 19.22	
361	Number of Aux Frame Fittings		20.64	3.59	
362	Expense per Aux Frame Fitting		$20.27	$19.23	
363	Number of Aux Frames Support		49.09	18.59	
364	Expense per Aux Frame Support	$	6.90	$ 5.06	
365	Number of Aux Frame Nuts and Bolts		100.72	8.19	
366	Expense of Aux Frame Nuts and Bolts	$	0.39	$ 0.29	
367	Number of Cable Racks Support		0.15	0.00	
368	Expense per Cable Rack Support	$	24.19	$ -	
369	Amount of Insulation		3.92	0.88	
370	Expense per Insulation	$	2.63	$ 2.42	
371	Number of Miscellaneous Items		12.53	0.13	
372	Expense per miscellaneous item	$	11.24	$ 6.58	
373	Number of Nuts and Bolts - cable racking		0.30	0.25	
374	Expense of Nuts and Bolts - cable racking	$	0.52	$ 0.52	
375	Number of General Support items		1.13	0.00	
376	Expense of General Support items		$1.95	$0.00	
377	Number of U-Channel - Other Items		1.06	7.56	
378	Expense of U-Channel - Other Items	$	18.46	$ 2.18	
379	Number of U-Channel Fittings		0.00	0.25	
380	Expense of U-Channel Fitting		$0.00	$2.78	
381					
382	**3.1 Caged Expense Inputs**	Caged_Inputs			
383	Fence - 100 sf		$3,970.00	Caged_Inputs_Array	
384	Fence - 200 sf		$4,950.00		
385	Fence - 300 sf		$5,560.00		
386	Fence - 400 sf		$6,140.00		
387	HVAC - 100 sf		$713.00		
388	HVAC - 200 sf		$854.00		
389	HVAC - 300 sf		$1,071.00		
390	HVAC - 400 sf		$1,596.00		
391	Electrical Distrtribution - 100 sf		$4,341.00		
392	Electrical Distrtribution - 200 sf		$4,379.00		
393	Electrical Distrtribution - 300 sf		$4,398.00		
394	Electrical Distrtribution - 400 sf		$4,416.00		
395	Lighting - 100 sf		$679.00		
396	Lighting - 200 sf		$932.00		
397	Lighting - 300 sf		$1,184.00		
398	Lighting - 400 sf		$1,437.00		

CONTINUATION

[6]

Study ID #6466

Qwest Default Values 5/30/02 9:43:47 AM

South Dakota

Qwest

Integrated Cost Model Interconnection TELRIC Results

2002 Recurring Cost Study



Table of Contents

Subject	Page
Summary - Interconnection TELRIC Summary of Recurring Costs	
Section A - Unbundled Loop	
Development of Total Product Costs	1
Investment Cost Calculation	5
Zone and Office Specific Loop Costs	9
Defaults and Overrides	18
Investment Development	20
Investment Module Outputs	24
Section B - Extension Technology	
Development of Total Product Costs	1
Investment Cost Calculation	2
Investment Development	3
Investment Module Outputs	7
Section C - Line and Trunk Ports	
Development of Total Product Costs	1
Investment Cost Calculation	2
Investment and Expense Development	4
Investment Module Outputs	14
Defaults and Overrides	15
Section D - Local and Usage	
Development of Total Product Costs	1
Investment Cost Calculation	2
Defaults and Overrides	5
Investment and Expense Development	7
Investment Module Outputs	10
Hold Times	13
Section E - Entrance Facilities and Direct Trunked Transport	
Development of Total Product Costs	1
Investment Cost Calculation	3
Defaults and Overrides	8
Investment Module Outputs	10
Section F - Intentionally Left Blank	

Section G - 8XX Database Services

Development of Total Product Costs	1
Investment Cost Calculation	2
Investment and Expense Inputs	3

Section H - Line Information Database

Development of Total Product Costs	1
Investment Cost Calculation	2
Investment and Expense Inputs	3

Section I - Signaling

Development of Total Product Costs	1
Investment Cost Calculation	2
Investment and Expense Inputs	4

Section J - Shared Transport

Development of Total Product Costs	1
Investment Cost Calculation	2
Defaults and Overrides	3
Investment Development	4
Investment Module Outputs	7

Section K - UDIT/EEL

Development of Total Product Costs	1
Investment Cost Calculation	8
Defaults and Overrides	17
Investment Module Outputs	18

Appendix - Factors, Investment Loadings and ICM Inputs

Expense Factors	1
Investment Based Factors	3
Billing	10
Land & Building Factors	12
Investment Loadings	13
ICM Run Data	15

Summary of Results

Qwest Default Values 5/30/02 9:43:47 AM — **ICM Version** 2.3

Recurring Costs
South Dakota

Cost Element	Investment	TELRIC	Common	TELRIC + Common
Section A - Unbundled Loop				
2 Wire				
Unbundled Loop (2 Wire) Statewide Average	1349.93	28.32	2.02	**30.34**
Unbundled Loop (2 Wire) Zone 1	707.04	18.16	2.02	**20.18**
Unbundled Loop (2 Wire) Zone 2	1297.83	27.70	2.02	**29.72**
Unbundled Loop (2 Wire) Zone 3	1848.70	36.13	2.02	**38.15**
4 Wire				
Unbundled Loop (4 Wire) Statewide Average	2699.87	56.63	4.04	**60.66**
Unbundled Loop (4 Wire) Zone 1	1414.07	36.29	4.04	**40.33**
Unbundled Loop (4 Wire) Zone 2	2595.66	55.39	4.04	**59.42**
Unbundled Loop (4 Wire) Zone 3	3697.41	72.24	4.04	**76.27**
Unbundled Loop Grooming				
Unbundled Loop Grooming (2 Wire)	72.60	1.50	0.11	**1.60**
Unbundled Loop Grooming (4 Wire)	172.00	3.52	0.25	**3.77**
Network Interface Device (NID)				
Network Interface Device (2 Wire) Statewide Average	42.37	0.98	0.07	**1.05**
Section B - Extension Technology				
2-Wire Extension Technology	217.63	4.44	0.32	**4.76**
2-Wire Extension Technology - Unbundled Loop Grooming	98.53	2.16	0.15	**2.31**
Section C - Line and Trunk Ports				
DS0 Analog Line Port	72.226	1.4803	0.1055	**1.5859**
Each Addditional DS0 Analog Line Port	72.226	1.4803	0.1055	**1.5859**
DS0 Trunk Port	1009.616	20.5062	1.4618	**21.968**
DS1 Trunk Port	4081.228	82.4468	5.8773	**88.324**
ISDN BRI Port	360.431	9.9778	0.7113	**10.6891**
ISDN PRI Port	9069.126	183.1832	13.0583	**196.24**
DID/PBX Trunk Port per DS0	188.504	3.8290	0.2730	**4.1019**
Section D - Local Usage				
Local Switching UNE per Minute of Use	0.0146776	0.0039587	0.0002822	**0.004241**
Tandem Switching UNE per Minute of Use	0.0086717	0.0024821	0.0001769	**0.002659**
Local Switching LIS per Minute of Use	0.0085970	0.0025425	0.0001812	**0.002724**
Tandem Switching LIS per Minute of Use	0.0057219	0.0013867	0.0000989	**0.001486**
Tandem Switched Local Transport				
Fixed per Minute of Use 0 to 8 Miles	0.0046303	0.0012045	0.0000859	**0.001290**
Fixed per Minute of Use 8 to 25 Miles	0.0046303	0.0012045	0.0000859	**0.001290**
Fixed per Minute of Use 25 to 50 Miles	0.0046303	0.0012045	0.0000859	**0.001290**
Fixed per Minute of Use Over 50 Miles	0.0041331	0.0010752	0.0000766	**0.001152**
Distance Sensitive per Minute of Use per Mile from 0 to 8 miles	0.0001160	0.0000262	0.0000019	**0.0000280**
Distance Sensitive per Minute of Use per Mile from 8 to 25 miles	0.0001160	0.0000262	0.0000019	**0.0000280**
Distance Sensitive per Minute of Use per Mile from 25 to 50 miles	0.0001160	0.0000262	0.0000019	**0.0000280**
Distance Sensitive per Minute of Use per Mile over 50 miles	0.0000724	0.0000168	0.0000012	**0.0000180**
Section E - Entrance Facilities and Direct Trunked Transport				
Entrance Facilities				

Summary of Results

Qwest Default Values 5/30/02 9:43:47 AM **ICM Version 2.3**

Recurring Costs
South Dakota

Cost Element	Investment	TELRIC	Common	TELRIC + Common
DS1 Entrance Facility	5859.48	121.23	8.64	**129.87**
DS3 Entrance Facility	23800.79	483.53	34.47	**518.00**
Multiplexing				
Multiplexing DS3 to DS1	15554.00	317.38	22.62	**340.00**
Multiplexing DS1 to DS0	13662.97	278.79	19.87	**298.66**
DS1 Direct Trunked Transport				
Over 0 to 8 Miles, Fixed	3333.85	72.59	5.17	**77.76**
Over 0 to 8 Miles, Per Air Mile	157.51	2.94	0.21	**3.15**
Over 8 to 25 Miles, Fixed	3333.85	72.59	5.17	**77.76**
Over 8 to 25 Miles, Per Air Mile	157.51	2.94	0.21	**3.15**
Over 25 to 50 Miles, Fixed	3333.85	72.59	5.17	**77.76**
Over 25 to 50 Miles, Per Air Mile	157.51	2.94	0.21	**3.15**
Over 50 Miles, Fixed	2968.98	64.64	4.61	**69.25**
Over 50 Miles, Per Air Mile	102.85	2.00	0.14	**2.14**
DS3 Direct Trunked Transport				
Over 0 to 8 Miles, Fixed	18992.72	413.51	29.48	**442.99**
Over 0 to 8 Miles, Per Air Mile	1581.99	29.13	2.08	**31.21**
Over 8 to 25 Miles, Fixed	18992.72	413.51	29.48	**442.99**
Over 8 to 25 Miles, Per Air Mile	1581.99	29.13	2.08	**31.21**
Over 25 to 50 Miles, Fixed	18992.72	413.51	29.48	**442.99**
Over 25 to 50 Miles, Per Air Mile	1581.99	29.13	2.08	**31.21**
Over 50 Miles, Fixed	16242.92	353.64	25.21	**378.85**
Over 50 Miles, Per Air Mile	886.87	17.29	1.23	**18.52**
Section F - Intentionally Left Blank				
Section G - 8XX Database Services				
Basic Query	0.00178522	0.01941843	0.00138425	**0.020803**
Call Handling and Destination	0.00000706	0.00000171	0.00000012	**0.00000183**
POTS Translation	0.00000235	0.00000057	0.00000004	**0.00000061**
Section H - Line Information Database				
LIDB per Query	0.0019475	0.0008573	0.0000611	**0.0009184**
Section I - Signaling				
ISUP Signal Formulation	0.002589	0.0006275	0.0000447	**0.0006722**
ISUP Signal Transport	0.000810	0.0002018	0.0000144	**0.0002161**
TCAP Signal Transport	0.000091	0.0000223	0.0000016	**0.0000239**
ISUP Signal Switching	0.002966	0.0010076	0.0000718	**0.0010794**
TCAP Signal Switching	0.002245	0.0008328	0.0000594	**0.0008921**
STP Port	12738.33	257.27	18.34	**275.60**
Section J - Shared Transport				
Shared Transport per MOU	0.007064	0.002121	0.000151	**0.002272**
Section K - UDIT/EEL				
Multiplexing				
Multiplexing DS3 to DS1	15554.00	317.38	22.62	**340.00**
Multiplexing DS1 to DS0	13662.97	278.79	19.87	**298.66**
DS0 UDIT/EEL				
Over 0 to 8 Miles, Fixed	1468.20	31.97	2.28	**34.24**

Summary of Results

Qwest Default Values 5/30/02 9:43:47 AM **ICM Version 2.3**

Recurring Costs
South Dakota

Cost Element	Investment	TELRIC	Common	TELRIC + Common
Over 0 to 8 Miles, Per Air Mile	14.94	0.28	0.02	**0.30**
Over 8 to 25 Miles, Fixed	1468.20	31.97	2.28	**34.24**
Over 8 to 25 Miles, Per Air Mile	14.94	0.28	0.02	**0.30**
Over 25 to 50 Miles, Fixed	1468.20	31.97	2.28	**34.24**
Over 25 to 50 Miles, Per Air Mile	14.94	0.28	0.02	**0.30**
Over 50 Miles, Fixed	1436.31	31.27	2.23	**33.50**
Over 50 Miles, Per Air Mile	10.76	0.21	0.01	**0.22**
DS1 UDIT/EEL				
Over 0 to 8 Miles, Fixed	3333.85	72.59	5.17	**77.76**
Over 0 to 8 Miles, Per Air Mile	157.51	2.94	0.21	**3.15**
Over 8 to 25 Miles, Fixed	3333.85	72.59	5.17	**77.76**
Over 8 to 25 Miles, Per Air Mile	157.51	2.94	0.21	**3.15**
Over 25 to 50 Miles, Fixed	3333.85	72.59	5.17	**77.76**
Over 25 to 50 Miles, Per Air Mile	157.51	2.94	0.21	**3.15**
Over 50 Miles, Fixed	2968.98	64.64	4.61	**69.25**
Over 50 Miles, Per Air Mile	102.85	2.00	0.14	**2.14**
DS3 UDIT/EEL				
Over 0 to 8 Miles, Fixed	18992.72	413.51	29.48	**442.99**
Over 0 to 8 Miles, Per Air Mile	1581.99	29.13	2.08	**31.21**
Over 8 to 25 Miles, Fixed	18992.72	413.51	29.48	**442.99**
Over 8 to 25 Miles, Per Air Mile	1581.99	29.13	2.08	**31.21**
Over 25 to 50 Miles, Fixed	18992.72	413.51	29.48	**442.99**
Over 25 to 50 Miles, Per Air Mile	1581.99	29.13	2.08	**31.21**
Over 50 Miles, Fixed	16242.92	353.64	25.21	**378.85**
Over 50 Miles, Per Air Mile	886.87	17.29	1.23	**18.52**
OC3 UDIT/EEL				
Over 0 to 8 Miles, Fixed	32703.21	712.02	50.76	**762.78**
Over 0 to 8 Miles, Per Air Mile	2425.94	44.67	3.18	**47.86**
Over 8 to 25 Miles, Fixed	32703.21	712.02	50.76	**762.78**
Over 8 to 25 Miles, Per Air Mile	2425.94	44.67	3.18	**47.86**
Over 25 to 50 Miles, Fixed	32703.21	712.02	50.76	**762.78**
Over 25 to 50 Miles, Per Air Mile	2425.94	44.67	3.18	**47.86**
Over 50 Miles, Fixed	32703.21	712.02	50.76	**762.78**
Over 50 Miles, Per Air Mile	3371.74	63.89	4.55	**68.44**
OC12 UDIT/EEL				
Over 0 to 8 Miles, Fixed	92776.29	2019.94	143.99	**2163.94**
Over 0 to 8 Miles, Per Air Mile	4815.98	88.68	6.32	**95.01**
Over 8 to 25 Miles, Fixed	92776.29	2019.94	143.99	**2163.94**
Over 8 to 25 Miles, Per Air Mile	4815.98	88.68	6.32	**95.01**
Over 25 to 50 Miles, Fixed	92776.29	2019.94	143.99	**2163.94**
Over 25 to 50 Miles, Per Air Mile	4815.98	88.68	6.32	**95.01**
Over 50 Miles, Fixed	92776.29	2019.94	143.99	**2163.94**
Over 50 Miles, Per Air Mile	6955.05	132.52	9.45	**141.97**
OC48 UDIT/EEL				
Over 0 to 8 Miles, Fixed	189444.34	4124.62	294.03	**4418.64**
Over 0 to 8 Miles, Per Air Mile	12179.09	224.27	15.99	**240.26**
Over 8 to 25 Miles, Fixed	189444.34	4124.62	294.03	**4418.64**
Over 8 to 25 Miles, Per Air Mile	12179.09	224.27	15.99	**240.26**
Over 25 to 50 Miles, Fixed	189444.34	4124.62	294.03	**4418.64**
Over 25 to 50 Miles, Per Air Mile	12179.09	224.27	15.99	**240.26**
Over 50 Miles, Fixed	189444.34	4124.62	294.03	**4418.64**
Over 50 Miles, Per Air Mile	17782.46	339.36	24.19	**363.55**

Summary of Results

Qwest Default Values 5/30/02 9:43:47 AM **ICM Version** **2.3**

Recurring Costs
South Dakota

Cost Element	Investment	TELRIC	Common	TELRIC + Common
E-UDIT				
DS1 E-UDIT	5859.48	121.23	8.64	**129.87**
DS3 E-UDIT	23800.79	483.53	34.47	**518.00**
OC3 E-UDIT	45904.82	873.86	62.29	**936.15**
OC12 E-UDIT	65472.60	1273.13	90.76	**1363.89**
OC48 E-UDIT	182787.95	3666.93	261.40	**3928.32**

Summary of Results

Cell: A2
Comment: Results are from the Develop Total Product Costs Spreadsheets which are the first pages in each section.

Cell: A6
mment: Section A - UNBUNDLED LOOP

Description

Unbundled Loops establish a transmission path between the Qwest distribution frame (or equivalent) and the network interface (NI) of the Competitive Local Exchange Carrier's (CLEC) end user. Unbundled loop is available in either a two-wire or four-wire configuration. The actual loop facilities that provide the service may utilize various technologies.

The investments in Unbundled Loops are calculated on a statewide average basis and on a de-averaged basis in up to five zones. Zones are calculated on a MSA (wire center) basis or on the basis of distance from the wire center. Investments are also separated into Feeder, Distribution and Network Interface Device (NID). NID is only on a statewide average basis.

Investment Development

Feeder

Feeder is the main cable leaving the central office, extending to the point where distribution facilities are interconnected. LoopMod builds facilities from the most distant location in each quadrant back to central office, adding demand along the route. The data includes the line demand at the SAI (also sometimes referred to as a Feeder Distribution Interface or FDI), the sub-feeder or lateral length and the main feeder length. At each taper point the line demand is incremented to show total demand used for cable sizing. In addition the distance at each location is used in determining the technology and placement methodology that will be utilized. If the technology used is fiber based DLC, the demand is shown as number of fibers required to support the DLC remote terminals. If the technology selection is copper cable, the demand is shown as copper pairs required. The engineering fill factor is applied to this demand to determine the copper cable size or to determine the DLC size the program will utilize.

Distribution

Distribution is the cable that connects with the feeder and extends the loop to a termination point (i.e., pole or pedestal) near a home or workplace. Distribution is modeled differently than feeder. Generic distribution designs are specified for a range of neighborhoods and business districts, based on the density of access lines. The average investment by component for each design is multiplied by the design percents to produce a distribution investment for each kilofoot of loop length within each wire center group.

The Distribution Group designs are adjusted in LoopMod V2.0 to reflect the density differences that occur DA to DA. Information about each DA is matched against density and building entrance terminal rules to map each DA to the appropriate DG design. The lot oriented designs (DG3, DG4 & DG5) are then adjusted based on a cable multiplier that reflects the difference between the standard design lot frontage and the frontage calculated for each individual DA.

Network Interface Device (NID) Costs are included in the Distribution costs. NID cost is also calculated separately for sell as a separate UNE when the customer does not purchase distribution.

Drop

The service wire or drop is a two to six pair facility that extends from the NID to the terminal on the distribution cable. The terminal contains a connecting block with lugs for terminating the drop wires. Where demand exceeds a certain level, entrance cables, not drops, are used and are terminated on building terminals. The costs for drop are included in the distribution costs.

Network Interface Device (NID)

The NID provides electrical protection and a point of interface between the drop or building entrance cable and the customers' inside wire. The NID may be housed in a small case on the side of residence or business, or it may be in a larger outside wall mounted building terminal for apartment buildings or small office buildings. In high density situations the NID would likely be associated with a terminal in the building basement or equipment closet.

Loop Grooming

The demultiplexing of unbundled loops on integrated digital loop carrier (DLC) uses two options. The first is based on a scenario involving TR-303 DLC in which the unbundled loops are pre-assigned to particular DS1s. These DS1s are routed from the DLC CO multiplexer through a DSX to a Universal DLC COT to demultiplex to a DS0 level and connect to a Main Distribution Frame. The second scenario option assumes a TR-008 DLC with all DS1s passing through the UDLC to groom out the unbundled DS0s and connect them to a Main Distribution Frame. Both options use a Litespan 2000 UDLC COT. Loop Grooming costs are included in Unbudled Loop and Feeder costs.

Billing and Collections

Per line Billing and Collections investments and direct expenses are calculated in a separate study and are input to the QwestICM model.

Summary of Results

All Loop costs include Billing and Collections.

Cell: A30
Comment: Section B - EXTENSION TECHNOLOGY
Description
2 Wire Extension Technology for Integrated Services Digital Network (ISDN) Basic Rate Interface (BRI) is an unbundled element which extends the ISDN BRI signal when the Competitive Local Exchange Carrier's (CLEC's) end user's unbundled loop has more than 40 decibels in loss measured at 40 kHz (based upon 2 Binary 1 Quantinary (2B1Q) line encoding), or the distance is beyond approximately 18 kilofeet between the Company's distribution frame (or equivalent) and the Network Interface (NI) of the Competitive Local Exchange Carrier's (CLEC) end user, where facilities are available.

Investment Development

Unbundled loop investments were obtained from the LoopMod cost model. The model was run twice, once at 100 percent pair gain with POTS and once at 100 percent ISDN with pair gain. The difference between the two sets of investments is the loop investment associated with 2-Wire Extension Technology for ISDN BRI Service.

In order to hand off the ISDN BRS line at a DS0 level, two additional DACS channels, two additional AD4 channel bank channels and one D4 BRITE card are required. The investments associated with this additional equipment are calculated in the Extension Technology cost study via a spreadsheet named DEMUXBRI.XLS.

The incremental loop investment and the investments for the additional equipment are added together to produce the total investment for Extension Technology.

Cell: A35
Comment: Section C - Line Ports
ANALOG LINE PORT
Description
Analog Line Port provides for the interconnection of individual loops to the switching components of the QWEST network. Ports provide access to the basic functionality of the switch, including signaling digit reception and translations, routing and rating, call supervision as well as access to interoffice services. An analog end office port is a two-wire, POTS type line side switch connection.

Cost Methodology
A monthly End Office Port cost is the cost associated with connecting a CLEC line to a QWEST end office switch. The line is assumed to be a copper DS0 pair - not an ISDN line nor a TR-303 or TR-008 integrated line, which has been traditionally referred to as a digital line. It is assumed to be connected to an analog line unit. This cost element is the NTS COE in the switch itself and the associated use of an OE (office equipment) block on the MDF. The labor to cross connect the OE block to the Tie Pair block which terminates the Expanded Interconnect Channel Termination (EICT) is not included in this rate element.

The methodology was to take the Investment per Analog Line and the Investment per MDF OSP Pair from the Switch Module. Because the Investment per Analog Line includes both the MDF OE block and the MDF OSP block, the OSP block investment was removed by subtracting the Investment per MDF OSP Pair from the Investment per Analog Line. Because the cost for the MDF is only broken down for the 5ESS and DMS host switches, the weighted average Investment per MDF OSP Pair for these two switches was subtracted from the weighted average Investment per Analog Line for all switches.

The following switches were eliminated from the statewide average: switches that had no analog lines - e.g., hosts without any lines directly connected to the host or remote switches that were ISDN only.

Cell: A37
Comment: DS0 Trunk Port
DESCRIPTION
The DS0 analog trunk port connects the co-provider to a metallic interface at the common ICDF (or equivalent) in a Qwest central office. The interfaces support a 2-wire or a 4-wire transmission.
STUDY METHODOLOGY
DS0 ANALOG TRUNK Port investment was developed by dividing the DS1 Trunk Port in the Switch Usage Model (SUM) by 24 channels. Then adding the DS1 – DS0 multiplexing investment divided by 24 channels. The sum of the two was divided by the utilization factor.
Billing and collections are also part of this study.

Cell: A38
Comment: DS1 Trunk Port

DESCRIPTION

A DS1 Trunk Port is an unbundled switching product that provides a Co-Provider 4-wire DS1 metallic interface at the common ICDF (or equivalent) within the Qwest central office. The DS1 unbundled trunk port supports up to 24 DS0 channelized trunks. This DS1 trunk port does not provide ISDN PRI capabilities.

STUDY METHODOLOGY

The DS1 Trunk Port investment was developed in the Switch Model (SM).

Billing and collections are also part of this study.

Cell: A39
Comment: BRI ISDN Port

DESCRIPTION

Basic Rate Interface Integrated Services Digital Network (BRI ISDN) is a digital architecture that provides integrated voice and data capability. The Unbundled BRI- ISDN Digital Line Port provides access for the interconnection of the individual loops to the switching components of the USW BRI ISDN network for access to voice, data, image and facsimile functionality. The serving arrangement conforms to the internationally developed, published and recognized standards generated by International Telegraph and Telephone Union (formerly CCITT).

An Unbundled BRI – ISDN Digital Line Port is a digital 2B+D (2 bearer channels for voice or data and 1 delta channel for signaling and D channel packet) line side switch connection with BRI ISDN voice and data basic elements. The Unbundled BRI – ISDN Digital Line Port has interLATA and intraLATA (where available) carrier choice, access to 911 and USW operator services.

The BRI – ISDN Port includes the following:
Non-traffic Sensitive Central Office Equipment
Software Right to Use
Traffic Sensitive – Originating BRI
Traffic Sensitive – Terminating BRI
Standard Features
D – Channel Packet x.75 Link
Billing and Collections

The standard feature list includes:
D Channel – Port Limited Packet Switch
D inter Switch Packet – Port Limited PS
Nonintegrated BRI Without Packet
Nonintegrated Switched Packet Call Setup
Analog Call Appearance

Any additional features available in the switch requested by the customer will be handled on an ICB basis.

STUDY METHODOLOGY

Central office switching feature costs are calculated by first determining incremental switching feature investments. These feature investments are obtained through the use Switching Module (SM) for digital stored program controlled central offices. The switch investments include processor time, memory and hardware appropriate for each feature. Feature utilization data pertaining to each type of feature is input into SM to develop an incremental Engineered, Furnished and Installed (EF&I) feature investment. SM input data is projected by using historical traffic data and best estimates of feature utilization. The switch investments are at a 2000 level.

DACs Port and ISDN end office equipment port and Digipac Port investments are calculated by loading vendor-installed price with power, sales tax (where applicable), land and building, and interest during construction. Link investment between end office and ISDN DAC and between DACs is calculated by the Transport Module (TM). Link investments are added to DACs Port and ISDN End Office equipment and Digipac Port investments and averaged over the number of forecasted ISDN lines.

RTU fees include RTU buy out cost which is averaged over all forecasted and actual Qwest ISDN lines in the 14 state area and additional fees paid per BRI ISDN port by switch type. These fees are added together and levelized over 16.5 years.

Billing and collections are also part of this study.

The investments are converted to monthly costs using monthly cost factors. Factors are represented as investment based and expense based.

Cell: A40
Comment: ISDN PRI Port

DESCRIPTION

Primary Rate Interface Digital ISDN trunk port is a switch termination supporting PRI ISDN functionality. PRI trunk port requires a digital four wire full duplex transmission path between ISDN compatible Customer Premises Equipment (CPE) and a PRI ISDN equipped central office.

The PRI central office equipped trunk port is a DS1 which provides 24 64 Kb/s channels. This product is dedicated call type of PRI with a maximum of 23 possible B channels. The 24th channel must be configured as a D channel, which will carry the signaling and control information. The B channels transmit voice and data.

The PRI – ISDN Port includes the following:
Software Right to Use
Standard Features
Billing and Collections

The standard feature list includes:
Direct inward Dialing (Incoming) (PRI)
Direct Outward Dialing (Dial 9) Incoming (PRI)
PRI Without Packet (23B+D)
Multiline Hunt - Circular

Any additional features available in the switch requested by the customer will be handled on an ICB basis.

STUDY METHODOLOGY

These direct costs occur as a result of providing a PRI ISDN Port.

Central office switching feature costs are calculated by first determining incremental switching feature investments. These feature investments are obtained through the use of the Switch. The switch investments include processor time, memory and hardware appropriate for each feature. Feature utilization data pertaining to each type of feature is input into SM to develop an incremental Engineered, Furnished and Installed (EF&I) feature investment. SM input data is projected by using historical traffic data and best estimates of feature utilization. The switch investments are at a 2000 level.

Billing and collections are also part of this study.

Cell: A41
Comment: DID/PBX Trunk Port

DESCRIPTION OF SERVICE

The DID/PBX Trunk Port is an unbundled switching product that provides a Co- Provider the ability to connect a PBX (Private Branch Exchange) user utilizing the DID (Direct Inward Dialing) functionality to a Qwest DID capable central office.

DID is a special trunking arrangement that permits incoming calls from the exchange network to reach a specific PBX station directly without attendant assistance. DID service is offered with an analog or digital 2-way. If digital, the individual DSO's are 2-way trunks using advanced service that required DID ports. This product allows the Co-Provider to order DID numbers in blocks of 20. Provisioning of the DID feature requires that the Co-Provider subscribe to a sufficient number of trunk ports to adequately handle the volume of incoming calls.

Additional line or trunk features not offered with the basic DID/PBX product, are available to the Co-Provider on an individual case basis. A subsequent order charge will apply to add or change features.

Usage costs are not included in the cost of the DID/PBX Trunk Port. Further, non-recurring charges for the port, first trunk ordered and each additional trunk apply. In addition, recurring and non-recurring charges apply to each DID feature.

STUDY METHODOLOGY: RECURRING COSTS

The costs identified are direct costs that occur as a result of providing a DID/PBX trunk port service. As stated in section "B", above, the analysis studies the trunk termination costs to provide both analog and digital trunk terminations within the central office. The total analog and digital investments are identified separately. The investments are averaged together based relative demand for analog and digital trunks. Central office costs include digital serving wire center offices only.

Costs are included for the following cost components:

Multiplexing Costs: DID analog service requires a trunk side connection which requires DS0 to DS1 muxing to channelize the DS0 to the DS1 level. These investments are acquired from the DS1 Private Line Transport Service Cost Study. Investments associated with multiplexing equipment are acquired from QWEST Network Engineering.

Summary of Results

Main Distributing Frame Costs (MDF): The MDF portion of the central office costs include the equipment used in making the loop plant connections at the central office. Included in this cost are the "tip" or riser cables, a portion of the main distributing frame, connecting blocks, protectors, and miscellaneous wiring.

DSX-1 Costs: The Digital Signal Cross Connect (DSX) frame serves as a standard cross connect frame for digital facilities terminating on the trunk side of the switch. Equipment that terminates at the DSX includes D-type banks, Digital Cross Connect Systems, (DCS), digital switches, and digital multiplexers.

Digital Line Trunk Unit (DLTU) Costs: The DLTU provides a direct interface between DS1 facilities and the switch.

Functionality & Processing Costs: DID Functionality & Processing for DID Trunks is part of a business service available to customers with PBX type equipment. DID Functionality & Processing allows incoming calls on digital one-way, analog two-way, analog one-way, and two-way digital primary channels for ISDN from the network to be routed directly to the appropriate station number without the assistance of an attendant. This analysis studies the trunk functionality & processing associated with a DID trunk at the central office.

Cell: A44
Comment: Section D Local Usage
Local switching UNE consists of:
1) Terminating Interoffice end office switching for one office.
2) Non-Chargable Intercept which includes limited mechanical announcements informing callers of new numbers, referral numbers and/or line status.
3) Billing and Collections which provides the billing mechanism for QWest to charge Competitive Local Exchange Carriers for use of the Qwest local network.
4) AMA measurement equipment which stores information regarding each call that is required for billing purposes.
5) End office measurement investment

Cell: A45
mment: Tandem Switching UNE consists of:
1) This includes the usage sensitive cost of switching a call through a local tandem switch.
2) AMA measurement equipment which stores information regarding each call that is required for billing purposes.
3) Billing and Collections which provides the billing mechanism for Qwest to charge Competitive Local Exchange Carriers for use of the Qwest local network.

Cell: A46
Comment: Local switching LIS consists of:
1) Terminating Interoffice end office switching for one office.
2) Non-Chargable Intercept which includes limited mechanical announcements informing callers of new numbers, referral numbers and/or line status.
3) Billing and Collections which provides the billing mechanism for U S WEST to charge Competitive Local Exchange Carriers for use of the USWC local network.
4) Hewlett Packard measurement equipment which collects information regarding each call that is required for billing purposes.

Local Switching LIS does not include costs for SS7.

Cell: A47
Comment: Tandem Switching LIS consists of the usage sensitive cost of switching a call through a local tandem switch.

It does not inlude the cost of SS7.

Cell: A49
Comment: Tandem Switched Local Transport

Tandem Switched Local Transport provides the transmission path from the end office which originates a call through the local tandem switch to the end office which terminates the call. Tandem Switched Transport consists of two elements:

1) Fixed

This element identifies the usage sensitive costs associated with terminating interoffice facilities in end offices and tandem

switches. These termination costs are stated on a per minute of use basis for each of the mileage bands.

2) Distance Sensitive

The costs identified in this element are also usage sensitive and are associated with the outside plant facilities and intermediate multiplexing equipment which is required to connect central offices and tandem switches in the Qwest network. The costs are different by mileage bands as the costs vary by the distances between the offices. Costs are stated on a per minute of use per mile basis.

Cell: A59
Comment: Section E - Entrance Facility and Direct Trunk Transport
Description
DS1 and DS3 Entrance Facility provides for the communications path between the CLEC's Point of Interface (POI) and the Qwest Serving Wire Center (SWC) of that POI for the sole use of the CLEC. The Entrance Facility includes the fiber facility and supporting structure, transmission and terminating equipment at the serving wire center and the CLEC's POI.

DS1 and DS3 Direct Trunk Transport: Direct Trunk Transport (DTT) provides the transmission path without utilizing tandem switching functions on circuits dedicated to the use of a single CLEC between:

- the CLEC's SWC and an end office, or
- the CLEC's SWC and a local tandem, or
- the CLEC's SWC and a Qwest Hub where multiplexing functions are performed, or
- a Qwest Hub and an end office, or
- a Qwest Hub and a local tandem.

Direct Trunk Transport consists of two elements; fixed and per mile costs. The fixed element contains the costs associated with the terminating equipment at both ends of the transmission path. The per mile costs contain the costs associated with cable, repeaters, and intermediate central office equipment. The fixed are expressed per DS1 or DS3 circuit and the per mile costs are expressed per DS1 or DS3 circuit, per airline mile.

DS3 to DS1 Multiplexing: Central Office Multiplexing includes the equipment necessary for an arrangement that converts a DS3 channel to twenty-eight DS1 (1.544 Mbps) channels utilizing time division multiplexing.

DS1 to DS0 Multiplexing: Central Office Multiplexing includes the equipment necessary for an arrangement that converts a DS1 channel to twenty-four DS0 channels utilizing time division multiplexing.

Investment Development

DS1 and DS3 Entrance Facility investments are calculated using a Microsoft Excel spreadsheet based model called the NAC (Network Access Channel) model. The NAC model estimates the forward looking installed investment associated with DS1 and DS3 circuits between a SWC and a CLEC's POI.

DS1 and DS3 Direct Trunk Transport

The Interoffice Transport investments for DS1 and DS3 were calculated using the Transport Module (TM). TM calculates the weighted average installed investment required for transport over the Qwest interoffice network. A weighted average investment is obtained by weighting the investments for various forward looking interoffice facility configurations by a state specific probability of occurrence.

Multiplexing

The installed investments for the Central Office Multiplexing were calculated using an Excel spreadsheet based on the required equipment specified by Network Standard Configurations.

Qwest Cost Models Used

QwestICM
NAC
Transport Model

Cell: A90
Comment: Section G - 800 Database Service
DESCRIPTION OF SERVICE
800 Database Query Service is an originating service which provides for the forwarding of CLEC end-user-dialed 8XX-NXX-XXXX

calls to a toll carrier, based on the dialed 8XX number. When an 8XX call is originated by a CLEC end user, the CLEC Service Switching Point (SSP) will send an 8XX query to the Qwest 8XX Service Control Point (SCP) through the Qwest Signaling Transfer Point (STP). The Qwest SCP will perform the Carrier Identification Function based on the dialed digits to determine the toll carrier trunk group to which the call should be routed in accordance with the SMS/800 information residing in the Qwest SCP. The SCP will transmit the results of the Carrier Identification Function back to the CLEC SSP through the Qwest STP/Access Tandem. The results of the Carrier Identification Function will be the Carrier Identification Code (CIC) and/or the vertical feature(s) associated with the 8XX number. Call routing information in the SMS/800 reflects the desires of the owner of the 8XX number as entered in the SMS/800 by its chosen Responsible Organization (Resp. Org.).

Vertical Features:
In addition to the basic carrier identification function, 800Database Query Service subscribers may request vertical features through a Responsible Organization in accordance with the SMS/800 User Guide. Vertical features will be maintained within the Qwest SCP when technically feasible.

POTS Translation:
The POTS Translation vertical feature provides the option of having the ten-digit POTS number (i.e., NPA-NXX-XXXX) delivered instead of the 8XX dialed number (i.e., 1+8XX-XXXX) delivered to the service provider.

Call Handling and Destination Features:
Call Handling and Destination Features allow service subscriber's variable routing options by specifying a single carrier, multiple carriers (Exchange and/or Inter-exchange Carriers), single termination or multiple terminations.

STUDY METHODOLOGY
The hardware and software equipment costs were identified using the Switching Cost Model (SCM) Signaling System 7 (SS7) model. This model was developed to determine the economic costs of Qwest's Common Channel Signaling (CCS)/SS7 network. These economic costs are used to estimate the costs of services that use the SS7 network. One of these services is the InterLATA and IntraLATA 8XX Service. The term "cost" used in the model refers to initial cash outlays for hardware and software. Because software may be expensed, the term investment is not used. The model outputs expressed in terms of costs represent only the initial cash outlays. These outputs are the basis upon which the capital-related and operating expenses associated with these initial cash outlays are computed.

The SCM outputs were input to the TELRIC Cost Model. Factors were applied, including maintenance, ad valorem tax, administrative expense, common, business fees, power, sales tax, telco, interest during construction (IDC), land and building, sales expense, attributed costs and product management expense.

All costs, one time and recurring, were spread over the total levelized 8XX Database calls. The onetime costs are the 8XX Database Application Software and CRIS/CABS programming costs. The recurring costs include ISCP Expenses (Software On-site Installation and Support, Telegate Support per Year, Telecordia Software Support, IBM Software Mtce. Support, SMS/800 Management Team Billing).

Costs are developed for a "Basic Query", "POTS Translation" and "Call Handling".

Cell: A95
Comment: Section H - LIDB
DESCRIPTION
LIDB Query Service is a per query Switched Access Service. The query is assessed on all completed queries regardless of the output of the data. The query represents the transport from the Local Signaling Transfer Point (LSTP) to the Regional Signaling Transfer Point (RSTP) through the Message Relay Service (MRS) to the Service Control Point (SCP) and the actual retrieval of the data from the database. The query also is assessed on queries from the LSTP to the RSTP through the MRS then launched to another provider's SCP.

LIDB Query Service allows a CLEC to query QWEST's LIDB and secure the information to:
- Validate a calling card
- Automatically identify acceptance or rejection of collect or billed or third number calls, identify the billed number as a QWEST public or semi-public number, identify central office codes as vacant or active
- Identify originating screening profiles associated with working telephone numbers,
- Retrieve CLEC-defined data that the CLEC has stored in the QWEST LIDB

Thus, when a CLEC sends a Calling Card Verification query, a Billing Number Service query, an Originating Line Number Screening query or a GetData query to the QWEST SS7 network through the interconnection at the LSTP, the CLEC will be assessed a LIDB Query Service query charge.

STUDY METHODOLOGY

Summary of Results

The costs are those which result from providing LIDB Query Service. Included in the per query cost are the following:

1. LSTP hardware, LSTP software, LSTP to RSTP data link hardware and software, RSTP hardware, RSTP software, RSTP to MRS SCP data link hardware and software, RSTP to LIDB SCP data link hardware and software, LIDB SCP hardware and software, MRS SCP hardware and software.

2. Database costs and associated labor.

Cell: A98
Comment: Section I - SIGNALING
DESCRIPTION
SS7 Signaling provides a means for transporting signaling information across our network. The following message types were studied:

Signal formulation is the capability of a Common Channel Signaling (CCS) end office or tandem switch to create or decode a CCS message. The ISUP Signal Formulation rate element recovers the costs associated with the formulation of call-related signaling messages for call setup, Integrated Services Digital Network (ISDN) User Part (ISUP), on a per signal message basis. ISUP message length and content specifications are described in CCS/Signaling System 7 protocol.

Signal transport is the capability of the Common Channel Signaling (CCS) data links to carry a signaling message from one signaling network element to another. The ISUP and TCAP Signal Transport rate elements recover the costs associated with the transmission of signaling data between the local Signal Transfer Point (STP) and the Service Switching Point (SSP) end office on a per signal message basis.

Signal switching is the capability performed by the STP to route a signal message to its proper destination. The ISUP and TCAP Signal Switching rate elements recover the costs associated with switching and routing ISUP and TCAP signaling messages at the local and regional STP on a per signal message basis.

STUDY METHODOLOGY
This study uses the SS7 model to identify the investment and expenses associated with SS7 Signaling. The model identifies the type and amount of hardware and/or software required for each component. Appropriate factors are then applied to convert the per octet or millisecond investments from SCM to per signaled message investments and to convert busy season busy hour investments to annualized per unit investments.

This study also includes the costs associated with measuring and billing the Signaling Unbundled Network Elements (UNE). Investment and direct expense costs of the CROSS7/AMAT7 systems are a part of each UNE signaling rate element cost per signaled message.

Cell: A104
Comment: The STP Port is the customer dedicated point of termination to the signal switching capability of the STP. Each STP port requires an STP link.

The STP port costs were developed from vendor purchase prices. Monthly costs relative to these investments were developed through the use of the STP Port Model, v1.1.xls spreadsheet.

Cell: A106
Comment: Section J - Shared Transport
DESCRIPTION OF SERVICES
Shared Transport is defined as the Co-Provider use of capacity on the U S WEST interoffice message trunk network and central office routing tables for the delivery of switched, voice grade traffic between USW end offices and tandem switches within the local calling area.

Shared Transport is only provided with Unbundled Local Switch Port elements. The existing routing tables resident in the switch will direct both U S WEST and Co-Provider traffic over U S WEST interoffice message trunk network. The Co-Provider may custom route operator services and directory assistance calls to unique trunks. The Co-Provider may not mix unbundled dedicated interoffice message trunk transport and shared transport in the same local calling area.

STUDY METHODOLOGY
This study uses the U S WEST Transport Module (TM) and Switching Module (SM) to calculate the investments associated with transporting calls over the U S WEST interoffice network. The output workbook converts TM and SM outputs to monthly equivalent investments using monthly traffic and mileage data. These investments are in turn converted to monthly costs using the factors

calculated by the Expense Factors Module and Capital Costs Module.

STUDY ASSUMPTIONS

a. Costs are based on a least cost scorched node scenario and represent the cost of fully replacing the network required to provision the service, beginning from the existing grid of network nodes used by U S WEST today.
b. Costs do not reflect the emergence of widespread competition in the local exchange market.
c. All network investments are forward-looking:
i. Switching and transport equipment and facilities are digital.
ii. SONET is the forward looking technology in the interoffice network.
d. Standby capacity is a volume-sensitive cost. Non-volume sensitive spare switching capacity (e.g., modular spare) is a shared cost. Please refer to documentation for the Switching Module for further explanation.

Cell: A110
Comment: Section K - UDIT/EEL
Unbundled Dedicated Interoffice Transport (UDIT) provides the CLEC with a network element of a single transmission path between USW Wire Centers in the same LATA and state. UDIT is a bandwidth-specific interoffice transmission path designed to a DSX panel (or equivalent) in each Qwest Wire Center. The CLEC must have collocation in the USW serving wire center and have requested termination capacity through the collocation process. UDIT is available in DS0, DS1, DS3, OC-3, OC-12 and OC-48 where facilities are available. UDIT is distance sensitive and is for the sole use of the CLEC. The CLEC can assign channels and transport its choice of voice or data. UDIT is a point-to-point transmission path and not a self healing product.

UDIT consists of two elements; fixed and per mile costs. The fixed element contains the costs associated with the terminating equipment at both ends of the transmission path. The per mile costs contain the costs associated with cable, repeaters, and intermediate central office equipment. The fixed are expressed per DS0, DS1, DS3, OC-3, OC-12 or OC-48 circuit and the per mile costs are expressed per DS0, DS1, DS3, OC-3, OC-12 or OC-48 circuit, per airline mile.

The costs of DS0, DS1, DS3, OC3, OC12 or OC48 EEL are equivalent to the costs of the corresponding UDIT.

Investment Development

The Interoffice Transport investments for DS0, DS1, DS3, OC-3, OC-12 and OC-48 were calculated using the Transport Module (TM). TM calculates the weighted average installed investment required for transport over the Qwest interoffice network. A weighted average investment is obtained by weighting the investments for various forward looking interoffice facility configurations by a state specific probability of occurrence.

Cell: A111
Comment: DS3 to DS1 Multiplexing: Central Office Multiplexing includes the equipment necessary for an arrangement that converts a DS3 channel to twenty-eight DS1 (1.544 Mbps) channels utilizing time division multiplexing.

DS1 to DS0 Multiplexing: Central Office Multiplexing includes the equipment necessary for an arrangement that converts a DS1 channel to twenty-four DS0 channels utilizing time division multiplexing.

The multiplexing costs are aqual to the multiplexing costs provided in this study for Direct Trunked Transport.

Cell: A175
Comment: E-UDIT:
Extended Unbundled Dedicated Interoffice Transport (EUDIT) provides the CLEC with a bandwidth specific transmission path between the Qwest Serving Wire Center to the CLEC's wire center or an IXC's point of presence located within the same Qwest Serving Wire Center area. EUDIT is available in DS0, DS1, DS3, OC-3, OC-12, and OC-48 bandwidths where facilities are available. CLEC can assign channels and transport its choice of voice or data. Specifications, interfaces and parameters are described in Qwest Technical Publication 77389.

EUDIT investments are calculated using a Microsoft Excel spreadsheet based model called the NAC (Network Access Channel) model. The NAC model estimates the forward looking installed investment associated with circuits between a SWC and a CLEC's POI.

CONTINUATION

[6]

Study ID #6466

Qwest Default Values 5/30/02 9:43:47 AM

South Dakota

Qwest

Integrated Cost Model Interconnection TELRIC Results

2002 Recurring Cost Study



Table of Contents

Subject	Page
Summary - Interconnection TELRIC Summary of Recurring Costs	
Section A - Unbundled Loop	
Development of Total Product Costs	1
Investment Cost Calculation	5
Zone and Office Specific Loop Costs	9
Defaults and Overrides	18
Investment Development	20
Investment Module Outputs	24
Section B - Extension Technology	
Development of Total Product Costs	1
Investment Cost Calculation	2
Investment Development	3
Investment Module Outputs	7
Section C - Line and Trunk Ports	
Development of Total Product Costs	1
Investment Cost Calculation	2
Investment and Expense Development	4
Investment Module Outputs	14
Defaults and Overrides	15
Section D - Local and Usage	
Development of Total Product Costs	1
Investment Cost Calculation	2
Defaults and Overrides	5
Investment and Expense Development	7
Investment Module Outputs	10
Hold Times	13
Section E - Entrance Facilities and Direct Trunked Transport	
Development of Total Product Costs	1
Investment Cost Calculation	3
Defaults and Overrides	8
Investment Module Outputs	10
Section F - Intentionally Left Blank	

Section G - 8XX Database Services

Development of Total Product Costs	1
Investment Cost Calculation	2
Investment and Expense Inputs	3

Section H - Line Information Database

Development of Total Product Costs	1
Investment Cost Calculation	2
Investment and Expense Inputs	3

Section I - Signaling

Development of Total Product Costs	1
Investment Cost Calculation	2
Investment and Expense Inputs	4

Section J - Shared Transport

Development of Total Product Costs	1
Investment Cost Calculation	2
Defaults and Overrides	3
Investment Development	4
Investment Module Outputs	7

Section K - UDIT/EEL

Development of Total Product Costs	1
Investment Cost Calculation	8
Defaults and Overrides	17
Investment Module Outputs	18

Appendix - Factors, Investment Loadings and ICM Inputs

Expense Factors	1
Investment Based Factors	3
Billing	10
Land & Building Factors	12
Investment Loadings	13
ICM Run Data	15

Summary of Results

Qwest Default Values 5/30/02 9:43:47 AM — **ICM Version** 2.3

Recurring Costs
South Dakota

Cost Element	Investment	TELRIC	Common	TELRIC + Common
Section A - Unbundled Loop				
2 Wire				
Unbundled Loop (2 Wire) Statewide Average	1349.93	28.32	2.02	**30.34**
Unbundled Loop (2 Wire) Zone 1	707.04	18.16	2.02	**20.18**
Unbundled Loop (2 Wire) Zone 2	1297.83	27.70	2.02	**29.72**
Unbundled Loop (2 Wire) Zone 3	1848.70	36.13	2.02	**38.15**
4 Wire				
Unbundled Loop (4 Wire) Statewide Average	2699.87	56.63	4.04	**60.66**
Unbundled Loop (4 Wire) Zone 1	1414.07	36.29	4.04	**40.33**
Unbundled Loop (4 Wire) Zone 2	2595.66	55.39	4.04	**59.42**
Unbundled Loop (4 Wire) Zone 3	3697.41	72.24	4.04	**76.27**
Unbundled Loop Grooming				
Unbundled Loop Grooming (2 Wire)	72.60	1.50	0.11	**1.60**
Unbundled Loop Grooming (4 Wire)	172.00	3.52	0.25	**3.77**
Network Interface Device (NID)				
Network Interface Device (2 Wire) Statewide Average	42.37	0.98	0.07	**1.05**
Section B - Extension Technology				
2-Wire Extension Technology	217.63	4.44	0.32	**4.76**
2-Wire Extension Technology - Unbundled Loop Grooming	98.53	2.16	0.15	**2.31**
Section C - Line and Trunk Ports				
DS0 Analog Line Port	72.226	1.4803	0.1055	**1.5859**
Each Addditional DS0 Analog Line Port	72.226	1.4803	0.1055	**1.5859**
DS0 Trunk Port	1009.616	20.5062	1.4618	**21.968**
DS1 Trunk Port	4081.228	82.4468	5.8773	**88.324**
ISDN BRI Port	360.431	9.9778	0.7113	**10.6891**
ISDN PRI Port	9069.126	183.1832	13.0583	**196.24**
DID/PBX Trunk Port per DS0	188.504	3.8290	0.2730	**4.1019**
Section D - Local Usage				
Local Switching UNE per Minute of Use	0.0146776	0.0039587	0.0002822	**0.004241**
Tandem Switching UNE per Minute of Use	0.0086717	0.0024821	0.0001769	**0.002659**
Local Switching LIS per Minute of Use	0.0085970	0.0025425	0.0001812	**0.002724**
Tandem Switching LIS per Minute of Use	0.0057219	0.0013867	0.0000989	**0.001486**
Tandem Switched Local Transport				
Fixed per Minute of Use 0 to 8 Miles	0.0046303	0.0012045	0.0000859	**0.001290**
Fixed per Minute of Use 8 to 25 Miles	0.0046303	0.0012045	0.0000859	**0.001290**
Fixed per Minute of Use 25 to 50 Miles	0.0046303	0.0012045	0.0000859	**0.001290**
Fixed per Minute of Use Over 50 Miles	0.0041331	0.0010752	0.0000766	**0.001152**
Distance Sensitive per Minute of Use per Mile from 0 to 8 miles	0.0001160	0.0000262	0.0000019	**0.0000280**
Distance Sensitive per Minute of Use per Mile from 8 to 25 miles	0.0001160	0.0000262	0.0000019	**0.0000280**
Distance Sensitive per Minute of Use per Mile from 25 to 50 miles	0.0001160	0.0000262	0.0000019	**0.0000280**
Distance Sensitive per Minute of Use per Mile over 50 miles	0.0000724	0.0000168	0.0000012	**0.0000180**
Section E - Entrance Facilities and Direct Trunked Transport				
Entrance Facilities				

Summary of Results

Qwest Default Values 5/30/02 9:43:47 AM **ICM Version 2.3**

Recurring Costs
South Dakota

Cost Element	Investment	TELRIC	Common	TELRIC + Common
DS1 Entrance Facility	5859.48	121.23	8.64	**129.87**
DS3 Entrance Facility	23800.79	483.53	34.47	**518.00**
Multiplexing				
Multiplexing DS3 to DS1	15554.00	317.38	22.62	**340.00**
Multiplexing DS1 to DS0	13662.97	278.79	19.87	**298.66**
DS1 Direct Trunked Transport				
Over 0 to 8 Miles, Fixed	3333.85	72.59	5.17	**77.76**
Over 0 to 8 Miles, Per Air Mile	157.51	2.94	0.21	**3.15**
Over 8 to 25 Miles, Fixed	3333.85	72.59	5.17	**77.76**
Over 8 to 25 Miles, Per Air Mile	157.51	2.94	0.21	**3.15**
Over 25 to 50 Miles, Fixed	3333.85	72.59	5.17	**77.76**
Over 25 to 50 Miles, Per Air Mile	157.51	2.94	0.21	**3.15**
Over 50 Miles, Fixed	2968.98	64.64	4.61	**69.25**
Over 50 Miles, Per Air Mile	102.85	2.00	0.14	**2.14**
DS3 Direct Trunked Transport				
Over 0 to 8 Miles, Fixed	18992.72	413.51	29.48	**442.99**
Over 0 to 8 Miles, Per Air Mile	1581.99	29.13	2.08	**31.21**
Over 8 to 25 Miles, Fixed	18992.72	413.51	29.48	**442.99**
Over 8 to 25 Miles, Per Air Mile	1581.99	29.13	2.08	**31.21**
Over 25 to 50 Miles, Fixed	18992.72	413.51	29.48	**442.99**
Over 25 to 50 Miles, Per Air Mile	1581.99	29.13	2.08	**31.21**
Over 50 Miles, Fixed	16242.92	353.64	25.21	**378.85**
Over 50 Miles, Per Air Mile	886.87	17.29	1.23	**18.52**
Section F - Intentionally Left Blank				
Section G - 8XX Database Services				
Basic Query	0.00178522	0.01941843	0.00138425	**0.020803**
Call Handling and Destination	0.00000706	0.00000171	0.00000012	**0.00000183**
POTS Translation	0.00000235	0.00000057	0.00000004	**0.00000061**
Section H - Line Information Database				
LIDB per Query	0.0019475	0.0008573	0.0000611	**0.0009184**
Section I - Signaling				
ISUP Signal Formulation	0.002589	0.0006275	0.0000447	**0.0006722**
ISUP Signal Transport	0.000810	0.0002018	0.0000144	**0.0002161**
TCAP Signal Transport	0.000091	0.0000223	0.0000016	**0.0000239**
ISUP Signal Switching	0.002966	0.0010076	0.0000718	**0.0010794**
TCAP Signal Switching	0.002245	0.0008328	0.0000594	**0.0008921**
STP Port	12738.33	257.27	18.34	**275.60**
Section J - Shared Transport				
Shared Transport per MOU	0.007064	0.002121	0.000151	**0.002272**
Section K - UDIT/EEL				
Multiplexing				
Multiplexing DS3 to DS1	15554.00	317.38	22.62	**340.00**
Multiplexing DS1 to DS0	13662.97	278.79	19.87	**298.66**
DS0 UDIT/EEL				
Over 0 to 8 Miles, Fixed	1468.20	31.97	2.28	**34.24**

Summary of Results

Qwest Default Values 5/30/02 9:43:47 AM **ICM Version 2.3**

Recurring Costs
South Dakota

Cost Element	Investment	TELRIC	Common	TELRIC + Common
Over 0 to 8 Miles, Per Air Mile	14.94	0.28	0.02	**0.30**
Over 8 to 25 Miles, Fixed	1468.20	31.97	2.28	**34.24**
Over 8 to 25 Miles, Per Air Mile	14.94	0.28	0.02	**0.30**
Over 25 to 50 Miles, Fixed	1468.20	31.97	2.28	**34.24**
Over 25 to 50 Miles, Per Air Mile	14.94	0.28	0.02	**0.30**
Over 50 Miles, Fixed	1436.31	31.27	2.23	**33.50**
Over 50 Miles, Per Air Mile	10.76	0.21	0.01	**0.22**
DS1 UDIT/EEL				
Over 0 to 8 Miles, Fixed	3333.85	72.59	5.17	**77.76**
Over 0 to 8 Miles, Per Air Mile	157.51	2.94	0.21	**3.15**
Over 8 to 25 Miles, Fixed	3333.85	72.59	5.17	**77.76**
Over 8 to 25 Miles, Per Air Mile	157.51	2.94	0.21	**3.15**
Over 25 to 50 Miles, Fixed	3333.85	72.59	5.17	**77.76**
Over 25 to 50 Miles, Per Air Mile	157.51	2.94	0.21	**3.15**
Over 50 Miles, Fixed	2968.98	64.64	4.61	**69.25**
Over 50 Miles, Per Air Mile	102.85	2.00	0.14	**2.14**
DS3 UDIT/EEL				
Over 0 to 8 Miles, Fixed	18992.72	413.51	29.48	**442.99**
Over 0 to 8 Miles, Per Air Mile	1581.99	29.13	2.08	**31.21**
Over 8 to 25 Miles, Fixed	18992.72	413.51	29.48	**442.99**
Over 8 to 25 Miles, Per Air Mile	1581.99	29.13	2.08	**31.21**
Over 25 to 50 Miles, Fixed	18992.72	413.51	29.48	**442.99**
Over 25 to 50 Miles, Per Air Mile	1581.99	29.13	2.08	**31.21**
Over 50 Miles, Fixed	16242.92	353.64	25.21	**378.85**
Over 50 Miles, Per Air Mile	886.87	17.29	1.23	**18.52**
OC3 UDIT/EEL				
Over 0 to 8 Miles, Fixed	32703.21	712.02	50.76	**762.78**
Over 0 to 8 Miles, Per Air Mile	2425.94	44.67	3.18	**47.86**
Over 8 to 25 Miles, Fixed	32703.21	712.02	50.76	**762.78**
Over 8 to 25 Miles, Per Air Mile	2425.94	44.67	3.18	**47.86**
Over 25 to 50 Miles, Fixed	32703.21	712.02	50.76	**762.78**
Over 25 to 50 Miles, Per Air Mile	2425.94	44.67	3.18	**47.86**
Over 50 Miles, Fixed	32703.21	712.02	50.76	**762.78**
Over 50 Miles, Per Air Mile	3371.74	63.89	4.55	**68.44**
OC12 UDIT/EEL				
Over 0 to 8 Miles, Fixed	92776.29	2019.94	143.99	**2163.94**
Over 0 to 8 Miles, Per Air Mile	4815.98	88.68	6.32	**95.01**
Over 8 to 25 Miles, Fixed	92776.29	2019.94	143.99	**2163.94**
Over 8 to 25 Miles, Per Air Mile	4815.98	88.68	6.32	**95.01**
Over 25 to 50 Miles, Fixed	92776.29	2019.94	143.99	**2163.94**
Over 25 to 50 Miles, Per Air Mile	4815.98	88.68	6.32	**95.01**
Over 50 Miles, Fixed	92776.29	2019.94	143.99	**2163.94**
Over 50 Miles, Per Air Mile	6955.05	132.52	9.45	**141.97**
OC48 UDIT/EEL				
Over 0 to 8 Miles, Fixed	189444.34	4124.62	294.03	**4418.64**
Over 0 to 8 Miles, Per Air Mile	12179.09	224.27	15.99	**240.26**
Over 8 to 25 Miles, Fixed	189444.34	4124.62	294.03	**4418.64**
Over 8 to 25 Miles, Per Air Mile	12179.09	224.27	15.99	**240.26**
Over 25 to 50 Miles, Fixed	189444.34	4124.62	294.03	**4418.64**
Over 25 to 50 Miles, Per Air Mile	12179.09	224.27	15.99	**240.26**
Over 50 Miles, Fixed	189444.34	4124.62	294.03	**4418.64**
Over 50 Miles, Per Air Mile	17782.46	339.36	24.19	**363.55**

Summary of Results

Qwest Default Values 5/30/02 9:43:47 AM **ICM Version** **2.3**

Recurring Costs
South Dakota

Cost Element	Investment	TELRIC	Common	TELRIC + Common
E-UDIT				
DS1 E-UDIT	5859.48	121.23	8.64	**129.87**
DS3 E-UDIT	23800.79	483.53	34.47	**518.00**
OC3 E-UDIT	45904.82	873.86	62.29	**936.15**
OC12 E-UDIT	65472.60	1273.13	90.76	**1363.89**
OC48 E-UDIT	182787.95	3666.93	261.40	**3928.32**

Summary of Results

Cell: A2
Comment: Results are from the Develop Total Product Costs Spreadsheets which are the first pages in each section.

Cell: A6
mment: Section A - UNBUNDLED LOOP

Description

Unbundled Loops establish a transmission path between the Qwest distribution frame (or equivalent) and the network interface (NI) of the Competitive Local Exchange Carrier's (CLEC) end user. Unbundled loop is available in either a two-wire or four-wire configuration. The actual loop facilities that provide the service may utilize various technologies.

The investments in Unbundled Loops are calculated on a statewide average basis and on a de-averaged basis in up to five zones. Zones are calculated on a MSA (wire center) basis or on the basis of distance from the wire center. Investments are also separated into Feeder, Distribution and Network Interface Device (NID). NID is only on a statewide average basis.

Investment Development

Feeder

Feeder is the main cable leaving the central office, extending to the point where distribution facilities are interconnected. LoopMod builds facilities from the most distant location in each quadrant back to central office, adding demand along the route. The data includes the line demand at the SAI (also sometimes referred to as a Feeder Distribution Interface or FDI), the sub-feeder or lateral length and the main feeder length. At each taper point the line demand is incremented to show total demand used for cable sizing. In addition the distance at each location is used in determining the technology and placement methodology that will be utilized. If the technology used is fiber based DLC, the demand is shown as number of fibers required to support the DLC remote terminals. If the technology selection is copper cable, the demand is shown as copper pairs required. The engineering fill factor is applied to this demand to determine the copper cable size or to determine the DLC size the program will utilize.

Distribution

Distribution is the cable that connects with the feeder and extends the loop to a termination point (i.e., pole or pedestal) near a home or workplace. Distribution is modeled differently than feeder. Generic distribution designs are specified for a range of neighborhoods and business districts, based on the density of access lines. The average investment by component for each design is multiplied by the design percents to produce a distribution investment for each kilofoot of loop length within each wire center group.

The Distribution Group designs are adjusted in LoopMod V2.0 to reflect the density differences that occur DA to DA. Information about each DA is matched against density and building entrance terminal rules to map each DA to the appropriate DG design. The lot oriented designs (DG3, DG4 & DG5) are then adjusted based on a cable multiplier that reflects the difference between the standard design lot frontage and the frontage calculated for each individual DA.

Network Interface Device (NID) Costs are included in the Distribution costs. NID cost is also calculated separately for sell as a separate UNE when the customer does not purchase distribution.

Drop

The service wire or drop is a two to six pair facility that extends from the NID to the terminal on the distribution cable. The terminal contains a connecting block with lugs for terminating the drop wires. Where demand exceeds a certain level, entrance cables, not drops, are used and are terminated on building terminals. The costs for drop are included in the distribution costs.

Network Interface Device (NID)

The NID provides electrical protection and a point of interface between the drop or building entrance cable and the customers' inside wire. The NID may be housed in a small case on the side of residence or business, or it may be in a larger outside wall mounted building terminal for apartment buildings or small office buildings. In high density situations the NID would likely be associated with a terminal in the building basement or equipment closet.

Loop Grooming

The demultiplexing of unbundled loops on integrated digital loop carrier (DLC) uses two options. The first is based on a scenario involving TR-303 DLC in which the unbundled loops are pre-assigned to particular DS1s. These DS1s are routed from the DLC CO multiplexer through a DSX to a Universal DLC COT to demultiplex to a DS0 level and connect to a Main Distribution Frame. The second scenario option assumes a TR-008 DLC with all DS1s passing through the UDLC to groom out the unbundled DS0s and connect them to a Main Distribution Frame. Both options use a Litespan 2000 UDLC COT. Loop Grooming costs are included in Unbudled Loop and Feeder costs.

Billing and Collections

Per line Billing and Collections investments and direct expenses are calculated in a separate study and are input to the QwestICM model.

Summary of Results

All Loop costs include Billing and Collections.

Cell: A30
Comment: Section B - EXTENSION TECHNOLOGY
Description
2 Wire Extension Technology for Integrated Services Digital Network (ISDN) Basic Rate Interface (BRI) is an unbundled element which extends the ISDN BRI signal when the Competitive Local Exchange Carrier's (CLEC's) end user's unbundled loop has more than 40 decibels in loss measured at 40 kHz (based upon 2 Binary 1 Quantinary (2B1Q) line encoding), or the distance is beyond approximately 18 kilofeet between the Company's distribution frame (or equivalent) and the Network Interface (NI) of the Competitive Local Exchange Carrier's (CLEC) end user, where facilities are available.

Investment Development

Unbundled loop investments were obtained from the LoopMod cost model. The model was run twice, once at 100 percent pair gain with POTS and once at 100 percent ISDN with pair gain. The difference between the two sets of investments is the loop investment associated with 2-Wire Extension Technology for ISDN BRI Service.

In order to hand off the ISDN BRS line at a DS0 level, two additional DACS channels, two additional AD4 channel bank channels and one D4 BRITE card are required. The investments associated with this additional equipment are calculated in the Extension Technology cost study via a spreadsheet named DEMUXBRI.XLS.

The incremental loop investment and the investments for the additional equipment are added together to produce the total investment for Extension Technology.

Cell: A35
Comment: Section C - Line Ports
ANALOG LINE PORT
Description
Analog Line Port provides for the interconnection of individual loops to the switching components of the QWEST network. Ports provide access to the basic functionality of the switch, including signaling digit reception and translations, routing and rating, call supervision as well as access to interoffice services. An analog end office port is a two-wire, POTS type line side switch connection.

Cost Methodology
A monthly End Office Port cost is the cost associated with connecting a CLEC line to a QWEST end office switch. The line is assumed to be a copper DS0 pair - not an ISDN line nor a TR-303 or TR-008 integrated line, which has been traditionally referred to as a digital line. It is assumed to be connected to an analog line unit. This cost element is the NTS COE in the switch itself and the associated use of an OE (office equipment) block on the MDF. The labor to cross connect the OE block to the Tie Pair block which terminates the Expanded Interconnect Channel Termination (EICT) is not included in this rate element.

The methodology was to take the Investment per Analog Line and the Investment per MDF OSP Pair from the Switch Module. Because the Investment per Analog Line includes both the MDF OE block and the MDF OSP block, the OSP block investment was removed by subtracting the Investment per MDF OSP Pair from the Investment per Analog Line. Because the cost for the MDF is only broken down for the 5ESS and DMS host switches, the weighted average Investment per MDF OSP Pair for these two switches was subtracted from the weighted average Investment per Analog Line for all switches.

The following switches were eliminated from the statewide average: switches that had no analog lines - e.g., hosts without any lines directly connected to the host or remote switches that were ISDN only.

Cell: A37
Comment: DS0 Trunk Port
DESCRIPTION
The DS0 analog trunk port connects the co-provider to a metallic interface at the common ICDF (or equivalent) in a Qwest central office. The interfaces support a 2-wire or a 4-wire transmission.
STUDY METHODOLOGY
DS0 ANALOG TRUNK Port investment was developed by dividing the DS1 Trunk Port in the Switch Usage Model (SUM) by 24 channels. Then adding the DS1 – DS0 multiplexing investment divided by 24 channels. The sum of the two was divided by the utilization factor.
Billing and collections are also part of this study.

Cell: A38
Comment: DS1 Trunk Port

DESCRIPTION

A DS1 Trunk Port is an unbundled switching product that provides a Co-Provider 4-wire DS1 metallic interface at the common ICDF (or equivalent) within the Qwest central office. The DS1 unbundled trunk port supports up to 24 DS0 channelized trunks. This DS1 trunk port does not provide ISDN PRI capabilities.

STUDY METHODOLOGY

The DS1 Trunk Port investment was developed in the Switch Model (SM).

Billing and collections are also part of this study.

Cell: A39
Comment: BRI ISDN Port

DESCRIPTION

Basic Rate Interface Integrated Services Digital Network (BRI ISDN) is a digital architecture that provides integrated voice and data capability. The Unbundled BRI- ISDN Digital Line Port provides access for the interconnection of the individual loops to the switching components of the USW BRI ISDN network for access to voice, data, image and facsimile functionality. The serving arrangement conforms to the internationally developed, published and recognized standards generated by International Telegraph and Telephone Union (formerly CCITT).

An Unbundled BRI – ISDN Digital Line Port is a digital 2B+D (2 bearer channels for voice or data and 1 delta channel for signaling and D channel packet) line side switch connection with BRI ISDN voice and data basic elements. The Unbundled BRI – ISDN Digital Line Port has interLATA and intraLATA (where available) carrier choice, access to 911 and USW operator services.

The BRI – ISDN Port includes the following:
Non-traffic Sensitive Central Office Equipment
Software Right to Use
Traffic Sensitive – Originating BRI
Traffic Sensitive – Terminating BRI
Standard Features
D – Channel Packet x.75 Link
Billing and Collections

The standard feature list includes:
D Channel – Port Limited Packet Switch
D inter Switch Packet – Port Limited PS
Nonintegrated BRI Without Packet
Nonintegrated Switched Packet Call Setup
Analog Call Appearance

Any additional features available in the switch requested by the customer will be handled on an ICB basis.

STUDY METHODOLOGY

Central office switching feature costs are calculated by first determining incremental switching feature investments. These feature investments are obtained through the use Switching Module (SM) for digital stored program controlled central offices. The switch investments include processor time, memory and hardware appropriate for each feature. Feature utilization data pertaining to each type of feature is input into SM to develop an incremental Engineered, Furnished and Installed (EF&I) feature investment. SM input data is projected by using historical traffic data and best estimates of feature utilization. The switch investments are at a 2000 level.

DACs Port and ISDN end office equipment port and Digipac Port investments are calculated by loading vendor-installed price with power, sales tax (where applicable), land and building, and interest during construction. Link investment between end office and ISDN DAC and between DACs is calculated by the Transport Module (TM). Link investments are added to DACs Port and ISDN End Office equipment and Digipac Port investments and averaged over the number of forecasted ISDN lines.

RTU fees include RTU buy out cost which is averaged over all forecasted and actual Qwest ISDN lines in the 14 state area and additional fees paid per BRI ISDN port by switch type. These fees are added together and levelized over 16.5 years.

Billing and collections are also part of this study.

The investments are converted to monthly costs using monthly cost factors. Factors are represented as investment based and expense based.

Cell: A40
Comment: ISDN PRI Port

DESCRIPTION

Primary Rate Interface Digital ISDN trunk port is a switch termination supporting PRI ISDN functionality. PRI trunk port requires a digital four wire full duplex transmission path between ISDN compatible Customer Premises Equipment (CPE) and a PRI ISDN equipped central office.

The PRI central office equipped trunk port is a DS1 which provides 24 64 Kb/s channels. This product is dedicated call type of PRI with a maximum of 23 possible B channels. The 24th channel must be configured as a D channel, which will carry the signaling and control information. The B channels transmit voice and data.

The PRI – ISDN Port includes the following:
Software Right to Use
Standard Features
Billing and Collections

The standard feature list includes:
Direct inward Dialing (Incoming) (PRI)
Direct Outward Dialing (Dial 9) Incoming (PRI)
PRI Without Packet (23B+D)
Multiline Hunt - Circular

Any additional features available in the switch requested by the customer will be handled on an ICB basis.

STUDY METHODOLOGY

These direct costs occur as a result of providing a PRI ISDN Port.

Central office switching feature costs are calculated by first determining incremental switching feature investments. These feature investments are obtained through the use of the Switch. The switch investments include processor time, memory and hardware appropriate for each feature. Feature utilization data pertaining to each type of feature is input into SM to develop an incremental Engineered, Furnished and Installed (EF&I) feature investment. SM input data is projected by using historical traffic data and best estimates of feature utilization. The switch investments are at a 2000 level.

Billing and collections are also part of this study.

Cell: A41
Comment: DID/PBX Trunk Port

DESCRIPTION OF SERVICE

The DID/PBX Trunk Port is an unbundled switching product that provides a Co- Provider the ability to connect a PBX (Private Branch Exchange) user utilizing the DID (Direct Inward Dialing) functionality to a Qwest DID capable central office.

DID is a special trunking arrangement that permits incoming calls from the exchange network to reach a specific PBX station directly without attendant assistance. DID service is offered with an analog or digital 2-way. If digital, the individual DSO's are 2-way trunks using advanced service that required DID ports. This product allows the Co-Provider to order DID numbers in blocks of 20. Provisioning of the DID feature requires that the Co-Provider subscribe to a sufficient number of trunk ports to adequately handle the volume of incoming calls.

Additional line or trunk features not offered with the basic DID/PBX product, are available to the Co-Provider on an individual case basis. A subsequent order charge will apply to add or change features.

Usage costs are not included in the cost of the DID/PBX Trunk Port. Further, non-recurring charges for the port, first trunk ordered and each additional trunk apply. In addition, recurring and non-recurring charges apply to each DID feature.

STUDY METHODOLOGY: RECURRING COSTS

The costs identified are direct costs that occur as a result of providing a DID/PBX trunk port service. As stated in section "B", above, the analysis studies the trunk termination costs to provide both analog and digital trunk terminations within the central office. The total analog and digital investments are identified separately. The investments are averaged together based relative demand for analog and digital trunks. Central office costs include digital serving wire center offices only.

Costs are included for the following cost components:

Multiplexing Costs: DID analog service requires a trunk side connection which requires DS0 to DS1 muxing to channelize the DS0 to the DS1 level. These investments are acquired from the DS1 Private Line Transport Service Cost Study. Investments associated with multiplexing equipment are acquired from QWEST Network Engineering.

Summary of Results

Main Distributing Frame Costs (MDF): The MDF portion of the central office costs include the equipment used in making the loop plant connections at the central office. Included in this cost are the "tip" or riser cables, a portion of the main distributing frame, connecting blocks, protectors, and miscellaneous wiring.

DSX-1 Costs: The Digital Signal Cross Connect (DSX) frame serves as a standard cross connect frame for digital facilities terminating on the trunk side of the switch. Equipment that terminates at the DSX includes D-type banks, Digital Cross Connect Systems, (DCS), digital switches, and digital multiplexers.

Digital Line Trunk Unit (DLTU) Costs: The DLTU provides a direct interface between DS1 facilities and the switch.

Functionality & Processing Costs: DID Functionality & Processing for DID Trunks is part of a business service available to customers with PBX type equipment. DID Functionality & Processing allows incoming calls on digital one-way, analog two-way, analog one-way, and two-way digital primary channels for ISDN from the network to be routed directly to the appropriate station number without the assistance of an attendant. This analysis studies the trunk functionality & processing associated with a DID trunk at the central office.

Cell: A44
Comment: Section D Local Usage
Local switching UNE consists of:
1) Terminating Interoffice end office switching for one office.
2) Non-Chargable Intercept which includes limited mechanical announcements informing callers of new numbers, referral numbers and/or line status.
3) Billing and Collections which provides the billing mechanism for QWest to charge Competitive Local Exchange Carriers for use of the Qwest local network.
4) AMA measurement equipment which stores information regarding each call that is required for billing purposes.
5) End office measurement investment

Cell: A45
mment: Tandem Switching UNE consists of:
1) This includes the usage sensitive cost of switching a call through a local tandem switch.
2) AMA measurement equipment which stores information regarding each call that is required for billing purposes.
3) Billing and Collections which provides the billing mechanism for Qwest to charge Competitive Local Exchange Carriers for use of the Qwest local network.

Cell: A46
Comment: Local switching LIS consists of:
1) Terminating Interoffice end office switching for one office.
2) Non-Chargable Intercept which includes limited mechanical announcements informing callers of new numbers, referral numbers and/or line status.
3) Billing and Collections which provides the billing mechanism for U S WEST to charge Competitive Local Exchange Carriers for use of the USWC local network.
4) Hewlett Packard measurement equipment which collects information regarding each call that is required for billing purposes.

Local Switching LIS does not include costs for SS7.

Cell: A47
Comment: Tandem Switching LIS consists of the usage sensitive cost of switching a call through a local tandem switch.

It does not inlude the cost of SS7.

Cell: A49
Comment: Tandem Switched Local Transport

Tandem Switched Local Transport provides the transmission path from the end office which originates a call through the local tandem switch to the end office which terminates the call. Tandem Switched Transport consists of two elements:

1) Fixed

This element identifies the usage sensitive costs associated with terminating interoffice facilities in end offices and tandem

switches. These termination costs are stated on a per minute of use basis for each of the mileage bands.

2) Distance Sensitive

The costs identified in this element are also usage sensitive and are associated with the outside plant facilities and intermediate multiplexing equipment which is required to connect central offices and tandem switches in the Qwest network. The costs are different by mileage bands as the costs vary by the distances between the offices. Costs are stated on a per minute of use per mile basis.

Cell: A59
Comment: Section E - Entrance Facility and Direct Trunk Transport
Description
DS1 and DS3 Entrance Facility provides for the communications path between the CLEC's Point of Interface (POI) and the Qwest Serving Wire Center (SWC) of that POI for the sole use of the CLEC. The Entrance Facility includes the fiber facility and supporting structure, transmission and terminating equipment at the serving wire center and the CLEC's POI.

DS1 and DS3 Direct Trunk Transport: Direct Trunk Transport (DTT) provides the transmission path without utilizing tandem switching functions on circuits dedicated to the use of a single CLEC between:

- the CLEC's SWC and an end office, or
- the CLEC's SWC and a local tandem, or
- the CLEC's SWC and a Qwest Hub where multiplexing functions are performed, or
- a Qwest Hub and an end office, or
- a Qwest Hub and a local tandem.

Direct Trunk Transport consists of two elements; fixed and per mile costs. The fixed element contains the costs associated with the terminating equipment at both ends of the transmission path. The per mile costs contain the costs associated with cable, repeaters, and intermediate central office equipment. The fixed are expressed per DS1 or DS3 circuit and the per mile costs are expressed per DS1 or DS3 circuit, per airline mile.

DS3 to DS1 Multiplexing: Central Office Multiplexing includes the equipment necessary for an arrangement that converts a DS3 channel to twenty-eight DS1 (1.544 Mbps) channels utilizing time division multiplexing.

DS1 to DS0 Multiplexing: Central Office Multiplexing includes the equipment necessary for an arrangement that converts a DS1 channel to twenty-four DS0 channels utilizing time division multiplexing.

Investment Development

DS1 and DS3 Entrance Facility investments are calculated using a Microsoft Excel spreadsheet based model called the NAC (Network Access Channel) model. The NAC model estimates the forward looking installed investment associated with DS1 and DS3 circuits between a SWC and a CLEC's POI.

DS1 and DS3 Direct Trunk Transport

The Interoffice Transport investments for DS1 and DS3 were calculated using the Transport Module (TM). TM calculates the weighted average installed investment required for transport over the Qwest interoffice network. A weighted average investment is obtained by weighting the investments for various forward looking interoffice facility configurations by a state specific probability of occurrence.

Multiplexing

The installed investments for the Central Office Multiplexing were calculated using an Excel spreadsheet based on the required equipment specified by Network Standard Configurations.

Qwest Cost Models Used

QwestICM
NAC
Transport Model

Cell: A90
Comment: Section G - 800 Database Service
DESCRIPTION OF SERVICE
800 Database Query Service is an originating service which provides for the forwarding of CLEC end-user-dialed 8XX-NXX-XXXX

calls to a toll carrier, based on the dialed 8XX number. When an 8XX call is originated by a CLEC end user, the CLEC Service Switching Point (SSP) will send an 8XX query to the Qwest 8XX Service Control Point (SCP) through the Qwest Signaling Transfer Point (STP). The Qwest SCP will perform the Carrier Identification Function based on the dialed digits to determine the toll carrier trunk group to which the call should be routed in accordance with the SMS/800 information residing in the Qwest SCP. The SCP will transmit the results of the Carrier Identification Function back to the CLEC SSP through the Qwest STP/Access Tandem. The results of the Carrier Identification Function will be the Carrier Identification Code (CIC) and/or the vertical feature(s) associated with the 8XX number. Call routing information in the SMS/800 reflects the desires of the owner of the 8XX number as entered in the SMS/800 by its chosen Responsible Organization (Resp. Org.).

Vertical Features:
In addition to the basic carrier identification function, 800Database Query Service subscribers may request vertical features through a Responsible Organization in accordance with the SMS/800 User Guide. Vertical features will be maintained within the Qwest SCP when technically feasible.

POTS Translation:
The POTS Translation vertical feature provides the option of having the ten-digit POTS number (i.e., NPA-NXX-XXXX) delivered instead of the 8XX dialed number (i.e., 1+8XX-XXXX) delivered to the service provider.

Call Handling and Destination Features:
Call Handling and Destination Features allow service subscriber's variable routing options by specifying a single carrier, multiple carriers (Exchange and/or Inter-exchange Carriers), single termination or multiple terminations.

STUDY METHODOLOGY
The hardware and software equipment costs were identified using the Switching Cost Model (SCM) Signaling System 7 (SS7) model. This model was developed to determine the economic costs of Qwest's Common Channel Signaling (CCS)/SS7 network. These economic costs are used to estimate the costs of services that use the SS7 network. One of these services is the InterLATA and IntraLATA 8XX Service. The term "cost" used in the model refers to initial cash outlays for hardware and software. Because software may be expensed, the term investment is not used. The model outputs expressed in terms of costs represent only the initial cash outlays. These outputs are the basis upon which the capital-related and operating expenses associated with these initial cash outlays are computed.

The SCM outputs were input to the TELRIC Cost Model. Factors were applied, including maintenance, ad valorem tax, administrative expense, common, business fees, power, sales tax, telco, interest during construction (IDC), land and building, sales expense, attributed costs and product management expense.

All costs, one time and recurring, were spread over the total levelized 8XX Database calls. The onetime costs are the 8XX Database Application Software and CRIS/CABS programming costs. The recurring costs include ISCP Expenses (Software On-site Installation and Support, Telegate Support per Year, Telecordia Software Support, IBM Software Mtce. Support, SMS/800 Management Team Billing).

Costs are developed for a "Basic Query", "POTS Translation" and "Call Handling".

Cell: A95
Comment: Section H - LIDB
DESCRIPTION
LIDB Query Service is a per query Switched Access Service. The query is assessed on all completed queries regardless of the output of the data. The query represents the transport from the Local Signaling Transfer Point (LSTP) to the Regional Signaling Transfer Point (RSTP) through the Message Relay Service (MRS) to the Service Control Point (SCP) and the actual retrieval of the data from the database. The query also is assessed on queries from the LSTP to the RSTP through the MRS then launched to another provider's SCP.

LIDB Query Service allows a CLEC to query QWEST's LIDB and secure the information to:
- Validate a calling card
- Automatically identify acceptance or rejection of collect or billed or third number calls, identify the billed number as a QWEST public or semi-public number, identify central office codes as vacant or active
- Identify originating screening profiles associated with working telephone numbers,
- Retrieve CLEC-defined data that the CLEC has stored in the QWEST LIDB

Thus, when a CLEC sends a Calling Card Verification query, a Billing Number Service query, an Originating Line Number Screening query or a GetData query to the QWEST SS7 network through the interconnection at the LSTP, the CLEC will be assessed a LIDB Query Service query charge.

STUDY METHODOLOGY

Summary of Results

The costs are those which result from providing LIDB Query Service. Included in the per query cost are the following:

1. LSTP hardware, LSTP software, LSTP to RSTP data link hardware and software, RSTP hardware, RSTP software, RSTP to MRS SCP data link hardware and software, RSTP to LIDB SCP data link hardware and software, LIDB SCP hardware and software, MRS SCP hardware and software.

2. Database costs and associated labor.

Cell: A98
Comment: Section I - SIGNALING
DESCRIPTION
SS7 Signaling provides a means for transporting signaling information across our network. The following message types were studied:

Signal formulation is the capability of a Common Channel Signaling (CCS) end office or tandem switch to create or decode a CCS message. The ISUP Signal Formulation rate element recovers the costs associated with the formulation of call-related signaling messages for call setup, Integrated Services Digital Network (ISDN) User Part (ISUP), on a per signal message basis. ISUP message length and content specifications are described in CCS/Signaling System 7 protocol.

Signal transport is the capability of the Common Channel Signaling (CCS) data links to carry a signaling message from one signaling network element to another. The ISUP and TCAP Signal Transport rate elements recover the costs associated with the transmission of signaling data between the local Signal Transfer Point (STP) and the Service Switching Point (SSP) end office on a per signal message basis.

Signal switching is the capability performed by the STP to route a signal message to its proper destination. The ISUP and TCAP Signal Switching rate elements recover the costs associated with switching and routing ISUP and TCAP signaling messages at the local and regional STP on a per signal message basis.

STUDY METHODOLOGY
This study uses the SS7 model to identify the investment and expenses associated with SS7 Signaling. The model identifies the type and amount of hardware and/or software required for each component. Appropriate factors are then applied to convert the per octet or millisecond investments from SCM to per signaled message investments and to convert busy season busy hour investments to annualized per unit investments.

This study also includes the costs associated with measuring and billing the Signaling Unbundled Network Elements (UNE). Investment and direct expense costs of the CROSS7/AMAT7 systems are a part of each UNE signaling rate element cost per signaled message.

Cell: A104
Comment: The STP Port is the customer dedicated point of termination to the signal switching capability of the STP. Each STP port requires an STP link.

The STP port costs were developed from vendor purchase prices. Monthly costs relative to these investments were developed through the use of the STP Port Model, v1.1.xls spreadsheet.

Cell: A106
Comment: Section J - Shared Transport
DESCRIPTION OF SERVICES
Shared Transport is defined as the Co-Provider use of capacity on the U S WEST interoffice message trunk network and central office routing tables for the delivery of switched, voice grade traffic between USW end offices and tandem switches within the local calling area.

Shared Transport is only provided with Unbundled Local Switch Port elements. The existing routing tables resident in the switch will direct both U S WEST and Co-Provider traffic over U S WEST interoffice message trunk network. The Co-Provider may custom route operator services and directory assistance calls to unique trunks. The Co-Provider may not mix unbundled dedicated interoffice message trunk transport and shared transport in the same local calling area.

STUDY METHODOLOGY
This study uses the U S WEST Transport Module (TM) and Switching Module (SM) to calculate the investments associated with transporting calls over the U S WEST interoffice network. The output workbook converts TM and SM outputs to monthly equivalent investments using monthly traffic and mileage data. These investments are in turn converted to monthly costs using the factors

calculated by the Expense Factors Module and Capital Costs Module.

STUDY ASSUMPTIONS

a. Costs are based on a least cost scorched node scenario and represent the cost of fully replacing the network required to provision the service, beginning from the existing grid of network nodes used by U S WEST today.
b. Costs do not reflect the emergence of widespread competition in the local exchange market.
c. All network investments are forward-looking:
i. Switching and transport equipment and facilities are digital.
ii. SONET is the forward looking technology in the interoffice network.
d. Standby capacity is a volume-sensitive cost. Non-volume sensitive spare switching capacity (e.g., modular spare) is a shared cost. Please refer to documentation for the Switching Module for further explanation.

Cell: A110
Comment: Section K - UDIT/EEL
Unbundled Dedicated Interoffice Transport (UDIT) provides the CLEC with a network element of a single transmission path between USW Wire Centers in the same LATA and state. UDIT is a bandwidth-specific interoffice transmission path designed to a DSX panel (or equivalent) in each Qwest Wire Center. The CLEC must have collocation in the USW serving wire center and have requested termination capacity through the collocation process. UDIT is available in DS0, DS1, DS3, OC-3, OC-12 and OC-48 where facilities are available. UDIT is distance sensitive and is for the sole use of the CLEC. The CLEC can assign channels and transport its choice of voice or data. UDIT is a point-to-point transmission path and not a self healing product.

UDIT consists of two elements; fixed and per mile costs. The fixed element contains the costs associated with the terminating equipment at both ends of the transmission path. The per mile costs contain the costs associated with cable, repeaters, and intermediate central office equipment. The fixed are expressed per DS0, DS1, DS3, OC-3, OC-12 or OC-48 circuit and the per mile costs are expressed per DS0, DS1, DS3, OC-3, OC-12 or OC-48 circuit, per airline mile.

The costs of DS0, DS1, DS3, OC3, OC12 or OC48 EEL are equivalent to the costs of the corresponding UDIT.

Investment Development

The Interoffice Transport investments for DS0, DS1, DS3, OC-3, OC-12 and OC-48 were calculated using the Transport Module (TM). TM calculates the weighted average installed investment required for transport over the Qwest interoffice network. A weighted average investment is obtained by weighting the investments for various forward looking interoffice facility configurations by a state specific probability of occurrence.

Cell: A111
Comment: DS3 to DS1 Multiplexing: Central Office Multiplexing includes the equipment necessary for an arrangement that converts a DS3 channel to twenty-eight DS1 (1.544 Mbps) channels utilizing time division multiplexing.

DS1 to DS0 Multiplexing: Central Office Multiplexing includes the equipment necessary for an arrangement that converts a DS1 channel to twenty-four DS0 channels utilizing time division multiplexing.

The multiplexing costs are aqual to the multiplexing costs provided in this study for Direct Trunked Transport.

Cell: A175
Comment: E-UDIT:
Extended Unbundled Dedicated Interoffice Transport (EUDIT) provides the CLEC with a bandwidth specific transmission path between the Qwest Serving Wire Center to the CLEC's wire center or an IXC's point of presence located within the same Qwest Serving Wire Center area. EUDIT is available in DS0, DS1, DS3, OC-3, OC-12, and OC-48 bandwidths where facilities are available. CLEC can assign channels and transport its choice of voice or data. Specifications, interfaces and parameters are described in Qwest Technical Publication 77389.

EUDIT investments are calculated using a Microsoft Excel spreadsheet based model called the NAC (Network Access Channel) model. The NAC model estimates the forward looking installed investment associated with circuits between a SWC and a CLEC's POI.

Section A - Unbundled Loop
Loop - Dev Total Prod Costs 2W

Row	Qwest Default Values 5/30/02 9:43:47 AM South Dakota	Source or Calculation	Factor Value [AP p1 cB]	Statewide Average Total Loop 2-Wire	Feeder 2-Wire	Distribution 2-Wire	Unbundled Loop Grooming 2-Wire	Network Interface Device 2-Wire	Wire Center Zone 1 Total Loop 2-Wire	Feeder 2-Wire	Distribution 2-Wire
			A	B	C	D	F	E	F	G	H
1	**Investment**	Investment Cost(Loop+ Billing		1349.93	690.55	659.39	72.60	42.37	707.04	284.87	422.17
2		+ 2W grooming) cD									
3	Investment Based Costs (IBC)	" cJ		21.53	10.09	11.45	1.12	0.73	11.37	4.10	7.27
4	Element Specific Expenses	sA p18 E7		0.0165	0.0165	0.0165	0.0165	0.0165	0.0165	0.0165	0.0165
5	***Total IBC + Element Specific Expenses***	*r3 + r4*		21.55	10.10	11.46	1.14	0.75	11.38	4.12	7.28
6											
7	***Marketing & Business Fees***										
8	Product Management Expense	cA*r5	0.01996	0.4301	0.2016	0.2288	0.0227	0.0149	0.4301	0.2016	0.2288
9	Sales Expense	cA*r5	0.01188	0.2559	0.1200	0.1361	0.0135	0.0089	0.2559	0.1200	0.1361
10	Product Advertising Expense	cA*r5	0.00000	0.0000	0.0000	0.0000	0.0000	0.0000	0.0000	0.0000	0.0000
11	Business Fees (Other Operating Taxes)	cA*(r5+r8:r10)	0.00148	0.0330	0.0155	0.0175	0.0017	0.0011	0.0330	0.0155	0.0175
12	***Marketing & Business Fees Total***	*Sum r8:r11*		0.7190	0.3371	0.3825	0.0380	0.0249	0.7190	0.3371	0.3825
13											
14	***Sub-Total Expenses***	*r5 + r12*		22.27	10.44	11.85	1.18	0.77	12.10	4.45	7.67
15											
16	***Other Direct Expenses***										
17	Network Operations	cA*r14	0.03483	0.7756	0.3636	0.4126	0.0410	0.0269	0.7756	0.3636	0.4126
18	Network Support Assets	cA*r14	0.01470	0.3274	0.1535	0.1742	0.0173	0.0114	0.3274	0.1535	0.1742
19	General Support Assets	cA*r14	0.08874	1.9761	0.9265	1.0512	0.1044	0.0685	1.9761	0.9265	1.0512
20	General Purpose Computers	cA*r14	0.04334	0.9652	0.4525	0.5134	0.0510	0.0335	0.9652	0.4525	0.5134
21	Uncollectible - Interconnect	cA*r14	0.00379	0.0843	0.0395	0.0448	0.0045	0.0029	0.0843	0.0395	0.0448
22	Accounting and Finance Expense	cA*r14	0.00735	0.1636	0.0767	0.0870	0.0086	0.0057	0.1636	0.0767	0.0870
23	Human Resources Expense	cA*r14	0.00829	0.1847	0.0866	0.0982	0.0098	0.0064	0.1847	0.0866	0.0982
24	Information Management Expense	cA*r14	0.07089	1.5785	0.7400	0.8397	0.0834	0.0548	1.5785	0.7400	0.8397
25	Intangibles	cA*r14	0.00000	0.0000	0.0000	0.0000	0.0000	0.0000	0.0000	0.0000	0.0000
26	***Total Other Direct Expenses***	*Sum r17:r25*		6.0555	2.8389	3.2212	0.3200	0.2100	6.0555	2.8389	3.2212
27											
28	***Total Element Long Run Incremental Costs***	*r 14 + r26*		28.32	13.28	15.07	1.50	0.98	18.16	7.29	10.89
29											
30	***Common***										
31	Executive Expense	cA*r28	0.01127	0.3191	0.1496	0.1698	0.0169	0.0111	0.3191	0.1496	0.1698
32	Planning Expense	cA*r28	0.00053	0.0149	0.0070	0.0079	0.0008	0.0005	0.0149	0.0070	0.0079
33	External Relations Expense	cA*r28	0.03785	1.0719	0.5025	0.5702	0.0566	0.0372	1.0719	0.5025	0.5702
34	Legal Expense	cA*r28	0.00472	0.1336	0.0626	0.0711	0.0071	0.0046	0.1336	0.0626	0.0711
35	Other Procurement Expense	cA*r28	0.00186	0.0527	0.0247	0.0280	0.0028	0.0018	0.0527	0.0247	0.0280
36	Research and Development Expense	cA*r28	0.00001	0.0002	0.0001	0.0001	0.0000	0.0000	0.0002	0.0001	0.0001
37	Other General and Admin Exp	cA*r28	0.01506	0.4267	0.2000	0.2270	0.0225	0.0148	0.4267	0.2000	0.2270
38	***Total Common Costs***	*Sum r31:r37*		2.0191	0.9466	1.0740	0.1067	0.0700	2.0191	0.9466	1.0740
39											
40	***TELRIC + Common***	*r27 + r38*		**30.34**	**14.23**	**16.14**	**1.60**	**1.05**	**20.18**	**8.24**	**11.96**

c = column, r = row, s = section, p = page, AP = Appendix

Section A - Unbundled Loop
Loop - Dev Total Prod Costs 2W

Row	Qwest Default Values 5/30/02 9:43:47 AM South Dakota	Source or Calculation	Factor Value [AP p1 cB]	Wire Center Zone 2 Total Loop 2-Wire	Feeder 2-Wire	Distribution 2-Wire	Wire Center Zone 3 Total Loop 2-Wire	Feeder 2-Wire	Distribution 2-Wire
			A	I	J	K	L	M	N
1	**Investment**	Investment Cost(Loop+ Billing		1297.83	558.09	739.74	1848.70	1045.29	803.41
2		+ 2W grooming) cD							
3	Investment Based Costs (IBC)	" cJ		20.91	8.10	12.81	29.34	15.33	14.01
4	Element Specific Expenses	sA p18 E7		0.0165	0.0165	0.0165	0.0165	0.0165	0.0165
5	***Total IBC + Element Specific Expenses***	*r3 + r4*		20.93	8.12	12.83	29.35	15.35	14.02
6									
7	***Marketing & Business Fees***								
8	Product Management Expense	cA*r5	0.01996	0.4301	0.2016	0.2288	0.4301	0.2016	0.2288
9	Sales Expense	cA*r5	0.01188	0.2559	0.1200	0.1361	0.2559	0.1200	0.1361
10	Product Advertising Expense	cA*r5	0.00000	0.0000	0.0000	0.0000	0.0000	0.0000	0.0000
11	Business Fees (Other Operating Taxes)	cA*(r5+r8:r10)	0.00148	0.0330	0.0155	0.0175	0.0330	0.0155	0.0175
12	***Marketing & Business Fees Total***	*Sum r8:r11*		0.7190	0.3371	0.3825	0.7190	0.3371	0.3825
13									
14	***Sub-Total Expenses***	*r5 + r12*		21.65	8.46	13.21	30.07	15.69	14.40
15									
16	***Other Direct Expenses***								
17	Network Operations	cA*r14	0.03483	0.7756	0.3636	0.4126	0.7756	0.3636	0.4126
18	Network Support Assets	cA*r14	0.01470	0.3274	0.1535	0.1742	0.3274	0.1535	0.1742
19	General Support Assets	cA*r14	0.08874	1.9761	0.9265	1.0512	1.9761	0.9265	1.0512
20	General Purpose Computers	cA*r14	0.04334	0.9652	0.4525	0.5134	0.9652	0.4525	0.5134
21	Uncollectible - Interconnect	cA*r14	0.00379	0.0843	0.0395	0.0448	0.0843	0.0395	0.0448
22	Accounting and Finance Expense	cA*r14	0.00735	0.1636	0.0767	0.0870	0.1636	0.0767	0.0870
23	Human Resources Expense	cA*r14	0.00829	0.1847	0.0866	0.0982	0.1847	0.0866	0.0982
24	Information Management Expense	cA*r14	0.07089	1.5785	0.7400	0.8397	1.5785	0.7400	0.8397
25	Intangibles	cA*r14	0.00000	0.0000	0.0000	0.0000	0.0000	0.0000	0.0000
26	***Total Other Direct Expenses***	*Sum r17:r25*		6.0555	2.8389	3.2212	6.0555	2.8389	3.2212
27									
28	***Total Element Long Run Incremental Costs***	*r 14 + r26*		27.70	11.30	16.43	36.13	18.53	17.63
29									
30	***Common***								
31	Executive Expense	cA*r28	0.01127	0.3191	0.1496	0.1698	0.3191	0.1496	0.1698
32	Planning Expense	cA*r28	0.00053	0.0149	0.0070	0.0079	0.0149	0.0070	0.0079
33	External Relations Expense	cA*r28	0.03785	1.0719	0.5025	0.5702	1.0719	0.5025	0.5702
34	Legal Expense	cA*r28	0.00472	0.1336	0.0626	0.0711	0.1336	0.0626	0.0711
35	Other Procurement Expense	cA*r28	0.00186	0.0527	0.0247	0.0280	0.0527	0.0247	0.0280
36	Research and Development Expense	cA*r28	0.00001	0.0002	0.0001	0.0001	0.0002	0.0001	0.0001
37	Other General and Admin Exp	cA*r28	0.01506	0.4267	0.2000	0.2270	0.4267	0.2000	0.2270
38	***Total Common Costs***	*Sum r31:r37*		2.0191	0.9466	1.0740	2.0191	0.9466	1.0740
39									
40	***TELRIC + Common***	*r27 + r38*		**29.72**	**12.24**	**17.50**	**38.15**	**19.47**	**18.70**

c = column, r = row, s = section, p = page, AP = Appendix

Section A - U ndled Loop
Loop - Dev Total Prod Costs 4W

Row	Qwest Default Values 5/30/02 9:43:47 AM South Dakota	Source or Calculation	Factor Value [AP p1 cB]	Statewide Average Total Loop 4-Wire	Feeder 4-Wire	Distribution 4-Wire	Unbundled Loop Grooming 4-Wire	Network Interface Device 4-Wire	Wire Cente Total Loop 4-Wire	Feeder 4-Wire
			A	B	C	D	F	E	F	G
1	**Investment**	Investment Cost(2*Loop+ Billing		2699.87	1381.09	1318.78	172.00	84.74	1414.07	569.74
2		+ 4W grooming) cD								
3	Investment Based Costs (IBC)	" cJ		43.07	20.17	22.89	2.66	1.46	22.73	8.20
4	Element Specific Expenses	sA p18 E7		0.0165	0.0165	0.0165	0.0165	0.0165	0.0165	0.0165
5	***Total IBC + Element Specific Expenses***	*r3 + r4*		43.08	20.19	22.91	2.68	1.48	22.75	8.21
6										
7	***Marketing & Business Fees***									
8	Product Management Expense	cA*r5	0.01996	0.8598	0.4029	0.4572	0.0534	0.0295	0.8598	0.4029
9	Sales Expense	cA*r5	0.01188	0.5117	0.2398	0.2721	0.0318	0.0176	0.5117	0.2398
10	Product Advertising Expense	cA*r5	0.00000	0.0000	0.0000	0.0000	0.0000	0.0000	0.0000	0.0000
11	Business Fees (Other Operating Taxes)	cA*(r5+r8:r10)	0.00148	0.0659	0.0309	0.0351	0.0041	0.0023	0.0659	0.0309
12	***Marketing & Business Fees Total***	*Sum r8:r11*		1.4374	0.6736	0.7644	0.0893	0.0493	1.4374	0.6736
13										
14	***Sub-Total Expenses***	*r5 + r12*		44.52	20.86	23.67	2.76	1.53	24.19	8.89
15										
16	***Other Direct Expenses***									
17	Network Operations	cA*r14	0.03483	1.5507	0.7267	0.8246	0.0963	0.0532	1.5507	0.7267
18	Network Support Assets	cA*r14	0.01470	0.6546	0.3068	0.3481	0.0406	0.0225	0.6546	0.3068
19	General Support Assets	cA*r14	0.08874	3.9508	1.8514	2.1009	0.2453	0.1356	3.9508	1.8514
20	General Purpose Computers	cA*r14	0.04334	1.9296	0.9042	1.0261	0.1198	0.0662	1.9296	0.9042
21	Uncollectible - Interconnect	cA*r14	0.00379	0.1685	0.0790	0.0896	0.0105	0.0058	0.1685	0.0790
22	Accounting and Finance Expense	cA*r14	0.00735	0.3270	0.1533	0.1739	0.0203	0.0112	0.3270	0.1533
23	Human Resources Expense	cA*r14	0.00829	0.3692	0.1730	0.1963	0.0229	0.0127	0.3692	0.1730
24	Information Management Expense	cA*r14	0.07089	3.1558	1.4789	1.6782	0.1960	0.1083	3.1558	1.4789
25	Intangibles	cA*r14	0.00000	0.0000	0.0000	0.0000	0.0000	0.0000	0.0000	0.0000
26	***Total Other Direct Expenses***	*Sum r17:r25*		12.1063	5.6732	6.4377	0.7517	0.4154	12.1063	5.6732
27										
28	***Total Element Long Run Incremental Costs***	*r 14 + r26*		56.63	26.54	30.11	3.52	1.94	36.29	14.56
29										
30	***Common***									
31	Executive Expense	cA*r28	0.01127	0.6380	0.2990	0.3393	0.0396	0.0219	0.6380	0.2990
32	Planning Expense	cA*r28	0.00053	0.0297	0.0139	0.0158	0.0018	0.0010	0.0297	0.0139
33	External Relations Expense	cA*r28	0.03785	2.1431	1.0043	1.1396	0.1331	0.0735	2.1431	1.0043
34	Legal Expense	cA*r28	0.00472	0.2671	0.1252	0.1420	0.0166	0.0092	0.2671	0.1252
35	Other Procurement Expense	cA*r28	0.00186	0.1053	0.0493	0.0560	0.0065	0.0036	0.1053	0.0493
36	Research and Development Expense	cA*r28	0.00001	0.0003	0.0002	0.0002	0.0000	0.0000	0.0003	0.0002
37	Other General and Admin Exp	cA*r28	0.01506	0.8530	0.3997	0.4536	0.0530	0.0293	0.8530	0.3997
38	***Total Common Costs***	*Sum r31:r37*		4.0366	1.8916	2.1465	0.2506	0.1385	4.0366	1.8916
39										
40	***TELRIC + Common***	*r27 + r38*		**60.66**	**28.43**	**32.26**	**3.77**	**2.08**	**40.33**	**16.45**

c = column, r = row, s = section, p = page, AP = Appendix

Section A - U. ndled Loop
Loop - Dev Total Prod Costs 4W

Row	Qwest Default Values 5/30/02 9:43:47 AM South Dakota	Source or Calculation	Factor Value [AP p1 cB]	r Zone 1 Distribution 4-Wire
			A	H
1	**Investment**	Investment Cost(2*Loop+ Billing		844.34
2		+ 4W grooming) cD		
3	Investment Based Costs (IBC)	* cJ		14.53
4	Element Specific Expenses	sA p18 E7		0.0165
5	***Total IBC + Element Specific Expenses***	***r3 + r4***		14.55
6				
7	***Marketing & Business Fees***			
8	Product Management Expense	cA*r5	0.01996	0.4572
9	Sales Expense	cA*r5	0.01188	0.2721
10	Product Advertising Expense	cA*r5	0.00000	0.0000
11	Business Fees (Other Operating Taxes)	cA*(r5+r8:r10)	0.00148	0.0351
12	***Marketing & Business Fees Total***	***Sum r8:r11***		0.7644
13				
14	***Sub-Total Expenses***	***r5 + r12***		15.31
15				
16	***Other Direct Expenses***			
17	Network Operations	cA*r14	0.03483	0.8246
18	Network Support Assets	cA*r14	0.01470	0.3481
19	General Support Assets	cA*r14	0.08874	2.1009
20	General Purpose Computers	cA*r14	0.04334	1.0261
21	Uncollectible - Interconnect	cA*r14	0.00379	0.0896
22	Accounting and Finance Expense	cA*r14	0.00735	0.1739
23	Human Resources Expense	cA*r14	0.00829	0.1963
24	Information Management Expense	cA*r14	0.07089	1.6782
25	Intangibles	cA*r14	0.00000	0.0000
26	***Total Other Direct Expenses***	***Sum r17:r25***		6.4377
27				
28	***Total Element Long Run Incremental Costs***	***r 14 + r26***		21.75
29				
30	***Common***			
31	Executive Expense	cA*r28	0.01127	0.3393
32	Planning Expense	cA*r28	0.00053	0.0158
33	External Relations Expense	cA*r28	0.03785	1.1396
34	Legal Expense	cA*r28	0.00472	0.1420
35	Other Procurement Expense	cA*r28	0.00186	0.0560
36	Research and Development Expense	cA*r28	0.00001	0.0002
37	Other General and Admin Exp	cA*r28	0.01506	0.4536
38	***Total Common Costs***	***Sum r31:r37***		2.1465
39				
40	***TELRIC + Common***	***r27 + r38***		**23.90**

c = column, r = row, s = section, p = page, AP = Appendix

Section A - U...ndled Loop
Loop - Dev Total Prod Costs 4W

Row	Qwest Default Values 5/30/02 9:43:47 AM South Dakota	Source or Calculation	Factor Value [AP p1 cB]	Wire Center Zone 2 Total Loop 4-Wire	Wire Center Zone 2 Feeder 4-Wire	Wire Center Zone 2 Distribution 4-Wire	Wire Center Zone 3 Total Loop 4-Wire	Wire Center Zone 3 Feeder 4-Wire	Wire Center Zone 3 Distribution 4-Wire
			A	I	J	K	L	M	N
1	**Investment**	Investment Cost(2*Loop+ Billing		2595.66	1116.19	1479.48	3697.41	2090.58	1606.83
2		+ 4W grooming) cD							
3	Investment Based Costs (IBC)	" cJ		41.83	16.21	25.62	58.68	30.67	28.01
4	Element Specific Expenses	sA p18 E7		0.0165	0.0165	0.0165	0.0165	0.0165	0.0165
5	***Total IBC + Element Specific Expenses***	*r3 + r4*		41.84	16.22	25.64	58.69	30.68	28.03
6									
7	***Marketing & Business Fees***								
8	Product Management Expense	cA*r5	0.01996	0.8598	0.4029	0.4572	0.8598	0.4029	0.4572
9	Sales Expense	cA*r5	0.01188	0.5117	0.2398	0.2721	0.5117	0.2398	0.2721
10	Product Advertising Expense	cA*r5	0.00000	0.0000	0.0000	0.0000	0.0000	0.0000	0.0000
11	Business Fees (Other Operating Taxes)	cA*(r5+r8:r10)	0.00148	0.0659	0.0309	0.0351	0.0659	0.0309	0.0351
12	***Marketing & Business Fees Total***	*Sum r8:r11*		1.4374	0.6736	0.7644	1.4374	0.6736	0.7644
13									
14	***Sub-Total Expenses***	*r5 + r12*		43.28	16.90	26.40	60.13	31.36	28.79
15									
16	***Other Direct Expenses***								
17	Network Operations	cA*r14	0.03483	1.5507	0.7267	0.8246	1.5507	0.7267	0.8246
18	Network Support Assets	cA*r14	0.01470	0.6546	0.3068	0.3481	0.6546	0.3068	0.3481
19	General Support Assets	cA*r14	0.08874	3.9508	1.8514	2.1009	3.9508	1.8514	2.1009
20	General Purpose Computers	cA*r14	0.04334	1.9296	0.9042	1.0261	1.9296	0.9042	1.0261
21	Uncollectible - Interconnect	cA*r14	0.00379	0.1685	0.0790	0.0896	0.1685	0.0790	0.0896
22	Accounting and Finance Expense	cA*r14	0.00735	0.3270	0.1533	0.1739	0.3270	0.1533	0.1739
23	Human Resources Expense	cA*r14	0.00829	0.3692	0.1730	0.1963	0.3692	0.1730	0.1963
24	Information Management Expense	cA*r14	0.07089	3.1558	1.4789	1.6782	3.1558	1.4789	1.6782
25	Intangibles	cA*r14	0.00000	0.0000	0.0000	0.0000	0.0000	0.0000	0.0000
26	***Total Other Direct Expenses***	*Sum r17:r25*		12.1063	5.6732	6.4377	12.1063	5.6732	6.4377
27									
28	***Total Element Long Run Incremental Costs***	*r 14 + r26*		55.39	22.57	32.84	72.24	37.03	35.23
29									
30	***Common***								
31	Executive Expense	cA*r28	0.01127	0.6380	0.2990	0.3393	0.6380	0.2990	0.3393
32	Planning Expense	cA*r28	0.00053	0.0297	0.0139	0.0158	0.0297	0.0139	0.0158
33	External Relations Expense	cA*r28	0.03785	2.1431	1.0043	1.1396	2.1431	1.0043	1.1396
34	Legal Expense	cA*r28	0.00472	0.2671	0.1252	0.1420	0.2671	0.1252	0.1420
35	Other Procurement Expense	cA*r28	0.00186	0.1053	0.0493	0.0560	0.1053	0.0493	0.0560
36	Research and Development Expense	cA*r28	0.00001	0.0003	0.0002	0.0002	0.0003	0.0002	0.0002
37	Other General and Admin Exp	cA*r28	0.01506	0.8530	0.3997	0.4536	0.8530	0.3997	0.4536
38	***Total Common Costs***	*Sum r31:r37*		4.0366	1.8916	2.1465	4.0366	1.8916	2.1465
39									
40	***TELRIC + Common***	*r27 + r38*		**59.42**	**24.46**	**34.99**	**76.27**	**38.92**	**37.38**

c = column, r = row, s = section, p = page, AP = Appendix

	A	B	C	D	E	F	G	H	I	J
1	Qwest Default Values 5/30/02 9:43:47 AM									
2	South Dakota					Average Unbundled Loop				
3	Acct	FRC	Account Name	Investment	Depreciation	Cost of Money	Income Tax	Ad Valorem	Maintenance	Total Capital Costs
4	**Total Loop (2 wire)**				cD*(AP p7 cA)/12	cD*(AP p7 cB)/12	cD*(AP p7 cC)/12	cD*(AP p7 cD)/12	cD*(AP p7 cE)/12	sum(cE:cI)
5	2111	20C	Land	0.93	0.0000000	0.0074998	0.0028362	0.0007419	0.0009924	0.0120703
6	2121	110C	Building	49.93	0.1074464	0.3115466	0.1178156	0.0397245	0.0531402	0.6296733
7	2212	377C	Digital Switch	27.71	0.2514920	0.1049396	0.0396843	0.0220441	0.0231327	0.4412926
8	2232.2	257C	Pair Gain—Digital	222.17	2.0313489	0.8415626	0.3182484	0.1767445	0.1949323	3.5628368
9	2411	1C	Poles	16.09	0.1643030	0.0494539	0.0187017	0.0127965	0.0039488	0.2492038
10	2421.11,.21	52C	Aerial Cbl Metallic	27.73	0.2431441	0.1256763	0.0475262	0.0220638	0.2567207	0.6951311
11	2421.11	42C	Aerial Drop	12.69	0.1112891	0.0575231	0.0217532	0.0100988	0.1175032	0.3181674
12	2422.11,.21	5C	UG Cbl Metallic	41.37	0.3136771	0.1937578	0.0732722	0.0329109	0.1055463	0.7191643
13	2422.12,.22	85C	UG Cbl Nonmetallic	5.81	0.0342404	0.0273749	0.0103522	0.0046206	0.0091484	0.0857365
14	2423.11,.21	45C	Buried Cbl Metallic	512.61	2.6016083	2.4374471	0.9217539	0.4077972	2.2479109	8.6165175
15	2423.11	35C	Buried Drop	80.17	0.4068844	0.3812101	0.1441598	0.0637784	0.3515671	1.3475998
16	2423.12,.22	845C	Buried Cbl Nonmetallic	256.31	1.3008181	1.2187366	0.4608819	0.2039008	0.4928583	3.6771957
17	2426.1	62C	Intrabuilding Cbl., Exch., Metallic	13.14	0.0686251	0.0638957	0.0241630	0.0104498	0.0384423	0.2055759
18	2431	3C	Aerial Wire	3.50	0.0799641	0.0267586	0.0101191	0.0027860	0.0071452	0.1267730
19	2441	4C	Conduit System	79.76	0.1425268	0.4293822	0.1623767	0.0634523	0.0481333	0.8458713
20			**Total**	**1349.93**	**7.86**	**6.28**	**2.37**	**1.07**	**3.95**	**$ 21.53**
21	**Feeder (2 wire)**									
22	2111	20C	Land	0.93	0.0000000	0.0074998	0.0028362	0.0007419	0.0009924	0.0120703
23	2121	110C	Building	49.93	0.1074464	0.3115466	0.1178156	0.0397245	0.0531402	0.6296733
24	2212	377C	Digital Switch	27.71	0.2514920	0.1049396	0.0396843	0.0220441	0.0231327	0.4412926
25	2232.2	257C	Pair Gain—Digital	222.17	2.0313489	0.8415626	0.3182484	0.1767445	0.1949323	3.5628368
26	2411	1C	Poles	0.32	0.0033146	0.0009977	0.0003773	0.0002582	0.0000797	0.0050273
27	2421.11,.21	52C	Aerial Cbl Metallic	0.63	0.0055244	0.0028555	0.0010798	0.0005013	0.0058329	0.0157940
28	2422.11,.21	5C	UG Cbl Metallic	37.19	0.2819942	0.1741873	0.0658713	0.0295868	0.0948857	0.6465253
29	2422.12,.22	85C	UG Cbl Nonmetallic	5.81	0.0342404	0.0273749	0.0103522	0.0046206	0.0091484	0.0857365
30	2423.11,.21	45C	Buried Cbl Metallic	9.77	0.0495914	0.0464622	0.0175703	0.0077734	0.0428493	0.1642466
31	2423.12,.22	845C	Buried Cbl Nonmetallic	256.31	1.3008181	1.2187366	0.4608819	0.2039008	0.4928583	3.6771957
32	2441	4C	Conduit System	79.76	0.1425268	0.4293822	0.1623767	0.0634523	0.0481333	0.8458713
33			**Total**	**690.55**	**4.21**	**3.17**	**1.20**	**0.55**	**0.97**	**$ 10.09**
34	**Distribution (2 wire)**									
35	2411	1C	Poles	15.76	0.1609884	0.0484562	0.0183244	0.0125383	0.0038692	0.2441765
36	2421.11,.21	52C	Aerial Cbl Metallic	27.10	0.2376197	0.1228209	0.0464464	0.0215625	0.2508878	0.6793371
37	2421.11	42C	Aerial Drop	12.69	0.1112891	0.0575231	0.0217532	0.0100988	0.1175032	0.3181674
38	2422.11,.21	5C	UG Cbl Metallic	4.18	0.0316829	0.0195705	0.0074008	0.0033242	0.0106607	0.0726390
39	2423.11,.21	45C	Buried Cbl Metallic	502.84	2.5520169	2.3909849	0.9041836	0.4000239	2.2050616	8.4522709
40	2423.11	35C	Buried Drop	80.17	0.4068844	0.3812101	0.1441598	0.0637784	0.3515671	1.3475998
41	2426.1	62C	Intrabuilding Cbl., Exch., Metallic	13.14	0.0686251	0.0638957	0.0241630	0.0104498	0.0384423	0.2055759
42	2431	3C	Aerial Wire	3.50	0.0799641	0.0267586	0.0101191	0.0027860	0.0071452	0.1267730
43			**Total**	**659.39**	**3.65**	**3.11**	**1.18**	**0.52**	**2.99**	**$ 11.45**
44	**Loop Grooming 2W**									
45	2111	20C	Land	0.23	0.0000000	0.0018104	0.0006846	0.0001791	0.0002396	0.0029137
46	2121	110C	Building	12.05	0.0259366	0.0752045	0.0284396	0.0095891	0.0128276	0.1519973
47	2232.3	257C	Pair Gain—Digital (Loop Grooming)	60.32	0.5515065	0.2284823	0.0864037	0.0479857	0.0529237	0.9673019
48			**Total**	**72.60**	**0.58**	**0.31**	**0.12**	**0.06**	**0.07**	**$ 1.12**
49	**Loop Grooming 4W**									
50	2111	20C	Land	0.53	0.0000000	0.0042891	0.0016220	0.0004243	0.0005676	0.0069029
51	2121	110C	Building	28.56	0.0614475	0.1781703	0.0673775	0.0227180	0.0303903	0.3601036
52	2232.3	257C	Pair Gain—Digital (Loop Grooming)	142.91	1.3065988	0.5413077	0.2047029	0.1136851	0.1253839	2.2916784
53			**Total**	**172.00**	**1.37**	**0.72**	**0.27**	**0.14**	**0.16**	**$ 2.66**
54	**Billing**									
55	2124	361C	General Purpose Comp. (Billing)	**0.0001123**	**0.0000015**	**0.0000004**	**0.0000002**	**0.0000001**	**0.0000000**	**0.0000022**
56	**Network Interface Device (2 wire)**									
57	2421.11	42C	Aerial Drop	4.09	0.0358470	0.0185286	0.0070068	0.0032529	0.0378486	0.1024840
58	2423.11	35C	Buried Drop	25.33	0.1285675	0.1204549	0.0455517	0.0201527	0.1110884	0.4258153
59	2426.1	62C	Intrabuilding Cbl., Exch., Metallic	12.95	0.0676589	0.0629960	0.0238228	0.0103026	0.0379010	0.2026814
60			**Total**	**42.37**	**0.23**	**0.20**	**0.08**	**0.03**	**0.19**	**$ 0.73**
61	**Investment Sources**									
62	Land = (AP p12 B10) * (377C + 57C+257C+257CS+357C+357CS)					Building = (AP p12 C10) *(377C+57C+257C+257CS+357C+357CS)				
63	Unbundled Loop = sA p9 cD-I							Billing = AP p10 F21		

Section A - U[illegible]ndled Loop
Loop Zone 1- In[illegible]ment Cost 2W

	A	B	C	D	E	F	G	H	I	J
1	Qwest Default Values 5/30/02 9:43:47 AM									
2	South Dakota				**Wire Center Zone 1 Unbundled Loop**					
3	**Acct**	**FRC**	**Account Name**	**Investment**	**Depreciation**	**Cost of Money**	**Income Tax**	**Ad Valorem**	**Maintenance**	**Total Capital Costs**
4	**Loop (2 wire)**				cD*(AP p7 cA)/12	cD*(AP p7 cB)/12	cD*(AP p7 cC)/12	cD*(AP p7 cD)/12	cD*(AP p7 cE)/12	sum(cE:cI)
5	2111	20C	Land	0.46	0.0000000	0.0037175	0.0014058	0.0003677	0.0004919	0.0059829
6	2121	110C	Building	24.75	0.0532582	0.1544249	0.0583979	0.0196903	0.0263401	0.3121114
7	2212	377C	Digital Switch	27.71	0.2514920	0.1049396	0.0396843	0.0220441	0.0231327	0.4412926
8	2232.2	257C	Pair Gain—Digital	96.15	0.8791084	0.3642037	0.1377286	0.0764898	0.0843610	1.5418916
9	2411	1C	Poles	7.81	0.0798027	0.0240199	0.0090835	0.0062153	0.0019180	0.1210394
10	2421.11,.21	52C	Aerial Cbl Metallic	14.96	0.1311737	0.0678011	0.0256399	0.0119032	0.1384981	0.3750160
11	2421.11	42C	Aerial Drop	8.97	0.0786162	0.0406351	0.0153667	0.0071339	0.0830059	0.2247578
12	2422.11,.21	5C	UG Cbl Metallic	41.79	0.3168811	0.1957369	0.0740206	0.0332471	0.1066244	0.7265100
13	2422.12,.22	85C	UG Cbl Nonmetallic	3.08	0.0181849	0.0145387	0.0054980	0.0024540	0.0048587	0.0455343
14	2423.11,.21	45C	Buried Cbl Metallic	316.11	1.6043012	1.5030700	0.5684065	0.2514712	1.3861910	5.3134399
15	2423.11	35C	Buried Drop	49.78	0.2526244	0.2366838	0.0895052	0.0395984	0.2182793	0.8366911
16	2423.12,.22	845C	Buried Cbl Nonmetallic	24.28	0.1232067	0.1154324	0.0436523	0.0193124	0.0466810	0.3482848
17	2426.1	62C	Intrabuilding Cbl., Exch., Metallic	19.98	0.1044011	0.0972061	0.0367598	0.0158975	0.0584832	0.3127477
18	2431	3C	Aerial Wire	0.21	0.0047779	0.0015988	0.0006046	0.0001665	0.0004269	0.0075747
19	2441	4C	Conduit System	70.99	0.1268581	0.3821779	0.1445258	0.0564766	0.0428418	0.7528803
20			**Total**	**707.04**	**4.02**	**3.31**	**1.25**	**0.56**	**2.22**	**$ 11.37**
21	**Feeder (2 wire)**									
22	2111	20C	Land	0.46	0.0000000	0.0037175	0.0014058	0.0003677	0.0004919	0.0059829
23	2121	110C	Building	24.75	0.0532582	0.1544249	0.0583979	0.0196903	0.0263401	0.3121114
24	2212	377C	Digital Switch	27.71	0.2514920	0.1049396	0.0396843	0.0220441	0.0231327	0.4412926
25	2232.2	257C	Pair Gain—Digital	96.15	0.8791084	0.3642037	0.1377286	0.0764898	0.0843610	1.5418916
26	2411	1C	Poles	0.07	0.0007579	0.0002281	0.0000863	0.0000590	0.0000182	0.0011496
27	2421.11,.21	52C	Aerial Cbl Metallic	0.14	0.0012633	0.0006530	0.0002469	0.0001146	0.0013338	0.0036116
28	2422.11,.21	5C	UG Cbl Metallic	35.61	0.2699823	0.1667676	0.0630654	0.0283265	0.0908439	0.6189857
29	2422.12,.22	85C	UG Cbl Nonmetallic	3.08	0.0181849	0.0145387	0.0054980	0.0024540	0.0048587	0.0455343
30	2423.11,.21	45C	Buried Cbl Metallic	1.62	0.0082062	0.0076884	0.0029075	0.0012863	0.0070906	0.0271790
31	2423.12,.22	845C	Buried Cbl Nonmetallic	24.28	0.1232067	0.1154324	0.0436523	0.0193124	0.0466810	0.3482848
32	2441	4C	Conduit System	70.99	0.1268581	0.3821779	0.1445258	0.0564766	0.0428418	0.7528803
33			**Total**	**284.87**	**1.73**	**1.31**	**0.50**	**0.23**	**0.33**	**$ 4.10**
34	**Distribution (2 wire)**									
35	2411	1C	Poles	7.74	0.0790447	0.0237918	0.0089972	0.0061563	0.0018997	0.1198898
36	2421.11,.21	52C	Aerial Cbl Metallic	14.82	0.1299104	0.0671481	0.0253930	0.0117885	0.1371643	0.3714044
37	2421.11	42C	Aerial Drop	8.97	0.0786162	0.0406351	0.0153667	0.0071339	0.0830059	0.2247578
38	2422.11,.21	5C	UG Cbl Metallic	6.19	0.0468987	0.0289693	0.0109551	0.0049206	0.0157805	0.1075243
39	2423.11,.21	45C	Buried Cbl Metallic	314.49	1.5960950	1.4953815	0.5654990	0.2501849	1.3791005	5.2862608
40	2423.11	35C	Buried Drop	49.78	0.2526244	0.2366838	0.0895052	0.0395984	0.2182793	0.8366911
41	2426.1	62C	Intrabuilding Cbl., Exch., Metallic	19.98	0.1044011	0.0972061	0.0367598	0.0158975	0.0584832	0.3127477
42	2431	3C	Aerial Wire	0.21	0.0047779	0.0015988	0.0006046	0.0001665	0.0004269	0.0075747
43			**Total**	**422.17**	**2.29**	**1.99**	**0.75**	**0.34**	**1.89**	**$ 7.27**
44	**Investment Sources**									
45	Land = (AP p12 B10) * (377C + 57C+257C+257CS+357C+357CS)					Building = (AP p12 C10) *(377C+57C+257C+257CS+357C+357CS)				
46	Unbundled Loop = sA p9 cD-I							Billing = AP p10 F21		

Section A - U[illegible]ndled Loop
Loop Zone 2- In[illegible]tment Cost 2W

	A	B	C	D	E	F	G	H	I	J
1	Qwest Default Values 5/30/02 9:43:47 AM									
2	South Dakota				**Wire Center Zone 2 Unbundled Loop**					
3	**Acct**	**FRC**	**Account Name**	**Investment**	**Depreciation**	**Cost of Money**	**Income Tax**	**Ad Valorem**	**Maintenance**	**Total Capital Costs**
4	**Loop (2 wire)**				cD*(AP p7 cA)/12	cD*(AP p7 cB)/12	cD*(AP p7 cC)/12	cD*(AP p7 cD)/12	cD*(AP p7 cE)/12	sum(cE:cI)
5	2111	20C	Land	0.83	0.0000000	0.0066481	0.0025141	0.0006576	0.0008797	0.0106994
6	2121	110C	Building	44.26	0.0952433	0.2761630	0.1044348	0.0352128	0.0471049	0.5581587
7	2212	377C	Digital Switch	27.71	0.2514920	0.1049396	0.0396843	0.0220441	0.0231327	0.4412926
8	2232.2	257C	Pair Gain—Digital	193.79	1.7718657	0.7340619	0.2775956	0.1541673	0.1700318	3.1077222
9	2411	1C	Poles	16.44	0.1679211	0.0505429	0.0191135	0.0130783	0.0040358	0.2546915
10	2421.11,.21	52C	Aerial Cbl Metallic	29.69	0.2602951	0.1345413	0.0508786	0.0236201	0.2748293	0.7441645
11	2421.11	42C	Aerial Drop	14.46	0.1267788	0.0655294	0.0247808	0.0115044	0.1338578	0.3624511
12	2422.11,.21	5C	UG Cbl Metallic	37.60	0.2851277	0.1761229	0.0666033	0.0299155	0.0959400	0.6537095
13	2422.12,.22	85C	UG Cbl Nonmetallic	9.62	0.0566861	0.0453200	0.0171384	0.0076496	0.0151454	0.1419393
14	2423.11,.21	45C	Buried Cbl Metallic	576.61	2.9263990	2.7417435	1.0368278	0.4587076	2.5285452	9.6922229
15	2423.11	35C	Buried Drop	89.83	0.4559140	0.4271458	0.1615310	0.0714637	0.3939309	1.5099854
16	2423.12,.22	845C	Buried Cbl Nonmetallic	162.01	0.8222371	0.7703540	0.2913199	0.1288841	0.3115320	2.3243270
17	2426.1	62C	Intrabuilding Cbl., Exch., Metallic	9.44	0.0493260	0.0459266	0.0173678	0.0075110	0.0276313	0.1477628
18	2431	3C	Aerial Wire	2.23	0.0509998	0.0170662	0.0064538	0.0017769	0.0045571	0.0808538
19	2441	4C	Conduit System	83.30	0.1488510	0.4484347	0.1695817	0.0662678	0.0502691	0.8834043
20			**Total**	**1297.83**	**7.47**	**6.04**	**2.29**	**1.03**	**4.08**	**$ 20.91**
21	**Feeder (2 wire)**									
22	2111	20C	Land	0.83	0.0000000	0.0066481	0.0025141	0.0006576	0.0008797	0.0106994
23	2121	110C	Building	44.26	0.0952433	0.2761630	0.1044348	0.0352128	0.0471049	0.5581587
24	2212	377C	Digital Switch	27.71	0.2514920	0.1049396	0.0396843	0.0220441	0.0231327	0.4412926
25	2232.2	257C	Pair Gain—Digital	193.79	1.7718657	0.7340619	0.2775956	0.1541673	0.1700318	3.1077222
26	2411	1C	Poles	0.06	0.0006610	0.0001990	0.0000752	0.0000515	0.0000159	0.0010026
27	2421.11,.21	52C	Aerial Cbl Metallic	0.13	0.0011018	0.0005695	0.0002154	0.0001000	0.0011633	0.0031499
28	2422.11,.21	5C	UG Cbl Metallic	34.58	0.2621770	0.1619463	0.0612422	0.0275076	0.0882176	0.6010907
29	2422.12,.22	85C	UG Cbl Nonmetallic	9.62	0.0566861	0.0453200	0.0171384	0.0076496	0.0151454	0.1419393
30	2423.11,.21	45C	Buried Cbl Metallic	1.81	0.0091614	0.0085833	0.0032459	0.0014360	0.0079159	0.0303425
31	2423.12,.22	845C	Buried Cbl Nonmetallic	162.01	0.8222371	0.7703540	0.2913199	0.1288841	0.3115320	2.3243270
32	2441	4C	Conduit System	83.30	0.1488510	0.4484347	0.1695817	0.0662678	0.0502691	0.8834043
33			**Total**	**558.09**	**3.42**	**2.56**	**0.97**	**0.44**	**0.72**	**$ 8.10**
34	**Distribution (2 wire)**									
35	2411	1C	Poles	16.38	0.1672600	0.0503439	0.0190382	0.0130268	0.0040199	0.2536889
36	2421.11,.21	52C	Aerial Cbl Metallic	29.57	0.2591933	0.1339719	0.0506633	0.0235201	0.2736660	0.7410147
37	2421.11	42C	Aerial Drop	14.46	0.1267788	0.0655294	0.0247808	0.0115044	0.1338578	0.3624511
38	2422.11,.21	5C	UG Cbl Metallic	3.03	0.0229507	0.0141766	0.0053611	0.0024080	0.0077225	0.0526188
39	2423.11,.21	45C	Buried Cbl Metallic	574.80	2.9172375	2.7331602	1.0335819	0.4572715	2.5206293	9.6618804
40	2423.11	35C	Buried Drop	89.83	0.4559140	0.4271458	0.1615310	0.0714637	0.3939309	1.5099854
41	2426.1	62C	Intrabuilding Cbl., Exch., Metallic	9.44	0.0493260	0.0459266	0.0173678	0.0075110	0.0276313	0.1477628
42	2431	3C	Aerial Wire	2.23	0.0509998	0.0170662	0.0064538	0.0017769	0.0045571	0.0808538
43			**Total**	**739.74**	**4.05**	**3.49**	**1.32**	**0.59**	**3.37**	**$ 12.81**
44	**Investment Sources**									
45	Land = (AP p12 B10) * (377C + 57C+257C+257CS+357C+357CS)					Building = (AP p12 C10) *(377C+57C+257C+257CS+357C+357CS)				
46	Unbundled Loop = sA p9 cD-I							Billing = AP p10 F21		

Section A - Unbundled Loop
Loop Zone 3- Investment Cost 2W

	A	B	C	D	E	F	G	H	I	J
1	Qwest Default Values 5/30/02 9:43:47 AM									
2	South Dakota				**Wire Center Zone 3 Unbundled Loop**					
3	**Acct**	**FRC**	**Account Name**	**Investment**	**Depreciation**	**Cost of Money**	**Income Tax**	**Ad Valorem**	**Maintenance**	**Total Capital Costs**
4	**Loop (2 wire)**				cD*(AP p7 cA)/12	cD*(AP p7 cB)/12	cD*(AP p7 cC)/12	cD*(AP p7 cD)/12	cD*(AP p7 cE)/12	sum(cE:cI)
5	2111	20C	Land	1.32	0.0000000	0.0106534	0.0040287	0.0010538	0.0014097	0.0171457
6	2121	110C	Building	70.93	0.1526257	0.4425463	0.1673549	0.0564279	0.0754847	0.8944395
7	2212	377C	Digital Switch	27.71	0.2514920	0.1049396	0.0396843	0.0220441	0.0231327	0.4412926
8	2232.2	257C	Pair Gain—Digital	327.24	2.9920258	1.2395591	0.4687562	0.2603315	0.2871208	5.2477934
9	2411	1C	Poles	22.09	0.2256541	0.0679200	0.0256849	0.0175747	0.0054233	0.3422570
10	2421.11,.21	52C	Aerial Cbl Metallic	36.44	0.3194741	0.1651298	0.0624461	0.0289902	0.3373127	0.9133530
11	2421.11	42C	Aerial Drop	14.75	0.1293488	0.0668578	0.0252832	0.0117376	0.1365714	0.3697988
12	2422.11,.21	5C	UG Cbl Metallic	42.57	0.3227682	0.1993734	0.0753958	0.0338648	0.1086053	0.7400075
13	2422.12,.22	85C	UG Cbl Nonmetallic	6.30	0.0371540	0.0297042	0.0112331	0.0050138	0.0099268	0.0930318
14	2423.11,.21	45C	Buried Cbl Metallic	632.95	3.2123414	3.0096430	1.1381377	0.5035285	2.7756128	10.6392634
15	2423.11	35C	Buried Drop	98.88	0.5018360	0.4701702	0.1778013	0.0786618	0.4336097	1.6620789
16	2423.12,.22	845C	Buried Cbl Nonmetallic	466.66	2.3683958	2.2189503	0.8391264	0.3712416	0.8973458	6.6950599
17	2426.1	62C	Intrabuilding Cbl., Exch., Metallic	9.53	0.0497899	0.0463585	0.0175311	0.0075817	0.0278912	0.1491524
18	2431	3C	Aerial Wire	6.46	0.1474856	0.0493534	0.0186637	0.0051385	0.0131786	0.2338198
19	2441	4C	Conduit System	84.86	0.1516312	0.4568105	0.1727491	0.0675055	0.0512080	0.8999045
20			**Total**	**1848.70**	**10.86**	**8.58**	**3.24**	**1.47**	**5.18**	**$ 29.34**
21	**Feeder (2 wire)**									
22	2111	20C	Land	1.32	0.0000000	0.0106534	0.0040287	0.0010538	0.0014097	0.0171457
23	2121	110C	Building	70.93	0.1526257	0.4425463	0.1673549	0.0564279	0.0754847	0.8944395
24	2212	377C	Digital Switch	27.71	0.2514920	0.1049396	0.0396843	0.0220441	0.0231327	0.4412926
25	2232.2	257C	Pair Gain—Digital	327.24	2.9920258	1.2395591	0.4687562	0.2603315	0.2871208	5.2477934
26	2411	1C	Poles	0.61	0.0062811	0.0018906	0.0007149	0.0004892	0.0001510	0.0095268
27	2421.11,.21	52C	Aerial Cbl Metallic	1.19	0.0104688	0.0054111	0.0020463	0.0009500	0.0110534	0.0299295
28	2422.11,.21	5C	UG Cbl Metallic	39.42	0.2988856	0.1846211	0.0698170	0.0313590	0.1005693	0.6852519
29	2422.12,.22	85C	UG Cbl Nonmetallic	6.30	0.0371540	0.0297042	0.0112331	0.0050138	0.0099268	0.0930318
30	2423.11,.21	45C	Buried Cbl Metallic	19.03	0.0965977	0.0905024	0.0342247	0.0151415	0.0834649	0.3199313
31	2423.12,.22	845C	Buried Cbl Nonmetallic	466.66	2.3683958	2.2189503	0.8391264	0.3712416	0.8973458	6.6950599
32	2441	4C	Conduit System	84.86	0.1516312	0.4568105	0.1727491	0.0675055	0.0512080	0.8999045
33			**Total**	**1045.29**	**6.37**	**4.79**	**1.81**	**0.83**	**1.54**	**$ 15.33**
34	**Distribution (2 wire)**									
35	2411	1C	Poles	21.48	0.2193730	0.0660295	0.0249699	0.0170855	0.0052724	0.3327302
36	2421.11,.21	52C	Aerial Cbl Metallic	35.25	0.3090053	0.1597187	0.0603998	0.0280403	0.3262594	0.8834234
37	2421.11	42C	Aerial Drop	14.75	0.1293488	0.0668578	0.0252832	0.0117376	0.1365714	0.3697988
38	2422.11,.21	5C	UG Cbl Metallic	3.15	0.0238827	0.0147523	0.0055788	0.0025058	0.0080361	0.0547556
39	2423.11,.21	45C	Buried Cbl Metallic	613.92	3.1157437	2.9191406	1.1039129	0.4883870	2.6921479	10.3193321
40	2423.11	35C	Buried Drop	98.88	0.5018360	0.4701702	0.1778013	0.0786618	0.4336097	1.6620789
41	2426.1	62C	Intrabuilding Cbl., Exch., Metallic	9.53	0.0497899	0.0463585	0.0175311	0.0075817	0.0278912	0.1491524
42	2431	3C	Aerial Wire	6.46	0.1474856	0.0493534	0.0186637	0.0051385	0.0131786	0.2338198
43			**Total**	**803.41**	**4.50**	**3.79**	**1.43**	**0.64**	**3.64**	**$ 14.01**
44	**Investment Sources**									
45	Land = (AP p12 B10) * (377C + 57C+257C+257CS+357C+357CS)					Building = (AP p12 C10) *(377C+57C+257C+257CS+357C+357CS)				
46	Unbundled Loop = sA p9 cD-I							Billing = AP p10 F21		

NOTICE: The information contained herein is confidential and proprietary and should not be disclosed to unauthorized persons.
It is meant for use by authorized representatives of Qwest only.

South Dakota
Qwest Default Values 5/30/02 9:43:47 AM

2-Wire Unbundled Loop Cost Summary by Zones

Office Name		Statewide Average	Wire Center Zone	Wire Center Zone	Wire Center Zone	Wire Center Zone	Wire Center Zone
Zone			1	2	3	4	5
Total Loop Cost Calculations							
Investments by Account (From Wire Center Loop Costs or *Loop Length Zone Data*)	FRC						
Poles	1C	$16.09	$7.81	$16.44	$22.09	$0.00	$0.00
Aerial Cbl Metallic	52C	$27.73	$14.96	$29.69	$36.44	$0.00	$0.00
Aerial Wire	3C	$3.50	$0.21	$2.23	$6.46	$0.00	$0.00
Conduit System	4C	$79.76	$70.99	$83.30	$84.86	$0.00	$0.00
UG Cbl Metallic	5C	$41.37	$41.79	$37.60	$42.57	$0.00	$0.00
Buried Cbl Metallic	45C	$512.61	$316.11	$576.61	$632.95	$0.00	$0.00
Intrabuilding Cbl., Exch., Metallic	62C	$13.14	$19.98	$9.44	$9.53	$0.00	$0.00
UG Cbl Nonmetallic	85C	$5.81	$3.08	$9.62	$6.30	$0.00	$0.00
Pair Gain—Digital	257C	$222.17	$96.15	$193.79	$327.24	$0.00	$0.00
Buried Cbl Nonmetallic	845C	$256.31	$24.28	$162.01	$466.66	$0.00	$0.00
Buried Drop	35C	$80.17	$49.78	$89.83	$98.88	$0.00	$0.00
Aerial Drop	42C	$12.69	$8.97	$14.46	$14.75	$0.00	$0.00
Digital Switch	377c	$27.71	$27.71	$27.71	$27.71	$0.00	$0.00
Land	20C	$0.93	$0.46	$0.83	$1.32	$0.00	$0.00
Building	110C	$49.93	$24.75	$44.26	$70.93	$0.00	$0.00
General Purpose Comp. (Billing)	361C	$0.0001	$0.0001	$0.0001	$0.0001	$0.0000	$0.0000
Total Loop Investment		**$1,349.93**	**$707.04**	**$1,297.83**	**$1,848.70**	**$0.00**	**$0.00**
Investment Cost Calculation							
Depreciation		$7.86	$4.02	$7.47	$10.86	$0.00	$0.00
Cost of Money		$6.28	$3.31	$6.04	$8.58	$0.00	$0.00
Income Tax		$2.37	$1.25	$2.29	$3.24	$0.00	$0.00
Ad Valorem		$1.07	$0.56	$1.03	$1.47	$0.00	$0.00
Maintenance		$3.95	$2.22	$4.08	$5.18	$0.00	$0.00
Total Capital Costs		$21.53	$11.37	$20.91	$29.34	$0.00	$0.00
Development of Total Product Costs							
Element Specific Expenses		$0.0165	$0.0165	$0.0165	$0.0165	$0.0000	$0.0000
Sub-Total Expenses		$22.27	$12.10	$21.65	$30.07	$0.00	$0.00
TELRIC		$28.32	$18.16	$27.70	$36.13	$0.00	$0.00
Common		$2.02	$2.02	$2.02	$2.02	$0.00	$0.00
Total Loop TELRIC + Common		**$30.34**	**$20.18**	**$29.72**	**$38.15**	**$0.00**	**$0.00**
Feeder Cost Calculations							
Investments by Account	FRC						
Poles	1C	$0.32	$0.07	$0.06	$0.61	$0.00	$0.00
Aerial Cbl Metallic	52C	$0.63	$0.14	$0.13	$1.19	$0.00	$0.00
Conduit System	4C	$79.76	$70.99	$83.30	$84.86	$0.00	$0.00
UG Cbl Metallic	5C	$37.19	$35.61	$34.58	$39.42	$0.00	$0.00
Buried Cbl Metallic	45C	$9.77	$1.62	$1.81	$19.03	$0.00	$0.00
UG Cbl Nonmetallic	85C	$5.81	$3.08	$9.62	$6.30	$0.00	$0.00
Pair Gain—Digital	257C	$222.17	$96.15	$193.79	$327.24	$0.00	$0.00
Buried Cbl Nonmetallic	845C	$256.31	$24.28	$162.01	$466.66	$0.00	$0.00
Digital Switch	377C	$27.71	$27.71	$27.71	$27.71	$0.00	$0.00
Land	20C	$0.93	$0.46	$0.83	$1.32	$0.00	$0.00
Building	110C	$49.93	$24.75	$44.26	$70.93	$0.00	$0.00
General Purpose Comp. (Billing)	361C	$0.0001	$0.0001	$0.0001	$0.0001	$0.0000	$0.0000
Total Feeder Investment		**$690.55**	**$284.87**	**$558.09**	**$1,045.29**	**$0.00**	**$0.00**
Investment Cost Calculation							
Depreciation		$4.21	$1.73	$3.42	$6.37	$0.00	$0.00
Cost of Money		$3.17	$1.31	$2.56	$4.79	$0.00	$0.00
Income Tax		$1.20	$0.50	$0.97	$1.81	$0.00	$0.00
Ad Valorem		$0.55	$0.23	$0.44	$0.83	$0.00	$0.00
Maintenance		$0.97	$0.33	$0.72	$1.54	$0.00	$0.00
Total Feeder Capital Costs		$10.09	$4.10	$8.10	$15.33	$0.00	$0.00
Development of Total Product Costs							
Element Specific Expenses		$0.0165	$0.0165	$0.0165	$0.0165	$0.0000	$0.0000
Sub-Total Expenses		$10.44	$4.45	$8.46	$15.69	$0.00	$0.00
TELRIC		$13.28	$7.29	$11.30	$18.53	$0.00	$0.00
Common		$0.95	$0.95	$0.95	$0.95	$0.00	$0.00
Feeder TELRIC + Common		**$14.23**	**$8.24**	**$12.24**	**$19.47**	**$0.00**	**$0.00**
Distribution Cost Calculations							
Investments by Account	FRC						
Poles	1C	$15.76	$7.74	$16.38	$21.48	$0.00	$0.00
Aerial Cbl Metallic	52C	$27.10	$14.82	$29.57	$35.25	$0.00	$0.00
Aerial Wire	3C	$3.50	$0.21	$2.23	$6.46	$0.00	$0.00
UG Cbl Metallic	5C	$4.18	$6.19	$3.03	$3.15	$0.00	$0.00
Buried Cbl Metallic	45C	$502.84	$314.49	$574.80	$613.92	$0.00	$0.00
Intrabuilding Cbl., Exch., Metallic	62C	$13.14	$19.98	$9.44	$9.53	$0.00	$0.00
Buried Drop	35C	$80.17	$49.78	$89.83	$98.88	$0.00	$0.00
Aerial Drop	42C	$12.69	$8.97	$14.46	$14.75	$0.00	$0.00
General Purpose Comp. (Billing)	361C	$0.0001	$0.0001	$0.0001	$0.0001	$0.0000	$0.0000
Total Distribution Investment		**$659.39**	**$422.17**	**$739.74**	**$803.41**	**$0.00**	**$0.00**
Investment Cost Calculation							
Depreciation		$3.65	$2.29	$4.05	$4.50	$0.00	$0.00
Cost of Money		$3.11	$1.99	$3.49	$3.79	$0.00	$0.00
Income Tax		$1.18	$0.75	$1.32	$1.43	$0.00	$0.00
Ad Valorem		$0.52	$0.34	$0.59	$0.64	$0.00	$0.00
Maintenance		$2.99	$1.89	$3.37	$3.64	$0.00	$0.00
Total Distribution Capital Costs		$11.45	$7.27	$12.81	$14.01	$0.00	$0.00
Development of Total Product Costs							
Element Specific Expenses		$0.0165	$0.0165	$0.0165	$0.0165	$0.0000	$0.0000
Sub-Total Expenses		$11.85	$7.67	$13.21	$14.40	$0.00	$0.00
TELRIC		$15.07	$10.69	$16.43	$17.63	$0.00	$0.00
Common		$1.07	$1.07	$1.07	$1.07	$0.00	$0.00
Distribution TELRIC + Common		**$16.14**	**$11.96**	**$17.50**	**$18.70**	**$0.00**	**$0.00**

South Dakota
Qwest Default Values 5/30/02 9:43:47 AM

4-Wire Unbundled Loop Cost Summary by Zones

Office Name		Statewide Average	Wire Center Zone	Wire Center Zone	Wire Center Zone	Wire Center Zone	Wire Center Zone
Zone			1	2	3	4	5
Total Loop Cost Calculations							
Investments by Account (From Wire Center Loop Costs or Loop Length Zone Data)	FRC						
Poles	1C	$32.17	$15.63	$32.88	$44.18	$0.00	$0.00
Aerial Cbl Metallic	52C	$55.47	$29.93	$59.38	$72.88	$0.00	$0.00
Aerial Wire	3C	$7.00	$0.42	$4.47	$12.92	$0.00	$0.00
Conduit System	4C	$159.52	$141.99	$166.60	$169.71	$0.00	$0.00
UG Cbl Metallic	5C	$82.74	$83.58	$75.21	$85.14	$0.00	$0.00
Buried Cbl Metallic	45C	$1,025.22	$632.21	$1,153.22	$1,265.90	$0.00	$0.00
Intrabuilding Cbl., Exch., Metallic	62C	$26.27	$39.97	$18.88	$19.06	$0.00	$0.00
UG Cbl Nonmetallic	85C	$11.62	$6.17	$19.23	$12.60	$0.00	$0.00
Pair Gain—Digital	257C	$444.35	$192.30	$387.58	$654.49	$0.00	$0.00
Buried Cbl Nonmetallic	845C	$512.62	$48.55	$324.02	$933.32	$0.00	$0.00
Buried Drop	35C	$160.34	$99.55	$179.66	$197.76	$0.00	$0.00
Aerial Drop	42C	$25.39	$17.94	$28.92	$29.51	$0.00	$0.00
Digital Switch	377c	$55.42	$55.42	$55.42	$55.42	$0.00	$0.00
Land	20C	$1.87	$0.92	$1.65	$2.65	$0.00	$0.00
Building	110C	$99.87	$49.50	$88.53	$141.86	$0.00	$0.00
General Purpose Comp. (Billing)	361C	$0.0001	$0.0001	$0.0001	$0.0001	$0.0000	$0.0000
Total Loop Investment		**$2,699.87**	**$1,414.07**	**$2,595.66**	**$3,697.41**	**$0.00**	**$0.00**
Investment Cost Calculation							
Depreciation		$15.71	$8.05	$14.94	$21.72	$0.00	$0.00
Cost of Money		$12.55	$6.61	$12.09	$17.16	$0.00	$0.00
Income Tax		$4.75	$2.50	$4.57	$6.49	$0.00	$0.00
Ad Valorem		$2.15	$1.12	$2.06	$2.94	$0.00	$0.00
Maintenance		$7.90	$4.44	$8.16	$10.37	$0.00	$0.00
Total Capital Costs		$43.07	$22.73	$41.83	$58.68	$0.00	$0.00
Development of Total Product Costs							
Element Specific Expenses		$0.0165	$0.0165	$0.0165	$0.0165	$0.0000	$0.0000
Sub-Total Expenses		$44.52	$24.19	$43.28	$60.13	$0.00	$0.00
TELRIC		$56.63	$36.29	$55.39	$72.24	$0.00	$0.00
Common		$4.04	$4.04	$4.04	$4.04	$0.00	$0.00
Total Loop TELRIC + Common		**$60.66**	**$40.33**	**$59.42**	**$76.27**	**$0.00**	**$0.00**
Feeder Cost Calculations							
Investments by Account	FRC						
Poles	1C	$0.65	$0.15	$0.13	$1.23	$0.00	$0.00
Aerial Cbl Metallic	52C	$1.26	$0.29	$0.25	$2.39	$0.00	$0.00
Conduit System	4C	$159.52	$141.99	$166.60	$169.71	$0.00	$0.00
UG Cbl Metallic	5C	$74.38	$71.21	$69.16	$78.84	$0.00	$0.00
Buried Cbl Metallic	45C	$19.54	$3.23	$3.61	$36.07	$0.00	$0.00
UG Cbl Nonmetallic	85C	$11.62	$6.17	$19.23	$12.60	$0.00	$0.00
Pair Gain—Digital	257C	$444.35	$192.30	$387.58	$654.49	$0.00	$0.00
Buried Cbl Nonmetallic	845C	$512.62	$48.55	$324.02	$933.32	$0.00	$0.00
Digital Switch	377C	$55.42	$55.42	$55.42	$55.42	$0.00	$0.00
Land	20C	$1.87	$0.92	$1.65	$2.65	$0.00	$0.00
Building	110C	$99.87	$49.50	$88.53	$141.86	$0.00	$0.00
General Purpose Comp. (Billing)	361C	$0.0001	$0.0001	$0.0001	$0.0001	$0.0000	$0.0000
Total Feeder Investment		**$1,381.09**	**$569.74**	**$1,116.19**	**$2,090.58**	**$0.00**	**$0.00**
Investment Cost Calculation							
Depreciation		$8.42	$3.46	$6.84	$12.73	$0.00	$0.00
Cost of Money		$6.33	$2.63	$5.11	$9.57	$0.00	$0.00
Income Tax		$2.39	$0.99	$1.93	$3.62	$0.00	$0.00
Ad Valorem		$1.10	$0.45	$0.89	$1.66	$0.00	$0.00
Maintenance		$1.93	$0.66	$1.43	$3.08	$0.00	$0.00
Total Feeder Capital Costs		$20.17	$8.20	$16.21	$30.67	$0.00	$0.00
Development of Total Product Costs							
Element Specific Expenses		$0.0165	$0.0165	$0.0165	$0.0165	$0.0000	$0.0000
Sub-Total Expenses		$20.86	$8.89	$16.90	$31.36	$0.00	$0.00
TELRIC		$26.54	$14.56	$22.57	$37.03	$0.00	$0.00
Common		$1.89	$1.89	$1.89	$1.89	$0.00	$0.00
Feeder TELRIC + Common		**$28.43**	**$16.45**	**$24.46**	**$38.92**	**$0.00**	**$0.00**
Distribution Cost Calculations							
Investments by Account	FRC						
Poles	1C	$31.52	$15.48	$32.75	$42.95	$0.00	$0.00
Aerial Cbl Metallic	52C	$54.21	$29.64	$59.13	$70.49	$0.00	$0.00
Aerial Wire	3C	$7.00	$0.42	$4.47	$12.92	$0.00	$0.00
UG Cbl Metallic	5C	$8.36	$12.37	$6.05	$6.30	$0.00	$0.00
Buried Cbl Metallic	45C	$1,005.68	$628.98	$1,149.61	$1,227.83	$0.00	$0.00
Intrabuilding Cbl., Exch., Metallic	62C	$26.27	$39.97	$18.88	$19.06	$0.00	$0.00
Buried Drop	35C	$160.34	$99.55	$179.66	$197.76	$0.00	$0.00
Aerial Drop	42C	$25.39	$17.94	$28.92	$29.51	$0.00	$0.00
General Purpose Comp. (Billing)	361C	$0.0001	$0.0001	$0.0001	$0.0001	$0.0000	$0.0000
Total Distribution Investment		**$1,318.78**	**$844.34**	**$1,479.48**	**$1,606.83**	**$0.00**	**$0.00**
Investment Cost Calculation							
Depreciation		$7.30	$4.58	$8.10	$8.99	$0.00	$0.00
Cost of Money		$6.22	$3.98	$6.97	$7.58	$0.00	$0.00
Income Tax		$2.35	$1.51	$2.64	$2.87	$0.00	$0.00
Ad Valorem		$1.05	$0.67	$1.18	$1.28	$0.00	$0.00
Maintenance		$5.97	$3.79	$6.73	$7.29	$0.00	$0.00
Total Distribution Capital Costs		$22.89	$14.53	$25.62	$28.01	$0.00	$0.00
Development of Total Product Costs							
Element Specific Expenses		$0.0165	$0.0165	$0.0165	$0.0165	$0.0000	$0.0000
Sub-Total Expenses		$23.67	$15.31	$26.40	$28.79	$0.00	$0.00
TELRIC		$30.11	$21.75	$32.84	$35.23	$0.00	$0.00
Common		$2.15	$2.15	$2.15	$2.15	$0.00	$0.00
Distribution TELRIC + Common		**$32.26**	**$23.90**	**$34.99**	**$37.38**	**$0.00**	**$0.00**

Section A - Unbundled Loop
Wire Center Loop Costs 2W

	A	B	C	D	E	F	G	H	I	J
1	South Dakota									
2	Qwest Default Values 5/30/02 9:43:47 AM									
3	**2W Wire Center Cost Calculations**									
4		**Office Name**		**Aberdeen**	**Arlington**	**Belle Fourche**	**Blackhawk**	**Cavour**	**Chamberlain**	**Colman**
5		CLLI		ABRDSDCO	ARTNSDCO	BLFRSDCO	BLHKSDCE	CAVRSDCO	CHBLSDCO	CLMNSDCO
6		Zone		3	3	3	2	3	3	3
7		Lines		20161	1225	2221	4174	282	2397	468
8	**Total Loop Cost Calculations**									
9	Investments by Account (From Loop Module Output or Loop Length Zone Data)		FRC							
10		Poles	1C	$15.77	$66.97	$43.39	$26.70	$14.99	$26.24	$8.90
11		Aerial Cbl Metallic	52C	$27.73	$90.77	$63.91	$45.59	$29.11	$47.92	$17.29
12		Aerial Wire	3C	$2.90	$39.29	$20.36	$6.25	$0.00	$3.04	$0.00
13		Conduit System	4C	$99.54	$23.72	$27.16	$36.37	$47.23	$19.84	$43.87
14		UG Cbl Metallic	5C	$51.28	$10.59	$14.89	$11.97	$6.96	$9.62	$20.76
15		Buried Cbl Metallic	45C	$526.93	$1,209.42	$914.01	$830.49	$654.19	$893.01	$369.95
16		Intrabuilding Cbl., Exch., Metallic	62C	$13.57	$7.95	$9.74	$7.12	$2.12	$3.76	$28.24
17		UG Cbl Nonmetallic	85C	$6.70	$4.03	$2.49	$8.59	$16.65	$2.16	$9.77
18		Pair Gain—Digital	257C	$167.21	$836.52	$592.23	$375.57	$3,981.03	$366.89	$1,473.21
19		Buried Cbl Nonmetallic	845C	$334.65	$1,172.74	$593.74	$395.02	$4,072.51	$408.31	$2,177.82
20		Buried Drop	35C	$78.73	$151.03	$132.58	$124.08	$80.08	$126.53	$32.97
21		Aerial Drop	42C	$12.60	$18.92	$17.31	$17.57	$15.74	$18.57	$6.48
22		Digital Switch	377C	$27.71	$27.71	$27.71	$27.71	$27.71	$27.71	$27.71
23		Land	20C	$0.73	$3.23	$2.31	$1.51	$14.96	$1.47	$5.60
24		Building	110C	$38.95	$172.70	$123.88	$80.59	$801.08	$78.85	$299.93
25		General Purpose Comp. (Billing)	361C	$0.0001	$0.0001	$0.0001	$0.0001	$0.0001	$0.0001	$0.0001
26										
27		**Total Loop Investment**		**$1,404.99**	**$3,835.58**	**$2,585.72**	**$1,995.12**	**$9,764.35**	**$2,033.92**	**$4,522.52**
28	Investment Cost Calculation									
29		Depreciation		$7.89	$23.86	$16.10	$11.92	$63.56	$12.08	$28.20
30		Cost of Money		$6.59	$17.66	$11.87	$9.20	$43.78	$9.37	$20.52
31		Income Tax		$2.49	$6.68	$4.49	$3.48	$16.56	$3.54	$7.76
32		Ad Valorem		$1.12	$3.05	$2.06	$1.59	$7.77	$1.62	$3.60
33		Maintenance		$4.14	$10.35	$7.30	$6.08	$15.93	$6.37	$8.00
34		Total Capital Costs		$22.22	$61.60	$41.82	$32.27	$147.60	$32.98	$68.08
35	Development of Total Product Costs									
36		Element Specific Expenses		$0.0165	$0.0165	$0.0165	$0.0165	$0.0165	$0.0165	$0.0165
37		Sub-Total Expenses		$22.98	$62.33	$42.56	$33.00	$148.34	$33.72	$68.82
38		TELRIC		$29.01	$68.39	$48.61	$39.08	$154.40	$39.78	$74.88
39		Common		$2.02	$2.02	$2.02	$2.02	$2.02	$2.02	$2.02
40	**Total Loop TELRIC + Common**			**$31.03**	**$70.41**	**$50.63**	**$41.08**	**$156.41**	**$41.79**	**$76.89**
41	**Feeder Cost Calculations**									
42	Investments by Account		FRC							
43		Poles	1C	$0.00	$0.87	$4.43	$0.36	$2.70	$2.46	$3.29
44		Aerial Cbl Metallic	52C	$0.00	$1.69	$8.60	$0.70	$5.24	$4.77	$6.39
45		Conduit System	4C	$99.54	$23.72	$27.16	$36.37	$47.23	$19.84	$43.87
46		UG Cbl Metallic	5C	$47.08	$8.29	$12.05	$9.82	$6.16	$8.39	$12.56
47		Buried Cbl Metallic	45C	$0.00	$63.72	$135.32	$13.62	$164.06	$57.11	$121.36
48		UG Cbl Nonmetallic	85C	$6.70	$4.03	$2.49	$8.59	$16.65	$2.16	$9.77
49		Pair Gain—Digital	257C	$167.21	$836.52	$592.23	$375.57	$3,981.03	$366.89	$1,473.21
50		Buried Cbl Nonmetallic	845C	$334.65	$1,172.74	$593.74	$395.02	$4,072.51	$408.31	$2,177.82
51		Digital Switch	377C	$27.71	$27.71	$27.71	$27.71	$27.71	$27.71	$27.71
52		Land	20C	$0.73	$3.23	$2.31	$1.51	$14.96	$1.47	$5.60
53		Building	110C	$38.95	$172.70	$123.88	$80.59	$801.08	$78.85	$299.93
54		General Purpose Comp. (Billing)	361C	$0.0001	$0.0001	$0.0001	$0.0001	$0.0001	$0.0001	$0.0001
55										
56		**Total Feeder Investment**		**$722.56**	**$2,315.22**	**$1,529.94**	**$949.85**	**$9,139.32**	**$977.97**	**$4,181.51**
57	Investment Cost Calculation									
58		Depreciation		$4.14	$14.70	$9.91	$6.13	$60.18	$6.32	$26.36
59		Cost of Money		$3.37	$10.45	$6.87	$4.27	$40.84	$4.40	$18.91
60		Income Tax		$1.27	$3.95	$2.60	$1.62	$15.44	$1.66	$7.15
61		Ad Valorem		$0.57	$1.84	$1.22	$0.76	$7.27	$0.78	$3.33
62		Maintenance		$1.05	$3.54	$2.54	$1.33	$13.05	$1.55	$6.49
63		Total Feeder Capital Costs		$10.40	$34.48	$23.14	$14.10	$136.79	$14.70	$62.24
64	Development of Total Product Costs									
65		Element Specific Expenses		$0.0165	$0.0165	$0.0165	$0.0165	$0.0165	$0.0165	$0.0165
66		Sub-Total Expenses		$10.75	$34.84	$23.50	$14.46	$137.14	$15.06	$62.60
67		TELRIC		$13.59	$37.68	$26.33	$17.29	$139.98	$17.89	$65.44
68		Common		$0.95	$0.95	$0.95	$0.95	$0.95	$0.95	$0.95
69	**Feeder TELRIC + Common**			**$14.54**	**$38.62**	**$27.28**	**$18.24**	**$140.93**	**$18.84**	**$66.38**
70	**Distribution Cost Calculations**									
71	Investments by Account		FRC							
72		Poles	1C	$15.77	$66.11	$38.96	$26.34	$12.29	$23.78	$5.61
73		Aerial Cbl Metallic	52C	$27.73	$89.08	$55.31	$44.89	$23.87	$43.15	$10.90
74		Aerial Wire	3C	$2.90	$39.29	$20.36	$6.25	$0.00	$3.04	$0.00
75		UG Cbl Metallic	5C	$4.21	$2.30	$2.84	$2.15	$0.80	$1.23	$8.20
76		Buried Cbl Metallic	45C	$526.93	$1,145.69	$778.69	$816.87	$490.13	$835.90	$248.60
77		Intrabuilding Cbl., Exch., Metallic	62C	$13.57	$7.95	$9.74	$7.12	$2.12	$3.76	$28.24
78		Buried Drop	35C	$78.73	$151.03	$132.58	$124.08	$80.08	$126.53	$32.97
79		Aerial Drop	42C	$12.60	$18.92	$17.31	$17.57	$15.74	$18.57	$6.48
80		General Purpose Comp. (Billing)	361C	$0.0001	$0.0001	$0.0001	$0.0001	$0.0001	$0.0001	$0.0001
81		**Total Distribution Investment**		**$682.43**	**$1,520.36**	**$1,055.79**	**$1,045.28**	**$625.03**	**$1,055.95**	**$341.01**
82	Investment Cost Calculation									
83		Depreciation		$3.76	$9.16	$6.20	$5.79	$3.38	$5.77	$1.85
84		Cost of Money		$3.22	$7.21	$5.00	$4.93	$2.94	$4.98	$1.61
85		Income Tax		$1.22	$2.73	$1.89	$1.86	$1.11	$1.88	$0.61
86		Ad Valorem		$0.54	$1.21	$0.84	$0.83	$0.50	$0.84	$0.27
87		Maintenance		$3.09	$6.81	$4.76	$4.75	$2.88	$4.82	$1.50
88		Total Distribution Capital Costs		$11.83	$27.11	$18.68	$18.17	$10.82	$18.28	$5.84
89	Development of Total Product Costs									
90		Element Specific Expenses		$0.0165	$0.0165	$0.0165	$0.0165	$0.0165	$0.0165	$0.0165
91		Sub-Total Expenses		$12.22	$27.51	$19.08	$18.56	$11.21	$18.68	$8.24
92		TELRIC		$15.45	$30.73	$22.30	$21.79	$14.44	$21.90	$9.46
93		Common		$1.07	$1.07	$1.07	$1.07	$1.07	$1.07	$1.07
94	**Distribution TELRIC + Common**			**$16.52**	**$31.81**	**$23.37**	**$22.86**	**$15.51**	**$22.98**	**$10.53**

Section A - Unbundled Loop
Wire Center Loop Costs 2W

	A	B	C	K	L	M	N	O	P	Q	R
1	South Dakota										
2	Qwest Default Values 5/30/02 9:43:47 AM										
3	**2W Wire Center Cost Calculations**										
4		**Office Name**		**Canton**	**Deadwood**	**Desmet**	**Elk Point**	**Flandreau**	**Ft Pierre**	**Hill City**	**Harrisburg**
5		CLLI		CNTNSDCO	DDWDSDCO	DESMSDCO	ELPNSDCO	FLNDSDCO	FTPRSDCE	HLCYSDCO	HRBGSDCO
6		Zone		3	3	3	3	3	3	3	1
7		Lines		1193	1804	1139	694	1635	1645	1974	1102
8	**Total Loop Cost Calculations**										
9	Investments by Account (From Loop Module Output or Loop Length Zone Data)		FRC								
10		Poles	1C	$34.19	$28.57	$38.27	$45.65	$90.61	$33.53	$46.69	$22.92
11		Aerial Cbl Metallic	52C	$56.31	$44.64	$59.56	$71.38	$122.83	$57.28	$69.65	$41.35
12		Aerial Wire	3C	$10.09	$10.84	$10.87	$17.27	$53.12	$7.83	$21.02	$3.16
13		Conduit System	4C	$34.90	$18.05	$25.97	$38.95	$22.22	$23.47	$12.96	$9.83
14		UG Cbl Metallic	5C	$15.11	$7.75	$9.85	$13.66	$9.72	$9.79	$3.78	$4.88
15		Buried Cbl Metallic	45C	$934.87	$748.27	$1,078.42	$1,061.62	$1,551.57	$1,033.63	$1,046.72	$802.96
16		Intrabuilding Cbl., Exch., Metallic	62C	$4.54	$4.69	$0.61	$0.00	$3.19	$0.45	$0.55	$10.28
17		UG Cbl Nonmetallic	85C	$4.64	$3.08	$4.01	$6.59	$3.02	$2.85	$3.07	$2.95
18		Pair Gain—Digital	257C	$541.38	$632.03	$886.54	$1,281.02	$660.02	$384.80	$980.96	$570.81
19		Buried Cbl Nonmetallic	845C	$697.89	$813.67	$929.58	$1,575.77	$862.60	$636.95	$1,314.35	$546.87
20		Buried Drop	35C	$148.81	$135.50	$146.89	$174.72	$128.50	$152.19	$162.23	$117.14
21		Aerial Drop	42C	$19.76	$18.76	$20.58	$22.57	$18.53	$21.00	$21.43	$16.43
22		Digital Switch	377c	$27.71	$27.71	$27.71	$27.71	$27.71	$27.71	$27.71	$27.71
23		Land	20C	$2.12	$2.46	$3.41	$4.88	$2.57	$1.54	$3.76	$2.23
24		Building	110C	$113.72	$131.84	$182.70	$261.53	$137.43	$82.43	$201.56	$119.60
25		General Purpose Comp. (Billing)	361C	$0.0001	$0.0001	$0.0001	$0.0001	$0.0001	$0.0001	$0.0001	$0.0001
26											
27		**Total Loop Investment**		**$2,646.05**	**$2,627.87**	**$3,422.96**	**$4,603.31**	**$3,693.62**	**$2,475.45**	**$3,916.43**	**$2,299.13**
28	Investment Cost Calculation										
29		Depreciation		$15.96	$16.16	$21.16	$28.69	$23.01	$14.54	$24.20	$14.11
30		Cost of Money		$12.18	$12.04	$15.64	$21.00	$17.09	$11.46	$17.93	$10.50
31		Income Tax		$4.61	$4.55	$5.92	$7.94	$6.46	$4.33	$6.78	$3.97
32		Ad Valorem		$2.11	$2.09	$2.72	$3.66	$2.94	$1.97	$3.12	$1.83
33		Maintenance		$7.53	$6.83	$8.98	$10.87	$11.27	$7.67	$9.85	$5.34
34		Total Capital Costs		$42.39	$41.67	$54.42	$72.17	$60.78	$39.98	$61.96	$36.76
35	Development of Total Product Costs										
36		Element Specific Expenses		$0.0165	$0.0165	$0.0165	$0.0165	$0.0165	$0.0165	$0.0165	$0.0165
37		Sub-Total Expenses		$43.12	$42.40	$55.15	$72.90	$61.51	$40.71	$62.70	$37.49
38		TELRIC		$49.18	$48.46	$61.21	$78.96	$67.57	$46.77	$68.76	$43.55
39		Common		$2.02	$2.02	$2.02	$2.02	$2.02	$2.02	$2.02	$2.02
40	**Total Loop TELRIC + Common**			**$51.20**	**$50.48**	**$63.23**	**$80.98**	**$69.59**	**$48.79**	**$70.77**	**$45.57**
41	**Feeder Cost Calculations**										
42	Investments by Account		FRC								
43		Poles	1C	$2.72	$1.25	$0.44	$7.10	$5.18	$2.09	$0.55	$0.72
44		Aerial Cbl Metallic	52C	$5.28	$2.43	$0.86	$13.79	$10.05	$4.06	$1.07	$1.40
45		Conduit System	4C	$34.90	$18.05	$25.97	$38.95	$22.22	$23.47	$12.96	$9.83
46		UG Cbl Metallic	5C	$13.76	$6.30	$9.56	$13.66	$8.67	$9.57	$3.50	$1.90
47		Buried Cbl Metallic	45C	$67.95	$78.26	$63.32	$199.46	$149.45	$81.79	$10.05	$32.75
48		UG Cbl Nonmetallic	85C	$4.64	$3.08	$4.01	$6.59	$3.02	$2.85	$3.07	$2.95
49		Pair Gain—Digital	257C	$541.38	$632.03	$886.54	$1,281.02	$660.02	$384.80	$980.96	$570.81
50		Buried Cbl Nonmetallic	845C	$697.89	$813.67	$929.58	$1,575.77	$862.60	$636.95	$1,314.35	$546.87
51		Digital Switch	377C	$27.71	$27.71	$27.71	$27.71	$27.71	$27.71	$27.71	$27.71
52		Land	20C	$2.12	$2.46	$3.41	$4.88	$2.57	$1.54	$3.76	$2.23
53		Building	110C	$113.72	$131.84	$182.70	$261.53	$137.43	$82.43	$201.56	$119.60
54		General Purpose Comp. (Billing)	361C	$0.0001	$0.0001	$0.0001	$0.0001	$0.0001	$0.0001	$0.0001	$0.0001
55											
56		**Total Feeder Investment**		**$1,512.06**	**$1,717.08**	**$2,134.10**	**$3,430.46**	**$1,888.91**	**$1,257.26**	**$2,559.54**	**$1,316.77**
57	Investment Cost Calculation										
58		Depreciation		$9.60	$10.97	$13.94	$21.94	$11.98	$7.78	$16.46	$8.74
59		Cost of Money		$6.83	$7.74	$9.56	$15.46	$8.53	$5.72	$11.51	$5.87
60		Income Tax		$2.58	$2.93	$3.62	$5.85	$3.23	$2.16	$4.35	$2.22
61		Ad Valorem		$1.20	$1.37	$1.70	$2.73	$1.50	$1.00	$2.04	$1.05
62		Maintenance		$2.37	$2.68	$3.12	$5.53	$3.20	$2.11	$3.71	$1.88
63		Total Feeder Capital Costs		$22.59	$25.69	$31.94	$51.51	$28.44	$18.78	$38.07	$19.76
64	Development of Total Product Costs										
65		Element Specific Expenses		$0.0165	$0.0165	$0.0165	$0.0165	$0.0165	$0.0165	$0.0165	$0.0165
66		Sub-Total Expenses		$22.94	$26.04	$32.29	$51.86	$28.80	$19.13	$38.42	$20.11
67		TELRIC		$25.78	$28.88	$35.13	$54.70	$31.83	$21.97	$41.26	$22.95
68		Common		$0.95	$0.95	$0.95	$0.95	$0.95	$0.95	$0.95	$0.95
69	**Feeder TELRIC + Common**			**$26.73**	**$29.83**	**$36.08**	**$55.65**	**$32.58**	**$22.91**	**$42.21**	**$23.89**
70	**Distribution Cost Calculations**										
71	Investments by Account		FRC								
72		Poles	1C	$31.47	$27.32	$35.82	$38.55	$85.43	$31.44	$46.14	$22.20
73		Aerial Cbl Metallic	52C	$51.02	$42.21	$58.70	$57.59	$112.78	$53.23	$68.58	$39.95
74		Aerial Wire	3C	$10.09	$10.84	$10.87	$17.27	$53.12	$7.83	$21.02	$3.16
75		UG Cbl Metallic	5C	$1.36	$1.46	$0.29	$0.00	$1.04	$0.22	$0.28	$2.98
76		Buried Cbl Metallic	45C	$868.92	$670.01	$1,015.11	$862.18	$1,402.12	$951.84	$1,036.67	$770.21
77		Intrabuilding Cbl., Exch., Metallic	62C	$4.54	$4.69	$0.61	$0.00	$3.19	$0.45	$0.55	$10.28
78		Buried Drop	35C	$148.81	$135.50	$146.89	$174.72	$128.50	$152.19	$162.23	$117.14
79		Aerial Drop	42C	$19.76	$18.76	$20.58	$22.57	$18.53	$21.00	$21.43	$16.43
80		General Purpose Comp. (Billing)	361C	$0.0001	$0.0001	$0.0001	$0.0001	$0.0001	$0.0001	$0.0001	$0.0001
81		**Total Distribution Investment**		**$1,133.99**	**$910.79**	**$1,288.86**	**$1,172.85**	**$1,804.71**	**$1,218.20**	**$1,356.89**	**$982.36**
82	Investment Cost Calculation										
83		Depreciation		$6.36	$5.18	$7.21	$6.75	$11.03	$6.76	$7.83	$5.37
84		Cost of Money		$5.35	$4.30	$6.08	$5.54	$8.56	$5.75	$6.41	$4.63
85		Income Tax		$2.02	$1.63	$2.30	$2.10	$3.24	$2.17	$2.43	$1.75
86		Ad Valorem		$0.90	$0.72	$1.03	$0.93	$1.44	$0.97	$1.08	$0.78
87		Maintenance		$5.15	$4.14	$5.86	$5.33	$8.07	$5.55	$6.15	$4.46
88		Total Distribution Capital Costs		$19.80	$15.98	$22.48	$20.66	$32.33	$21.20	$23.90	$17.00
89	Development of Total Product Costs										
90		Element Specific Expenses		$0.0165	$0.0165	$0.0165	$0.0165	$0.0165	$0.0165	$0.0165	$0.0165
91		Sub-Total Expenses		$20.19	$16.38	$22.88	$21.06	$32.73	$21.60	$24.30	$17.40
92		TELRIC		$23.42	$19.60	$26.10	$24.28	$35.95	$24.82	$27.52	$20.62
93		Common		$1.07	$1.07	$1.07	$1.07	$1.07	$1.07	$1.07	$1.07
94	**Distribution TELRIC + Common**			**$24.49**	**$20.68**	**$27.18**	**$25.35**	**$37.03**	**$25.89**	**$28.59**	**$21.69**

Section A - Unbundled Loop
Wire Center Loop Costs 2W

	A	B	C	S	T	U	V	W	X	Y	Z
1	South Dakota										
2	Qwest Default Values 5/30/02 9:43:47 AM										
3	**2W Wire Center Cost Calculations**										
4		**Office Name**		**Huron**	**Iroquois**	**Lead**	**Lake Preston**	**Mcintosh**	**Madison**	**Milbank**	**Miller**
5		CLLI		HURNSDCO	IRQSSDCO	LEADSDCO	LKPRSDCO	MCINSDCO	MDSNSDCE	MLBNSDCO	MLLRSDCO
6		Zone		3	3	3	3	3	3	3	3
7		Lines		9726	373	1482	779	297	4594	3899	1619
8	**Total Loop Cost Calculations**										
9	Investments by Account (From Loop Module Output or Loop Length Zone Data)		FRC								
10		Poles	1C	$16.21	$24.66	$47.18	$41.50	$17.27	$11.60	$25.11	$19.56
11		Aerial Cbl Metallic	52C	$28.43	$47.88	$75.61	$70.18	$33.53	$21.94	$43.96	$37.98
12		Aerial Wire	3C	$3.04	$0.00	$16.01	$10.41	$0.00	$0.59	$4.81	$0.00
13		Conduit System	4C	$94.31	$45.97	$20.52	$31.48	$53.67	$112.93	$84.36	$21.20
14		UG Cbl Metallic	5C	$48.89	$9.82	$9.57	$10.20	$18.08	$52.83	$35.21	$8.81
15		Buried Cbl Metallic	45C	$532.67	$914.42	$1,179.89	$1,188.99	$708.96	$442.43	$814.29	$791.90
16		Intrabuilding Cbl., Exch., Metallic	62C	$9.26	$0.58	$0.84	$0.00	$8.92	$9.58	$1.62	$1.24
17		UG Cbl Nonmetallic	85C	$5.15	$13.25	$1.71	$6.03	$11.96	$10.92	$10.05	$2.98
18		Pair Gain—Digital	257C	$169.67	$2,375.95	$629.55	$1,440.42	$2,087.46	$255.33	$374.74	$1,107.93
19		Buried Cbl Nonmetallic	845C	$192.58	$2,270.59	$797.32	$1,692.81	$2,881.53	$355.53	$657.28	$1,109.72
20		Buried Drop	35C	$94.34	$137.43	$160.34	$167.77	$67.83	$73.28	$136.30	$113.86
21		Aerial Drop	42C	$14.92	$20.13	$21.42	$22.21	$13.34	$12.63	$19.71	$18.33
22		Digital Switch	377c	$27.71	$27.71	$27.71	$27.71	$27.71	$27.71	$27.71	$27.71
23		Land	20C	$0.74	$8.97	$2.45	$5.48	$7.89	$1.06	$1.50	$4.24
24		Building	110C	$39.44	$480.33	$131.34	$293.38	$422.68	$56.56	$80.42	$226.94
25		General Purpose Comp. (Billing)	361C	$0.0001	$0.0001	$0.0001	$0.0001	$0.0001	$0.0001	$0.0001	$0.0001
26											
27	**Total Loop Investment**			**$1,277.37**	**$6,377.68**	**$3,121.48**	**$5,008.56**	**$6,360.81**	**$1,444.92**	**$2,317.06**	**$3,492.39**
28	Investment Cost Calculation										
29		Depreciation		$7.28	$40.96	$18.96	$31.17	$39.75	$8.28	$13.42	$21.92
30		Cost of Money		$5.97	$28.71	$14.37	$22.81	$28.85	$6.73	$10.76	$15.83
31		Income Tax		$2.26	$10.86	$5.43	$8.62	$10.91	$2.54	$4.07	$5.98
32		Ad Valorem		$1.02	$5.07	$2.48	$3.98	$5.06	$1.15	$1.84	$2.78
33		Maintenance		$3.96	$12.32	$9.11	$11.75	$11.82	$3.83	$6.64	$7.92
34		Total Capital Costs		$20.49	$97.92	$50.36	$78.34	$96.39	$22.53	$36.73	$54.43
35	Development of Total Product Costs										
36		Element Specific Expenses		$0.0165	$0.0165	$0.0165	$0.0165	$0.0165	$0.0165	$0.0165	$0.0165
37		Sub-Total Expenses		$21.23	$98.66	$51.09	$79.07	$97.12	$23.26	$37.47	$55.16
38		TELRIC		$27.28	$104.71	$57.15	$85.13	$103.18	$29.32	$43.52	$61.22
39		Common		$2.02	$2.02	$2.02	$2.02	$2.02	$2.02	$2.02	$2.02
40	**Total Loop TELRIC + Common**			**$29.30**	**$106.73**	**$59.17**	**$87.15**	**$105.20**	**$31.34**	**$45.54**	**$63.24**
41	**Feeder Cost Calculations**										
42	Investments by Account		FRC								
43		Poles	1C	$0.00	$3.85	$4.88	$3.62	$6.71	$0.00	$0.00	$2.39
44		Aerial Cbl Metallic	52C	$0.00	$7.47	$9.48	$7.04	$13.03	$0.00	$0.00	$4.65
45		Conduit System	4C	$94.31	$45.97	$20.52	$31.48	$53.67	$112.93	$84.36	$21.20
46		UG Cbl Metallic	5C	$46.03	$9.54	$9.31	$10.20	$15.36	$49.41	$34.64	$8.17
47		Buried Cbl Metallic	45C	$0.00	$88.81	$108.91	$80.28	$281.65	$0.00	$0.00	$104.95
48		UG Cbl Nonmetallic	85C	$5.15	$13.25	$1.71	$6.03	$11.96	$10.92	$10.05	$2.98
49		Pair Gain—Digital	257C	$169.67	$2,375.95	$629.55	$1,440.42	$2,087.46	$255.33	$374.74	$1,107.93
50		Buried Cbl Nonmetallic	845C	$192.58	$2,270.59	$797.32	$1,692.81	$2,881.53	$355.53	$657.28	$1,109.72
51		Digital Switch	377C	$27.71	$27.71	$27.71	$27.71	$27.71	$27.71	$27.71	$27.71
52		Land	20C	$0.74	$8.97	$2.45	$5.48	$7.89	$1.06	$1.50	$4.24
53		Building	110C	$39.44	$480.33	$131.34	$293.38	$422.68	$56.56	$80.42	$226.94
54		General Purpose Comp. (Billing)	361C	$0.0001	$0.0001	$0.0001	$0.0001	$0.0001	$0.0001	$0.0001	$0.0001
55											
56	**Total Feeder Investment**			**$575.63**	**$5,332.44**	**$1,741.19**	**$3,598.45**	**$5,809.65**	**$869.45**	**$1,270.70**	**$2,620.88**
57	Investment Cost Calculation										
58		Depreciation		$3.41	$35.32	$11.13	$23.32	$36.77	$5.15	$7.66	$17.22
59		Cost of Money		$2.66	$23.79	$7.85	$16.16	$26.25	$4.01	$5.83	$11.72
60		Income Tax		$1.01	$9.00	$2.97	$6.11	$9.93	$1.52	$2.20	$4.43
61		Ad Valorem		$0.46	$4.24	$1.39	$2.86	$4.62	$0.69	$1.01	$2.08
62		Maintenance		$0.77	$7.53	$2.85	$5.33	$9.30	$1.20	$1.86	$3.92
63		Total Feeder Capital Costs		$8.31	$79.88	$28.18	$53.78	$86.87	$12.58	$18.56	$39.37
64	Development of Total Product Costs										
65		Element Specific Expenses		$0.0165	$0.0165	$0.0165	$0.0165	$0.0165	$0.0165	$0.0165	$0.0165
66		Sub-Total Expenses		$8.66	$80.23	$26.53	$54.13	$87.22	$12.93	$18.91	$39.73
67		TELRIC		$11.50	$83.07	$29.37	$56.97	$90.06	$15.77	$21.75	$42.57
68		Common		$0.95	$0.95	$0.95	$0.95	$0.95	$0.95	$0.95	$0.95
69	**Feeder TELRIC + Common**			**$12.45**	**$84.02**	**$30.32**	**$57.92**	**$91.01**	**$16.72**	**$22.70**	**$43.51**
70	**Distribution Cost Calculations**										
71	Investments by Account		FRC								
72		Poles	1C	$16.21	$20.81	$42.30	$37.88	$10.55	$11.60	$25.11	$17.16
73		Aerial Cbl Metallic	52C	$28.43	$40.41	$66.13	$63.14	$20.49	$21.94	$43.96	$33.33
74		Aerial Wire	3C	$3.04	$0.00	$16.01	$10.41	$0.00	$0.59	$4.81	$0.00
75		UG Cbl Metallic	5C	$2.86	$0.27	$0.26	$0.00	$2.73	$3.42	$0.57	$0.64
76		Buried Cbl Metallic	45C	$532.67	$825.61	$1,072.98	$1,108.71	$427.31	$442.43	$814.29	$686.95
77		Intrabuilding Cbl., Exch., Metallic	62C	$9.26	$0.58	$0.84	$0.00	$8.92	$9.58	$1.62	$1.24
78		Buried Drop	35C	$94.34	$137.43	$160.34	$167.77	$67.83	$73.28	$136.30	$113.86
79		Aerial Drop	42C	$14.92	$20.13	$21.42	$22.21	$13.34	$12.63	$19.71	$18.33
80		General Purpose Comp. (Billing)	361C	$0.0001	$0.0001	$0.0001	$0.0001	$0.0001	$0.0001	$0.0001	$0.0001
81	**Total Distribution Investment**			**$701.73**	**$1,045.24**	**$1,380.29**	**$1,410.12**	**$551.17**	**$575.47**	**$1,046.37**	**$871.51**
82	Investment Cost Calculation										
83		Depreciation		$3.87	$5.64	$7.83	$7.85	$2.98	$3.13	$5.76	$4.70
84		Cost of Money		$3.31	$4.92	$6.52	$6.65	$2.60	$2.71	$4.93	$4.10
85		Income Tax		$1.25	$1.86	$2.47	$2.52	$0.98	$1.03	$1.87	$1.55
86		Ad Valorem		$0.56	$0.83	$1.10	$1.12	$0.44	$0.46	$0.83	$0.69
87		Maintenance		$3.20	$4.79	$6.26	$6.42	$2.52	$2.62	$4.78	$4.00
88		Total Distribution Capital Costs		$12.18	$18.04	$24.18	$24.56	$9.52	$9.95	$18.17	$15.05
89	Development of Total Product Costs										
90		Element Specific Expenses		$0.0165	$0.0165	$0.0165	$0.0165	$0.0165	$0.0165	$0.0165	$0.0165
91		Sub-Total Expenses		$12.58	$18.44	$24.58	$24.96	$9.92	$10.34	$18.57	$15.45
92		TELRIC		$15.80	$21.66	$27.80	$28.18	$13.14	$13.57	$21.79	$18.67
93		Common		$1.07	$1.07	$1.07	$1.07	$1.07	$1.07	$1.07	$1.07
94	**Distribution TELRIC + Common**			**$16.88**	**$22.74**	**$28.87**	**$29.25**	**$14.22**	**$14.64**	**$22.87**	**$19.75**

Section A - Unbundled Loop
Wire Center Loop Costs 2W

	A	B	C	AA	AB	AC	AD	AE	AF	AG	AH
1	South Dakota										
2	Qwest Default Values 5/30/02 9:43:47 AM										
3	**2W Wire Center Cost Calculations**										
4		**Office Name**		**Morristown**	**Mitchell**	**Pierre**	**Redfield**	**Rapid City**	**Rapid Valley**	**Spearfish**	**Sturgis**
5		CLLI		MRTWSDCO	MTCHSDCO	PIRRSDCO	RDFDSDCO	RPCYSDCO	RPVYSDCO	SPRFSDCO	STRGSDCO
6		Zone		3	3	3	3	2	2	3	3
7		Lines		233	11104	14965	2881	40256	3839	5534	2868
8	**Total Loop Cost Calculations**										
9	Investments by Account (From Loop Module Output or Loop Length Zone Data)		FRC								
10		Poles	1C	$12.88	$12.93	$8.43	$64.86	$14.81	$19.92	$26.95	$33.51
11		Aerial Cbl Metallic	52C	$25.00	$24.55	$14.34	$92.43	$26.79	$37.30	$46.30	$55.98
12		Aerial Wire	3C	$0.00	$0.57	$2.02	$33.53	$1.98	$1.40	$6.03	$9.08
13		Conduit System	4C	$61.59	$104.73	$92.06	$142.00	$86.56	$133.99	$87.63	$107.37
14		UG Cbl Metallic	5C	$18.70	$49.61	$54.35	$59.52	$39.80	$62.90	$40.36	$48.25
15		Buried Cbl Metallic	45C	$553.85	$501.26	$276.64	$1,305.38	$522.83	$744.56	$830.22	$965.44
16		Intrabuilding Cbl., Exch., Metallic	62C	$7.29	$10.58	$23.98	$0.00	$10.78	$1.25	$0.53	$0.33
17		UG Cbl Nonmetallic	85C	$14.72	$9.61	$3.85	$15.91	$9.64	$9.91	$6.96	$9.48
18		Pair Gain—Digital	257C	$3,357.09	$163.33	$129.21	$883.53	$151.29	$239.70	$241.49	$505.13
19		Buried Cbl Nonmetallic	845C	$3,147.76	$369.95	$149.83	$1,188.52	$100.84	$341.33	$359.11	$575.79
20		Buried Drop	35C	$70.76	$78.39	$38.00	$189.62	$82.65	$114.95	$146.44	$156.72
21		Aerial Drop	42C	$13.91	$13.68	$6.16	$23.33	$13.58	$18.36	$20.63	$21.35
22		Digital Switch	377c	$27.71	$27.71	$27.71	$27.71	$27.71	$27.71	$27.71	$27.71
23		Land	20C	$12.63	$0.71	$0.59	$3.40	$0.67	$1.00	$1.00	$1.99
24		Building	110C	$676.39	$38.18	$31.36	$182.10	$35.77	$53.44	$53.79	$106.48
25		General Purpose Comp. (Billing)	361C	$0.0001	$0.0001	$0.0001	$0.0001	$0.0001	$0.0001	$0.0001	$0.0001
26											
27		**Total Loop Investment**		**$8,000.28**	**$1,405.79**	**$858.52**	**$4,211.84**	**$1,125.70**	**$1,807.73**	**$1,895.17**	**$2,624.61**
28	Investment Cost Calculation										
29		Depreciation		$52.40	$7.80	$4.89	$25.58	$6.42	$10.16	$10.86	$15.58
30		Cost of Money		$35.82	$6.59	$4.02	$19.47	$5.26	$8.46	$8.84	$12.15
31		Income Tax		$13.55	$2.49	$1.52	$7.36	$1.99	$3.20	$3.34	$4.59
32		Ad Valorem		$6.36	$1.12	$0.68	$3.35	$0.90	$1.44	$1.51	$2.09
33		Maintenance		$12.99	$4.06	$2.30	$11.26	$3.63	$5.50	$6.07	$7.56
34		Total Capital Costs		$121.11	$22.06	$13.43	$67.03	$18.19	$28.75	$30.63	$41.94
35	Development of Total Product Costs										
36		Element Specific Expenses		$0.0165	$0.0165	$0.0165	$0.0165	$0.0165	$0.0165	$0.0165	$0.0165
37		Sub-Total Expenses		$121.85	$22.80	$14.16	$87.76	$18.92	$29.49	$31.37	$42.68
38		TELRIC		$127.90	$28.85	$20.22	$73.82	$24.98	$35.54	$37.42	$48.73
39		Common		$2.02	$2.02	$2.02	$2.02	$2.02	$2.02	$2.02	$2.02
40	**Total Loop TELRIC + Common**			**$129.92**	**$30.87**	**$22.24**	**$75.84**	**$27.00**	**$37.56**	**$39.44**	**$50.75**
41	**Feeder Cost Calculations**										
42	Investments by Account		FRC								
43		Poles	1C	$1.91	$0.00	$0.00	$0.00	$0.00	$0.00	$0.34	$1.10
44		Aerial Cbl Metallic	52C	$3.70	$0.00	$0.00	$0.00	$0.00	$0.00	$0.66	$2.13
45		Conduit System	4C	$61.59	$104.73	$92.06	$142.00	$86.56	$133.99	$87.63	$107.37
46		UG Cbl Metallic	5C	$16.43	$46.45	$46.36	$59.52	$36.35	$62.29	$40.17	$48.06
47		Buried Cbl Metallic	45C	$111.51	$0.00	$0.00	$0.00	$0.00	$0.00	$7.29	$24.80
48		UG Cbl Nonmetallic	85C	$14.72	$9.61	$3.85	$15.91	$9.64	$9.91	$6.96	$9.48
49		Pair Gain—Digital	257C	$3,357.09	$163.33	$129.21	$883.53	$151.29	$239.70	$241.49	$505.13
50		Buried Cbl Nonmetallic	845C	$3,147.76	$369.95	$149.83	$1,188.52	$100.84	$341.33	$359.11	$575.79
51		Digital Switch	377C	$27.71	$27.71	$27.71	$27.71	$27.71	$27.71	$27.71	$27.71
52		Land	20C	$12.63	$0.71	$0.59	$3.40	$0.67	$1.00	$1.00	$1.99
53		Building	110C	$676.39	$38.18	$31.36	$182.10	$35.77	$53.44	$53.79	$106.48
54		General Purpose Comp. (Billing)	361C	$0.0001	$0.0001	$0.0001	$0.0001	$0.0001	$0.0001	$0.0001	$0.0001
55											
56		**Total Feeder Investment**		**$7,431.44**	**$760.67**	**$480.95**	**$2,502.68**	**$448.82**	**$869.38**	**$826.14**	**$1,410.04**
57	Investment Cost Calculation										
58		Depreciation		$49.32	$4.30	$2.80	$15.55	$2.71	$5.06	$4.95	$8.79
59		Cost of Money		$33.14	$3.55	$2.24	$11.38	$2.07	$4.04	$3.80	$6.42
60		Income Tax		$12.53	$1.34	$0.85	$4.31	$0.78	$1.53	$1.44	$2.43
61		Ad Valorem		$5.91	$0.61	$0.38	$1.99	$0.36	$0.69	$0.66	$1.12
62		Maintenance		$10.38	$1.12	$0.64	$3.54	$0.55	$1.20	$1.19	$2.02
63		Total Feeder Capital Costs		$111.28	$10.92	$6.90	$36.78	$6.47	$12.52	$12.03	$20.77
64	Development of Total Product Costs										
65		Element Specific Expenses		$0.0165	$0.0165	$0.0165	$0.0165	$0.0165	$0.0165	$0.0165	$0.0165
66		Sub-Total Expenses		$111.64	$11.27	$7.26	$37.13	$6.82	$12.87	$12.39	$21.13
67		TELRIC		$114.47	$14.11	$10.10	$39.97	$9.66	$15.71	$15.22	$23.96
68		Common		$0.95	$0.95	$0.95	$0.95	$0.95	$0.95	$0.95	$0.95
69	**Feeder TELRIC + Common**			**$115.42**	**$15.06**	**$11.04**	**$40.92**	**$10.60**	**$16.66**	**$16.17**	**$24.91**
70	**Distribution Cost Calculations**										
71	Investments by Account		FRC								
72		Poles	1C	$10.97	$12.93	$8.43	$64.86	$14.81	$19.92	$26.61	$32.41
73		Aerial Cbl Metallic	52C	$21.30	$24.55	$14.34	$92.43	$26.79	$37.30	$45.64	$53.85
74		Aerial Wire	3C	$0.00	$0.57	$2.02	$33.53	$1.98	$1.40	$6.03	$9.08
75		UG Cbl Metallic	5C	$2.27	$3.16	$7.99	$0.00	$3.45	$0.61	$0.22	$0.18
76		Buried Cbl Metallic	45C	$442.34	$501.26	$276.64	$1,305.38	$522.83	$744.56	$822.93	$940.64
77		Intrabuilding Cbl., Exch., Metallic	62C	$7.29	$10.58	$23.98	$0.00	$10.78	$1.25	$0.53	$0.33
78		Buried Drop	35C	$70.76	$78.39	$38.00	$189.62	$82.65	$114.95	$146.44	$156.72
79		Aerial Drop	42C	$13.91	$13.68	$6.16	$23.33	$13.58	$18.36	$20.63	$21.35
80		General Purpose Comp. (Billing)	361C	$0.0001	$0.0001	$0.0001	$0.0001	$0.0001	$0.0001	$0.0001	$0.0001
81		**Total Distribution Investment**		**$568.84**	**$645.12**	**$377.57**	**$1,709.16**	**$676.87**	**$938.35**	**$1,069.04**	**$1,214.56**
82	Investment Cost Calculation										
83		Depreciation		$3.08	$3.50	$2.09	$10.03	$3.71	$5.10	$5.91	$6.77
84		Cost of Money		$2.68	$3.04	$1.78	$8.09	$3.19	$4.42	$5.04	$5.73
85		Income Tax		$1.01	$1.15	$0.67	$3.06	$1.21	$1.67	$1.91	$2.17
86		Ad Valorem		$0.45	$0.51	$0.30	$1.36	$0.54	$0.75	$0.85	$0.97
87		Maintenance		$2.61	$2.94	$1.67	$7.71	$3.08	$4.30	$4.89	$5.54
88		Total Distribution Capital Costs		$9.83	$11.14	$6.52	$30.25	$11.72	$16.23	$18.60	$21.17
89	Development of Total Product Costs										
90		Element Specific Expenses		$0.0165	$0.0165	$0.0165	$0.0165	$0.0165	$0.0165	$0.0165	$0.0165
91		Sub-Total Expenses		$10.23	$11.54	$6.92	$30.65	$12.12	$16.63	$19.00	$21.57
92		TELRIC		$13.45	$14.76	$10.14	$33.87	$15.34	$19.85	$22.22	$24.79
93		Common		$1.07	$1.07	$1.07	$1.07	$1.07	$1.07	$1.07	$1.07
94	**Distribution TELRIC + Common**			**$14.52**	**$15.84**	**$11.21**	**$34.94**	**$16.41**	**$20.93**	**$23.29**	**$25.86**

Section A - Unbundled Loop
Wire Center Loop Costs 2W

	A	B	C	AI	AJ	AK	AL	AM	AN	AO	AP	AQ
1	South Dakota											
2	Qwest Default Values 5/30/02 9:43:47 AM											
3	2W Wire Center Cost Calculations											
4		Office Name		Sioux Falls Main	Sioux Falls Southeast	Sioux Falls Southwest	Tea	Timber Lake	Volga	Vermillion	Whitewood	Warwick
5		CLLI		SXFLSDCO	SXFLSDSE	SXFLSDSW	TEA-SDCO	TMLKSDCO	VOLGSDCO	VRMLSDCO	WHWDSDCO	WRWKSDCO
6		Zone		1	1	1	1	3	3	3	3	2
7		Lines		74995	4282	14821	1100	562	1330	8743	310	3786
8	**Total Loop Cost Calculations**											
9	Investments by Account (From Loop Module Output or Loop Length Zone Data)		FRC									
10		Poles	1C	$5.87	$11.28	$13.62	$33.18	$14.59	$34.95	$14.43	$62.62	$18.88
11		Aerial Cbl Metallic	52C	$11.40	$20.45	$26.44	$55.76	$28.32	$58.41	$22.76	$87.06	$35.31
12		Aerial Wire	3C	$0.01	$1.46	$0.00	$8.66	$0.00	$9.47	$5.27	$34.55	$1.36
13		Conduit System	4C	$66.72	$5.39	$119.78	$20.24	$34.21	$22.07	$79.81	$62.36	$49.02
14		UG Cbl Metallic	5C	$40.55	$4.58	$63.97	$8.52	$14.79	$8.72	$43.91	$15.86	$16.85
15		Buried Cbl Metallic	45C	$248.47	$407.17	$555.25	$864.34	$464.58	$907.71	$381.52	$1,162.01	$698.26
16		Intrabuilding Cbl., Exch., Metallic	62C	$22.12	$15.45	$12.61	$0.89	$19.11	$0.34	$12.05	$0.00	$6.10
17		UG Cbl Nonmetallic	85C	$2.71	$2.49	$5.19	$2.53	$8.13	$2.95	$4.35	$15.54	$10.19
18		Pair Gain—Digital	257C	$86.25	$206.47	$65.98	$274.62	$1,915.09	$845.63	$103.70	$1,679.34	$398.76
19		Buried Cbl Nonmetallic	845C	$6.78	$51.50	$50.13	$239.82	$2,114.27	$1,212.52	$184.34	$1,860.39	$373.76
20		Buried Drop	35C	$39.80	$61.61	$85.71	$132.73	$49.45	$155.08	$69.68	$192.30	$102.92
21		Aerial Drop	42C	$7.64	$11.38	$13.67	$19.59	$9.72	$21.23	$10.42	$23.47	$16.40
22		Digital Switch	377c	$27.71	$27.71	$27.71	$27.71	$27.71	$27.71	$27.71	$27.71	$27.71
23		Land	20C	$0.43	$0.87	$0.35	$1.13	$7.25	$3.26	$0.49	$6.37	$1.59
24		Building	110C	$22.77	$46.80	$18.72	$60.42	$388.23	$174.52	$26.26	$341.12	$85.22
25		General Purpose Comp. (Billing)	361C	$0.0001	$0.0001	$0.0001	$0.0001	$0.0001	$0.0001	$0.0001	$0.0001	$0.0001
26												
27		**Total Loop Investment**		**$589.24**	**$874.62**	**$1,059.13**	**$1,750.14**	**$5,095.44**	**$3,484.57**	**$986.72**	**$5,570.70**	**$1,842.33**
28	Investment Cost Calculation											
29		Depreciation		$3.37	$5.45	$5.69	$10.49	$32.74	$21.30	$5.60	$35.38	$11.03
30		Cost of Money		$2.75	$3.99	$5.01	$8.09	$22.94	$15.96	$4.64	$25.37	$8.47
31		Income Tax		$1.04	$1.51	$1.90	$3.06	$8.67	$6.03	$1.75	$9.59	$3.20
32		Ad Valorem		$0.47	$0.70	$0.84	$1.39	$4.05	$2.77	$0.78	$4.43	$1.47
33		Maintenance		$1.79	$2.77	$3.66	$5.93	$8.93	$8.75	$3.00	$12.59	$5.29
34		Total Capital Costs		$9.43	$14.41	$17.11	$28.95	$77.33	$54.82	$15.78	$87.37	$29.46
35	Development of Total Product Costs											
36		Element Specific Expenses		$0.0165	$0.0165	$0.0165	$0.0165	$0.0165	$0.0165	$0.0165	$0.0165	$0.0165
37		Sub-Total Expenses		$10.16	$15.15	$17.84	$29.69	$78.07	$55.56	$16.51	$88.10	$30.19
38		TELRIC		$16.22	$21.20	$23.90	$35.74	$84.12	$61.61	$22.57	$94.16	$36.25
39		Common		$2.02	$2.02	$2.02	$2.02	$2.02	$2.02	$2.02	$2.02	$2.02
40	**Total Loop TELRIC + Common**			**$18.24**	**$23.22**	**$25.92**	**$37.76**	**$86.14**	**$63.63**	**$24.59**	**$96.18**	**$38.27**
41	**Feeder Cost Calculations**											
42	Investments by Account		FRC									
43		Poles	1C	$0.00	$0.00	$0.00	$5.77	$6.64	$6.06	$0.00	$2.96	$0.49
44		Aerial Cbl Metallic	52C	$0.00	$0.00	$0.00	$11.21	$12.89	$11.76	$0.00	$5.74	$0.96
45		Conduit System	4C	$66.72	$5.39	$119.78	$20.24	$34.21	$22.07	$79.81	$62.36	$49.02
46		UG Cbl Metallic	5C	$33.69	$0.00	$60.09	$8.18	$9.17	$8.68	$38.97	$15.86	$14.90
47		Buried Cbl Metallic	45C	$0.00	$0.00	$0.00	$108.72	$131.51	$133.05	$6.72	$114.11	$9.81
48		UG Cbl Nonmetallic	85C	$2.71	$2.49	$5.19	$2.53	$8.13	$2.95	$4.35	$15.54	$10.19
49		Pair Gain—Digital	257C	$86.25	$206.47	$65.98	$274.62	$1,915.09	$845.63	$103.70	$1,679.34	$398.76
50		Buried Cbl Nonmetallic	845C	$6.78	$51.50	$50.13	$239.82	$2,114.27	$1,212.52	$184.34	$1,860.39	$373.76
51		Digital Switch	377C	$27.71	$27.71	$27.71	$27.71	$27.71	$27.71	$27.71	$27.71	$27.71
52		Land	20C	$0.43	$0.87	$0.35	$1.13	$7.25	$3.26	$0.49	$6.37	$1.59
53		Building	110C	$22.77	$46.80	$18.72	$60.42	$388.23	$174.52	$26.26	$341.12	$85.22
54		General Purpose Comp. (Billing)	361C	$0.0001	$0.0001	$0.0001	$0.0001	$0.0001	$0.0001	$0.0001	$0.0001	$0.0001
55												
56		**Total Feeder Investment**		**$247.06**	**$341.23**	**$347.95**	**$760.34**	**$4,655.10**	**$2,448.21**	**$472.36**	**$4,131.50**	**$972.42**
57	Investment Cost Calculation											
58		Depreciation		$1.51	$2.53	$1.85	$4.93	$30.35	$15.48	$2.69	$26.76	$6.30
59		Cost of Money		$1.14	$1.47	$1.66	$3.42	$20.86	$11.07	$2.21	$18.55	$4.37
60		Income Tax		$0.43	$0.56	$0.63	$1.29	$7.89	$4.18	$0.83	$7.02	$1.65
61		Ad Valorem		$0.20	$0.27	$0.28	$0.60	$3.70	$1.95	$0.38	$3.29	$0.77
62		Maintenance		$0.27	$0.36	$0.43	$1.41	$6.94	$4.02	$0.68	$6.10	$1.32
63		Total Feeder Capital Costs		$3.55	$5.19	$4.85	$11.65	$69.75	$36.69	$6.79	$61.72	$14.42
64	Development of Total Product Costs											
65		Element Specific Expenses		$0.0165	$0.0165	$0.0165	$0.0165	$0.0165	$0.0165	$0.0165	$0.0165	$0.0165
66		Sub-Total Expenses		$3.90	$5.54	$5.20	$12.01	$70.11	$37.05	$7.14	$62.07	$14.77
67		TELRIC		$6.74	$8.38	$8.04	$14.85	$72.95	$39.89	$9.98	$64.91	$17.61
68		Common		$0.95	$0.95	$0.95	$0.95	$0.95	$0.95	$0.95	$0.95	$0.95
69	**Feeder TELRIC + Common**			**$7.69**	**$9.33**	**$8.99**	**$15.79**	**$73.89**	**$40.83**	**$10.93**	**$65.86**	**$18.56**
70	**Distribution Cost Calculations**											
71	Investments by Account		FRC									
72		Poles	1C	$5.87	$11.28	$13.62	$27.40	$7.95	$28.90	$14.43	$59.67	$18.39
73		Aerial Cbl Metallic	52C	$11.40	$20.45	$26.44	$44.55	$15.44	$46.65	$22.76	$81.32	$34.35
74		Aerial Wire	3C	$0.01	$1.46	$0.00	$8.66	$0.00	$9.47	$5.27	$34.55	$1.36
75		UG Cbl Metallic	5C	$6.87	$4.58	$3.97	$0.34	$5.61	$0.04	$4.94	$0.00	$1.95
76		Buried Cbl Metallic	45C	$248.47	$407.17	$555.25	$755.82	$333.07	$774.66	$374.80	$1,047.90	$688.45
77		Intrabuilding Cbl., Exch., Metallic	62C	$22.12	$15.45	$12.61	$0.89	$19.11	$0.34	$12.05	$0.00	$6.10
78		Buried Drop	35C	$39.80	$61.61	$85.71	$132.73	$49.45	$155.08	$69.68	$192.30	$102.92
79		Aerial Drop	42C	$7.64	$11.38	$13.67	$19.59	$9.72	$21.23	$10.42	$23.47	$16.40
80		General Purpose Comp. (Billing)	361C	$0.0001	$0.0001	$0.0001	$0.0001	$0.0001	$0.0001	$0.0001	$0.0001	$0.0001
81		**Total Distribution Investment**		**$342.17**	**$533.39**	**$711.18**	**$989.79**	**$440.34**	**$1,036.36**	**$514.36**	**$1,439.20**	**$869.91**
82	Investment Cost Calculation											
83		Depreciation		$1.86	$2.92	$3.84	$5.56	$2.39	$5.83	$2.91	$8.61	$4.73
84		Cost of Money		$1.61	$2.52	$3.35	$4.67	$2.08	$4.89	$2.43	$6.82	$4.10
85		Income Tax		$0.61	$0.95	$1.27	$1.77	$0.79	$1.85	$0.92	$2.58	$1.55
86		Ad Valorem		$0.27	$0.42	$0.57	$0.79	$0.35	$0.82	$0.41	$1.14	$0.69
87		Maintenance		$1.52	$2.41	$3.23	$4.52	$1.98	$4.73	$2.32	$6.49	$3.97
88		Total Distribution Capital Costs		$5.88	$9.23	$12.25	$17.30	$7.58	$18.13	$8.99	$25.65	$15.04
89	Development of Total Product Costs											
90		Element Specific Expenses		$0.0165	$0.0165	$0.0165	$0.0165	$0.0165	$0.0165	$0.0165	$0.0165	$0.0165
91		Sub-Total Expenses		$6.28	$9.63	$12.65	$17.70	$7.98	$18.52	$9.39	$26.05	$15.44
92		TELRIC		$9.50	$12.85	$15.88	$20.92	$11.20	$21.75	$12.61	$29.27	$18.66
93		Common		$1.07	$1.07	$1.07	$1.07	$1.07	$1.07	$1.07	$1.07	$1.07
94	**Distribution TELRIC + Common**			**$10.57**	**$13.92**	**$16.95**	**$21.99**	**$12.27**	**$22.82**	**$13.69**	**$30.34**	**$19.73**

Section A - Unbundled Loop
Wire Center Loop Costs 2W

	A	B	C	AR	AS
1	South Dakota				
2	Qwest Default Values 5/30/02 9:43:47 AM				
3	**2W Wire Center Cost Calculations**				
4		**Office Name**		**Watertown**	**Yankton**
5		CLLI		WTTWSDCO	YNTNSDCO
6		Zone		3	3
7		Lines		13810	7792
8	**Total Loop Cost Calculations**				
9	Investments by Account (From Loop Module Output or Loop Length Zone Data)		FRC		
10		Poles	1C	$21.04	$23.81
11		Aerial Cbl Metallic	52C	$34.29	$40.35
12		Aerial Wire	3C	$6.57	$5.89
13		Conduit System	4C	$102.06	$100.19
14		UG Cbl Metallic	5C	$50.92	$51.30
15		Buried Cbl Metallic	45C	$592.04	$717.61
16		Intrabuilding Cbl., Exch., Metallic	62C	$8.34	$3.26
17		UG Cbl Nonmetallic	85C	$7.03	$4.46
18		Pair Gain—Digital	257C	$154.68	$188.15
19		Buried Cbl Nonmetallic	845C	$383.37	$283.08
20		Buried Drop	35C	$98.64	$128.39
21		Aerial Drop	42C	$15.01	$18.52
22		Digital Switch	377c	$27.71	$27.71
23		Land	20C	$0.88	$0.81
24		Building	110C	$36.45	$43.14
25		General Purpose Comp. (Billing)	361C	$0.0001	$0.0001
26					
27		**Total Loop Investment**		**$1,518.82**	**$1,636.67**
28	Investment Cost Calculation				
29		Depreciation		$8.54	$9.30
30		Cost of Money		$7.14	$7.66
31		Income Tax		$2.70	$2.90
32		Ad Valorem		$1.21	$1.30
33		Maintenance		$4.63	$5.26
34		Total Capital Costs		$24.21	$26.42
35	Development of Total Product Costs				
36		Element Specific Expenses		$0.0165	$0.0165
37		Sub-Total Expenses		$24.95	$27.16
38		TELRIC		$31.00	$33.21
39		Common		$2.02	$2.02
40	**Total Loop TELRIC + Common**			**$33.02**	**$35.23**
41	**Feeder Cost Calculations**				
42	Investments by Account		FRC		
43		Poles	1C	$0.00	$0.14
44		Aerial Cbl Metallic	52C	$0.00	$0.27
45		Conduit System	4C	$102.06	$100.19
46		UG Cbl Metallic	5C	$48.07	$50.12
47		Buried Cbl Metallic	45C	$0.00	$3.26
48		UG Cbl Nonmetallic	85C	$7.03	$4.46
49		Pair Gain—Digital	257C	$154.68	$188.15
50		Buried Cbl Nonmetallic	845C	$383.37	$283.08
51		Digital Switch	377C	$27.71	$27.71
52		Land	20C	$0.88	$0.81
53		Building	110C	$36.45	$43.14
54		General Purpose Comp. (Billing)	361C	$0.0001	$0.0001
55					
56		**Total Feeder Investment**		**$740.05**	**$701.33**
57	Investment Cost Calculation				
58		Depreciation		$4.18	$4.11
59		Cost of Money		$3.46	$3.25
60		Income Tax		$1.31	$1.23
61		Ad Valorem		$0.59	$0.56
62		Maintenance		$1.09	$0.99
63		Total Feeder Capital Costs		$10.63	$10.14
64	Development of Total Product Costs				
65		Element Specific Expenses		$0.0165	$0.0165
66		Sub-Total Expenses		$10.98	$10.49
67		TELRIC		$13.82	$13.33
68		Common		$0.95	$0.95
69	**Feeder TELRIC + Common**			**$14.76**	**$14.28**
70	**Distribution Cost Calculations**				
71	Investments by Account		FRC		
72		Poles	1C	$21.04	$23.67
73		Aerial Cbl Metallic	52C	$34.29	$40.08
74		Aerial Wire	3C	$6.57	$5.89
75		UG Cbl Metallic	5C	$2.85	$1.18
76		Buried Cbl Metallic	45C	$592.04	$714.35
77		Intrabuilding Cbl., Exch., Metallic	62C	$8.34	$3.26
78		Buried Drop	35C	$98.64	$128.39
79		Aerial Drop	42C	$15.01	$18.52
80		General Purpose Comp. (Billing)	361C	$0.0001	$0.0001
81		**Total Distribution Investment**		**$778.77**	**$935.33**
82	Investment Cost Calculation				
83		Depreciation		$4.37	$5.19
84		Cost of Money		$3.68	$4.41
85		Income Tax		$1.39	$1.67
86		Ad Valorem		$0.62	$0.74
87		Maintenance		$3.54	$4.27
88		Total Distribution Capital Costs		$13.59	$16.29
89	Development of Total Product Costs				
90		Element Specific Expenses		$0.0165	$0.0165
91		Sub-Total Expenses		$13.99	$16.68
92		TELRIC		$17.21	$19.91
93		Common		$1.07	$1.07
94	**Distribution TELRIC + Common**			**$18.28**	**$20.98**

	A	B	C	D	E	F
1	Qwest Default Values 5/30/02 9:43:47 AM					
2			**Unbundled Loop**			
3			**South Dakota**			
4	**Description**	**Default Source**	**Default Value**	**Overrides**	**This Run**	**Instructions**
5				AP p15		
6	Unbundled Loop Grooming Investment 2-Wire	sA p20 G9	$60.32		60.32	Enter unbundled loop grooming investment.
7	Loop Billing and Collection Expense	AP p10 F22	$0.0165		0.0165	Enter billing and collection expense per line.
8	Unbundled Loop Grooming Investment 4-Wire	sA p20 G17	$142.91		142.91	Calculated 4-Wire unbundled loop grooming investment.
9						All Investments are EFI
10	This Run equals Default Value if Overrides is empty					
11	s = section					
12	p = page					
13	c = column					
14	r = row					
15	Upper Case letter with number indicates a cell location, i.e. G40					
16						
17	The spreadsheet shows the Override data entered by the user in ICM's custom input screens. If the user					
18	has input override data, the spreadsheet will determine this and display the override data in the					
19	Overrides column. The this run column will show the Override or the Default Value if no override has					
20	been entered.					

Cell: D8
Comment: Changes in 2-wire unbundled loop grooming will automatically change the 4-wire unbundled loop grooming proportionately.

	A	B	C	D	E	F	G	H
1	**Litespan 2000 Unbundled Loop Grooming Design**							
2								
3	**State:**	**South Dakota**	**2-WIRE**				**Weighted**	
4			**Investment**		**DLC %**		**Cost**	
5					From Loop Grooming Data		cC*cE	
6	**Option 1**	CO Chan & Term	$139.89	H47	0.2684		$37.54	257C
7	**Option 2**	CO Chan & Term	$546.14	H95	0.0417		$22.78	257C
8								
9	**Weighted average demultiplexing investment per DS0**						$60.32	
10								
11								
12			**4-WIRE**				**Weighted**	
13			**Investment**		**DLC %**		**Cost**	
14	**Option 1**	CO Chan & Term	$325.45	H69	0.2684		$87.34	257C
15	**Option 2**	CO Chan & Term	$1,332.26	H118	0.0417		$55.57	257C
16								
17	**Weighted average demultiplexing investment per DS0**						$142.91	
18								
19								
20	**Per Occurrence Investment - Option 1 & 2 weighted by Lines Integrated**							
21								
22		**Option**		**Quantity**	**Option %**	**Investment**	**Wtd Invest**	
23				From Loop Grooming Data	cD/D26	C7 & C6	cE*cF	
24		Option 2		11,590	0.1345	$546.14	$73.46	
25		Option 1		74,570	0.8655	$139.89	$121.07	
26		Total		86,160	1.0000		$194.54	

	A	B	C	D	E	F	G	H
27	**South Dakota**	**LS2000 Unbundled Loop - for use with integrated TR-303 DS1s**						
28	2-WIRE	Option 1						
29	**Parts**				**Quantity**	**Unit Cost**		**Total Cost**
30	**Hardware & Commons for COT TR-008**				From Loop Grooming Data			cE*cF
31	COT 7' Bay Copper Fed				1	8,135.46		$ 8,135.46
32	COT Common Plugs Copper Fed (TR-008)				1	11,626.42		$ 11,626.42
33	COT Channel Bank Common PIE				3	1,567.38		$ 4,702.14
34	CPOTS Channel Units (Quad)				168	285.19		$ 47,912.36
35				Total				$72,376.38
36	**Software & Hardware Option**							
37	TR-303 Generic System Software				1			
38	OMAPS				1			
39				Total cost	System		H31:H33	$24,464.02
40					Channel Units		H34	$47,912.36
41								
42				At fill	System		H39/H71	37,636.95
43					Channel Units		H40/F72	56,367.48
44					Total			94,004.43
45								
46				System Capacity (DS0s)				672
47				Cost per DS0				$139.89
48								
49	4-WIRE	Option 1				From Loop Grooming Data		
50	**Parts**				**Quantity**	**Unit Cost**		**Total Cost**
51	**Hardware & Commons for COT TR-008**							cE*cF
52	COT 7' Bay Copper Fed				1	8,135.46		$ 8,135.46
53	COT Common Plugs Copper Fed (TR-008)				1	11,626.42		$ 11,626.42
54	COT Channel Bank Common PIE				3	1,567.38		$ 4,702.14
55	Universal 4 Wire Dual Card				84	725.68		$ 60,957.13
56				Total				$85,421.15
57	**Software & Hardware Option**							
58	TR-303 Generic System Software				1			
59	OMAPS				1			
60								
61				Total cost	System	H52+H53+H54		$24,464.02
62					Channel Units		H55	$60,957.13
63								
64				At fill	System		H61/F71	37,636.95
65					Channel Units		H62/F72	71,714.27
66					Total			109,351.22
67								
68				System Capacity (DS0s)			4*E55	336
69				Cost per DS0			H66/H68	$325.45
70								
71				System Fill		0.65		
72				Channel Unit Fill		0.85		
73								
74								

	A	B	C	D	E	F	G	H
75	**South Dakota**	**LS2000 Unbundled Loop - for use with integrated TR-008 DS1s**						
76	2-WIRE	Option 2				From Loop Grooming Data		
77	**Parts**				**Quantity**	**Unit Cost**		**Total Cost**
78	**Hardware & Commons for COT TR-008**							cE*cF
79	COT 7' Bay Copper Fed				1	8,135.46		$8,135.46
80	COT Common Plugs Copper Fed (TR-008)				1	11,626.42		$11,626.42
81	COT Channel Bank Common PIE				3	1,567.38		$4,702.14
82	DS1 Channel Units				56	415.74		$23,281.18
83	CPOTS Channel Units (Quad)				26	285.19		$7,415.01
84				Total				$55,160.20
85	**Software & Hardware Option**							
86	TR-303 Generic System Software				1			
87	OMAPS				1			
88	System capacity		672		Total cost	System	H79+H80+H81	$24,464.02
89	Unbundled loop %		0.15			Channel Units	H82+H83	$30,696.19
90	Unbundled loops		101			Total		$55,160.20
91	POTS channel units		26					
92								
93								
94				Working DS0s			C90	101
95				Cost per DS0			H90/H94	$546.14
96								
97								
98								
99	4-WIRE	Option 2				From Loop Grooming Data		
100	**Parts**				**Quantity**	**Unit Cost**		**Total Cost**
101	**Hardware & Commons for COT TR-008**							cE*cF
102	COT 7' Bay Copper Fed				1	8,135.46		$8,135.46
103	COT Common Plugs Copper Fed (TR-008)				1	11,626.42		$11,626.42
104	COT Channel Bank Common PIE				3	1,567.38		$4,702.14
105	DS1 Channel Units				56	415.74		$23,281.18
106	Universal 4 Wire Dual Card				26	725.68		$18,867.68
107				Total				$66,612.88
108	**Software & Hardware Option**							
109	TR-303 Generic System Software				1			
110	OMAPS				1			
111	System capacity		336		Total cost	System	H102+H103+H104	$24,464.02
112	Unbundled loop %		0.15			Channel Units	H105+H106	$42,148.86
113	Unbundled loops		50			Total		$66,612.88
114	POTS channel units		26					
115								
116								
117				Working DS0s			C113	50
118				Cost per DS0			H113/H117	$1,332.26
119								

	A	B	C	D	E	F
1	**Litespan 2000 Unbundled Loop Grooming Design**					
2						
3						
4	**State:**					**South Dakota**
5						
6	**Option 1**	**LS2000 Unbundled Loop - for use with integrated TR-303 DS1s**				
7		DLC%				26.84%
8	**Option 2**	**LS2000 Unbundled Loop - for use with integrated TR-008 DS1s**				
9		DLC%				4.17%
10						
11						
12	**Integrated Loop Demultiplexing Equipment**					
13		7 foot Bay				$8,135.46
14		Cards TR008				$11,626.42
15		Common PIE				$1,567.38
16		Quad Card				$285.19
17		DS1 Card				$415.74
18		4 Wire Card				$725.68
19		Quad ISDN Card				$860.45
20	**Line Quantities**					
21		Total				277,874
22		32 Line				10,108
23		96/192 Line				11,590
24		672/1344 Line				74,570
25		Total Demux				86,160

	A	B	C	D	E	F	G	H	I
1		South Dakota							
2		Qwest Default Values 5/30/02 9:43:47 AM							
3									
4		Feeder Model - 12 Kilofoot crossover							
5									
6		Pairs Per Site - Engineering Standard							
7									
8		**Directly Assigned Feeder**							
9	CLLI	1C	52C	4C	5C	45C	85C	257C	845C
10	ABRDSDCO	$0.00	$0.00	$99.54	$47.08	$0.00	$6.70	$167.21	$334.65
11	ARTNSDCO	$0.87	$1.69	$23.72	$8.29	$63.72	$4.03	$836.52	$1,172.74
12	BLFRSDCO	$4.43	$8.60	$27.16	$12.05	$135.32	$2.49	$592.23	$593.74
13	BLHKSDCE	$0.36	$0.70	$36.37	$9.82	$13.62	$8.59	$375.57	$395.02
14	CAVRSDCO	$2.70	$5.24	$47.23	$6.16	$164.06	$16.65	$3,981.03	$4,072.51
15	CHBLSDCO	$2.46	$4.77	$19.84	$8.39	$57.11	$2.16	$366.89	$408.31
16	CLMNSDCO	$3.29	$6.39	$43.87	$12.56	$121.36	$9.77	$1,473.21	$2,177.82
17	CNTNSDCO	$2.72	$5.28	$34.90	$13.76	$67.95	$4.64	$541.38	$697.89
18	DDWDSDCO	$1.25	$2.43	$18.05	$6.30	$78.26	$3.08	$632.03	$813.67
19	DESMSDCO	$0.44	$0.86	$25.97	$9.56	$63.32	$4.01	$886.54	$929.58
20	ELPNSDCO	$7.10	$13.79	$38.95	$13.66	$199.46	$6.59	$1,281.02	$1,575.77
21	FLNDSDCO	$5.18	$10.05	$22.22	$8.67	$149.45	$3.02	$660.02	$862.60
22	FTPRSDCE	$2.09	$4.06	$23.47	$9.57	$81.79	$2.85	$384.80	$636.95
23	HLCYSDCO	$0.55	$1.07	$12.96	$3.50	$10.05	$3.07	$980.96	$1,314.35
24	HRBGSDCO	$0.72	$1.40	$9.83	$1.90	$32.75	$2.95	$570.81	$546.87
25	HURNSDCO	$0.00	$0.00	$94.31	$46.03	$0.00	$5.15	$169.67	$192.58
26	IRQSSDCO	$3.85	$7.47	$45.97	$9.54	$88.81	$13.25	$2,375.95	$2,270.59
27	LEADSDCO	$4.88	$9.48	$20.52	$9.31	$106.91	$1.71	$629.55	$797.32
28	LKPRSDCO	$3.62	$7.04	$31.48	$10.20	$80.28	$6.03	$1,440.42	$1,692.81
29	MCINSDCO	$6.71	$13.03	$53.67	$15.36	$281.65	$11.96	$2,087.46	$2,881.53
30	MDSNSDCE	$0.00	$0.00	$112.93	$49.41	$0.00	$10.92	$255.33	$355.53
31	MLBNSDCO	$0.00	$0.00	$84.36	$34.64	$0.00	$10.05	$374.74	$657.28
32	MLLRSDCO	$2.39	$4.65	$21.20	$8.17	$104.95	$2.98	$1,107.93	$1,109.72
33	MRTWSDCO	$1.91	$3.70	$61.59	$16.43	$111.51	$14.72	$3,357.09	$3,147.76
34	MTCHSDCO	$0.00	$0.00	$104.73	$46.45	$0.00	$9.61	$163.33	$369.95
35	PIRRSDCO	$0.00	$0.00	$92.06	$46.36	$0.00	$3.85	$129.21	$149.83
36	RDFDSDCO	$0.00	$0.00	$142.00	$59.52	$0.00	$15.91	$883.53	$1,188.52
37	RPCYSDCO	$0.00	$0.00	$86.56	$36.35	$0.00	$9.64	$151.29	$100.84
38	RPVYSDCO	$0.00	$0.00	$133.99	$62.29	$0.00	$9.91	$239.70	$341.33
39	SPRFSDCO	$0.34	$0.66	$87.63	$40.17	$7.29	$6.96	$241.49	$359.11
40	STRGSDCO	$1.10	$2.13	$107.37	$48.06	$24.80	$9.48	$505.13	$575.79
41	SXFLSDCO	$0.00	$0.00	$66.72	$33.69	$0.00	$2.71	$86.25	$6.78
42	SXFLSDSE	$0.00	$0.00	$5.39	$0.00	$0.00	$2.49	$206.47	$51.50
43	SXFLSDSW	$0.00	$0.00	$119.78	$60.09	$0.00	$5.19	$65.98	$50.13
44	TEA-SDCO	$5.77	$11.21	$20.24	$8.18	$108.72	$2.53	$274.62	$239.82
45	TMLKSDCO	$6.64	$12.89	$34.21	$9.17	$131.51	$8.13	$1,915.09	$2,114.27
46	VOLGSDCO	$6.06	$11.76	$22.07	$8.68	$133.05	$2.95	$845.63	$1,212.52
47	VRMLSDCO	$0.00	$0.00	$79.81	$38.97	$6.72	$4.35	$103.70	$184.34
48	WHWDSDCO	$2.96	$5.74	$62.36	$15.86	$114.11	$15.54	$1,679.34	$1,860.39
49	WRWKSDCO	$0.49	$0.96	$49.02	$14.90	$9.81	$10.19	$398.76	$373.76

Section A - Unbundled Loop
Loop Module Output

	A	B	C	D	E	F	G	H	I
1		South Dakota							
2		Qwest Default Values 5/30/02 9:43:47 AM							
3									
4		Feeder Model - 12 Kilofoot crossover							
5									
6		Pairs Per Site - Engineering Standard							
7									
8		**Directly Assigned Feeder**							
9	**CLLI**	**1C**	**52C**	**4C**	**5C**	**45C**	**85C**	**257C**	**845C**
50	WTTWSDCO	$0.00	$0.00	$102.06	$48.07	$0.00	$7.03	$154.68	$363.37
51	YNTNSDCO	$0.14	$0.27	$100.19	$50.12	$3.26	$4.46	$188.15	$283.08

South Dakota

Qwest Default Values 5/30/02 9:43:47 AM

	62C	35C	42C
NID Investments	$12.95	$25.33	$4.09

Directly Assigned Distribution

CLLI	1C	52C	3C	5C	45C	62C	35C	42C
ABRDSDCO	$15.77	$27.73	$2.90	$4.21	$526.93	$13.57	$78.73	$12.60
ARTNSDCO	$66.11	$89.08	$39.29	$2.30	$1,145.69	$7.95	$151.03	$18.92
BLFRSDCO	$38.96	$55.31	$20.36	$2.84	$778.69	$9.74	$132.58	$17.31
BLHKSDCE	$26.34	$44.89	$6.25	$2.15	$816.87	$7.12	$124.08	$17.57
CAVRSDCO	$12.29	$23.87	$0.00	$0.80	$490.13	$2.12	$80.08	$15.74
CHBLSDCO	$23.78	$43.15	$3.04	$1.23	$835.90	$3.76	$126.53	$18.57
CLMNSDCO	$5.61	$10.90	$0.00	$8.20	$248.60	$28.24	$32.97	$6.48
CNTNSDCO	$31.47	$51.02	$10.09	$1.36	$866.92	$4.54	$148.81	$19.76
DDWDSDCO	$27.32	$42.21	$10.84	$1.46	$670.01	$4.69	$135.50	$18.76
DESMSDCO	$35.82	$58.70	$10.87	$0.29	$1,015.11	$0.61	$146.89	$20.58
ELPNSDCO	$38.55	$57.59	$17.27	$0.00	$862.16	$0.00	$174.72	$22.57
FLNDSDCO	$85.43	$112.78	$53.12	$1.04	$1,402.12	$3.19	$128.50	$18.53
FTPRSDCE	$31.44	$53.23	$7.83	$0.22	$951.84	$0.45	$152.19	$21.00
HLCYSDCO	$46.14	$68.58	$21.02	$0.28	$1,036.67	$0.55	$162.23	$21.43
HRBGSDCO	$22.20	$39.95	$3.16	$2.98	$770.21	$10.28	$117.14	$16.43
HURNSDCO	$16.21	$28.43	$3.04	$2.86	$532.67	$9.26	$94.34	$14.92
IRQSSDCO	$20.81	$40.41	$0.00	$0.27	$825.61	$0.58	$137.43	$20.13
LEADSDCO	$42.30	$66.13	$16.01	$0.26	$1,072.98	$0.84	$160.34	$21.42
LKPRSDCO	$37.88	$63.14	$10.41	$0.00	$1,108.71	$0.00	$167.77	$22.21
MCINSDCO	$10.55	$20.49	$0.00	$2.73	$427.31	$8.92	$67.83	$13.34
MDSNSDCE	$11.60	$21.94	$0.59	$3.42	$442.43	$9.58	$73.28	$12.63
MLBNSDCO	$25.11	$43.96	$4.81	$0.57	$814.29	$1.62	$136.30	$19.71
MLLRSDCO	$17.16	$33.33	$0.00	$0.64	$686.95	$1.24	$113.86	$18.33
MRTWSDCO	$10.97	$21.30	$0.00	$2.27	$442.34	$7.29	$70.76	$13.91
MTCHSDCO	$12.93	$24.55	$0.57	$3.16	$501.26	$10.58	$78.39	$13.68
PIRRSDCO	$8.43	$14.34	$2.02	$7.99	$276.64	$23.98	$38.00	$6.16
RDFDSDCO	$64.86	$92.43	$33.53	$0.00	$1,305.38	$0.00	$189.62	$23.33
RPCYSDCO	$14.81	$26.79	$1.98	$3.45	$522.83	$10.78	$82.65	$13.58
RPVYSDCO	$19.92	$37.30	$1.40	$0.61	$744.56	$1.25	$114.95	$18.36
SPRFSDCO	$26.61	$45.64	$6.03	$0.22	$822.93	$0.53	$146.44	$20.63
STRGSDCO	$32.41	$53.85	$9.08	$0.18	$940.64	$0.33	$156.72	$21.35
SXFLSDCO	$5.87	$11.40	$0.01	$6.87	$248.47	$22.12	$39.80	$7.64
SXFLSDSE	$11.28	$20.45	$1.46	$4.58	$407.17	$15.45	$61.61	$11.38
SXFLSDSW	$13.62	$26.44	$0.00	$3.87	$555.25	$12.61	$85.71	$13.67
TEA-SDCO	$27.40	$44.55	$8.66	$0.34	$755.62	$0.89	$132.73	$19.59
TMLKSDCO	$7.95	$15.44	$0.00	$5.61	$333.07	$19.11	$49.45	$9.72
VOLGSDCO	$28.90	$46.65	$9.47	$0.04	$774.66	$0.34	$155.08	$21.23
VRMLSDCO	$14.43	$22.76	$5.27	$4.94	$374.80	$12.05	$69.68	$10.42
WHWDSDCO	$59.67	$81.32	$34.55	$0.00	$1,047.90	$0.00	$192.30	$23.47
WRWKSDCO	$18.39	$34.35	$1.36	$1.95	$688.45	$6.10	$102.92	$16.40

South Dakota

Qwest Default Values 5/30/02 9:43:47 AM

	62C	35C	42C
NID Investments	$12.95	$25.33	$4.09

Directly Assigned Distribution

CLLI	1C	52C	3C	5C	45C	62C	35C	42C
WTTWSDCO	$21.04	$34.29	$6.57	$2.85	$592.04	$8.34	$98.64	$15.01
YNTNSDCO	$23.67	$40.08	$5.89	$1.18	$714.35	$3.26	$128.39	$18.52

South Dakota

Qwest Default Values 5/30/02 9:43:47 AM

CLLI	Number of Loops	Average Length	Percent DLC	Zone	Office Name
ABRDSDCO	20,161	13,759	24%	3	Aberdeen
ARTNSDCO	1,225	24,222	35%	3	Arlington
BLFRSDCO	2,221	14,993	13%	3	Belle Fourche
BLHKSDCE	4,174	41,132	95%	2	Blackhawk
CAVRSDCO	282	41,586	88%	3	Cavour
CHBLSDCO	2,397	11,135	23%	3	Chamberlain
CLMNSDCO	468	15,038	32%	3	Colman
CNTNSDCO	1,193	10,981	14%	3	Canton
DDWDSDCO	1,804	22,414	41%	3	Deadwood
DESMSDCO	1,139	15,968	20%	3	Desmet
ELPNSDCO	694	23,161	30%	3	Elk Point
FLNDSDCO	1,635	21,010	23%	3	Flandreau
FTPRSDCE	1,645	11,514	5%	3	Ft Pierre
HLCYSDCO	1,974	31,087	65%	3	Hill City
HRBGSDCO	1,102	27,638	94%	1	Harrisburg
HURNSDCO	9,726	11,343	14%	3	Huron
IRQSSDCO	373	27,268	51%	3	Iroquois
LEADSDCO	1,482	20,001	26%	3	Lead
LKPRSDCO	779	21,708	32%	3	Lake Preston
MCINSDCO	297	36,839	39%	3	Mcintosh
MDSNSDCE	4,594	10,460	15%	3	Madison
MLBNSDCO	3,699	14,736	21%	3	Milbank
MLLRSDCO	1,619	21,638	28%	3	Miller
MRTWSDCO	233	37,823	70%	3	Morristown
MTCHSDCO	11,104	10,459	10%	3	Mitchell
PIRRSDCO	14,965	13,311	36%	3	Pierre
RDFDSDCO	2,881	30,019	32%	3	Redfield
RPCYSDCO	40,256	16,492	51%	2	Rapid City
RPVYSDCO	3,839	12,622	16%	2	Rapid Valley
SPRFSDCO	5,534	12,453	15%	3	Spearfish
STRGSDCO	2,868	17,142	25%	3	Sturgis
SXFLSDCO	74,995	11,792	41%	1	Sioux Falls Main
SXFLSDSE	4,262	31,200	100%	1	Sioux Falls Southeast
SXFLSDSW	14,821	11,649	22%	1	Sioux Falls Southwest
TEA-SDCO	1,100	17,310	44%	1	Tea
TMLKSDCO	562	23,425	34%	3	Timber Lake
VOLGSDCO	1,330	26,171	39%	3	Volga
VRMLSDCO	8,743	8,155	6%	3	Vermillion
WHWDSDCO	310	23,919	50%	3	Whitewood
WRWKSDCO	3,786	18,981	83%	2	Warwick

	A	R	S	T	U	V
1		South Dakota				
2		Qwest Default Values 5/30/02 9:43:47 AM				
3						
4						
5						
6						
7						
8						
9	CLLI	Number of Loops	Average Length	Percent DLC	Zone	Office Name
50	WTTWSDCO	13,810	13,765	20%	3	Watertown
51	YNTNSDCO	7,792	14,239	15%	3	Yankton

South Dakota

Qwest Default Values 5/30/02 9:43:47 AM

	Directly Assigned Feeder								Directly Assigned Distribution								
Zone	1C	52C	4C	5C	45C	85C	257C	845C	1C	52C	3C	5C	45C	62C	35C	42C	Number of Loops
1	$0.00	$0.00	$0.00	$0.00	$0.00	$0.00	$0.00	$0.00	$0.00	$0.00	$0.00	$0.00	$0.00	$0.00	$0.00	$0.00	0
2	$0.00	$0.00	$0.00	$0.00	$0.00	$0.00	$0.00	$0.00	$0.00	$0.00	$0.00	$0.00	$0.00	$0.00	$0.00	$0.00	0
3	$0.00	$0.00	$0.00	$0.00	$0.00	$0.00	$0.00	$0.00	$0.00	$0.00	$0.00	$0.00	$0.00	$0.00	$0.00	$0.00	0
4	$0.00	$0.00	$0.00	$0.00	$0.00	$0.00	$0.00	$0.00	$0.00	$0.00	$0.00	$0.00	$0.00	$0.00	$0.00	$0.00	0
5	$0.00	$0.00	$0.00	$0.00	$0.00	$0.00	$0.00	$0.00	$0.00	$0.00	$0.00	$0.00	$0.00	$0.00	$0.00	$0.00	0
Avg	$0.00	$0.00	$0.00	$0.00	$0.00	$0.00	$0.00	$0.00	$0.00	$0.00	$0.00	$0.00	$0.00	$0.00	$0.00	$0.00	

Section B - Exte[illegible]on Technology
Ext Tech - Dev Total Prod Costs

Row	Qwest Default Values 5/30/02 9:43:47 AM South Dakota	Source or Calculation	Factor Value [AP p1 cB]	Extension Technology 2-Wire	Extension Technology Unbundled Loop Grooming 2-Wire
			A	B	B
1	**Investment**	sB p2 D28		217.63	98.53
2					
3	Investment Based Costs (IBC)	sB p2 J28		3.36	1.63
4	Element Specific Expenses			0.0165	0.0165
5	***Total IBC + Element Specific Expenses***	*r3 + r4*		3.38	1.64
6					
7	***Marketing & Business Fees***				
8	Product Management Expense	cA*r5	0.01996	0.0675	0.0328
9	Sales Expense	cA*r5	0.01188	0.0402	0.0195
10	Product Advertising Expense	cA*r5	0.00000	0.0000	0.0000
11	Business Fees (Other Operating Taxes)	cA*(r5+r8:r10)	0.00148	0.0052	0.0025
12	***Marketing & Business Fees Total***	*Sum r8:r11*		0.1128	0.0548
13					
14	***Sub-Total Expenses***	*r5 + r12*		3.49	1.70
15					
16	***Other Direct Expenses***				
17	Network Operations	cA*r14	0.03483	0.1217	0.0591
18	Network Support Assets	cA*r14	0.01470	0.0514	0.0249
19	General Support Assets	cA*r14	0.08874	0.3100	0.1505
20	General Purpose Computers	cA*r14	0.04334	0.1514	0.0735
21	Uncollectible - Interconnect	cA*r14	0.00379	0.0132	0.0064
22	Accounting and Finance Expense	cA*r14	0.00735	0.0257	0.0125
23	Human Resources Expense	cA*r14	0.00829	0.0290	0.0141
24	Information Management Expense	cA*r14	0.07089	0.2476	0.1202
25	Intangibles	cA*r14	0.00000	0.0000	0.0000
26	***Total Other Direct Expenses***	*Sum r17:r25*		0.9500	0.4613
27					
28	***Total Element Long Run Incremental Costs***	*r 14 + r26*		4.44	2.16
29					
30	***Common***				
31	Executive Expense	cA*r28	0.01127	0.050065767	0.024310903
32	Planning Expense	cA*r28	0.00053	0.002334295	0.001133485
33	External Relations Expense	cA*r28	0.03785	0.168164783	0.081657345
34	Legal Expense	cA*r28	0.00472	0.020961132	0.010178293
35	Other Procurement Expense	cA*r28	0.00186	0.008262532	0.004012115
36	Research and Development Expense	cA*r28	0.00001	2.6098E-05	1.26726E-05
37	Other General and Admin Exp	cA*r28	0.01506	0.066934345	0.032501936
38	***Total Common Costs***	*Sum r31:r37*		0.3167	0.1538
39					
40	***TELRIC + Common***	*r27 + r38*		**4.76**	**2.31**

c = column, r = row, s = section, p = page, AP = Appendix

	A	B	C	D	E	F	G	H	I	J
1	Qwest Default Values 5/30/02 9:43:47 AM									
2	South Dakota					**Extension Technology**				
3	**Acct**	**FRC**	**Account Name**	**Investment**	**Depreciation**	**Cost of Money**	**Income Tax**	**Ad Valorem**	**Maintenance**	**Total Capital Costs**
4	**Unbundled Loop (2 wire)**				cD*(AP p7 cA)/12	cD*(AP p7 cB)/12	cD*(AP p7 cC)/12	cD*(AP p7 cD)/12	cD*(AP p7 cE)/12	sum(cE:cI)
5	2111	20C	Land	0.67	0.0000000	0.0054272	0.0020524	0.0005368	0.0007182	0.0087345
6	2121	110C	Building	36.13	0.0777522	0.2254467	0.0852558	0.0287461	0.0384542	0.4556550
7	2232.2	257C	Pair Gain—Digital	180.82	1.6532971	0.6849405	0.2590196	0.1438508	0.1586537	2.8997617
8	2411	1C	Poles	0.00	0.0000000	0.0000000	0.0000000	0.0000000	0.0000000	0.0000000
9	2421.11,.21	52C	Aerial Cbl Metallic	0.00	0.0000000	0.0000000	0.0000000	0.0000000	0.0000000	0.0000000
10	2421.11	42C	Aerial Drop	0.00	0.0000000	0.0000000	0.0000000	0.0000000	0.0000000	0.0000000
11	2422.11,.21	5C	UG Cbl Metallic	0.00	0.0000000	0.0000000	0.0000000	0.0000000	0.0000000	0.0000000
12	2422.12,.22	85C	UG Cbl Nonmetallic	0.00	0.0000000	0.0000000	0.0000000	0.0000000	0.0000000	0.0000000
13	2423.11,.21	45C	Buried Cbl Metallic	0.00	0.0000000	0.0000000	0.0000000	0.0000000	0.0000000	0.0000000
14	2423.11	35C	Buried Drop	0.00	0.0000000	0.0000000	0.0000000	0.0000000	0.0000000	0.0000000
15	2423.12,.22	845C	Buried Cbl Nonmetallic	0.00	0.0000000	0.0000000	0.0000000	0.0000000	0.0000000	0.0000000
16	2426.1	62C	Intrabuilding Cbl., Exch., Metallic	0.00	0.0000000	0.0000000	0.0000000	0.0000000	0.0000000	0.0000000
17	2426.2	862C	Intrabuilding Cbl., Exch., Nonmetallic	0.00	0.0000000	0.0000000	0.0000000	0.0000000	0.0000000	0.0000000
18	2431	3C	Aerial Wire	0.00	0.0000000	0.0000000	0.0000000	0.0000000	0.0000000	0.0000000
19	2441	4C	Conduit System	0.00	0.0000000	0.0000000	0.0000000	0.0000000	0.0000000	0.0000000
20			**Total**	**217.63**	**1.73**	**0.92**	**0.35**	**0.17**	**0.20**	**$ 3.36**
21										
22	**Unbundled Loop Grooming**									
23	2111	20C	Land	0.31	0.0000000	0.0024570	0.0009291	0.0002430	0.0003251	0.0039543
24	2121	110C	Building	16.36	0.0352002	0.1020648	0.0385972	0.0130140	0.0174091	0.2062852
25	2232.3	357C	Other Digital Equipment	81.86	0.7484845	0.3100878	0.1172640	0.0651245	0.1738902	1.4148510
26			**Total**	**98.53**	**0.78**	**0.41**	**0.16**	**0.08**	**0.19**	**$ 1.63**
27	**Billing**									
28	2124	361C	General Purpose Comp. (Billing)	**0.0001123**	**0.0000015**	**0.0000004**	**0.0000002**	**0.0000001**	**0.0000000**	**0.0000022**
29										
30	**Total 2-wire Ext. Tech. With Grooming**			**316.16**	**2.51**	**1.33**	**0.50**	**0.25**	**0.39**	**4.99**
31	**Investment Sources**									
32	Land = (AP p12 B10) * (377C + 57C+257C+257CS+357C+357CS)						Building = (AP p12 C10) *(377C+57C+257C+257CS+357C+357CS)			
33	Unbundled Loop = sB p4 cE						Unbundled Loop Grooming = sB p7 H33			

	A	B	C	D	E	F	G	H
1	**Unbundled Loop Grooming Design POTS**							
2								
3						**State Name**	South Dakota	
4	**State:**	**South Dako**	2-WIRE					**Weighted**
5			**Investment**		**DLC %**			**Investment**
6	**Option 1**	UDLC	$139.8875	257C	0.2684		C6*E6	$37.5401
7								
8								
9								
10	**Option 2**	UDLC	$546.1406	257C	0.0417		C10*E10	$22.7792
11								
12								
13								
14	**Weighted average demultiplexing investment per DS0 for POTS**						H6+H10	$60.3193
15								
16	**Unbundled Loop Grooming Design BRI ISDN**							
17								
18	**State:**	**South Dako**	2-WIRE					**Weighted**
19			**Investment**		**DLC %**			**Investment**
20	**Option 1**	UDLC	$83.7454	257C	0.2684		C20*E20	$22.4739
21								
22								
23								
24	**Option 2**	UDLC	$597.4745	257C	0.0417		C24*E24	$24.9203
25								
26								
27								
28	**Weighted average demultiplexing investment per DS0 for BRI ISDN**						H20+H24	$47.3942
29								
	Incremental additional Investment per DS0 between POTS and BRI ISDN 1st Channel						H28-H14	($12.9252)
	Incremental Investment per DS0 BRI ISDN for 2 Additional Channels						2*H28	$94.7884
32								
33	**Incremental additional Investment for DS0s for BRI ISDN Total for 3 Channels**						H30+H31	$81.8632
44								
45	**South Dakota**		**Unbundled Loop Grooming - for use with integrated TR-303 DS1s**					
46	2-WIRE POTS							
47	**Parts**				**Quantity**	**Unit Investment**		**Total Investment**
48	**Hardware & Commons for COT TR-008**					sA - Loop Grooming data		
49	COT 7' Bay Copper Fed				1	$8,135.4570	E49*F49	$8,135.4570
50	COT Common Plugs Copper Fed (TR-008)				1	$11,626.4232	E50*F50	$11,626.4232
51	COT Channel Bank Common PIE				3	$1,567.3785	E51*F51	$4,702.1355
52	CPOTS Channel Units (Quad Cards)				168	$285.1926	E52*F52	$47,912.3617
53				Total			SUM(H49:H52)	$72,376.3774
54	**Software & Hardware Option**							
55	TR-303 Generic System Software				1			
56	OMAPS				1			
57								
58				Total cost	System		H49+H50+H51	$24,464.0156
59					Channel Units		H52	$47,912.3617
60								
61	System Fill		0.65	At fill	System		H58/C61	$37,636.9471
62	Channel Unit Fill		0.85		Channel Units		H59/C62	$56,367.4844
63					Total		H61+H62	$94,004.4315
64								
65				System Capacity (DS0s)			[=4*E52]	672
66				Cost per DS0			[=H63/H65]	$139.8875
67								
	System used to demuliplex DS0s from integrated TR-303 DS1s							
70	**South Dakota**		**Unbundled Loop Grooming - for use with integrated TR-008 DS1s**					

	A	B	C	D	E	F	G	H
71	2-WIRE POTS							
72	**Parts**				**Quantity**	**Unit Investment**		**Total Investment**
73	**Hardware & Commons for COT TR-008**					sA - Loop Grooming data		
74	COT 7' Bay Copper Fed				1	$8,135.4570	E74*F74	$8,135.4570
75	COT Common Plugs Copper Fed (TR-008)				1	$11,626.4232	E75*F75	$11,626.4232
76	COT Channel Bank Common PIE				3	$1,567.3785	E76*F76	$4,702.1355
77	DS1 Channel Units				56	$415.7353	E77*F77	$23,281.1776
78	CPOTS Channel Units (Quad Cards)				26	$285.1926	E78*F78	$7,415.0084
79				Total			SUM(H74:H78)	$55,160.2016
80	**Software & Hardware Option**							
81	TR-303 Generic System Software				1			
82	OMAPS				1			
83								
84	System capacity		672		Total cost	System	H74+H75+H76	$24,464.0156
85	Unbundled loop %		0.15			Channel Units	H77+H78	$30,696.1859
86	Unbundled loops		101			Total		$55,160.2016
87	POTS channel units		26					
88								
89				Working DS0s			[=C42]	101
90				Cost per DS0			[=H42/H45]	$546.1406
91								
92	System used to demuliplex DS0s from integrated TR-008 DS1s							
93								
94	**South Dakota**	**Unbundled Loop Grooming - for use with integrated TR-303 DS1s**						
95	2-WIRE BRI ISDN							
96	**Parts**				**Quantity**	**Unit Investment**		**Total Investment**
97	**Hardware & Commons for COT TR-008**					sA - Loop Grooming data		
98	COT 7' Bay Copper Fed				1	$8,135.4570	E98*F98	$8,135.4570
99	COT Common Plugs Copper Fed (TR-008)				1	$11,626.4232	E99*F99	$11,626.4232
100	COT Channel Bank Common PIE				3	$1,567.3785	E100*F100	$4,702.1355
101	ISDN Channel Units (Quad Cards)				90	$285.1926	E101*F101	$25,667.3366
102				Total			SUM(H98:H101)	$50,131.3523
103	**Software & Hardware Option**							
104	TR-303 Generic System Software				1			
105	OMAPS				1			
106								
107				Total cost	System		H98+H99+H100	$24,464.0156
108					Channel Units		H101	$25,667.3366
109								
110	System Fill		0.65	At fill	System		H107/C110	$37,636.9471
111	Channel Unit Fill		0.85		Channel Units		H108/C111	$30,196.8666
112					Total		H110+H111	$67,833.8138
113								
114	TR-303 uses 2.25 time slots for BRI ISDN			System Capacity (DS0s)			[=(4*E101)*2.25]	810
115				Cost per DS0			[=H112/H114]	$83.7454
116	System used to demuliplex DS0s from integrated TR-303 DS1s							
117								
118	**South Dakota**	**Unbundled Loop Grooming - for use with integrated TR-008 DS1s**						
119	2-WIRE BRI ISDN							
120	**Parts**				**Quantity**	**Unit Investment**		**Total Investment**
121	**Hardware & Commons for COT TR-008**							
122	COT 7' Bay Copper Fed				1	$8,135.4570	E122*F122	$8,135.4570
123	COT Common Plugs Copper Fed (TR-008)				1	$11,626.4232	E123*F123	$11,626.4232
124	COT Channel Bank Common PIE				3	$1,567.3785	E124*F124	$4,702.1355
125	DS1 Channel Units				56	$415.7353	E125*F125	$23,281.1776
126	CISDN Channel Units (Quad Cards)				57	$860.4503	E126*F126	$49,045.6690
127				Total			SUM(H122:H126)	$96,790.8622
128	**Software & Hardware Option**							
129	TR-303 Generic System Software				1			
130	OMAPS				1			

	A	B	C	D	E	F	G	H
131								
132	System Capacity, BRI Lines		360	[=(30*3)*4]	Total cost	System	H122+H123+H124	$24,464.0156
133	Unbundled loop %		0.15			Channel Units	H125+H126	$72,326.8466
134	Unbundled loops		54			Total	H125+H126	$96,790.8622
135	ISDN Quad channel units		57					
136								
137	TR-008 uses 3 time slots for BRI ISDN			Working DS0s			[=C134*3]	162
138				Cost per DS0			[=H134/H137]	$597.4745
139								
140	System used to demuliplex DS0s from integrated TR-008 DS1s							

Cell: G114
Comment: the calculation represents the following:
30 BRI Quad cards times 3 channel banks times 4 bri lines per quad card times 2.25. Gives total DS0 time slot capacity. Per Peggy Speight 7/22/97.

L Stolper

Cell: D132
Comment: the calculation represents the following:
30 BRI Quad cards times 3 channel banks times 4 bri lines per quad card.
Per Peggy Speight 7/22/97.

L Stolper

	A	B	C	D	E
1	Qwest Default Values 5/30/02 9:43:47 AM				
2	South Dakota				
3			Extension Technology Calculation		
4	**FRC**	**Description**	**POTS**	**ISDN**	**Extention Technology (ISDN - POTS)**
5	1C	Poles	$0.00	$0.00	$0.00
6	52C	Aerial Cable	$0.00	$0.00	$0.00
7	3C	C Wire	$0.00	$0.00	$0.00
8	4C	Conduit	$17.33	$17.33	$0.00
9	5C	Underground Cable	$0.00	$0.00	$0.00
10	45C	Buried Cable	$0.00	$0.00	$0.00
11	62C	Building Cable	$0.00	$0.00	$0.00
12	85C	Underground Fiber	$7.99	$7.99	$0.00
13	257C	Pair Gain	$371.36	$552.19	$180.82
14	845C	Buried Fiber	$264.16	$264.16	$0.00
15	852C	Aerial Fiber	$0.00	$0.00	$0.00
16	862C	Building Fiber	$0.00	$0.00	$0.00
17	35C	Buried Drop	$0.00	$0.00	$0.00
18	42C	Aerial Drop	$0.00	$0.00	$0.00
19		Total Investment	$660.85	$841.67	$180.82
20					
21					
22	Investments are Outputs from the Loop Module				

Section C - Line and Trunk Ports
Port- Developmental Prod Costs

Row	Qwest Default Values 5/30/02 9:43:47 AM South Dakota	Line Ports Source or Calculation	Factor Value [AP p1 cB]	Line and Trunk Ports DS0 Analog Line Port	DS0 Trunk Port	DS1 Trunk Port	ISDN BRI Port	ISDN PRI Port	DID/PBX Trunk Port
			A	B	C	D	E	F	G
1	**Investment**	sC p2-3 cD Total	sC p2-3 cD	72.23	1009.62	4081.23	360.43	9069.13	188.50
2									
3	Investment Based Costs (IBC)	sC p2-3 cK Total	sC p2-3 cJ	1.1098016	15.58508655	62.71078505	5.53888147	139.35316501	2.89671444
4	Element Specific Expenses	sC p4	sC p4-5	0.0164665	0.01646653	0.01646653	2.05245237	0.01646653	0.01646653
5	***Total IBC + Element Specific Expenses***	*r3 + r4*		**1.1262681**	**15.6015531**	**62.7272516**	**7.5913338**	**139.3696315**	**2.9131810**
6									
7	***Marketing & Business Fees***								
8	Product Management Expense	cA*r5	0.01996	0.0224772	0.3113635	1.2518612	0.1515019	2.7814297	0.0581390
9	Sales Expense	cA*r5	0.01188	0.0133770	0.1853037	0.7450277	0.0901642	1.6553289	0.0346006
10	Product Advertising Expense	cA*r5	0.00000	0.0000000	0.0000000	0.0000000	0.0000000	0.0000000	0.0000000
11	Business Fees (Other Operating Taxes)	cA*(r5+r8:r10)	0.00148	0.0017236	0.0238756	0.0959936	0.0116173	0.2132819	0.0044581
12	***Marketing & Business Fees Total***	*Sum r8:r11*		0.0375777	0.5205428	2.0928825	0.2532834	4.6500405	0.0971977
13									
14	***Sub-Total Expenses***	*r5 + r12*		1.1638458	16.1220958	64.8201340	7.8446172	144.0196720	3.0103787
15									
16	***Other Direct Expenses***								
17	Network Operations	cA*r14	0.03483	0.0405389	0.5615619	2.2578029	0.2732423	5.0164665	0.1048570
18	Network Support Assets	cA*r14	0.01470	0.0171126	0.2370508	0.9530811	0.1153431	2.1175894	0.0442630
19	General Support Assets	cA*r14	0.08874	0.1032822	1.4307095	5.7522784	0.6961482	12.7806162	0.2671475
20	General Purpose Computers	cA*r14	0.04334	0.0504436	0.6987660	2.8094428	0.3400024	6.2421195	0.1304762
21	Uncollectible - Interconnect	cA*r14	0.00379	0.0044063	0.0610374	0.2454056	0.0296993	0.5452508	0.0113971
22	Accounting and Finance Expense	cA*r14	0.00735	0.0085494	0.1184293	0.4761542	0.0576248	1.0579363	0.0221136
23	Human Resources Expense	cA*r14	0.00829	0.0096526	0.1337116	0.5375978	0.0650608	1.1944538	0.0249671
24	Information Management Expense	cA*r14	0.07089	0.0825014	1.1428452	4.5948975	0.5560805	10.2091063	0.2133964
25	Intangibles	cA*r14	0.00000	0.0000000	0.0000000	0.0000000	0.0000000	0.0000000	0.0000000
26	***Total Other Direct Expenses***	*Sum r17:r25*		0.3164868	4.3841117	17.6266603	2.1332014	39.1635387	0.8186179
27									
28	***Total Element Long Run Incremental Costs***	*r 14 + r26*		**1.4803326**	**20.5062075**	**82.4467943**	**9.9778186**	**183.1832108**	**3.8289966**
29									
30	***Common***								
31	Executive Expense	cA*r28	0.01127	0.0166796	0.2310534	0.9289680	0.1124249	2.0640141	0.0431432
32	Planning Expense	cA*r28	0.00053	0.0007777	0.0107728	0.0433127	0.0052418	0.0962338	0.0020115
33	External Relations Expense	cA*r28	0.03785	0.0560248	0.7760801	3.1202899	0.3776216	6.9327708	0.1449126
34	Legal Expense	cA*r28	0.00472	0.0069833	0.0967356	0.3889329	0.0470692	0.8641448	0.0180628
35	Other Procurement Expense	cA*r28	0.00186	0.0027527	0.0381316	0.1533109	0.0185539	0.3406316	0.0071201
36	Research and Development Expense	cA*r28	0.00001	0.0000087	0.0001204	0.0004842	0.0000586	0.0010759	0.0000225
37	Other General and Admin Exp	cA*r28	0.01506	0.0222995	0.3089018	1.2419637	0.1503041	2.7594391	0.0576793
38	***Total Common Costs***	*Sum r31:r37*		**0.1055263**	**1.4617956**	**5.8772625**	**0.7112740**	**13.0583101**	**0.2729520**
39									
40	***TELRIC + Common***	*r27 + r38*		**1.5859**	**21.9680**	**88.3241**	**10.6891**	**196.2415**	**4.1019**

c = column, r = row, s = section, p = page, AP = Appendix

Section C - Line and Trunk Ports
Port-Investment Cost Calc

	A	B	C	D	E	F	G	H	I	J
1	Qwest Default Values 5/30/02 9:43:47 AM					Line and Trunk Ports				
2	South Dakota			Investment	Depreciation	Cost of Money	Income Tax	Ad Valorem	Maintenance	Total Capital Costs
3	Acct	FRC	Account Name		cD*(AP p7 cA)/12	cD*(AP p7 cB)/12	cD*(AP p7 cC)/12	cD*(AP p7 cD)/12	cD*(AP p7 cE)/12	sum(cE:cI)
4	DS0 Analog Line Port									
5	2111	20C	Land	0.2239568	0.0000000	0.0018011	0.0006811	0.0001782	0.0002383	0.0028987
6	2121	110C	Building	11.9919593	0.0258036	0.0748188	0.0282938	0.0095399	0.0127618	0.1512178
7	2124	361C	General Purpose Comp.	0.000112344	0.0000015	0.0000004	0.0000002	0.0000001	0.0000000	0.000002247
8	2212	377C	Digital Switch	60.0100000	0.5446421	0.2272618	0.0859421	0.0477396	0.0500971	0.9556828
9			**Total**	**72.2260285**	**0.5704472**	**0.3038821**	**0.1149172**	**0.0574578**	**0.0630972**	**1.1098016**
10	DS0 Trunk Port									
11	2111	20C	Land	3.130597623	0.0000000	0.0251769	0.0095210	0.0024905	0.0033316	0.040519952
12	2121	110C	Building	167.630527541	0.3606970	1.0458604	0.3955064	0.1333548	0.1783914	2.113809964
13	2212	377C	Digital Switch	192.9394829	1.7510910	0.7306743	0.2763145	0.1534888	0.1610684	3.072636989
14		257C	Pair Gain—Digital	645.9149280	5.9056734	2.4466471	0.9252331	0.5138434	0.5667204	10.358117399
15	2124	361C	General Purpose Comp.	0.000112344	0.0000015	0.0000004	0.0000002	0.0000001	0.0000000	0.000002247
16			**Total**	**1009.62**	**8.0174629**	**4.2483592**	**1.6065751**	**0.8031775**	**0.9095118**	**15.5851**
17	DS1 Trunk Port									
18	2111	20C	Land	12.654996948	0.0000000	0.1017741	0.0384873	0.0100674	0.0134674	0.163796160
19	2121	110C	Building	677.622636300	1.4580664	4.2277422	1.5987785	0.5390678	0.7211221	8.544777026
20	2212	377C	Digital Switch	3390.95	30.7757745	12.8417474	4.8562823	2.6975957	2.8308097	54.0022
21	2124	361C	General Purpose Comp.	0.000112344	0.0000015	0.0000004	0.0000002	0.0000001	0.0000000	0.000002247
22			**Total**	**4081.23**	**32.2338425**	**17.1712641**	**6.4935483**	**3.2467310**	**3.5653992**	**62.7108**
23	ISDN BRI Port									
24	2111	20C	Land	1.070477724	0.0000000	0.0086090	0.0032556	0.0008516	0.0011392	0.013855408
25	2121	110C	Building	57.319645370	0.1233369	0.3576219	0.1352396	0.0455994	0.0609992	0.722796971
26	2212	377C	Digital Switch	274.188925841	2.4884993	1.0383712	0.3926743	0.2181250	0.2288965	4.366566256
27	2232.3	357C	Other Digital Equipment	8.241824338	0.0753559	0.0312190	0.0118059	0.0065566	0.0175069	0.142444391
28	2232.3	357CS	Other Digital Equipment	4.407441251	0.0402977	0.0166949	0.0063134	0.0035062	0.0093621	0.076174310
29	2422.12,.22	85C	UG Cbl Nonmetallic	12.751062207	0.0751695	0.0600973	0.0227266	0.0101438	0.0200838	0.188220957
30	2423.12,.22	845C	Buried Cbl Nonmetallic	0.754153644	0.0038275	0.0035860	0.0013561	0.0006000	0.0014502	0.010819648
31	2124	361C	General Purpose Comp.	0.000112344	0.0000015	0.0000004	0.0000002	0.0000001	0.0000000	0.000002247
32	2441	4C	Conduit System	1.697425765	0.0030332	0.0091378	0.0034556	0.0013503	0.0010243	0.018001277
33			**Total**	**360.431068484**	**2.8095214**	**1.5253375**	**0.5768272**	**0.2867330**	**0.3404623**	**5.538881465**
34	ISDN PRI Port									
35	2111	20C	Land	28.1214	0.0000000	0.2261580	0.0855247	0.0223713	0.0299266	0.363980673
36	2121	110C	Building	1505.7834	3.2400515	9.3947040	3.5527358	1.1978929	1.6024461	18.987830332
37	2212	377C	Digital Switch	7535.2210	68.3885820	28.5363702	10.7914185	5.9944794	6.2905016	120.0014
38	2124	361C	General Purpose Comp.	0.000112344	0.0000015	0.0000004	0.0000002	0.0000001	0.0000000	0.000002247
39			**Total**	**9069.13**	**71.6286351**	**38.1572327**	**14.4296792**	**7.2147437**	**7.9228743**	**139.3532**

Section C - Line and Trunk Ports
Port-Investment Cost Calc

	A	B	C	D	E	F	G	H	I	J
1	Qwest Default Values 5/30/02 9:43:47 AM					**Line and Trunk Ports**				
2	South Dakota			**Investment**	**Depreciation**	**Cost of Money**	**Income Tax**	**Ad Valorem**	**Maintenance**	**Total Capital Costs**
3	**Acct**	**FRC**	**Account Name**		cD*(AP p7 cA)/12	cD*(AP p7 cB)/12	cD*(AP p7 cC)/12	cD*(AP p7 cD)/12	cD*(AP p7 cE)/12	**sum(cE:cI)**
40	**DID/PBX Trunk Port**									
41	2111	20C	Land	0.584510235	0.0000000	0.0047008	0.0017777	0.0004650	0.0006220	0.007565433
42	2121	110C	Building	31.298100514	0.0673453	0.1952714	0.0738445	0.0248985	0.0333073	0.394666996
43		257C	Pair Gain—Digital	1.9866147	0.0181638	0.0075251	0.0028457	0.0015804	0.0017430	0.031858
44	2212	377C	Digital Switch	154.63492	1.4034442	0.5856124	0.2214574	0.1230164	0.1290913	2.4626
45	2124	361C	General Purpose Comp.	0.000112344	0.0000015	0.0000004	0.0000002	0.0000001	0.0000000	0.000002247
46			**Total**	**188.50425**	**1.4889550**	**0.7931101**	**0.2999254**	**0.1499604**	**0.1647636**	**2.896714**
47	**Investment Sources**									
48	Land = (AP p12 B10) * (377C + 57C+257C+257CS+357C+357CS)					Building = (AP p12 C10) *(377C+57C+257C+257CS+357C+357CS)				
49	All others = sC p4 sum of column c,e, or f by account and service									
50										
51	s = section									
52	p = page									
53	c = column									
54	r = row									
55	Upper Case letter with number indicates a cell location, i.e. G40									

Qwest Default Values 5/30/02 9:43:47 AM

South Dakota
Investment & Expense Summary

DS0 Analog Line Port

		a	b	c
Account Name	**FRC**	**DS0 Port Switching**	**B&C**	**TOTAL**
		sC p14 E3	*AP p10 F21&22*	*a+b*
General Purpose Comp.	361C		0.000112344	0.000112344
Digital Switch	377C	60.01		60.01
	Expense		0.016466529	0.016466529

DS0 Analog Trunk Port

		a	b	c
Account Name	**FRC**	**DS0 Port**	**B&C**	**TOTAL**
		sC p14 cd	*AP p10 F21&22*	*a+b*
General Purpose Comp.	361C		0.000112344	0.000112344
Digital Switch	377C	192.94		192.9394829
Pair Gain—Digital	257C	645.91		645.914928
	Expense		0.016466529	0.016466529

DS1 Trunk Port

		a	b	c
Account Name	**FRC**	**DS1 Port Switching**	**B&C**	**TOTAL**
		sC p14 E5	*AP p10 F21&22*	*a+b*
General Purpose Comp.	361C		0.000112344	0.000112344
Digital Switch	377C	3390.95		3390.95
	Expense		0.016466529	0.016466529

ISDN BRI Port

		a	b	c	d	e
Account Name	**FRC**	**RTU**	**X.75 Link**	**BRI Port Switching**	**Billing & Collections**	**Total**
		sC p6	*sC p11 r52*	*sC p14 E9*	*AP p10 F21&22*	*a+b+c+d*
General Purpose Comp.	361C				$ 0.0001	$ 0.0001
Other Digital Equipment	357C		$ 8.2418			$ 8.2418
Other Digital Equipment	357CS		$ 4.4074			$ 4.4074
Digital Switch	377C		$ 34.1696	$ 240.0193		$ 274.1889
Conduit System	4C		$ 1.6974			$ 1.6974
Buried Cbl Nonmetallic	845C		$ 0.7542			$ 0.7542
UG Cbl Nonmetallic	85C		$ 12.7511			$ 12.7511
	Expense	$ 2.0360			$ 0.0165	$ 2.0525

ISDN PRI Port

		a	b	c
Account Name	**FRC**	**23B+D**	**B&C**	**TOTAL**
		sC p14 E24	*AP p10 F21&22*	*a+b*
General Purpose Comp.	361C		$ 0.000112	$ 0.0001
Digital Switch	377C	$ 7,535.22		$ 7,535.22
	Expense		$ 0.0165	$ 0.0165

DID/PBX Trunk Port

		a	b	c	d	e	f
Account Name	**FRC**	**DS1 to DS0 Multiplexer**	**MDF**	**DSX-1**	**DLTU**	**Billing**	**Total per Termination**
		sC p13 ln5	*sC p13 ln8*	*sC p13 ln11*	*sC p14 E30*	*AP p10 F21&22*	*a+b+c+d+e*
Pair Gain—Digital	257C	$ 1.99					**$ 1.99**
Digital Switch	377C		$ 0.12	$ 0.72895	$ 153.79		**$ 154.63**
General Purpose Comp.	361C					$ 0.000112	**$ 0.000112**
	Expenses					$ 0.0165	**$ 0.0165**

Single Line ISDN Service
South Dakota

Qwest Default Values 5/30/02 9:43:47 AM

BRI RTU FEES

	SW 1			
1.	South Dakota SW 1 ISDN Lines	*sC p7 cI*		1,705
2.	SW 1 RTU per Line	*sC p15 cE*	$	100.00
	SW 2			
3	South Dakota SW 2 ISDN Lines	*sC p7 cJ*		2,832
4	SW 2 Expense RTU per ISDN Line	*sC p15 cE*	$	150.00
	Weighted Average RTU Expense			
5	South Dakota Total ISDN Lines	*Ln1 + Ln3*		4,537
6	Weighted ISDN RTU per Line	*(Ln2*(Ln1/Ln5))+(Ln4*(Ln3/Ln5))*	$	131.21
7	Levelized Monthly RTU expense per Line	*A/P using Ln 10*		$2.0360
	Pretax Discount Rate	AP p8		13.98%
	Period (years)	*sC p15 cE*		10.0

	A	B	C	D	E	F	G	H	I	J
1	**Qwest Default Values 5/30/02 9:43:47 AM**									
2				**ISDN LINES NETWORK DISCLOSED OFFICES ONLY**						
3				ANNUAL GAIN						
4	**South Dakota**									
5		**Switch Type**	**Base Year: 2001**	**2002 Forecasted Additions**	**2003 Forecasted Additions**	**2004 Forecasted Additions**		**NPV**	**SW1 Lines**	**SW2 Lines**
6								NPV (2004 to 2002 @ Discount Rate) + Prior years		
7	**ABERDEEN**	2	144	-100	-16	-14		30	0	30
8	**ARLINGTON**	2	155	-77	-34	-24		39	0	39
9	**BELLE FOURCHE**	EIA	0	0	0	0		-	0	0
10	**BLACK HAWK**	2	54	-33	-8	-7		12	0	12
11	**CANTON**	2	254	-43	-34	-40		157	0	157
12	**CAVOUR**	1	301	-133	-32	-28		133	133	0
13	**CHAMBERLAIN**	EIA	0	0	0	0		-	0	0
14	**COLMAN**	1	12	0	0	0		12	12	0
15	**DE SMET**	2	115	-34	-16	-17		58	0	58
16	**DEADWOOD**	1	249	-133	-20	-28		91	91	0
17	**ELK POINT**	2	306	-94	-58	-57		130	0	130
18	**FLANDREAU**	2	66	-33	-8	-7		24	0	24
19	**FORT PIERRE**	2	226	-116	-20	-24		86	0	86
20	**HARRISBURG**	1	42	0	0	0		42	42	0
21	**HILL CITY**	1	359	-100	-40	-34		210	210	0
22	**HURON**	1	402	-99	-40	-35		253	253	0
23	**IROQUOIS**	2	260	-100	-40	-27		116	0	116
24	**LAKE PRESTON**	2	67	-6	-8	-9		48	0	48
25	**LEAD**	2	46	-17	-4	-4		24	0	24
26	**MADISON**	EIA	0	0	0	0		-	0	0
27	**MILBANK**	2	398	-133	-64	-44		192	0	192
28	**MILLER**	1	273	-66	-40	-42		149	149	0
29	**MITCHELL**	EIA	0	0	0	0		-	0	0
30	**PIERRE**	2	82	-33	-7	-7		41	0	41
31	**RAPID CITY**	2	167	-67	-24	-28		65	0	65
32	**RAPID VALLEY**	EIA	0	0	0	0		-	0	0
33	**REDFIELD**	1	226	-61	-50	-38		101	101	0
34	**SIOUX FALLS - MAIN**	2	147	-55	-20	-17		68	0	68
35	**SIOUX FALLS - SE**	2	1887	-108	-76	-78		1,668	0	1668
36	**SIOUX FALLS - SW**	EIA	0	0	0	0		-	0	0
37	**SPEARFISH**	1	301	-83	-16	-14		202	202	0
38	**STURGIS**	1	485	-53	-23	-23		401	401	0
39	**TEA**	EIA	0	0	0	0		-	0	0
40	**VERMILLION**	2	140	-67	-5	-3		73	0	73
41	**VOLGA**	1	58	-13	6	6		56	56	0
42	**WARWICK**	EIA	44	-13	12	13		52	0	0
43	**WATERTOWN**	1	37	-9	-6	0		24	24	0
44	**WHITEWOOD**	EIA	0	0	0	0		-	0	0
45	**YANKTON**	1	42	-8	-2	0		33	33	0
46	**South Dakota Totals**		7,345	(1,887)	(693)	(630)		4,589	1,705	2,832
47										
48										
49	Discount Rate =	0.1014								

Qwest Default Values 5/30/02 9:43:47 AM

South Dakota

X.75 LINK

INPUTS

1.	Investment per SW1 ISDN Equipped End Office	*sC p15 cE*	377C	$	8,719.53
2.	Investment per SW2 ISDN Equipped End Office	*sC p15 cE*	377C	$	8,396.30
3.	Investment per DACS Port	*DCS cost study*	377C	$	447.75
4.	Investment per Digipac X.75' Port	*sC p15 cE*	377C	$	19,124.62
5.	Investment per Digipac Trunk Port	*sC p15 cE*	377C	$	19,124.62
6.	Number of ISDN Lines	*sC p7 H78*			4,589
7.	Number of SW1 ISDN EO w/X.75 Links	*sC p15 cE*			12
8.	Number of SW2 ISDN EO w/X.75 Links	*sC p15 cE*			-
9.	Number of ISDN Digipac Switches	*sC p15 cE*			2
10.	% Digipac Traffic Originating from ISDN	*sC p15 cE*			10%
11.	DS1s per Packet Switch Link	*sC p15 cE*			1
12.	Number of Links between Packet Switches	*sC p15 cE*			1
13.	Average Mileage between End Offices and DACS	*sC p15 cE*			76.62
14.	Average Mileage between Packet Switches	*sC p15 cE*			326.20
15.	DS1 Interoffice Investments (Avg of all Mileage Bands)				
	a. Terminations	*sE p11*	357C	$	1,458.34
	b. Terminations	*sE p11*	357CS	$	1,091.00
	c. Facilities - per Mile	*sE p11*	357C	$	21.19
	d. Facilities - per Mile	*sE p11*	357CS	$	7.38
	e. Facilities - per Mile	*sE p11*	4C	$	8.18
	f. Facilities - per Mile	*sE p11*	845C	$	3.64
	g. Facilities - per Mile	*sE p11*	85C	$	61.46

ISDN EQUIPPED END OFFICE INVESTMENT PER ISDN LINE

16.	Switch Type 1 End Office Investment	*Ln1*	377C	$	8,719.53
17.	Switch Type 1 ISDN Equipped End Offices	*Ln7*			12
18.	Total Switch Type 1 Investment	*Ln16 x Ln17*		$	104,634.30
19.	Switch Type 2 End Office Investment	*Ln2*	377C	$	8,396.30
20.	Switch Type 2 ISDN Equipped End Offices	*Ln8*			-
21.	Total Switch Type 2 Investment	*Ln19 x Ln20*		$	-
22.	Total Investment	*Ln18 + Ln21*		$	104,634.30
23.	Total ISDN Lines	*Ln6*			4,589
24.	Investment per ISDN Line	*Ln22 / Ln23*	377C	$	22.80

Qwest Default Values 5/30/02 9:43:47 AM

South Dakota

X.75 LINK

ISDN END OFFICE TO DACS DS1 PER ISDN LINE

25. Total DS1 Investments				
a. Total Termination	*(Ln7+Ln8) x Ln15a*	357C	$	17,500.13
b. Total Termination	*(Ln7+Ln8) x Ln15b*	357CS	$	13,092.04
c. Total Facilities	*(Ln7+Ln8) x Ln13 x Ln15c*	357C	$	19,483.92
d. Total Facilities	*(Ln7+Ln8) x Ln13 x Ln15d*	357CS	$	6,783.62
e. Total Facilities	*(Ln7+Ln8) x Ln13 x Ln15e*	4C	$	7,522.48
f. Total Facilities	*(Ln7+Ln8) x Ln13 x Ln15f*	845C	$	3,342.18
g. Total Facilities	*(Ln7+Ln8) x Ln13 x Ln15g*	85C	$	56,508.88
26. ISDN Lines	*Ln6*			4,589
27. DS1 Investment per Line				
a. Termination	*Ln25a / Ln26*	357C	$	3.8136
b. Termination	*Ln25b / Ln26*	357CS	$	2.8530
c. Facilities	*Ln25c / Ln26*	357C	$	4.2459
d. Facilities	*Ln25d / Ln26*	357CS	$	1.4783
e. Facilities	*Ln25e / Ln26*	4C	$	1.6393
f. Facilities	*Ln25f / Ln26*	845C	$	0.7283
g. Facilities	*Ln25g / Ln26*	85C	$	12.3142

DACS

28. Investment per DACS Port	*Ln3*	377C	$	447.75
29. Number of Ports (Incoming + Outgoing)	*Ln7 + Ln8 + Ln9*			14
30. Total DACS Investment	*Ln28 x Ln29*		$	6,268.50
31. ISDN Lines	*Ln6*			4,589
32. Investment per ISDN Line	*Ln30 / Ln31*	377C	$	1.3660

Packet Switching X.75 Ports (Incoming)

33. Investment per X.75 Port	*Ln4*	377C	$	19,124.62
34. Packet Switches within LATA	*Ln9*			2
35. Total Incoming Port Investment	*Ln33 x Ln34*		$	38,249.25
36. ISDN Lines	*Ln6*			4,589
37. Investment per ISDN Line	*Ln35 / Ln36*	377C	$	8.34

Packet Switching Trunk Ports (Outgoing)

38. Investment per Packet Switch Trunk Port	*Ln5*	377C	$	19,124.62
39. Number of Trunk Ports per Packet Switch	*sC p18 cE*			2
40. Packet Switches within LATA	*Ln9*			2
41. Total Trunk Port Investment	*Ln38 x Ln39 x Ln40*		$	76,498.49
42. ISDN Lines	*Ln6*			4,589
43. Investment per ISDN Line	*Ln41 / Ln42*		$	16.67
44. Percent Originating Digipac Traffic from ISDN	*Ln10*			10%
45. Investment per ISDN Line	*Ln43 x Ln44*	377C	$	1.67

Qwest Default Values 5/30/02 9:43:47 AM

South Dakota

X.75 LINK

Inter Packet Switch IntraLATA Trunks

46. Total DS1 Investments for Packet Switch Links				
a. Termination	*Ln12 x Ln11 x Ln15a*	357C	$	1,458.34
b. Termination	*Ln12 x Ln11 x Ln15b*	357CS	$	1,091.00
c. Facilities	*Ln12 x Ln11 x Ln14 x Ln15c*	357C	$	6,912.53
d. Facilities	*Ln12 x Ln11 x Ln14 x Ln15d*	357CS	$	2,406.70
e. Facilities	*Ln12 x Ln11 x Ln14 x Ln15e*	4C	$	2,668.83
f. Facilities	*Ln12 x Ln11 x Ln14 x Ln15f*	845C	$	1,185.74
g. Facilities	*Ln12 x Ln11 x Ln14 x Ln15g*	85C	$	20,048.29
47. Percent Originating Digipac Traffic from ISDN	*Ln10*			10%
48. Investment per Link for ISDN				
a. Termination	*Ln46a x Ln47*	357C	$	145.83
b. Termination	*Ln46b x Ln47*	357CS	$	109.10
c. Facilities	*Ln46c x Ln47*	357C	$	691.25
d. Facilities	*Ln46d x Ln47*	357CS	$	240.67
e. Facilities	*Ln46e x Ln47*	4C	$	266.88
f. Facilities	*Ln46f x Ln47*	845C	$	118.57
g. Facilities	*Ln46g x Ln47*	85C	$	2,004.83
49. ISDN Lines	*Ln6*			4,589
50. Investment per ISDN Line				
a. Termination	*Ln48a / Ln49*	357C	$	0.0318
b. Termination	*Ln48b / Ln49*	357CS	$	0.0238
c. Facilities	*Ln48c / Ln49*	357C	$	0.1506
d. Facilities	*Ln48d / Ln49*	357CS	$	0.0524
e. Facilities	*Ln48e / Ln49*	4C	$	0.0582
f. Facilities	*Ln48f / Ln49*	845C	$	0.0258
g. Facilities	*Ln48g / Ln49*	85C	$	0.4369

Qwest Default Values 5/30/02 9:43:47 AM

South Dakota

X.75 LINK

SUMMARY

51. Investment by Element per ISDN Line				
a. ISDN Equipped End Office	*Ln24*	377C	$	22.8015
b. ISDN End Office to DACS	*Ln27a*	357C	$	3.8136
c. ISDN End Office to DACS	*Ln27b*	357CS	$	2.8530
d. ISDN End Office to DACS	*Ln27c*	357C	$	4.2459
e. ISDN End Office to DACS	*Ln27d*	357CS	$	1.4783
f. ISDN End Office to DACS	*Ln27e*	4C	$	1.6393
g. ISDN End Office to DACS	*Ln27f*	845C	$	0.7283
h. ISDN End Office to DACS	*Ln27g*	85C	$	12.3142
i. DACS	*Ln32*	377C	$	1.3660
j. Packet Switch Incoming Ports	*Ln37*	377C	$	8.3351
k. Packet Switch Outgoing Trunk Ports	*Ln45*	377C	$	1.6670
l. Inter Packet Switch Links	*Ln50a*	357C	$	0.0318
m. Inter Packet Switch Links	*Ln50b*	357CS	$	0.0238
n. Inter Packet Switch Links	*Ln50c*	357C	$	0.1506
o. Inter Packet Switch Links	*Ln50d*	357CS	$	0.0524
p. Inter Packet Switch Links	*Ln50e*	4C	$	0.0582
q. Inter Packet Switch Links	*Ln50f*	845C	$	0.0258
r. Inter Packet Switch Links	*Ln50g*	85C	$	0.4369

52. Investment by Account per ISDN Line	*Ln51a+Ln51i+Ln51j+Ln51k*	377C	**$**	**34.1696**
	Ln51b+Ln51d+Ln51l+Ln51n	357C	**$**	**8.2418**
	Ln51c+Ln51e+Ln51m+Ln51o	357CS	**$**	**4.4074**
	Ln51f+Ln51p	4C	**$**	**1.6974**
	Ln51g+Ln51q	845C	**$**	**0.7542**
	Ln51h+Ln51r	85C	**$**	**12.7511**

Section C - Line and Trunk Ports
DS0 Trunk Investment Dev

DS0 Analog Trunk Port

South Dakota

Qwest Default Values 5/30/02 9:43:47 AM

		FRC	*Source*	Investment/ DS1	DS0 per DS1	Utilization Factor	DS0 Investment
				a	*b*	*c*	*d*
						sC p15 cE	*a/b/c*
1)	DS1 Trunk Port Investment	377C	*sC p14 E5*	3390.95	24	73%	192.94
2)	DS1 - DS0 Multiplexing	257C	*sE p9 E23*	11352.084	24	73%	645.91

DIRECT INWARD DIALING (DID/PBX TRUNK SERVICE)			
South Dakota			
Qwest Default Values 5/30/02 9:43:47 AM			
Conersion of DS1 Investments to DS0			
Multiplexer (Required for analog port)			
1 Investment for DS1 to DS0 Multiplexer	*sE p9 E23*	$ 11,352.08	
2 DS0 Channel Capacity of Multiplexer		24	
3 Investment per DS0 Channel	*Ln1 / Ln2*	$ 473.00	
4 % Analog Ports	*sC p15 cE*	0.42%	
5 Investment per DS0 Channel	*Ln4 X Ln3*	$ 1.99	257C
MDF (Required for analog port)			
6 MDF Investment	*sD p10 B17*	$ 27.71	
7 % Analog Ports	*Ln12*	0.42%	
8 Investment per DS0 Channel	*Ln7 X Ln6*	$ 0.12	377C
DSX-1 Panel			
9 Investment for DSX-1 Cross-Connect Panel	*sC p15 cE*	$ 17.4949	
10 DS0 Channel Capacity of DSX-1 Panel		24	
11 Investment per DS0 Channel	*Ln9 / Ln10*	$ 0.72895	377C

	A	B	C	D	E	F
1	South Dakota		Direct - Category 1	Direct - Category 2	Total	
2	Qwest Default Values 5/30/02 9:43:47 AM					
3	**LIS Analog Port**	377C	52.94	7.07	60.01	
4						
5	**DS1 Trunk Port**	377C	2579.70	811.25	3390.95	
6						
7	**ISDN BRI Port**					
8	Nonintegrated BRI w/o Packet	377C	171.606595	16.767323	188.373918	
9	D Channel- Port Ltd. Packet Switch	377C	51.645395	0	51.645395	
10		Total			240.019313	
20	**ISDN PRI Port**					
24	PRI w/o Packet (23B+D)	377C	7112.24517	422.975831	7535.220997	
25						
28						
29	**DID/PBX Trunk Port**					
30	TRUNKSIDE Digital Facility Termination (DS0)	377C	129.966214	23.823367	153.789581	
31						
32						
33						

	A	B	C	D	E	F
1	Qwest Default Values 5/30/02 9:43:47 AM					
2						
3			**Port**			
4			**South Dakota**			
5	**Description**	**Default Source**	**Default Value**	**Overrides**	**This Run**	**Instructions**
6				AP p16		
7	BRI Capital lease period - Years	*Prescribed Switch Life*	10		10	
8	BRI SW 1 Capital Lease Expense / Port	*Capital Lease Expense / Port*	100		100	
9	BRI SW 2 Capital Lease Expense / Port	*Capital Lease Expense / Port*	150		150	
10	ISDN BRI Number of SW1 ISDN EO w/X.75 Links	*Forecast*	12		12	
11	ISDN BRI Number of SW2 ISDN EO w/X.75 Links	*Forecast*	0		0	
12	ISDN BRI Number of ISDN Digipac Switches	*Design Parameter*	2		2	
13	ISDN BRI % Digipac Traffic Originating from ISDN	*Design Parameter*	10%		10%	
14	ISDN BRI DS1s per Packet Switch Link	*Design Parameter*	1		1	
15	ISDN BRI Number of Links between Packet Switches	*Design Parameter*	1		1	
16	ISDN BRI Average Mileage between End Offices and DACS	*X.75 File*	76.62		76.62	
17	ISDN BRI Average Mileage between Packet Switches	*V&H Coordinates*	326.2		326.2	
18	ISDN BRI Number of Trunk Ports per Packet Switch	*Assumption*	2		2	
19	ISDN BRI SW1 x.75 End Office DS1 Port Investment	*Installed investment*	$ 8,719.53		$ 8,719.53	
20	ISDN BRI SW2 x.75 End Office DS1 Port Investment	*Installed investment*	$ 8,396.30		$ 8,396.30	
21	ISDN BRI X.75 Digipac Port (Incoming or Outgoing) EFI Investment	*Installed investment*	$ 19,124.62		$ 19,124.62	
22	DS0 Analog Trunk Equipment Utilization Factor		73.23%		73.23%	
23	% Analog DID Trunk Ports	*Dec 2000 in-service*	0.42%		0.42%	
24	Investment for DSX-1 Cross-Connect Panel For DID Trunk Port	*DS1NACmodel v11002.0*	$ 17.49		$ 17.49	
25						
26	This Run equals Default Value if Overrides is empty					
27	s = section					
28	p = page					
29	c = column					
30	r = row					
31	Upper Case letter with number indicates a cell location, i.e. G40					

Row	Qwest Default Values 5/30/02 9:43:47 AM South Dakota	Factor Value [AP p1 cB]	Local Usage Costs Local Switching UNE per Minute of Use	Tandem Switched Local Transport Tandem Switching UNE per Minute of Use	Local Switching LIS per Minute of Use	Tandem Switching LIS per Minute of Use	Fixed per Minute of Use 0 to 8 Miles	Fixed per Minute of Use 8 to 25 Miles	Fixed per Minute of Use 25 to 50 Miles	Fixed per Minute of Use Over 50 Miles	Distance Sensitive per Minute of Use from 0 to 8 miles	Distance Sensitive per Minute of Use from 8 to 25 miles	Distance Sensitive per Minute of Use from 25 to 50 miles	Distance Sensitive per Minute of Use over 50 miles
		A	B	C	D	E	F	G	H	I	J	K	L	M
1	**Investment**	sD p2-4 cD	0.0146776	0.00867166	0.008597005	0.00572193	0.00463026	0.00463026	0.00463026	0.00413313	0.0001160	0.0001160	0.0001160	0.0000724
2														
3	Investment Based Costs (IBC)	sD p2-4 cJ	0.0027188	0.0016114	0.0015914	0.0010551	0.0009164	0.0009164	0.0009164	0.0008180	0.0000199	0.0000199	0.0000199	0.0000128
4	Element Specific Expenses		0.0002930	0.0002770	0.0003430									
5	***Total IBC + Element Specific Expenses***		0.0030118	0.0018884	0.0019344	0.0010551	0.0009164	0.0009164	0.0009164	0.0008180	0.0000199	0.0000199	0.0000199	0.0000128
6														
7	***Marketing & Business Fees***													
8	Product Management Expense	0.01996	0.0000601	0.0000377	0.0000386	0.0000211	0.0000183	0.0000183	0.0000183	0.0000163	0.0000004	0.0000004	0.0000004	0.0000003
9	Sales Expense	0.01188	0.0000358	0.0000224	0.0000230	0.0000125	0.0000109	0.0000109	0.0000109	0.0000097	0.0000002	0.0000002	0.0000002	0.0000002
10	Product Advertising Expense	0.00000	0.0000000	0.0000000	0.0000000	0.0000000	0.0000000	0.0000000	0.0000000	0.0000000	0.0000000	0.0000000	0.0000000	0.0000000
11	Business Fees (Other Operating Taxes)	0.00148	0.0000046	0.0000029	0.0000030	0.0000016	0.0000014	0.0000014	0.0000014	0.0000013	0.0000000	0.0000000	0.0000000	0.0000000
12	***Marketing & Business Fees Total***		0.0001005	0.0000630	0.0000645	0.0000352	0.0000306	0.0000306	0.0000306	0.0000273	0.0000007	0.0000007	0.0000007	0.0000004
13														
14	***Sub-Total Expenses***		0.0031123	0.0019514	0.0019989	0.0010903	0.0009470	0.0009470	0.0009470	0.0008453	0.0000206	0.0000206	0.0000206	0.0000132
15														
16	***Other Direct Expenses***													
17	Network Operations	0.03483	0.0001084	0.0000680	0.0000696	0.0000380	0.0000330	0.0000330	0.0000330	0.0000294	0.0000007	0.0000007	0.0000007	0.0000005
18	Network Support Assets	0.01470	0.0000458	0.0000287	0.0000294	0.0000160	0.0000139	0.0000139	0.0000139	0.0000124	0.0000003	0.0000003	0.0000003	0.0000002
19	General Support Assets	0.08874	0.0002762	0.0001732	0.0001774	0.0000968	0.0000840	0.0000840	0.0000840	0.0000750	0.0000018	0.0000018	0.0000018	0.0000012
20	General Purpose Computers	0.04334	0.0001349	0.0000846	0.0000866	0.0000473	0.0000410	0.0000410	0.0000410	0.0000366	0.0000009	0.0000009	0.0000009	0.0000006
21	Uncollectible - Interconnect	0.00379	0.0000118	0.0000074	0.0000076	0.0000041	0.0000036	0.0000036	0.0000036	0.0000032	0.0000001	0.0000001	0.0000001	0.0000001
22	Accounting and Finance Expense	0.00735	0.0000229	0.0000143	0.0000147	0.0000080	0.0000070	0.0000070	0.0000070	0.0000062	0.0000002	0.0000002	0.0000002	0.0000001
23	Human Resources Expense	0.00829	0.0000258	0.0000162	0.0000166	0.0000090	0.0000079	0.0000079	0.0000079	0.0000070	0.0000002	0.0000002	0.0000002	0.0000001
24	Information Management Expense	0.07089	0.0002206	0.0001383	0.0001417	0.0000773	0.0000671	0.0000671	0.0000671	0.0000599	0.0000015	0.0000015	0.0000015	0.0000009
25	Intangibles	0.00000	0.0000000	0.0000000	0.0000000	0.0000000	0.0000000	0.0000000	0.0000000	0.0000000	0.0000000	0.0000000	0.0000000	0.0000000
26	***Total Other Direct Expenses***		0.0008463	0.0005307	0.0005436	0.0002965	0.0002575	0.0002575	0.0002575	0.0002299	0.0000056	0.0000056	0.0000056	0.0000036
27														
28	***Total Element Long Run Incremental Costs***		0.0039587	0.0024821	0.0025425	0.0013867	0.0012045	0.0012045	0.0012045	0.0010752	0.0000262	0.0000262	0.0000262	0.0000168
29														
30	***Common***													
31	Executive Expense	0.01127	0.0000446	0.0000280	0.0000286	0.0000156	0.0000136	0.0000136	0.0000136	0.0000121	0.0000003	0.0000003	0.0000003	0.0000002
32	Planning Expense	0.00053	0.0000021	0.0000013	0.0000013	0.0000007	0.0000006	0.0000006	0.0000006	0.0000006	0.0000000	0.0000000	0.0000000	0.0000000
33	External Relations Expense	0.03785	0.0001498	0.0000939	0.0000962	0.0000525	0.0000456	0.0000456	0.0000456	0.0000407	0.0000010	0.0000010	0.0000010	0.0000006
34	Legal Expense	0.00472	0.0000187	0.0000117	0.0000120	0.0000065	0.0000057	0.0000057	0.0000057	0.0000051	0.0000001	0.0000001	0.0000001	0.0000001
35	Other Procurement Expense	0.00186	0.0000074	0.0000046	0.0000047	0.0000026	0.0000022	0.0000022	0.0000022	0.0000020	0.0000000	0.0000000	0.0000000	0.0000000
36	Research and Development Expense	0.00001	0.0000000	0.0000000	0.0000000	0.0000000	0.0000000	0.0000000	0.0000000	0.0000000	0.0000000	0.0000000	0.0000000	0.0000000
37	Other General and Admin Exp	0.01506	0.0000596	0.0000374	0.0000383	0.0000209	0.0000181	0.0000181	0.0000181	0.0000162	0.0000004	0.0000004	0.0000004	0.0000003
38	***Total Common Costs***		0.0002822	0.0001769	0.0001812	0.0000989	0.0000859	0.0000859	0.0000859	0.0000766	0.0000019	0.0000019	0.0000019	0.0000012
39														
40	***TELRIC + Common***		**0.0042409**	**0.0026590**	**0.0027237**	**0.0014856**	**0.0012904**	**0.0012904**	**0.0012904**	**0.0011519**	**0.0000280**	**0.0000280**	**0.0000280**	**0.0000180**

c = column, r = row, s = section, p = page, AP = Appendix

	A	B	C	D	E	F	G	H	I	J
1	Qwest Default Values 5/30/02 9:43:47 AM						**Local Usage**			
2	South Dakota			**Investment**	**Depreciation**	**Cost of Money**	**Income Tax**	**Ad Valorem**	**Maintenance**	**Total Capital Costs**
3	**Acct**	**FRC**	**Account Name**		**cD*(AP p7 cA)**	**cD*(AP p7 cB)**	**cD*(AP p7 cC)**	**cD*(AP p7 cD)**	**cD*(AP p7 cE)**	**sum(cE:cI)**
4	**Local Switching (UNE)**									
5	2111	20C	Land	0.0000448	0.0000000	0.0000043	0.0000016	0.0000004	0.0000006	0.0000070
6	2121	110C	Building	0.0023998	0.0000620	0.0001797	0.0000679	0.0000229	0.0000306	0.0003631
7	2124	361C	General Purpose Comp.	0.0002241	0.0000369	0.0000107	0.0000040	0.0000021	0.0000000	0.0000538
8	2212	377C	Digital Switch	0.0120089	0.0013079	0.0005457	0.0002064	0.0001146	0.0001203	0.0022950
9			**Total**	**0.0146776**	**0.0014068**	**0.0007404**	**0.0002800**	**0.0001401**	**0.0001515**	**0.0027188**
10	**Tandem Switching (UNE)**									
11	2111	20C	Land	0.0000262	0.0000000	0.0000025	0.0000010	0.0000003	0.0000003	0.0000041
12	2121	110C	Building	0.0014026	0.0000362	0.0001050	0.0000397	0.0000134	0.0000179	0.0002122
13	2124	361C	General Purpose Comp.	0.0002241	0.0000369	0.0000107	0.0000040	0.0000021	0.0000000	0.0000538
14	2212	377C	Digital Switch	0.0070188	0.0007644	0.0003190	0.0001206	0.0000670	0.0000703	0.0013413
15			**Total**	**0.0086717**	**0.0008376**	**0.0004372**	**0.0001653**	**0.0000828**	**0.0000886**	**0.0016114**
16	**Local Switching (LIS)**									
17	2111	20C	Land	0.0000263	0.0000000	0.0000025	0.0000010	0.0000003	0.0000003	0.0000041
18	2121	110C	Building	0.0014090	0.0000364	0.0001055	0.0000399	0.0000135	0.0000180	0.0002132
19	2124	361C	General Purpose Comp.	0.0001110	0.0000183	0.0000053	0.0000020	0.0000011	0.0000000	0.0000266
20	2212	377C	Digital Switch	0.0070507	0.0007679	0.0003204	0.0001212	0.0000673	0.0000706	0.0013474
21			**Total**	**0.0085970**	**0.0008226**	**0.0004337**	**0.0001640**	**0.0000821**	**0.0000890**	**0.0015914**
22	**Tandem Switching (LIS)**									
23	2111	20C	Land	0.0000177	0.0000000	0.0000017	0.0000006	0.0000002	0.0000002	0.0000028
24	2121	110C	Building	0.0009500	0.0000245	0.0000711	0.0000269	0.0000091	0.0000121	0.0001438
25	2212	377C	Digital Switch (No RTU)	0.0047541	0.0005178	0.0002161	0.0000817	0.0000454	0.0000476	0.0009085
26			**Total**	**0.0057219**	**0.0005423**	**0.0002889**	**0.0001092**	**0.0000546**	**0.0000600**	**0.0010551**
27	**Fixed per MOU**									
28	**OVER 0 TO 8**									
29	2111	20C	Land	0.0000144	0.0000000	0.0000014	0.0000005	0.0000001	0.0000002	0.0000022
30	2121	110C	Building	0.0007688	0.0000199	0.0000576	0.0000218	0.0000073	0.0000098	0.0001163
31	2232.3	357C	Other Digital Equipment	0.0017386	0.0001908	0.0000790	0.0000299	0.0000166	0.0000443	0.0003606
32	2233.3	357CS	Other Digital Equipment	0.0021085	0.0002313	0.0000958	0.0000362	0.0000201	0.0000537	0.0004373
33			**Total**	**0.0046303**	**0.0004419**	**0.0002338**	**0.0000884**	**0.0000442**	**0.0001081**	**0.0009164**
34	**OVER 8 TO 25**									
35	2111	20C	Land	0.0000144	0.0000000	0.0000014	0.0000005	0.0000001	0.0000002	0.0000022
36	2121	110C	Building	0.0007688	0.0000199	0.0000576	0.0000218	0.0000073	0.0000098	0.0001163
37	2232.3	357C	Other Digital Equipment	0.0017386	0.0001908	0.0000790	0.0000299	0.0000166	0.0000443	0.0003606
38	2233.3	357CS	Other Digital Equipment	0.0021085	0.0002313	0.0000958	0.0000362	0.0000201	0.0000537	0.0004373
39			**Total**	**0.0046303**	**0.0004419**	**0.0002338**	**0.0000884**	**0.0000442**	**0.0001081**	**0.0009164**

	A	B	C	D	E	F	G	H	I	J
1	Qwest Default Values 5/30/02 9:43:47 AM						**Local Usage**			
2	South Dakota			**Investment**	**Depreciation**	**Cost of Money**	**Income Tax**	**Ad Valorem**	**Maintenance**	**Total Capital Costs**
3	**Acct**	**FRC**	**Account Name**		**cD*(AP p7 cA)**	**cD*(AP p7 cB)**	**cD*(AP p7 cC)**	**cD*(AP p7 cD)**	**cD*(AP p7 cE)**	**sum(cE:cI)**
40	**OVER 25 TO 50**									
41	2111	20C	Land	0.0000144	0.0000000	0.0000014	0.0000005	0.0000001	0.0000002	0.0000022
42	2121	110C	Building	0.0007688	0.0000199	0.0000576	0.0000218	0.0000073	0.0000098	0.0001163
43	2232.3	357C	Other Digital Equipment	0.0017386	0.0001908	0.0000790	0.0000299	0.0000166	0.0000443	0.0003606
44	2233.3	357CS	Other Digital Equipment	0.0021085	0.0002313	0.0000958	0.0000362	0.0000201	0.0000537	0.0004373
45			**Total**	**0.0046303**	**0.0004419**	**0.0002338**	**0.0000884**	**0.0000442**	**0.0001081**	**0.0009164**
46	**OVER 50**									
47	2111	20C	Land	0.0000128	0.0000000	0.0000012	0.0000005	0.0000001	0.0000002	0.0000020
48	2121	110C	Building	0.0006862	0.0000177	0.0000514	0.0000194	0.0000066	0.0000088	0.0001038
49	2232.3	357C	Other Digital Equipment	0.0017377	0.0001907	0.0000790	0.0000299	0.0000166	0.0000443	0.0003604
50	2233.3	357CS	Other Digital Equipment	0.0016964	0.0001861	0.0000771	0.0000292	0.0000162	0.0000432	0.0003518
51			**Total**	**0.0041331**	**0.0003945**	**0.0002087**	**0.0000789**	**0.0000395**	**0.0000965**	**0.0008180**
52	**Distance Sensitive per MOU Per Airline Mile**									
53	**OVER 0 TO 8**									
54	2111	20C	Land	0.0000000	0.0000000	0.0000000	0.0000000	0.0000000	0.0000000	0.0000000
55	2121	110C	Building	0.0000026	0.0000001	0.0000002	0.0000001	0.0000000	0.0000000	0.0000004
56	2232.3	357C	Other Digital Equipment	0.0000027	0.0000003	0.0000001	0.0000000	0.0000000	0.0000001	0.0000006
57	2233.3	357CS	Other Digital Equipment	0.0000105	0.0000012	0.0000005	0.0000002	0.0000001	0.0000003	0.0000022
58	2422.12,.22	85C	UG Cbl Nonmetallic	0.0000050	0.0000004	0.0000003	0.0000001	0.0000000	0.0000001	0.0000009
59	2423.12,.22	845C	Buried Cbl Nonmetallic	0.0000840	0.0000051	0.0000048	0.0000018	0.0000008	0.0000019	0.0000145
60	2441	4C	Conduit System	0.0000112	0.0000002	0.0000007	0.0000003	0.0000001	0.0000001	0.0000014
61			**Total**	**0.0001160**	**0.0000072**	**0.0000066**	**0.0000025**	**0.0000011**	**0.0000025**	**0.0000199**
62	**OVER 8 TO 25**									
63	2111	20C	Land	0.0000000	0.0000000	0.0000000	0.0000000	0.0000000	0.0000000	0.0000000
64	2121	110C	Building	0.0000026	0.0000001	0.0000002	0.0000001	0.0000000	0.0000000	0.0000004
65	2232.3	357C	Other Digital Equipment	0.0000027	0.0000003	0.0000001	0.0000000	0.0000000	0.0000001	0.0000006
66	2233.3	357CS	Other Digital Equipment	0.0000105	0.0000012	0.0000005	0.0000002	0.0000001	0.0000003	0.0000022
67	2422.12,.22	85C	UG Cbl Nonmetallic	0.0000050	0.0000004	0.0000003	0.0000001	0.0000000	0.0000001	0.0000009
68	2423.12,.22	845C	Buried Cbl Nonmetallic	0.0000840	0.0000051	0.0000048	0.0000018	0.0000008	0.0000019	0.0000145
69	2441	4C	Conduit System	0.0000112	0.0000002	0.0000007	0.0000003	0.0000001	0.0000001	0.0000014
70			**Total**	**0.0001160**	**0.0000072**	**0.0000066**	**0.0000025**	**0.0000011**	**0.0000025**	**0.0000199**

	A	B	C	D	E	F	G	H	I	J
1	Qwest Default Values 5/30/02 9:43:47 AM						**Local Usage**			
2	South Dakota			**Investment**	**Depreciation**	**Cost of Money**	**Income Tax**	**Ad Valorem**	**Maintenance**	**Total Capital Costs**
3	**Acct**	**FRC**	**Account Name**		**cD*(AP p7 cA)**	**cD*(AP p7 cB)**	**cD*(AP p7 cC)**	**cD*(AP p7 cD)**	**cD*(AP p7 cE)**	**sum(cE:cI)**
71	**OVER 25 TO 50**									
72	2111	20C	Land	0.0000000	0.0000000	0.0000000	0.0000000	0.0000000	0.0000000	0.0000000
73	2121	110C	Building	0.0000026	0.0000001	0.0000002	0.0000001	0.0000000	0.0000000	0.0000004
74	2232.3	357C	Other Digital Equipment	0.0000027	0.0000003	0.0000001	0.0000000	0.0000000	0.0000001	0.0000006
75	2233.3	357CS	Other Digital Equipment	0.0000105	0.0000012	0.0000005	0.0000002	0.0000001	0.0000003	0.0000022
76	2422.12,.22	85C	UG Cbl Nonmetallic	0.0000050	0.0000004	0.0000003	0.0000001	0.0000000	0.0000001	0.0000009
77	2423.12,.22	845C	Buried Cbl Nonmetallic	0.0000840	0.0000051	0.0000048	0.0000018	0.0000008	0.0000019	0.0000145
78	2441	4C	Conduit System	0.0000112	0.0000002	0.0000007	0.0000003	0.0000001	0.0000001	0.0000014
79			**Total**	**0.0001160**	**0.0000072**	**0.0000066**	**0.0000025**	**0.0000011**	**0.0000025**	**0.0000199**
80	**OVER 50**									
81	2111	20C	Land	0.0000001	0.0000000	0.0000000	0.0000000	0.0000000	0.0000000	0.0000000
82	2121	110C	Building	0.0000038	0.0000001	0.0000003	0.0000001	0.0000000	0.0000000	0.0000006
83	2232.3	357C	Other Digital Equipment	0.0000032	0.0000004	0.0000001	0.0000001	0.0000000	0.0000001	0.0000007
84	2233.3	357CS	Other Digital Equipment	0.0000156	0.0000017	0.0000007	0.0000003	0.0000001	0.0000004	0.0000032
85	2422.12,.22	85C	UG Cbl Nonmetallic	0.0000025	0.0000002	0.0000001	0.0000001	0.0000000	0.0000000	0.0000004
86	2423.12,.22	845C	Buried Cbl Nonmetallic	0.0000417	0.0000025	0.0000024	0.0000009	0.0000004	0.0000010	0.0000072
87	2441	4C	Conduit System	0.0000055	0.0000001	0.0000004	0.0000001	0.0000001	0.0000000	0.0000007
88			**Total**	**0.0000724**	**0.0000050**	**0.0000040**	**0.0000015**	**0.0000007**	**0.0000016**	**0.0000128**
89	**Investment Sources**									
90	Land = (AP p12 B10) * (377C + 57C+257C+257CS+357C+357CS) Building = (AP p12 C10) *(377C+57C+257C+257CS+357C+357CS)									
91	Computer = sD p5 E7, LS UNE 377C = sD p7 K12+K14+K15, LS LIS 377C = sD p8 K12, Tandem UNE 377C = sD p7 M28+M29, Tandem LIS 377C = sD p8 M27									
92	Fixed and distance sensitive = sD p12 cH									

	A	B	C	D	E	F
1	Qwest Default Values 5/30/02 9:43:47 AM					
2			**Local Interconnection Usage**			
3			**South Dakota**			
4	**Description**	**Default Source**	**Default Value**	**Overrides** AP p15	**This Run**	**Instructions**
6	Average Hold Time	sD p13 cD	2.582066		2.582066	Enter average hold time in minutes.
7	Billing and Collection Investment	AP p10 F9	0.000111		0.000111	Enter investment per MOU required for B&C
8	Billing and Collection Direct Expenses	sD p7 I40	0.000277		0.000277	Enter direct labor expenses associated with B & C per MOU
9	Intercept Direct Expenses	sD p7 I42	0.000016		0.000016	Enter direct expenses for non chargeable intercept per MOU
10	HP Measurement Investments	sD p8 G43	0.000354		0.000354	Enter measurement equipment investment per MOU
11	HP Measurement Expenses	sD p8 I43	0.000050		0.000050	Enter measurement direct expenses per MOU
12	AMA Investment	sD p7 I44	0.003616		0.003616	Enter AMA Measurement Investment per completed call
13						
14	This Run equals Default Value if Overrides is empty					
15	s = section					
16	p = page					
17	c = column					
18	r = row					
19	Upper Case letter with number indicates a cell location, i.e. G40					
20	The spreadsheet shows the Override data entered by the user in ICM's custom input screens. If the					
21	user has input override data, the spreadsheet will determine this and display the override data in the					
22	Overrides column. The this run column will show the Override or the Default Value if no override					
23	has been entered.					
24						

Cell: A9
Comment: NON CHARGABLE INTERCEPT

Description
Non chargable Intercept service provides explanatory information to callers dialing changed or disconnected telephone numbers. The intercept messages are delivered mechanically. The results of the Intercept study are used in the usage portion of other studies (Basic Exchange, Local Interconnection, Toll, etc.).

Investment Development

The 1996 USWC Non Chargeable Intercept expenses were divided by USWC total annual messages and/or conversation minutes to develop the 1996 USWC Non Chargeable Intercept costs per message and per minute. The expenses included costs related to intercept equipment, facilities, transport, and local switching.

The 1989 switch investment and software Right-to-Use (RTU) expense were projected to a 1996 level using Telephone Plant Index (TPI) factors.

The 1989 Intercept database investment and software Right-to Use (RTU) expense were projected to a 1996 level using TPI factors. The 1989 Intercept database hardware maintenance and software support were assumed to remain constant through 1996.

The 1991 facilities investments were projected to a 1996 level using the appropriate TPI factor. The USWC transport and local switching costs were developed at a 1996 level. The USWC total annual messages and conversation minutes are from the 1996 USWC Switching Usage Model.

The 1996 Intercept expense per minute of use was input to USWICM where it was TPI'ed to a 1998 level.

USWC Cost Models Used

SCM
Transport Model

Additional Spreadsheets Used

See the Non Chargable Intercept Study for Excel spreadsheets

Qwest Default Values 5/30/02 9:43:47 AM

Mapping of Switching Module Investment Output to Investments for Unbundled Network Elements

END OFFICE SWITCHING

	CALL SET-UP INVESTMENTS			MINUTE INVESTMENTS			TOTAL
	Unit Set-Up Investment per Call	Average Hold Time per Call	Unit Set-Up Investment per Minute	Unit Investment per Conv. Minute	Conversation to Billed Ratio	Unit Investment per Billed Minute	Total Investment per Minute
All Times of Day	A	B	C=A/B	D	E	F=DxE	G=C+F
	sD p11 cC	sD p6 E6		sD p11 cB			
End Office Switching - Originating Interoffice	$.016556	2.58	$.006412	$.004361	1.0000	$.004361	$.010773
End Office Switching - Terminating Interoffice	$.015947	2.58	$.006176	$.004361	1.0000	$.004361	$.010537
End Office Switching - Average Interoffice	$.016251	2.58	$.006294	$.004361	1.0000	$.004361	$.010655
End Office Measurement [sD p11 C14]	$.000184	2.58	$.000071				$.000071
AMA Measurement [sD p6 E12]	$.003616	2.58	$.001401				$.001401
Polling [G46]	$.000292	2.58	$.000113				$.000113

Notes:

TANDEM SWITCHING

	CALL SET-UP INVESTMENTS			MINUTE INVESTMENTS			TOTAL INVESTMENTS		
	Unit Set-Up Investment per Call	Average Hold Time per Call	Unit Set-Up Investment per Minute	Unit Investment per Conv. Minute	Conversation to Billed Ratio	Unit Investment per Billed Minute	Total Unit Investment per Billed Minute	Units Required	Total Investment per Billed Minute
	A	B	C=A/B	D	E	F=DxE	G=C+F	H	I=GxH
				sD p10 B16					
Tandem Switching - Interoffice Set up [sD p10 C15]	$.004266	2.58	$.001652	$.003966	1.0000	$.003966	$.005618	1.0000	$.005618
AMA Measurement [sD p5 E12]	$.003616	2.58	$.001401						$.001401
Polling [G45]	$.000292	2.58	$.000113						$.000113

Notes:

Column H is the average number of Tandems required to switch a Local Interconnection call

Other Expenses and Investments

Description	**FRC**	**Investments/MOU Total**	**Investment Overrides**	**Direct Expense/MOU**	**Expense Overrides**
		AP p10 F9	**sD p5 cD**	**AP p10 F10**	**sD p5 cD**
Billing and Collection	361C	0.000111		0.000277	
				Intercept Study	
Intercept	117C			0.000016	
		Investments/Completed call (from Poll99.xls)			
AMA Measurement per completed call	377C	0.003616			
Polling	361C	0.000292			
Total				0.000293	
				I40+I42+I44+I45	

Qwest Default Values 5/30/02 9:43:47 AM

Mapping of Switching Module Investment Output to Investments for Local Interconnection Service

END OFFICE SWITCHING

	CALL SET-UP INVESTMENTS			MINUTE INVESTMENTS			TOTAL
	Unit Set-Up Investment per Call	Average Hold Time per Call	Unit Set-Up Investment per Minute	Unit Investment per Conv. Minute	Conversation to Billed Ratio	Unit Investment per Billed Minute	Total Investment per Minute
All Times of Day	A	B	C=A/B	D	E	F=DxE	G=C+F
	sD p10 cD	sD p5 E6		sD p10 cB			
End Office Switching - Originating Interoffice	$.005963	2.58	$.002309	$.004361	1.0000	$.004361	$.006670
End Office Switching - Terminating Interoffice	$.006031	2.58	$.002336	$.004361	1.0000	$.004361	$.006697
End Office Switching - Average Interoffice	$.005997	2.58	$.002323	$.004361	1.0000	$.004361	$.006684

TANDEM SWITCHING

	CALL SET-UP INVESTMENTS			MINUTE INVESTMENTS			TOTAL INVESTMENTS		
	Unit Set-Up Investment per Call	Average Hold Time per Call	Unit Set-Up Investment per Minute	Unit Investment per Conv. Minute	Conversation to Billed Ratio	Unit Investment per Billed Minute	Total Unit Investment per Billed Minute	Units Required	Total Investment per Billed Minute
	A	B	C=A/B	D	E	F=DxE	G=C+F	H	I=GxH
	sD p10 C15	sD p5 E6		sD p10 B16					
Tandem Switching - Interoffice Set up	$.001121	2.58	$.000434	$.003966	1.0000	$.003966	$.004400	1.0000	$.004400

Notes:

Column H is the average number of Tandems required to switch a Local Interconnection call

Other Expenses and Investments

		Investments/MOU			Investment Overrides	Direct Expense/MOU	Expense Overrides
Description	**FRC**	**Direct**	**Shared**	**Total**			
				AP p10 F9	**sD p5 cD**	**AP p10 F10**	**sD p5 cD**
Billing and Collection	361C			0.000111		0.000277	
						From Intercept Study	
Intercept	117C					0.000016	
				From HP Study			
HP Measurement	377C	0.000354	0.000000	0.000354		0.000050	
Total						0.000343	

6/26/02

Mapping of Transport Module Invvestment Output to Investment for Local Interconnection Service

All Times of Day

	FACILITIES				TERMINATIONS				
	Variable				Fixed				
FRC	Set-Up Inv. per Call per Mile	per Minute Inv. per Mile	Average Hold Time per Call	Inv. per Minute of Use per Mile	Set-Up Inv. per Call	per Minute Inv.	Average Hold Time per Call	Number of Termination Locations	Inv. per Minute of Use
	A	B	C	D=(A/C)+B	E	F	G	H	I=((E/G)+F)xH
OVER 0 TO 8									
357C	$.00000066	$.00000245	2.58	$.00000271	$.00021156	$.00078736	2.58	2.00	$.00173858
357CS	$.00000255	$.00000950	2.58	$.00001049	$.00025658	$.00095490	2.58	2.00	$.00210854
4C	$.00000272	$.00001011	2.58	$.00001116					
845C	$.00002045	$.00007609	2.58	$.00008401					
85C	$.00000121	$.00000449	2.58	$.00000496					
OVER 8 TO 25									
357C	$.00000066	$.00000245	2.58	$.00000271	$.00021156	$.00078736	2.58	2.00	$.00173858
357CS	$.00000255	$.00000950	2.58	$.00001049	$.00025658	$.00095490	2.58	2.00	$.00210854
4C	$.00000272	$.00001011	2.58	$.00001116					
845C	$.00002045	$.00007609	2.58	$.00008401					
85C	$.00000121	$.00000449	2.58	$.00000496					
OVER 25 TO 50									
357C	$.00000066	$.00000245	2.58	$.00000271	$.00021156	$.00078736	2.58	2.00	$.00173858
357CS	$.00000255	$.00000950	2.58	$.00001049	$.00025658	$.00095490	2.58	2.00	$.00210854
4C	$.00000272	$.00001011	2.58	$.00001116					
845C	$.00002045	$.00007609	2.58	$.00008401					
85C	$.00000121	$.00000449	2.58	$.00000496					
OVER 50									
357C	$.00000079	$.00000293	2.58	$.00000323	$.00021145	$.00078697	2.58	2.00	$.00173772
357CS	$.00000380	$.00001415	2.58	$.00001563	$.00020642	$.00076823	2.58	2.00	$.00169636
4C	$.00000135	$.00000502	2.58	$.00000554					
845C	$.00001015	$.00003777	2.58	$.00004170					
85C	$.00000060	$.00000223	2.58	$.00000246					
Average									
357C	$.00000075	$.00000279	2.58	$.00000308	$.00021151	$.00078716	2.58	2.00	$.00173815
357CS	$.00000385	$.00001431	2.58	$.00001580	$.00023165	$.00086213	2.58	2.00	$.00190368
4C	$.00000152	$.00000566	2.58	$.00000625					
845C	$.00001145	$.00004262	2.58	$.00004705					
85C	$.00000068	$.00000252	2.58	$.00000278					

Notes:

Columns A, B, E and F are from sD p13, DS0 Switched TM Output spreadsheet
Columns C and G are from sD p6, Usage Form.
Column H accounts for one each Termination located in End Office and Tandem

	A	B	C	D
1	Qwest Default Values 5/30/02 9:43:47 AM			
2	Switching Module Usage Outputs			
3	South Dakota	**Total Investments**		
4	**Investment Description**	**Generic With & WO SS7**	**With SS7**	**Without SS7**
5	**Switching Investment Totals**	Sum of TSLRI and Shared cB r21:r65		
6	End Office Switching - Intraoffice Set up [IAO MSGS]	0.007420		
7	End Office Switching - Intraoffice Conversation Minute [IAO MINS]	0.005058		
8	End Office Switching - Originating Interoffice Set up [IEO ORIG MSGS]		0.016556	0.005963
9	End Office Switching - Originating Interoffice Conversation Minute [IEO ORIG MINS]	0.004361		
10	End Office Switching - Terminating Interoffice Set up [IEO TERM MSGS]		0.015947	0.006031
11	End Office Switching - Terminating Interoffice Conversation Minute [IEO TERM MINS]	0.004361		
12	End Office Switching - Average Interoffice Set up [IEO MSG]		0.016251	0.005997
13	End Office Switching - Average Interoffice Conversation Minute [IEO MINS]	0.004361		
14	End Office Measurement - Interoffice Set up [MEAS MSGS]	0.000184		
15	Tandem Switching - Interoffice Set up [TANDEM MSGS]		0.004266	0.001121
16	Tandem Switching - Interoffice Conversation Minute [TANDEM MINS]	0.003966		
17	MDF OSP	27.710000		
18				
19	**Investments From Switching Module**	**With SS7**		
20	SM USAGE	**SCM_Usage**		
21	IAO MSGS TSLRI	0.005892		
22	IAO MSGS SHARED	0.001528		
23	IAO MINS TSLRI	0.004233		
24	IAO MINS SHARED	0.000825		
25	IEO MSGS TSLRI	0.007918		
26	IEO MSGS SHARED	0.008333		
27	IEO MINS TSLRI	0.003442		
28	IEO MINS SHARED	0.000919		
29	IEO ORIG MSGS TSLRI	0.007868		
30	IEO ORIG MSGS SHARED	0.008688		
31	IEO ORIG MINS TSLRI	0.003442		
32	IEO ORIG MINS SHARED	0.000919		
33	IEO TERM MSGS TSLRI	0.007969		
34	IEO TERM MSGS SHARED	0.007978		
35	IEO TERM MINS TSLRI	0.003442		
36	IEO TERM MINS SHARED	0.000919		
37	MEAS MSGS TSLRI	0.00002		
38	MEAS MSGS SHARED	0.000164		
39	MEAS MINS TSLRI	0		
40	MEAS MINS SHARED	0		
41	TANDEM MSGS TSLRI	0.002341		
42	TANDEM MSGS SHARED	0.001925		
43	TANDEM MINS TSLRI	0.003919		
44	TANDEM MINS SHARED	0.000047		
45	Percent IAO MOU (%)	62.93		
46	Investment Weightings (%) Day 8am - 5pm	82.8		
47	Investment Weightings (%) Evening/Night 5pm - 8am	17.2		
48	Usage Weightings (%) Day 8am - 5pm	58.76		
49	Usage Weightings (%) Evening/Night 5pm - 8am	41.24		
50	MDF COE Pair TSLRI	3.07		
51	MDF COE Pair SHARED	0.05		
52	**Without SS7**			
53	IEO MSGS TSLRI	0.004605		
54	IEO MSGS SHARED	0.001392		
55	IEO ORIG MSGS TSLRI	0.004445		
56	IEO ORIG MSGS SHARED	0.001518		
57	IEO TERM MSGS TSLRI	0.004765		
58	IEO TERM MSGS SHARED	0.001266		
59	TANDEM MSGS TSLRI	0.001108		
60	TANDEM MSGS SHARED	0.000013		
61	**MDF**			
62	MDF OSP Pair TSLRI	25.38		
63	MDF OSP Pair SHARED	2.33		
64				
65				
66	NTS COE TSLRI	62.73		
67	NTS COE Shared	8.45		

Cell: A6
Comment: Total TSLRI and Shared IAO MSGS investments.

Cell: A7
Comment: Total TSLRI and Shared IAO MINS investments.

Cell: A8
Comment: Total TSLRI and Shared IEO ORIG MSGS investments.

Cell: A9
Comment: Total TSLRI and Shared IEO ORIG MINS investments.

Cell: A10
Comment: Total TSLRI and Shared IEO TERM MSGS investments.

Cell: A11
Comment: Total TSLRI and Shared IEO TERM MINS investments.

Cell: A12
Comment: Total TSLRI and Shared IEO MSGS investments.

Cell: A13
Comment: Total TSLRI and Shared IEO MINS investments.

Cell: A14
Comment: Total TSLRI and Shared MEAS MSGS investments.

Cell: A15
Comment: Total TSLRI and Shared TANDEM MSGS investments.

Cell: A16
Comment: Total TSLRI and Shared TANDEM MINS investments.

Cell: A17
Comment: Total TSLRI and Shared MDF OSP investments.

Section D - Local Traffic
DS0 Switched TM Output

Qwest Default Values 5/30/02 9:43:47 AM

South Dakota

Type of cost	Mileage Band	Fixed or DISTANCE SENSITIVE	FRC	TOTAL DIRECT	NETWORK SUPPORT	Total Investment
Conversation Minute	Over 0 to 8	Fixed	357CS	0.00095490	0.00000000	0.00095490
Conversation Minute	Over 0 to 8	Fixed	357C	0.00077722	0.00001013	0.00078736
Conversation Minute	Over 0 to 8	Variable	357CS	0.00000950	0.00000000	0.00000950
Conversation Minute	Over 0 to 8	Variable	357C	0.00000242	0.00000004	0.00000245
Conversation Minute	Over 0 to 8	Variable	4C	0.00000621	0.00000390	0.00001011
Conversation Minute	Over 0 to 8	Variable	85C	0.00000276	0.00000173	0.00000449
Conversation Minute	Over 0 to 8	Variable	845C	0.00004675	0.00002934	0.00007609
Setup Time	Over 0 to 8	Fixed	357CS	0.00025658	0.00000000	0.00025658
Setup Time	Over 0 to 8	Fixed	357C	0.00020884	0.00000272	0.00021156
Setup Time	Over 0 to 8	Variable	357CS	0.00000255	0.00000000	0.00000255
Setup Time	Over 0 to 8	Variable	357C	0.00000065	0.00000001	0.00000066
Setup Time	Over 0 to 8	Variable	4C	0.00000167	0.00000105	0.00000272
Setup Time	Over 0 to 8	Variable	85C	0.00000074	0.00000047	0.00000121
Setup Time	Over 0 to 8	Variable	845C	0.00001256	0.00000788	0.00002045
Conversation Minute	Over 8 to 25	Fixed	357CS	0.00095490	0.00000000	0.00095490
Conversation Minute	Over 8 to 25	Fixed	357C	0.00077722	0.00001013	0.00078736
Conversation Minute	Over 8 to 25	Variable	357CS	0.00000950	0.00000000	0.00000950
Conversation Minute	Over 8 to 25	Variable	357C	0.00000242	0.00000004	0.00000245
Conversation Minute	Over 8 to 25	Variable	4C	0.00000621	0.00000390	0.00001011
Conversation Minute	Over 8 to 25	Variable	85C	0.00000276	0.00000173	0.00000449
Conversation Minute	Over 8 to 25	Variable	845C	0.00004675	0.00002934	0.00007609
Setup Time	Over 8 to 25	Fixed	357CS	0.00025658	0.00000000	0.00025658
Setup Time	Over 8 to 25	Fixed	357C	0.00020884	0.00000272	0.00021156
Setup Time	Over 8 to 25	Variable	357CS	0.00000255	0.00000000	0.00000255
Setup Time	Over 8 to 25	Variable	357C	0.00000065	0.00000001	0.00000066
Setup Time	Over 8 to 25	Variable	4C	0.00000167	0.00000105	0.00000272
Setup Time	Over 8 to 25	Variable	85C	0.00000074	0.00000047	0.00000121
Setup Time	Over 8 to 25	Variable	845C	0.00001256	0.00000788	0.00002045
Conversation Minute	Over 25 to 50	Fixed	357CS	0.00095490	0.00000000	0.00095490
Conversation Minute	Over 25 to 50	Fixed	357C	0.00077722	0.00001013	0.00078736
Conversation Minute	Over 25 to 50	Variable	357CS	0.00000950	0.00000000	0.00000950
Conversation Minute	Over 25 to 50	Variable	357C	0.00000242	0.00000004	0.00000245
Conversation Minute	Over 25 to 50	Variable	4C	0.00000621	0.00000390	0.00001011
Conversation Minute	Over 25 to 50	Variable	85C	0.00000276	0.00000173	0.00000449
Conversation Minute	Over 25 to 50	Variable	845C	0.00004675	0.00002934	0.00007609
Setup Time	Over 25 to 50	Fixed	357CS	0.00025658	0.00000000	0.00025658
Setup Time	Over 25 to 50	Fixed	357C	0.00020884	0.00000272	0.00021156
Setup Time	Over 25 to 50	Variable	357CS	0.00000255	0.00000000	0.00000255
Setup Time	Over 25 to 50	Variable	357C	0.00000065	0.00000001	0.00000066
Setup Time	Over 25 to 50	Variable	4C	0.00000167	0.00000105	0.00000272
Setup Time	Over 25 to 50	Variable	85C	0.00000074	0.00000047	0.00000121
Setup Time	Over 25 to 50	Variable	845C	0.00001256	0.00000788	0.00002045
Conversation Minute	Over 50	Fixed	357CS	0.00076823	0.00000000	0.00076823
Conversation Minute	Over 50	Fixed	357C	0.00078278	0.00000418	0.00078697
Conversation Minute	Over 50	Variable	357CS	0.00001415	0.00000000	0.00001415
Conversation Minute	Over 50	Variable	357C	0.00000288	0.00000005	0.00000293
Conversation Minute	Over 50	Variable	4C	0.00000308	0.00000194	0.00000502
Conversation Minute	Over 50	Variable	85C	0.00000137	0.00000086	0.00000223
Conversation Minute	Over 50	Variable	845C	0.00002320	0.00001456	0.00003777
Setup Time	Over 50	Fixed	357CS	0.00020642	0.00000000	0.00020642
Setup Time	Over 50	Fixed	357C	0.00021033	0.00000112	0.00021145
Setup Time	Over 50	Variable	357CS	0.00000380	0.00000000	0.00000380
Setup Time	Over 50	Variable	357C	0.00000077	0.00000001	0.00000079
Setup Time	Over 50	Variable	4C	0.00000083	0.00000052	0.00000135
Setup Time	Over 50	Variable	85C	0.00000037	0.00000023	0.00000060
Setup Time	Over 50	Variable	845C	0.00000623	0.00000391	0.00001015
Conversation Minute	All	Fixed	357CS	0.00086213	0.00000000	0.00086213
Conversation Minute	All	Fixed	357C	0.00077999	0.00000718	0.00078716
Conversation Minute	All	Variable	357CS	0.00001431	0.00000000	0.00001431
Conversation Minute	All	Variable	357C	0.00000274	0.00000005	0.00000279
Conversation Minute	All	Variable	4C	0.00000348	0.00000218	0.00000566
Conversation Minute	All	Variable	85C	0.00000155	0.00000097	0.00000252
Conversation Minute	All	Variable	845C	0.00002618	0.00001643	0.00004262
Setup Time	All	Fixed	357CS	0.00023165	0.00000000	0.00023165
Setup Time	All	Fixed	357C	0.00020958	0.00000193	0.00021151
Setup Time	All	Variable	357CS	0.00000385	0.00000000	0.00000385
Setup Time	All	Variable	357C	0.00000074	0.00000001	0.00000075
Setup Time	All	Variable	4C	0.00000093	0.00000059	0.00000152
Setup Time	All	Variable	85C	0.00000042	0.00000026	0.00000068
Setup Time	All	Variable	845C	0.00000704	0.00000442	0.00001145

These are investments outputs from the Transport Module.

Section D - Local Traffic
Hold Times

STATE	ORIG & TERM LOCAL MOU	NCTR	ORIG & TERM CONV MOU	O : T	ORIG CONV MOU	LOCAL ATTS	FDO RATIO	FULLY DIALED ATTS	COMP RATIO	COMP LOCAL MSGS	LOCAL ALOC
A	B	C	D=B*(1-C)	E	F=D*E	G	H	I=G*H	J	K=I*J	L=F/K
South Dakota	3,482,235,424	0.1338	3,016,278,547	0.5	1,508,139,273	743,028,623	0.9471	703,713,641	0.83	584,082,322	2.58

Cell: B2
Comment: Data comes from Separations Office Sample from May 1999 - April 2000

Cell: C2
Comment: NCTR is the Non-Conversation Time Ratio which is used to remove minutes of use that occur during dialing and set up.

Cell: E2
Comment: O:T is the ratio of originating to terminating MOUs

Cell: H2
Comment: FDO ratio is used to remove abandoned call attempts that are not completely dialed

Cell: J2
Comment: Completion Ratio is used to remove call attempts that are not completed because the other end never went off hook; such as busy line and no answer.

Section E - Entrance Facilitie[illegible] Direct Trunked Transport
DS1 - Develop Total Prod Costs

Row	Qwest Default Values 5/30/02 9:43:47 AM South Dakota	Source or Calculation	Factor Value [AP p1 cB]	DS1 DS1 Entrance Facility	Multiplexing DS1 to DS0	Over 0 to 8 Miles, Fixed	Over 0 to 8 Miles, Per Air Mile	Over 8 to 25 Miles, Fixed	Over 8 to 25 Miles, Per Air Mile	Over 25 to 50 Miles, Fixed	Over 25 to 50 Miles, Per Air Mile	Over 50 Miles, Fixed	Over 50 Miles, Per Air Mile
			A	B	C	D	E	F	G	H	I	J	K
1	**Investment**	sE p9-11 cD Total		5859.48	13662.97	3333.85	157.51	3333.85	157.51	3333.85	157.51	2968.98	102.85
2													
3	Investment Based Costs (IBC)	sE p9-11 cJ Total		91.84096	211.20019	54.98761	2.23009	54.98761	2.23009	54.98761	2.23009	48.96962	1.51384
4	Element Specific Expenses	AP p3 F41*r3		0.39528	0.90901	0.23667	0.00960	0.23667	0.00960	0.23667	0.00960	0.21077	0.00652
5	***Total IBC + Element Specific Expenses***	*r3 + r4*		92.23624	212.10920	55.22428	2.23968	55.22428	2.23968	55.22428	2.23968	49.18039	1.52035
6													
7	***Marketing & Business Fees***												
8	Product Management Expense	cA*r5	0.01996	1.84078	4.23311	1.10212	0.04470	1.10212	0.04470	1.10212	0.04470	0.98150	0.03034
9	Sales Expense	cA*r5	0.01188	1.09551	2.51928	0.65591	0.02660	0.65591	0.02660	0.65591	0.02660	0.58413	0.01806
10	Product Advertising Expense	cA*r5	0.00000	0.00000	0.00000	0.00000	0.00000	0.00000	0.00000	0.00000	0.00000	0.00000	0.00000
11	Business Fees (Other Operating Taxes)	cA*(r5+r8:r10)	0.00148	0.14115	0.32460	0.08451	0.00343	0.08451	0.00343	0.08451	0.00343	0.07526	0.00233
12	***Marketing & Business Fees Total***	*Sum r8:r11*		3.07744	7.07698	1.84255	0.07473	1.84255	0.07473	1.84255	0.07473	1.64089	0.05073
13													
14	***Sub-Total Expenses***	*r5 + r12*		95.31368	219.18618	57.06683	2.31441	57.06683	2.31441	57.06683	2.31441	50.82128	1.57108
15													
16	***Other Direct Expenses***												
17	Network Operations	cA*r14	0.03483	3.31995	7.63465	1.98774	0.08062	1.98774	0.08062	1.98774	0.08062	1.77020	0.05472
18	Network Support Assets	cA*r14	0.01470	1.40144	3.22280	0.83908	0.03403	0.83908	0.03403	0.83908	0.03403	0.74725	0.02310
19	General Support Assets	cA*r14	0.08874	8.45834	19.45105	5.06423	0.20539	5.06423	0.20539	5.06423	0.20539	4.50999	0.13942
20	General Purpose Computers	cA*r14	0.04334	4.13110	9.50000	2.47340	0.10031	2.47340	0.10031	2.47340	0.10031	2.20270	0.06809
21	Uncollectible - Interconnect	cA*r14	0.00379	0.36085	0.82983	0.21605	0.00876	0.21605	0.00876	0.21605	0.00876	0.19241	0.00595
22	Accounting and Finance Expense	cA*r14	0.00735	0.70015	1.61009	0.41920	0.01700	0.41920	0.01700	0.41920	0.01700	0.37332	0.01154
23	Human Resources Expense	cA*r14	0.00829	0.79050	1.81786	0.47329	0.01919	0.47329	0.01919	0.47329	0.01919	0.42150	0.01303
24	Information Management Expense	cA*r14	0.07089	6.75649	15.53743	4.04529	0.16406	4.04529	0.16406	4.04529	0.16406	3.60256	0.11137
25	Intangibles	cA*r14	0.00000	0.00000	0.00000	0.00000	0.00000	0.00000	0.00000	0.00000	0.00000	0.00000	0.00000
26	***Total Other Direct Expenses***	*Sum r17:r25*		25.91883	59.60371	15.51829	0.62936	15.51829	0.62936	15.51829	0.62936	13.81993	0.42723
27													
28	***Total Element Long Run Incremental Costs***	*r 14 + r26*		121.23251	278.78989	72.58512	2.94377	72.58512	2.94377	72.58512	2.94377	64.64121	1.99831
29													
30	***Common***												
31	Executive Expense	cA*r28	0.01127	1.36599	3.14126	0.81785	0.03317	0.81785	0.03317	0.81785	0.03317	0.72834	0.02252
32	Planning Expense	cA*r28	0.00053	0.06369	0.14646	0.03813	0.00155	0.03813	0.00155	0.03813	0.00155	0.03396	0.00105
33	External Relations Expense	cA*r28	0.03785	4.58818	10.55111	2.74706	0.11141	2.74706	0.11141	2.74706	0.11141	2.44642	0.07563
34	Legal Expense	cA*r28	0.00472	0.57190	1.31516	0.34241	0.01389	0.34241	0.01389	0.34241	0.01389	0.30494	0.00943
35	Other Procurement Expense	cA*r28	0.00186	0.22543	0.51841	0.13497	0.00547	0.13497	0.00547	0.13497	0.00547	0.12020	0.00372
36	Research and Development Expense	cA*r28	0.00001	0.00071	0.00164	0.00043	0.00002	0.00043	0.00002	0.00043	0.00002	0.00038	0.00001
37	Other General and Admin Exp	cA*r28	0.01506	1.82622	4.19964	1.09341	0.04434	1.09341	0.04434	1.09341	0.04434	0.97374	0.03010
38	***Total Common Costs***	*Sum r31:r37*		8.64212	19.87368	5.17427	0.20985	5.17427	0.20985	5.17427	0.20985	4.60798	0.14245
39													
40	***TELRIC + Common***	*r27 + r38*		129.87	298.66	77.76	3.15	77.76	3.15	77.76	3.15	69.25	2.14

c = column, r = row, s = section, p = page, AP = Appendix

Qwest Default Values 5/30/02 9:43:47 AM

DS3

Row	South Dakota	Source or Calculation	Factor Value [AP p1 cB]	DS3 Entrance Facility	Multiplexing DS3 to DS1	Over 0 to 8 Miles, Fixed	Over 0 to 8 Miles, Per Air Mile	Over 8 to 25 Miles, Fixed	Over 8 to 25 Miles, Per Air Mile	Over 25 to 50 Miles, Fixed	Over 25 to 50 Miles, Per Air Mile	Over 50 Miles, Fixed	Over 50 Miles, Per Air Mile
			A	B	C	D	E	F	G	H	I	J	K
1	**Investment**	sE p12-14 cD Total		$23,800.79	$15,554.00	18992.72	1581.99	18992.72	1581.99	18992.72	1581.99	16242.92	886.87
2													
3	Investment Based Costs (IBC)	sE p12-14 cJ Total		366.3041	240.4315	313.26112	22.06888	313.26112	22.06888	313.26112	22.06888	267.90668	13.09700
4	Element Specific Expenses	AP p3 F41*r3		1.5766	1.0348	1.3483	0.0950	1.3483	0.0950	1.3483	0.0950	1.1531	0.0564
5	***Total IBC + Element Specific Expenses***	***r3 + r4***		367.8807	241.4663	314.6094	22.1639	314.6094	22.1639	314.6094	22.1639	269.0598	13.1534
6													
7	***Marketing & Business Fees***												
8	Product Management Expense	cA*r5	0.01996	7.3419	4.8190	6.2787	0.4423	6.2787	0.4423	6.2787	0.4423	5.3697	0.2625
9	Sales Expense	cA*r5	0.01188	4.3694	2.8680	3.7367	0.2632	3.7367	0.2632	3.7367	0.2632	3.1957	0.1562
10	Product Advertising Expense	cA*r5	0.00000	0.0000	0.0000	0.0000	0.0000	0.0000	0.0000	0.0000	0.0000	0.0000	0.0000
11	Business Fees (Other Operating Taxes)	cA*(r5+r8:r10)	0.00148	0.5630	0.3695	0.4815	0.0339	0.4815	0.0339	0.4815	0.0339	0.4118	0.0201
12	***Marketing & Business Fees Total***	***Sum r8:r11***		12.2743	8.0565	10.4969	0.7395	10.4969	0.7395	10.4969	0.7395	8.9771	0.4389
13													
14	***Sub-Total Expenses***	***r5 + r12***		380.1549	249.5228	325.1063	22.9034	325.1063	22.9034	325.1063	22.9034	278.0369	13.5922
15													
16	***Other Direct Expenses***												
17	Network Operations	cA*r14	0.03483	13.2415	8.6913	11.3240	0.7978	11.3240	0.7978	11.3240	0.7978	9.6845	0.4734
18	Network Support Assets	cA*r14	0.01470	5.5896	3.6689	4.7802	0.3368	4.7802	0.3368	4.7802	0.3368	4.0881	0.1995
19	General Support Assets	cA*r14	0.08874	33.7358	22.1432	28.8506	2.0325	28.8506	2.0325	28.8506	2.0325	24.6736	1.2062
20	General Purpose Computers	cA*r14	0.04334	16.4767	10.8149	14.0908	0.9927	14.0908	0.9927	14.0908	0.9927	12.0507	0.5891
21	Uncollectible - Interconnect	cA*r14	0.00379	1.4392	0.9447	1.2308	0.0867	1.2308	0.0867	1.2308	0.0867	1.0526	0.0515
22	Accounting and Finance Expense	cA*r14	0.00735	2.7925	1.8329	2.3882	0.1682	2.3882	0.1682	2.3882	0.1682	2.0424	0.0998
23	Human Resources Expense	cA*r14	0.00829	3.1529	2.0695	2.6963	0.1900	2.6963	0.1900	2.6963	0.1900	2.3060	0.1127
24	Information Management Expense	cA*r14	0.07089	26.9480	17.6879	23.0458	1.6235	23.0458	1.6235	23.0458	1.6235	19.7092	0.9639
25	Intangibles	cA*r14	0.00000	0.0000	0.0000	0.0000	0.0000	0.0000	0.0000	0.0000	0.0000	0.0000	0.0000
26	***Total Other Direct Expenses***	***Sum r17:r25***		103.3762	67.8532	88.4068	6.2282	88.4068	6.2282	88.4068	6.2282	75.6071	3.6962
27													
28	***Total Element Long Run Incremental Costs***	***r 14 + r26***		**483.5312**	**317.3760**	**413.5130**	**29.1315**	**413.5130**	**29.1315**	**413.5130**	**29.1315**	**353.6440**	**17.2884**
29													
30	***Common***												
31	Executive Expense	cA*r28	0.01127	5.4482	3.5760	4.6593	0.3282	4.6593	0.3282	4.6593	0.3282	3.9847	0.1948
32	Planning Expense	cA*r28	0.00053	0.2540	0.1667	0.2172	0.0153	0.2172	0.0153	0.2172	0.0153	0.1858	0.0091
33	External Relations Expense	cA*r28	0.03785	18.2998	12.0114	15.6499	1.1025	15.6499	1.1025	15.6499	1.1025	13.3840	0.6543
34	Legal Expense	cA*r28	0.00472	2.2810	1.4972	1.9507	0.1374	1.9507	0.1374	1.9507	0.1374	1.6683	0.0816
35	Other Procurement Expense	cA*r28	0.00186	0.8991	0.5902	0.7689	0.0542	0.7689	0.0542	0.7689	0.0542	0.6576	0.0321
36	Research and Development Expense	cA*r28	0.00001	0.0028	0.0019	0.0024	0.0002	0.0024	0.0002	0.0024	0.0002	0.0021	0.0001
37	Other General and Admin Exp	cA*r28	0.01506	7.2838	4.7809	6.2291	0.4388	6.2291	0.4388	6.2291	0.4388	5.3272	0.2604
38	***Total Common Costs***	***Sum r31:r37***		**34.4688**	**22.6243**	**29.4775**	**2.0767**	**29.4775**	**2.0767**	**29.4775**	**2.0767**	**25.2097**	**1.2324**
39													
40	***TELRIC + Common***	***r27 + r38***		**$518.00**	**$340.00**	**$442.99**	**$31.21**	**$442.99**	**$31.21**	**$442.99**	**$31.21**	**$378.85**	**$18.52**

c = column, r = row, s = section, p = page, AP = Appendix

DS1-Investment Cost Calculation

	A	B	C	D	E	F	G	H	I	J
1	Qwest Default Values 5/30/02 9:43:47 AM						DS1			
2	South Dakota			Investment	Depreciation	Cost of Money	Income Tax	Ad Valorem	Maintenance	Total Capital Costs
3	Acct	FRC	Account Name		cD*(AP p7 cA)/12	cD*(AP p7 cB)/12	cD*(AP p7 cC)/12	cD*(AP p7 cD)/12	cD*(AP p7 cE)/12	sum(cE:cI)
4	**DS1 Entrance Facility**									
5	2111	20C	Land	7.7438	0.000000	0.062278	0.023551	0.006160	0.008241	0.100230
6	2121	110C	Building	414.6506	0.892220	2.587039	0.978324	0.329866	0.441269	5.228717
7	2232.3	357C	Other Digital Equipment	472.4789	4.319928	1.789692	0.676797	0.375870	1.003619	8.165906
8	2232.2	257C	Pair Gain—Digital	1188.3339	10.865071	4.501264	1.702215	0.945353	1.042634	19.056537
9	2232.2	257CP	Pair Gain—Digital	482.4177	4.410800	1.827340	0.691033	0.383777	0.423269	7.736219
10	2232.2	257CS	Pair Gain—Digital	414.1764	3.786862	1.568850	0.593282	0.329489	0.363395	6.641878
11	2232.2	257CSP	Pair Gain—Digital	642.6541	5.875859	2.434296	0.920562	0.511249	0.563859	10.305826
12	2411	1C	Poles	27.7969	0.283927	0.085460	0.032318	0.022113	0.006824	0.430641
13	2431	3C	Aerial Wire	3.5971	0.082135	0.027485	0.010394	0.002862	0.007339	0.130215
14	2421.11,.21	52C	Aerial Cbl Metallic	29.3402	0.257219	0.132951	0.050277	0.023341	0.271581	0.735370
15	2421.11	42C	Aerial Drop	18.4756	0.161972	0.083720	0.031660	0.014698	0.171016	0.463065
16	2422.11,.21	5C	UG Cbl Metallic	55.9213	0.424009	0.261910	0.099045	0.044487	0.142671	0.972121
17	2422.12,.22	85C	UG Cbl Nonmetallic	144.2378	0.850304	0.679810	0.257080	0.114745	0.227184	2.129123
18	2423.11,.21	45C	Buried Cbl Metallic	818.3720	4.153401	3.891322	1.471557	0.651038	3.588732	13.756049
19	2423.11	35C	Buried Drop	116.6821	0.592185	0.554818	0.209812	0.092824	0.511675	1.961314
20	2423.12,.22	845C	Buried Cbl Nonmetallic	822.9219	4.176493	3.912957	1.479738	0.654657	1.582404	11.806249
21	2426.1	62C	Intrabuilding Cbl., Exch., Metallic	19.1178	0.099878	0.092995	0.035167	0.015209	0.055949	0.299198
22	2426.2	862C	Intrabuilding Cbl., Exch., Nonmetallic	2.0570	0.010747	0.010006	0.003784	0.001636	0.003061	0.029234
23	2441	4C	Conduit System	178.5061	0.318976	0.960960	0.363400	0.142007	0.107723	1.893065
24			**Total**	**5659.4813**	**41.561984**	**25.465150**	**9.629995**	**4.661382**	**10.522446**	**91.840956**
25	**MULTIPLEXING DS1 TO DSO**									
26	2111	20C	Land	42.3659	0.000000	0.340715	0.128846	0.033703	0.045086	0.548350
27	2121	110C	Building	2268.5174	4.881255	14.153463	5.352325	1.804669	2.414143	28.605856
28	2232.3	257C	Other Digital Equipment	11352.0840	103.793391	43.000313	16.261156	9.030901	9.960224	182.045985
29			**Total**	**13662.9673**	**108.674647**	**57.494491**	**21.742328**	**10.869273**	**12.419452**	**211.200191**
30										
31	**DS1 DIRECT TRUNKED TRANSPORT**									
32	**OVER 0 TO 8**		**FIXED**							
33		20C	Land	10.34	0.0000	0.0831	0.0314	0.0082	0.0110	0.1338
34		110C	Building	553.53	1.1911	3.4535	1.3060	0.4404	0.5891	6.9800
35		357CS	Other Digital Equipment	1311.79	11.9939	4.9689	1.8791	1.0436	2.7864	22.6718
36		357C	Other Digital Equipment	1458.19	13.3324	5.5234	2.0888	1.1600	3.0974	25.2020
37			**Total**	**3333.85**	**26.5173**	**14.0290**	**5.3053**	**2.6522**	**6.4839**	**54.9876**
38	**OVER 0 TO 8**		**VARIABLE**							
39		20C	Land	0.04	0.0000	0.0003	0.0001	0.0000	0.0000	0.0005
40		110C	Building	2.27	0.0049	0.0142	0.0054	0.0018	0.0024	0.0286
41		357CS	Other Digital Equipment	9.21	0.0842	0.0349	0.0132	0.0073	0.0196	0.1592
42		357C	Other Digital Equipment	2.15	0.0197	0.0081	0.0031	0.0017	0.0046	0.0372
43		4C	Conduit System	16.61	0.0297	0.0894	0.0338	0.0132	0.0100	0.1761
44		85C	UG Cbl Nonmetallic	7.38	0.0435	0.0348	0.0132	0.0059	0.0116	0.1089
45		845C	Buried Cbl Nonmetallic	119.85	0.6083	0.5699	0.2155	0.0953	0.2305	1.7195
46			**Total**	**157.51**	**0.7902**	**0.7516**	**0.2842**	**0.1253**	**0.2787**	**2.2301**

Section E - Entrance Facilities and Direct Trunked Transport
DS1-Investment Cost Calculation

	A	B	C	D	E	F	G	H	I	J
1	Qwest Default Values 5/30/02 9:43:47 AM						DS1			
2	South Dakota			Investment	Depreciation	Cost of Money	Income Tax	Ad Valorem	Maintenance	Total Capital Costs
3	Acct	FRC	Account Name		cD*(AP p7 cA)/12	cD*(AP p7 cB)/12	cD*(AP p7 cC)/12	cD*(AP p7 cD)/12	cD*(AP p7 cE)/12	sum(cE:cI)
47	OVER 8 TO 25		FIXED							
48		20C	Land	10.34	0.0000	0.0831	0.0314	0.0082	0.0110	0.1338
49		110C	Building	553.53	1.1911	3.4535	1.3060	0.4404	0.5891	6.9800
50		357CS	Other Digital Equipment	1311.79	11.9939	4.9689	1.8791	1.0436	2.7864	22.6718
51		357C	Other Digital Equipment	1458.19	13.3324	5.5234	2.0888	1.1600	3.0974	25.2020
52			**Total**	**3333.85**	**26.5173**	**14.0290**	**5.3053**	**2.6522**	**6.4839**	**54.9876**
53	OVER 8 TO 25		VARIABLE							
54		20C	Land	0.04	0.0000	0.0003	0.0001	0.0000	0.0000	0.0005
55		110C	Building	2.27	0.0049	0.0142	0.0054	0.0018	0.0024	0.0286
56		357CS	Other Digital Equipment	9.21	0.0842	0.0349	0.0132	0.0073	0.0196	0.1592
57		357C	Other Digital Equipment	2.15	0.0197	0.0081	0.0031	0.0017	0.0046	0.0372
58		4C	Conduit System	16.61	0.0297	0.0894	0.0338	0.0132	0.0100	0.1761
59		85C	UG Cbl Nonmetallic	7.38	0.0435	0.0348	0.0132	0.0059	0.0116	0.1089
60		845C	Buried Cbl Nonmetallic	119.85	0.6083	0.5699	0.2155	0.0953	0.2305	1.7195
61			**Total**	**157.51**	**0.7902**	**0.7516**	**0.2842**	**0.1253**	**0.2787**	**2.2301**
62	OVER 25 TO 50		FIXED							
63		20C	Land	10.34	0.0000	0.0831	0.0314	0.0082	0.0110	0.1338
64		110C	Building	553.53	1.1911	3.4535	1.3060	0.4404	0.5891	6.9800
65		357CS	Other Digital Equipment	1311.79	11.9939	4.9689	1.8791	1.0436	2.7864	22.6718
66		357C	Other Digital Equipment	1458.19	13.3324	5.5234	2.0888	1.1600	3.0974	25.2020
67			**Total**	**3333.85**	**26.5173**	**14.0290**	**5.3053**	**2.6522**	**6.4839**	**54.9876**
68	OVER 25 TO 50		VARIABLE							
69		20C	Land	0.04	0.0000	0.0003	0.0001	0.0000	0.0000	0.0005
70		110C	Building	2.27	0.0049	0.0142	0.0054	0.0018	0.0024	0.0286
71		357CS	Other Digital Equipment	9.21	0.0842	0.0349	0.0132	0.0073	0.0196	0.1592
72		357C	Other Digital Equipment	2.15	0.0197	0.0081	0.0031	0.0017	0.0046	0.0372
73		4C	Conduit System	16.61	0.0297	0.0894	0.0338	0.0132	0.0100	0.1761
74		85C	UG Cbl Nonmetallic	7.38	0.0435	0.0348	0.0132	0.0059	0.0116	0.1089
75		845C	Buried Cbl Nonmetallic	119.85	0.6083	0.5699	0.2155	0.0953	0.2305	1.7195
76			**Total**	**157.51**	**0.7902**	**0.7516**	**0.2842**	**0.1253**	**0.2787**	**2.2301**
77	OVER 50		FIXED							
78		20C	Land	9.21	0.0000	0.0740	0.0280	0.0073	0.0098	0.1192
79		110C	Building	492.95	1.0607	3.0756	1.1631	0.3922	0.5246	6.2161
80		357CS	Other Digital Equipment	1008.42	9.2201	3.8198	1.4445	0.8022	2.1420	17.4286
81		357C	Other Digital Equipment	1458.40	13.3344	5.5243	2.0891	1.1602	3.0979	25.2058
82			**Total**	**2968.98**	**23.6151**	**12.4936**	**4.7246**	**2.3619**	**5.7743**	**48.9696**

Section E - Entrance Facilities and Direct Trunked Transport
DS1-Investment Cost Calculation

	A	B	C	D	E	F	G	H	I	J
1	Qwest Default Values 5/30/02 9:43:47 AM						DS1			
2	South Dakota			Investment	Depreciation	Cost of Money	Income Tax	Ad Valorem	Maintenance	Total Capital Costs
3	Acct	FRC	Account Name		cD*(AP p7 cA)/12	cD*(AP p7 cB)/12	cD*(AP p7 cC)/12	cD*(AP p7 cD)/12	cD*(AP p7 cE)/12	sum(cE:cI)
83	OVER 50		VARIABLE							
84		20C	Land	0.10	0.0000	0.0008	0.0003	0.0001	0.0001	0.0012
85		110C	Building	5.16	0.0111	0.0322	0.0122	0.0041	0.0055	0.0650
86		357CS	Other Digital Equipment	21.80	0.1993	0.0826	0.0312	0.0173	0.0463	0.3767
87		357C	Other Digital Equipment	4.01	0.0367	0.0152	0.0057	0.0032	0.0085	0.0694
88		4C	Conduit System	8.00	0.0143	0.0431	0.0163	0.0064	0.0048	0.0849
89		85C	UG Cbl Nonmetallic	3.56	0.0210	0.0168	0.0063	0.0028	0.0056	0.0525
90		845C	Buried Cbl Nonmetallic	60.23	0.3057	0.2864	0.1083	0.0479	0.1158	0.8641
91			**Total**	**102.85**	**0.5880**	**0.4770**	**0.1804**	**0.0818**	**0.1867**	**1.5138**
92	**Investment Sources**									
93	Land = (AP p12 B10) * (377C + 57C+257C+257CS+357C+357CS)					Building = (AP p12 C10) *(377C+57C+257C+257CS+357C+357CS)				
94	Entrance Facility and Mux = sE p15 cE									
95	Direct Trunk Transport = sE p18 cG									

	A	B	C	D	E	F	G	H	I	J
1	Qwest Default Values 5/30/02 9:43:47 AM						DS3			
2	South Dakota			Investment	Depreciation	Cost of Money	Income Tax	Ad Valorem	Maintenance	Total Capital Costs
3	Acct	FRC	Account Name		cD*(AP p7 cA)/12	cD*(AP p7 cB)/12	cD*(AP p7 cC)/12	cD*(AP p7 cD)/12	cD*(AP p7 cE)/12	sum(cE:cI)
4	**DS3 Entrance Facility**									
5	2111	20C	Land	7.6292	0.0000	0.0614	0.0232	0.0061	0.0081	0.0987
6	2121	110C	Building	408.5101	0.8790	2.5487	0.9638	0.3250	0.4347	5.1513
7	2232.3	357C	Other Digital Equipment	1798.6667	16.4454	6.8131	2.5765	1.4309	3.8206	31.0866
8	2232.2	257C	Pair Gain—Digital	166.4319	1.5217	0.6304	0.2384	0.1324	0.1460	2.6690
9	2232.2	257CS	Pair Gain—Digital	4845.6468	44.3043	18.3547	6.9411	3.8548	4.2515	77.7065
10	2232.2	257CP	Pair Gain—Digital	79.1619	0.7238	0.2999	0.1134	0.0630	0.0695	1.2695
11	2232.2	257CSP	Pair Gain—Digital	9398.1490	85.9283	35.5990	13.4623	7.4765	8.2459	150.7120
12	2422.12,.22	85C	UG Cbl Nonmetallic	599.6714	3.5352	2.8263	1.0688	0.4771	0.9445	8.8519
13	2423.12,.22	845C	Buried Cbl Nonmetallic	5283.5355	26.8150	25.1230	9.5006	4.2032	10.1598	75.8015
14	2426.2	862C	Intrabuilding Cbl., Exch., Nonmetallic	24.7144	0.1291	0.1202	0.0455	0.0197	0.0368	0.3512
15	2441	4C	Conduit System	1188.6769	2.1241	6.3991	2.4199	0.9456	0.7173	12.6060
16			**Total**	**23800.7939**	**182.4059**	**98.7758**	**37.3534**	**18.9342**	**28.8348**	**366.3041**
17	**MULTIPLEXING DS3 TO DS1**									
18	2111	20C	Land	48.2296	0.0000	0.3879	0.1467	0.0384	0.0513	0.6242
19	2121	110C	Building	2582.4934	5.5568	16.1124	6.0931	2.0544	2.7483	32.5651
20	2232.3	257C	Other Digital Equipment	12923.2784	118.1590	48.9518	18.5118	10.2808	11.3388	207.2422
21			**Total**	**15554.0013**	**123.7158**	**65.4521**	**24.7516**	**12.3736**	**14.1384**	**240.4315**
22										
23	**DS3 DIRECT TRUNKED TRANSPORT**									
24	**OVER 0 TO 8**		**FIXED**							
25		20C	Land	58.89	0.0000	0.4736	0.1791	0.0469	0.0627	0.7623
26		110C	Building	3153.44	6.7854	19.6745	7.4402	2.5086	3.3559	39.7646
27		357CS	Other Digital Equipment	13945.62	127.5064	52.8243	19.9762	11.0941	29.6227	241.0237
28		357C	Other Digital Equipment	1834.77	16.7755	6.9499	2.6282	1.4596	3.8973	31.7105
29			**Total**	**18992.72**	**151.0672**	**79.9224**	**30.2237**	**15.1092**	**36.9386**	**313.2611**
30	**OVER 0 TO 8**		**VARIABLE**							
31		4C	Conduit System	176.38	0.3152	0.9495	0.3591	0.1403	0.1064	1.8705
32		85C	UG Cbl Nonmetallic	78.36	0.4620	0.3693	0.1397	0.0623	0.1234	1.1568
33		845C	Buried Cbl Nonmetallic	1327.24	6.7360	6.3110	2.3866	1.0559	2.5522	19.0416
34			**Total**	**1581.99**	**7.5132**	**7.6298**	**2.8853**	**1.2585**	**2.7820**	**22.0689**
35	**OVER 8 TO 25**		**FIXED**							
36		20C	Land	58.89	0.0000	0.4736	0.1791	0.0469	0.0627	0.7623
37		110C	Building	3153.44	6.7854	19.6745	7.4402	2.5086	3.3559	39.7646
38		357CS	Other Digital Equipment	13945.62	127.5064	52.8243	19.9762	11.0941	29.6227	241.0237
39		357C	Other Digital Equipment	1834.77	16.7755	6.9499	2.6282	1.4596	3.8973	31.7105
40			**Total**	**18992.72**	**151.0672**	**79.9224**	**30.2237**	**15.1092**	**36.9386**	**313.2611**
41	**OVER 8 TO 25**		**VARIABLE**							
42		4C	Conduit System	176.38	0.3152	0.9495	0.3591	0.1403	0.1064	1.8705
43		85C	UG Cbl Nonmetallic	78.36	0.4620	0.3693	0.1397	0.0623	0.1234	1.1568
44		845C	Buried Cbl Nonmetallic	1327.24	6.7360	6.3110	2.3866	1.0559	2.5522	19.0416
45			**Total**	**1581.99**	**7.5132**	**7.6298**	**2.8853**	**1.2585**	**2.7820**	**22.0689**
46	**OVER 25 TO 50**		**FIXED**							
47		20C	Land	58.89	0.0000	0.4736	0.1791	0.0469	0.0627	0.7623
48		110C	Building	3153.44	6.7854	19.6745	7.4402	2.5086	3.3559	39.7646

	A	B	C	D	E	F	G	H	I	J
1	Qwest Default Values 5/30/02 9:43:47 AM						DS3			
2	South Dakota			Investment	Depreciation	Cost of Money	Income Tax	Ad Valorem	Maintenance	Total Capital Costs
3	Acct	FRC	Account Name		cD*(AP p7 cA)/12	cD*(AP p7 cB)/12	cD*(AP p7 cC)/12	cD*(AP p7 cD)/12	cD*(AP p7 cE)/12	sum(cE:cI)
49		357CS	Other Digital Equipment	13945.62	127.5064	52.8243	19.9762	11.0941	29.6227	241.0237
50		357C	Other Digital Equipment	1834.77	16.7755	6.9499	2.6282	1.4596	3.8973	31.7105
51			**Total**	**18992.72**	**151.0672**	**79.9224**	**30.2237**	**15.1092**	**36.9386**	**313.2611**
52	**OVER 25 TO 50**		**VARIABLE**							
53		4C	Conduit System	176.38	0.3152	0.9495	0.3591	0.1403	0.1064	1.8705
54		85C	UG Cbl Nonmetallic	78.36	0.4620	0.3693	0.1397	0.0623	0.1234	1.1568
55		845C	Buried Cbl Nonmetallic	1327.24	6.7360	6.3110	2.3866	1.0559	2.5522	19.0416
56			**Total**	**1581.99**	**7.5132**	**7.6298**	**2.8853**	**1.2585**	**2.7820**	**22.0689**
57	**OVER 50**		**FIXED**							
58		20C	Land	50.37	0.0000	0.4051	0.1532	0.0401	0.0536	0.6519
59		110C	Building	2696.88	5.8030	16.8260	6.3630	2.1454	2.8700	34.0074
60		357CS	Other Digital Equipment	11603.99	106.0966	43.9545	16.6220	9.2313	24.6487	200.5530
61		357C	Other Digital Equipment	1891.69	17.2959	7.1655	2.7097	1.5049	4.0182	32.6943
62			**Total**	**16242.92**	**129.1955**	**68.3511**	**25.8479**	**12.9217**	**31.5905**	**267.9067**
63	**OVER 50**		**VARIABLE**							
64		20C	Land	0.88	0.0000	0.0071	0.0027	0.0007	0.0009	0.0114
65		110C	Building	47.33	0.1018	0.2953	0.1117	0.0376	0.0504	0.5968
66		357CS	Other Digital Equipment	201.24	1.8399	0.7623	0.2883	0.1601	0.4275	3.4780
67		357C	Other Digital Equipment	35.59	0.3254	0.1348	0.0510	0.0283	0.0756	0.6152
68		4C	Conduit System	67.10	0.1199	0.3612	0.1366	0.0534	0.0405	0.7116
69		85C	UG Cbl Nonmetallic	29.81	0.1757	0.1405	0.0531	0.0237	0.0470	0.4401
70		845C	Buried Cbl Nonmetallic	504.92	2.5626	2.4009	0.9079	0.4017	0.9709	7.2440
71			**Total**	**886.87**	**5.1254**	**4.1021**	**1.5513**	**0.7055**	**1.6127**	**13.0970**
72	**Investment Sources**									
73	Land = (AP p12 B10) * (377C + 57C+257C+257CS+357C+357CS)						Building = (AP p12 C10) *(377C+57C+257C+257CS+357C+357CS)			
74	Entrance Facility and Mux = sE p16 cE									
75	Direct Trunk Transport = sE p19 cG									

	A	B	C	D	E	F
1	Qwest Default Values 5/30/02 9:43:47 AM					
2			**DS1**			
3	South Dakota					
4	**Description**	**FRC**	**Default Value**	**Overrides**	**This Run**	**Instructions**
5	**DS1 Entrance Facility Investments**			AP p15		Enter Investments by Account per DS1 entrance facility.
6	CIRCUIT-OTHER DIGITAL	357C	$472.48		$472.48	
7	CIRCUIT-SUB PAIR GAIN-DIGITAL	257C	$1,188.33		$1,188.33	
8	CIRCUIT-SUB PAIR GAIN-DIGITAL	257CP	$482.42		$482.42	
9	CIRCUIT-SUB PAIR GAIN-DIGITAL	257CS	$414.18		$414.18	
10	CIRCUIT-SUB PAIR GAIN-DIGITAL	257CSP	$642.65		$642.65	
11	POLES	1C	$27.80		$27.80	
12	C WIRE	3C	$3.60		$3.60	
13	CONDUIT SYSTEMS	4C	$178.51		$178.51	
14	UNDERGROUND CABLE METALLIC	5C	$55.92		$55.92	
15	BURIED DROP	35C	$116.68		$116.68	
16	AERIAL DROP	42C	$18.48		$18.48	
17	BURIED CABLE METALLIC	45C	$818.37		$818.37	
18	AERIAL CABLE METALLIC	52C	$29.34		$29.34	
19	INTRABUILDING CABLE METALLIC	62C	$19.12		$19.12	
20	UNDERGROUND CABLE NONMETALLIC	85C	$144.24		$144.24	
21	BURIED CABLE NONMETALLIC	845C	$822.92		$822.92	
22	INTRABUILDING CABLE NONMETALLIC	862C	$2.06		$2.06	
23	**MULTIPLEXING DS1 TO DSO**	257C	$11,352.08		$11,352.08	Enter MUX Investments per DS1.
24	All Investments are EFI					
25	**The default values are outputs from the NAC model**					
26	s = section					
27	p = page					
28	c = column					
29	r = row					
30	The spreadsheet shows the Override data entered by the user in ICM's custom input					
31	screens. If the user has input override data, the spreadsheet will determine this and display					
32	the override data in the Overrides column. The this run column will show the Override or					
33	if no override has been entered, the Default value.					
34						
35						

	A	B	C	D	E	F
1	Qwest Default Values 5/30/02 9:43:47 AM					
2			**DS3**			
3	South Dakota					
4	**Description**	**FRC**	**Default Value**	**Overrides**	**This Run**	**Instructions**
5	**DS3 Entrance Facility Investments**			AP p15		Enter Investments by Account per DS3 entrance facility.
6	CIRCUIT-OTHER DIGITAL	357C	$1,798.67		$1,798.67	
7	CIRCUIT-DIGITAL	257C	$166.43		$166.43	
8	CIRCUIT-DIGITAL SONET	257CS	$4,845.65		$4,845.65	
9	CIRCUIT-DIGITAL-PREMISES	257CP	$79.16		$79.16	
10	CIRCUIT-DIGITAL SONET-PREMISES	257CSP	$9,398.15		$9,398.15	
11	POLES	1C	$0.00		$0.00	
12	CONDUIT SYSTEMS	4C	$1,188.68		$1,188.68	
13	UNDERGROUND CABLE METALLIC	5C	$0.00		$0.00	
14	BURIED DROP	35C	$0.00		$0.00	
15	AERIAL DROP	42C	$0.00		$0.00	
16	BURIED CABLE METALLIC	45C	$0.00		$0.00	
17	AERIAL CABLE METALLIC	52C	$0.00		$0.00	
18	INTRABUILDING CABLE METALLIC	62C	$0.00		$0.00	
19	UNDERGROUND CABLE NONMETALLIC	85C	$599.67		$599.67	
20	BURIED CABLE NONMETALLIC	845C	$5,283.54		$5,283.54	
21	INTRABUILDING CABLE NONMETALLIC	862C	$24.71		$24.71	
22	**MULTIPLEXING DS3 TO DS1**	257C	$12,923.28		$12,923.28	Enter MUX Investments per DS3.
23						
24	**The default values are outputs from the NAC model**					
25	s = section					
26	p = page					
27	c = column					
28	r = row					
29	The spreadsheet shows the Override data entered by the user in ICM's custom input screens.					
30	If the user has input override data, the spreadsheet will determine this and display the					
31	override data in the Overrides column. The this run column will show the Override or if no					
32	override has been entered, the Default value.					
33						

Qwest Default Values 5/30/02 9:43:47 AM

South Dakota

Mileage Band	Fixed or DISTANCE SENSITIVE	FRC	TOTAL DIRECT	NETWORK SUPPORT	Total Investment
Over 0 to 8	Fixed	357CS	1311.79	0.00	1311.79
Over 0 to 8	Fixed	357C	1440.49	17.70	1458.19
Over 0 to 8	Variable	357CS	9.21	0.00	9.21
Over 0 to 8	Variable	357C	2.12	0.03	2.15
Over 0 to 8	Variable	4C	10.20	6.40	16.61
Over 0 to 8	Variable	85C	4.53	2.84	7.38
Over 0 to 8	Variable	845C	73.64	46.21	119.85
Over 8 to 25	Fixed	357CS	1311.79	0.00	1311.79
Over 8 to 25	Fixed	357C	1440.49	17.70	1458.19
Over 8 to 25	Variable	357CS	9.21	0.00	9.21
Over 8 to 25	Variable	357C	2.12	0.03	2.15
Over 8 to 25	Variable	4C	10.20	6.40	16.61
Over 8 to 25	Variable	85C	4.53	2.84	7.38
Over 8 to 25	Variable	845C	73.64	46.21	119.85
Over 25 to 50	Fixed	357CS	1311.79	0.00	1311.79
Over 25 to 50	Fixed	357C	1440.49	17.70	1458.19
Over 25 to 50	Variable	357CS	9.21	0.00	9.21
Over 25 to 50	Variable	357C	2.12	0.03	2.15
Over 25 to 50	Variable	4C	10.20	6.40	16.61
Over 25 to 50	Variable	85C	4.53	2.84	7.38
Over 25 to 50	Variable	845C	73.64	46.21	119.85
Over 50	Fixed	357CS	1008.42	0.00	1008.42
Over 50	Fixed	357C	1451.58	6.82	1458.40
Over 50	Variable	357CS	21.80	0.00	21.80
Over 50	Variable	357C	3.94	0.07	4.01
Over 50	Variable	4C	4.92	3.09	8.00
Over 50	Variable	85C	2.18	1.37	3.56
Over 50	Variable	845C	37.01	23.22	60.23
All	Fixed	357CS	1091.00	0.00	1091.00
All	Fixed	357C	1448.56	9.78	1458.34
All	Variable	357CS	21.19	0.00	21.19
All	Variable	357C	3.47	0.07	3.54
All	Variable	4C	5.03	3.15	8.18
All	Variable	85C	2.23	1.40	3.64
All	Variable	845C	37.76	23.70	61.46

Qwest Default Values 5/30/02 9:43:47 AM — South Dakota

Mileage Band	Fixed or DISTANCE SENSITIVE	FRC	TOTAL DIRECT	NETWORK SUPPORT	Total Investment
Over 0 to 8	Fixed	357CS	13945.62	0.00	13945.62
Over 0 to 8	Fixed	357C	1669.71	165.06	1834.77
Over 0 to 8	Variable	4C	108.37	68.01	176.38
Over 0 to 8	Variable	85C	48.15	30.22	78.36
Over 0 to 8	Variable	845C	815.47	511.78	1327.24
Over 8 to 25	Fixed	357CS	13945.62	0.00	13945.62
Over 8 to 25	Fixed	357C	1669.71	165.06	1834.77
Over 8 to 25	Variable	4C	108.37	68.01	176.38
Over 8 to 25	Variable	85C	48.15	30.22	78.36
Over 8 to 25	Variable	845C	815.47	511.78	1327.24
Over 25 to 50	Fixed	357CS	13945.62	0.00	13945.62
Over 25 to 50	Fixed	357C	1669.71	165.06	1834.77
Over 25 to 50	Variable	4C	108.37	68.01	176.38
Over 25 to 50	Variable	85C	48.15	30.22	78.36
Over 25 to 50	Variable	845C	815.47	511.78	1327.24
Over 50	Fixed	357CS	11603.99	0.00	11603.99
Over 50	Fixed	357C	1833.99	57.70	1891.69
Over 50	Variable	357CS	201.24	0.00	201.24
Over 50	Variable	357C	34.96	0.63	35.59
Over 50	Variable	4C	41.23	25.87	67.10
Over 50	Variable	85C	18.32	11.50	29.81
Over 50	Variable	845C	310.23	194.70	504.92
All	Fixed	357CS	12273.02	0.00	12273.02
All	Fixed	357C	1787.05	88.38	1875.43
All	Variable	357CS	173.76	0.00	173.76
All	Variable	357C	25.16	0.57	25.73
All	Variable	4C	41.68	26.16	67.84
All	Variable	85C	18.52	11.62	30.14
All	Variable	845C	313.66	196.85	510.50

Section G - 8XX Database Services
8XX - Develop Total Prod Costs

Row	Qwest Default Values 5/30/02 9:43:47 AM South Dakota	Source or Calculation	Factor Value [AP p1 cB]	Basic Query	Call Handling and Destination	POTS Translation
			A	B	C	D
1	**Investment**	sG p2 cD Total		0.00178522	0.00000706	0.00000235
2						
3	Investment Based Costs (IBC)	sG p2 cJ Total		0.00033519	0.00000130	0.00000043
4	Element Specific Expenses	AP p10 F52		0.01443876		
5	***Total IBC + Element Specific Expenses***	*r3 + r4*		**0.0147740**	**0.0000013**	**0.0000004**
6						
7	***Marketing & Business Fees***					
8	Product Management Expense	cA*r5	0.01996	0.0002948	0.0000000	0.0000000
9	Sales Expense	cA*r5	0.01188	0.0001755	0.0000000	0.0000000
10	Product Advertising Expense	cA*r5	0.00000	0.0000000	0.0000000	0.0000000
11	Business Fees (Other Operating Taxes)	cA*(r5+r8:r10)	0.00148	0.0000226	0.0000000	0.0000000
12	***Marketing & Business Fees Total***	*Sum r8:r11*		0.0004929	0.0000000	0.0000000
13						
14	***Sub-Total Expenses***	*r5 + r12*		0.0152669	0.0000013	0.0000004
15						
16	***Other Direct Expenses***					
17	Network Operations	cA*r14	0.03483	0.0005318	0.0000000	0.0000000
18	Network Support Assets	cA*r14	0.01470	0.0002245	0.0000000	0.0000000
19	General Support Assets	cA*r14	0.08874	0.0013548	0.0000001	0.0000000
20	General Purpose Computers	cA*r14	0.04334	0.0006617	0.0000001	0.0000000
21	Uncollectible - Interconnect	cA*r14	0.00379	0.0000578	0.0000000	0.0000000
22	Accounting and Finance Expense	cA*r14	0.00735	0.0001121	0.0000000	0.0000000
23	Human Resources Expense	cA*r14	0.00829	0.0001266	0.0000000	0.0000000
24	Information Management Expense	cA*r14	0.07089	0.0010822	0.0000001	0.0000000
25	Intangibles	cA*r14	0.00000	0.0000000	0.0000000	0.0000000
26	***Total Other Direct Expenses***	*Sum r17:r25*		0.0041516	0.0000004	0.0000001
27						
28	***Total Element Long Run Incremental Costs***	*r 14 + r26*		**0.0194184**	**0.0000017**	**0.0000006**
29						
30	***Common***					
31	Executive Expense	cA*r28	0.01127	0.0002188	0.0000000	0.0000000
32	Planning Expense	cA*r28	0.00053	0.0000102	0.0000000	0.0000000
33	External Relations Expense	cA*r28	0.03785	0.0007349	0.0000001	0.0000000
34	Legal Expense	cA*r28	0.00472	0.0000916	0.0000000	0.0000000
35	Other Procurement Expense	cA*r28	0.00186	0.0000361	0.0000000	0.0000000
36	Research and Development Expense	cA*r28	0.00001	0.0000001	0.0000000	0.0000000
37	Other General and Admin Exp	cA*r28	0.01506	0.0002925	0.0000000	0.0000000
38	***Total Common Costs***	*Sum r31:r37*		**0.0013843**	**0.0000001**	**0.0000000**
39						
40	***TELRIC + Common***	*r27 + r38*		**0.0208027**	**0.00000183**	**0.00000061**

Section G - 8XX Database Services
8XX-Investment Cost Calculation

	A	B	C	D	E	F	G	H	I	J
1	Qwest Default Values 5/30/02 9:43:47 AM						8XX Database			
2	South Dakota			Investment	Depreciation	Cost of Money	Income Tax	Ad Valorem	Maintenance	Total Capital Costs
3	Acct	FRC	Account Name		cD*(AP p7 cA)	cD*(AP p7 cB)	cD*(AP p7 cC)	cD*(AP p7 cD)	cD*(AP p7 cE)	sum(cE:cI)
4	Basic Query									
5	2111	20C	Land	0.000005176	0.0000000	0.0000005	0.0000002	0.0000000	0.0000001	0.000000804
6	2121	110C	Building	0.000277141	0.0000072	0.0000207	0.0000078	0.0000026	0.0000035	0.000041937
7	2212	377C	Digital Switch	0.001355269	0.0001476	0.0000616	0.0000233	0.0000129	0.0000136	0.000258998
8	2232.5	57C	Other Analog Equipment	0.000016873	0.0000027	0.0000008	0.0000003	0.0000002	0.0000002	0.000004163
9	2232.3	357C	Other Digital Equipment	0.000010278	0.0000011	0.0000005	0.0000002	0.0000001	0.0000003	0.000002132
10	2232.3	357CS	Other Digital Equipment	0.000004445	0.0000005	0.0000002	0.0000001	0.0000000	0.0000001	0.000000922
11	2422.12,.22	85C	UG Cbl Nonmetallic	0.000002748	0.0000002	0.0000002	0.0000001	0.0000000	0.0000001	0.000000487
12	2423.12,.22	845C	Buried Cbl Nonmetallic	0.000013777	0.0000008	0.0000008	0.0000003	0.0000001	0.0000003	0.000002372
13	2124	361C	General Purpose Comp.	0.000095000	0.0000157	0.0000045	0.0000017	0.0000009	0.0000000	0.000022802
14	2441	4C	Conduit System	0.000004517	0.0000001	0.0000003	0.0000001	0.0000000	0.0000000	0.000000575
15			**Total**	**0.001785225**	**0.0001759**	**0.0000900**	**0.0000340**	**0.0000170**	**0.0000182**	**0.000335191**
16	Call Handling and Destination									
17	2111	20C	Land	0.000000022	0.0000000	0.0000000	0.0000000	0.0000000	0.0000000	0.000000003
18	2121	110C	Building	0.000001172	0.0000000	0.0000001	0.0000000	0.0000000	0.0000000	0.000000177
19	2212	377C	Digital Switch	0.000005863	0.0000006	0.0000003	0.0000001	0.0000001	0.0000001	0.000001120
20	2124	361C	General Purpose Comp.	0.000000000	0.0000000	0.0000000	0.0000000	0.0000000	0.0000000	0.000000000
21			**Total**	**0.000007057**	**0.0000007**	**0.0000004**	**0.0000001**	**0.0000001**	**0.0000001**	**0.000001301**
22	POTS Translation									
23	2111	20C	Land	0.000000007	0.0000000	0.0000000	0.0000000	0.0000000	0.0000000	0.000000001
24	2121	110C	Building	0.000000391	0.0000000	0.0000000	0.0000000	0.0000000	0.0000000	0.000000059
25	2212	377C	Digital Switch	0.000001954	0.0000002	0.0000001	0.0000000	0.0000000	0.0000000	0.000000373
26	2124	361C	General Purpose Comp.	0.000000000	0.0000000	0.0000000	0.0000000	0.0000000	0.0000000	0.000000000
27			**Total**	**0.000002352**	**0.0000002**	**0.0000001**	**0.0000000**	**0.0000000**	**0.0000000**	**0.000000434**
28	**Basic Query Investment Sources**									
29	Land = (AP p12 B10) * (377C + 57C+257C+257CS+357C+357CS)					Building = (AP p12 C10) *(377C+57C+257C+257CS+357C+357CS)				
30	All others = sG p3 sum of column F by account									
31										
32	s = section									
33	p = page									
34	c = column									
35	r = row									
36	Upper Case letter with number indicates a cell location, i.e. G40									

	A	B	C	D	E	F
1	**Basic 800 Services Query (& Response) Investments and Expenses**					
2						
3				**2000 Investment & Expenses**	**Loading Factor**	**Loaded Investment**
4			Source:	8XX Services Model v2.2	Ap p13 cE	cD Investments * cE
5	LSTP Hardware/Query (& Response)					
6	377C			0.00048943	1.2626	0.00061796
7						
8	LSTP Software/Query (& Response)					
9	377C			0.00000771	1.2626	0.00000974
10						
11	InterSTP Data Link Hardware/Query (& Response)					
12	377C			0.00000617	1.2626	0.00000779
13	57C			0.00000994	1.2626	0.00001255
14	357C			0.00000419	1.0000	0.00000419
15	357CS			0.00000187	1.0000	0.00000187
16	845C			0.00001105	1.0000	0.00001105
17	85C			0.00000141	1.0000	0.00000141
18	4C			0.00000223	1.0000	0.00000223
19						
20	InterSTP Data Link Software/Query (& Response)					
21	377C			0.00011803	1.2626	0.00014902
22						
23	RSTP Hardware/Query (& Response)					
24	377C			0.00009478	1.2626	0.00011967
25						
26	RSTP Software/Query (& Response)					
27	377C			0.00001107	1.2626	0.00001398
28						
29	Data Link & MRS SCP Hardware/Query (& Response)					
30	377C	(RSTP Hardware)		0.00000213	1.2626	0.00000268
31	57C			0.00000343	1.2626	0.00000433
32	357C			0.00000529	1.0000	0.00000529
33	357CS			0.00000258	1.0000	0.00000258
34	845C			0.00000273	1.0000	0.00000273
35	85C			0.00000134	1.0000	0.00000134
36	4C			0.00000229	1.0000	0.00000229
37						
38	RSTP - SCP Data Link Software/Query (& Response)					
39	377C			0.00004069	1.2626	0.00005137
40						
41	SCP Hardware					
42	377C			0.00032454	1.1803	0.00038306
43						
44	Annual Software Expense			Levelized annual expense/queries		
45	Expense			0.00025476		
46						
47	Billing & Collections			See Billing Tab		
48	361C					0.000095
49	Expense			0.01418400		
50						
51	Data Link Investments					
52		RSTP - SCP Data Link EFI	X.25 Data Links EFI	Total EFI		
53		2000	20000	22000	1.2626	27777.23
54					Queries	
55	357C	Investment per query calculation			##########	0.00000081
56						
57						
58	**Call Handling and Destination Feature Increment per Query**					
59	SCP Hardware/Query (& Response)					
60	377C			0.00000497	1.1803	0.00000586
61						
62	LIDB SCP Software/Query (& Response)					
63	361C	(2681.4)		0.00000000	1.0000	0.00000000
64						
65	**POTS Translation Feature Increment per Query**					

	A	B	C	D	E	F
1	**Basic 800 Services Query (& Response) Investments and Expenses**					
2						
3				**2000 Investment & Expenses**	**Loading Factor**	**Loaded Investment**
4			Source:	8XX Services Model v2.2	Ap p13 cE	cD Investments * cE
66	SCP Hardware/Query (& Response)					
67	377C			0.00000166	1.1803	0.00000195
68						
69	SCP Software/Query (& Response)					
70	361C	(2681.4)		0.00000000	1.0000	0.00000000
71						
72						
73	*Account 2124 translated from account 2681.4					
74						
75	NOTE : All investments in this model are Engineered, Furnished and Installed (EF&I).					

Section H - Line I[illegible]mation Database
LIDB - Develop[illegible]otal Prod Costs

Row	Qwest Default Values 5/30/02 9:43:47 AM South Dakota	Source or Calculation	Factor Value [AP p1 cB]	LIDB LIDB per Query
			A	B
1	**Investment**	sH p2 D16		0.001947519
2				
3	Investment Based Costs (IBC)	sH p2 J16		0.000360304
4	Element Specific Expenses	sH p4 D74+D78		0.000291954
5	***Total IBC + Element Specific Expenses***	*r3 + r4*		**0.0006523**
6				
7	***Marketing & Business Fees***			
8	Product Management Expense	cA*r5	0.01996	0.0000130
9	Sales Expense	cA*r5	0.01188	0.0000077
10	Product Advertising Expense	cA*r5	0.00000	0.0000000
11	Business Fees (Other Operating Taxes)	cA*(r5+r8:r10)	0.00148	0.0000010
12	***Marketing & Business Fees Total***	*Sum r8:r11*		0.0000218
13				
14	***Sub-Total Expenses***	*r5 + r12*		0.0006740
15				
16	***Other Direct Expenses***			
17	Network Operations	cA*r14	0.03483	0.0000235
18	Network Support Assets	cA*r14	0.01470	0.0000099
19	General Support Assets	cA*r14	0.08874	0.0000598
20	General Purpose Computers	cA*r14	0.04334	0.0000292
21	Uncollectible - Interconnect	cA*r14	0.00379	0.0000026
22	Accounting and Finance Expense	cA*r14	0.00735	0.0000050
23	Human Resources Expense	cA*r14	0.00829	0.0000056
24	Information Management Expense	cA*r14	0.07089	0.0000478
25	Intangibles	cA*r14	0.00000	0.0000000
26	***Total Other Direct Expenses***	*Sum r17:r25*		0.0001833
27				
28	***Total Element Long Run Incremental Costs***	*r 14 + r26*		**0.0008573**
29				
30	***Common***			
31	Executive Expense	cA*r28	0.01127	0.0000097
32	Planning Expense	cA*r28	0.00053	0.0000005
33	External Relations Expense	cA*r28	0.03785	0.0000324
34	Legal Expense	cA*r28	0.00472	0.0000040
35	Other Procurement Expense	cA*r28	0.00186	0.0000016
36	Research and Development Expense	cA*r28	0.00001	0.0000000
37	Other General and Admin Exp	cA*r28	0.01506	0.0000129
38	***Total Common Costs***	*Sum r31:r37*		**0.0000611**
39				
40	***TELRIC + Common***	*r27 + r38*		**0.0009**

c = column, r = row, s = section, p = page, AP = Appendix

Section H - Line I[illegible]nation Database
LIDB - Investment Cost Calc

	A	B	C	D	E	F	G	H	I	J
1	Qwest Default Values					LIDB per Query				
2	South Dakota			Investment	Depreciation	Cost of Money	Income Tax	Ad Valorem	Maintenance	Total Capital Costs
3	Acct	FRC	Account Name		cD*(AP p7 cA)	cD*(AP p7 cB)	cD*(AP p7 cC)	cD*(AP p7 cD)	cD*(AP p7 cE)	sum(cE:cI)
4	LIDB per Query			sum(sH p3-4 cF) by FRC						
5										
6	2111	20C	Land	0.000005938	0.0000000	0.0000006	0.0000002	0.0000001	0.0000001	0.000000922
7	2121	110C	Building	0.000317973	0.0000082	0.0000238	0.0000090	0.0000030	0.0000041	0.000048115
8	2212	377C	Digital Switch	0.001531361	0.0001668	0.0000696	0.0000263	0.0000146	0.0000153	0.000292650
9	2232.5	57C	Other Analog Equipment	0.000024956	0.0000040	0.0000011	0.0000004	0.0000002	0.0000003	0.000006157
10	2232.3	357C	Other Digital Equipment	0.000025993	0.0000029	0.0000012	0.0000004	0.0000002	0.0000007	0.000005391
11	2124	361C	General Purpose Comp.	0.000000000	0.0000000	0.0000000	0.0000000	0.0000000	0.0000000	0.000000000
12	2232.3	357CS	Other Digital Equipment	0.000008885	0.0000010	0.0000004	0.0000002	0.0000001	0.0000002	0.000001843
13	2422.12,.22	85C	UG Cbl Nonmetallic	0.000005076	0.0000004	0.0000003	0.0000001	0.0000000	0.0000001	0.000000899
14	2423.12,.22	845C	Buried Cbl Nonmetallic	0.000018867	0.0000011	0.0000011	0.0000004	0.0000002	0.0000004	0.000003248
15	2441	4C	Conduit System	0.000008470	0.0000002	0.0000005	0.0000002	0.0000001	0.0000001	0.000001078
16			**Total**	**0.001948**	**0.000185**	**0.000099**	**0.000037**	**0.000019**	**0.000021**	**0.000360**
17										
18	**Investment Sources**									
19	Land = (AP p12 B10) * (377C + 57C+257C+257CS+357C+357CS)					Building = (AP p12 C10) *(377C+57C+257C+257CS+357C+357CS)				

	A	B	C	D	E	F
1						
2	**LIDB Query Service per Query (& Response) Investments and Expenses**					
3						
4				**2000 Investment & Expenses**	**Loading Factor**	**Loaded Investment**
5			Source:	LIDB Services Model v3.52	Ap p13 cE	cD Investments * cE
6	LSTP Hardware/Query (& Response)					
7	377C			0.00011210	1.2626	0.00014154
8						
9	LSTP Software/Query (& Response)					
10	377C			0.00000177	1.2626	0.00000223
11						
12	InterSTP Data Link Hardware/Query (& Response)					
13	377C			0.00000644	1.2626	0.00000813
14	57C			0.00001038	1.2626	0.00001311
15	357C			0.00000437	1	0.00000437
16	357CS			0.00000195	1	0.00000195
17	845C			0.00001154	1	0.00001154
18	85C			0.00000147	1	0.00000147
19	4C			0.00000233	1	0.00000233
20						
21	InterSTP Data Link Software/Query (& Response)					
22	377C			0.00012329	1.2626	0.00015566
23						
24	RSTP Hardware/Query (& Response)					
25	377C			0.00009082	1.2626	0.00011467
26						
27	RSTP Software/Query (& Response)					
28	377C			0.00001061	1.2626	0.00001339
29						
30	Data Link & MRS SCP Hardware/Query (& Response)					
31	377C		(RSTP Hardware)	0.00000289	1.2626	0.00000364
32	57C			0.00000465	1.2626	0.00000587
33	357C			0.00000717	1	0.00000717
34	357CS			0.00000344	1	0.00000344
35	845C			0.00000363	1	0.00000363
36	85C			0.00000179	1	0.00000179
37	4C			0.00000304	1	0.00000304
38	377C		(SCP Hardware)	0.00030306	1.1803	0.00035772
39				SCP Includes Power		
40	RSTP - MRS SCP Data Link Software/Query (& Response)					
41	377C			0.00005524	1.2626	0.00006975
42						
43	MRS SCP Software/Query (& Response)					
44	361C			0.00000000	1.0000	0.00000000
45						
46						

Section H - Line Information Database
LIDB - Inv & Exp Inputs

	A	B	C	D	E	F
1						
2	**LIDB Query Service per Query (& Response) Investments and Expenses**					
3						
4				**2000 Investment & Expenses**	**Loading Factor**	**Loaded Investment**
5			Source:	LIDB Services Model v3.52	Ap p13 cE	cD Investments * cE
47	RSTP Hardware/Query (& Response)					
48	377C			0.00008829	1.2626	0.00011148
49						
50	RSTP Software/Query (& Response)					
51	377C			0.00001031	1.2626	0.00001302
52						
53	Data Link & LIDB SCP Hardware/Query (& Response)					
54	377C	(RSTP Hardware)		0.00000294	1.2626	0.00000371
55	57C			0.00000473	1.2626	0.00000598
56	357C			0.00000730	1	0.00000730
57	357CS			0.00000350	1	0.00000350
58	845C			0.00000369	1	0.00000369
59	85C			0.00000182	1	0.00000182
60	4C			0.00000310	1	0.00000310
61	377C	(SCP Hardware)		0.00039433	1.1803	0.00046544
62				SCP Includes Power		
63	RSTP - LIDB SCP Data Link Software/Query (& Response)					
64	377C			0.00005621	1.2626	0.00007097
65						
66	LIDB SCP Software/Query (& Response)					
67	361C			0.00000000	1	0.00000000
68						
69	*Account 2124 translated from account 2681.4					
70						
71	LQS Additional Inv/Exp Summary: Maintenance/Query & Response					
72	377C			0.00000000	1.2626	0.00000000
73	LQS Additional Inv/Exp Summary: Admin. & Software Support/Query & Response					
74	377M	Expense		0.00029194		
75	LQS Additional Inv/Exp Summary: Data Link Installation/Query & Response					
76	357C			0.00000716	1	0.00000716
77	LQS Additional Inv/Exp Summary: Data Link Maintenance/Query & Response					
78	357M	Expense		0.00000002		

Section I - Signaling
Signal-Develop Total Prod Costs

Qwest Default Values 5/30/02 9:43:47 AM

Qwe South Dakota

Row		Source or Calculation	Factor Value [AP p1 cB]	ISUP Signal Formulation	ISUP Signal Transport	TCAP Signal Transport	ISUP Signal Switching	TCAP Signal Switching	STP Port
			A	E	F	C	G	D	I
				Signaling					
1	**Investment**	sl p2-3 cD		0.0025891	0.0008104	0.0000910	0.0029663	0.0022450	12738.3344
2									
3	Investment Based Costs (IBC)	sl p2-3 cJ		0.0004774	0.0001535	0.0000170	0.0006190	0.0004860	195.7330
4	Element Specific Expenses	sl p4 cB		0.0000000	0.0000000	0.0000000	0.0001476	0.0001476	
5	***Total IBC + Element Specific Expenses***	*r3 + r4*		0.0004774	0.0001535	0.0000170	0.0007666	0.0006336	195.7330
6									
7	***Marketing & Business Fees***								
8	Product Management Expense	cA*r5	0.01996	0.0000095	0.0000031	0.0000003	0.0000153	0.0000126	3.9063
9	Sales Expense	cA*r5	0.01188	0.0000057	0.0000018	0.0000002	0.0000091	0.0000075	2.3248
10	Product Advertising Expense	cA*r5	0.00000	0.0000000	0.0000000	0.0000000	0.0000000	0.0000000	0.0000
11	Business Fees (Other Operating Taxes)	cA*(r5+r8:r10)	0.00148	0.0000007	0.0000002	0.0000000	0.0000012	0.0000010	0.2995
12	***Marketing & Business Fees Total***	*Sum r8:r11*		0.0000159	0.0000051	0.0000006	0.0000256	0.0000211	6.5306
13									
14	***Sub-Total Expenses***	*r5 + r12*		0.0004933	0.0001586	0.0000176	0.0007922	0.0006547	202.2636
15									
16	***Other Direct Expenses***								
17	Network Operations	cA*r14	0.03483	0.0000172	0.0000055	0.0000006	0.0000276	0.0000228	7.0452
18	Network Support Assets	cA*r14	0.01470	0.0000073	0.0000023	0.0000003	0.0000116	0.0000096	2.9740
19	General Support Assets	cA*r14	0.08874	0.0000438	0.0000141	0.0000016	0.0000703	0.0000581	17.9493
20	General Purpose Computers	cA*r14	0.04334	0.0000214	0.0000069	0.0000008	0.0000343	0.0000284	8.7665
21	Uncollectible - Interconnect	cA*r14	0.00379	0.0000019	0.0000006	0.0000001	0.0000030	0.0000025	0.7658
22	Accounting and Finance Expense	cA*r14	0.00735	0.0000036	0.0000012	0.0000001	0.0000058	0.0000048	1.4858
23	Human Resources Expense	cA*r14	0.00829	0.0000041	0.0000013	0.0000001	0.0000066	0.0000054	1.6775
24	Information Management Expense	cA*r14	0.07089	0.0000350	0.0000112	0.0000012	0.0000562	0.0000464	14.3378
25	Intangibles	cA*r14	0.00000	0.0000000	0.0000000	0.0000000	0.0000000	0.0000000	0.0000
26	***Total Other Direct Expenses***	*Sum r17:r25*		0.0001341	0.0000431	0.0000048	0.0002154	0.0001780	55.0019
27									
28	***Total Element Long Run Incremental Costs***	*r 14 + r26*		**0.0006275**	**0.0002018**	**0.0000223**	**0.0010076**	**0.0008328**	**257.27**
29									
30	***Common***								
31	Executive Expense	cA*r28	0.01127	0.0000071	0.0000023	0.0000003	0.0000114	0.0000094	2.8987
32	Planning Expense	cA*r28	0.00053	0.0000003	0.0000001	0.0000000	0.0000005	0.0000004	0.1352
33	External Relations Expense	cA*r28	0.03785	0.0000237	0.0000076	0.0000008	0.0000381	0.0000315	9.7365
34	Legal Expense	cA*r28	0.00472	0.0000030	0.0000010	0.0000001	0.0000048	0.0000039	1.2136
35	Other Procurement Expense	cA*r28	0.00186	0.0000012	0.0000004	0.0000000	0.0000019	0.0000015	0.4784
36	Research and Development Expense	cA*r28	0.00001	0.0000000	0.0000000	0.0000000	0.0000000	0.0000000	0.0015
37	Other General and Admin Exp	cA*r28	0.01506	0.0000095	0.0000030	0.0000003	0.0000152	0.0000125	3.8754
38	***Total Common Costs***	*Sum r31:r37*		**0.0000447**	**0.0000144**	**0.0000016**	**0.0000718**	**0.0000594**	**18.3393**
39									
40	***TELRIC + Common***	*r27 + r38*		**0.0006722**	**0.0002161**	**0.0000239**	**0.0010794**	**0.0008921**	**275.60**

c = column, r = row, s = section, p = page, AP = Appendix

Section I Signaling
Signal - Investment Cost Calc

	A	B	C	D	E	F	G	H	I	J
1						Signaling				
2	Qwest Default Values 5/30/02 9:43:47 AM			Investment	Depreciation	Cost of Money	Income Tax	Ad Valorem	Maintenance	Total Capital Costs
3	Acct	FRC	Account Name		cD*(AP p7 cA)	cD*(AP p7 cB)	cD*(AP p7 cC)	cD*(AP p7 cD)	cD*(AP p7 cE)	sum(cE:cI)
4	**ISUP Signal Formulation**			sl p4 D26-27						
5	2111	20C	Land	0.00000803	0.00000000	0.00000077	0.00000029	0.00000008	0.00000010	0.00000125
6	2121	110C	Building	0.00042987	0.00001110	0.00003218	0.00001217	0.00000410	0.00000549	0.00006505
7	2212	377C	Digital Switch	0.00215116	0.00023428	0.00009776	0.00003697	0.00002054	0.00002155	0.00041110
8	2124	361C	General Purpose Comp.	0.00000000	0.00000000	0.00000000	0.00000000	0.00000000	0.00000000	0.00000000
9			**Total**	**0.00258906**	**0.00024538**	**0.00013072**	**0.00004943**	**0.00002472**	**0.00002714**	**0.00047739**
10	**ISUP Signal Transport**			sl p4 D31-38						
11	2111	20C	Land	0.00000249	0.00000000	0.00000024	0.00000009	0.00000002	0.00000003	0.00000039
12	2121	110C	Building	0.00013342	0.00000345	0.00000999	0.00000378	0.00000127	0.00000170	0.00002019
13	2212	377C	Digital Switch	0.00058166	0.00006335	0.00002643	0.00001000	0.00000555	0.00000583	0.00011116
14	2232.5	57C	Other Analog Equipment	0.00007087	0.00001141	0.00000320	0.00000121	0.00000068	0.00000099	0.00001749
15	2232.3	357C	Other Digital Equipment	0.00001387	0.00000152	0.00000063	0.00000024	0.00000013	0.00000035	0.00000288
16	2232.3	357CS	Other Digital Equipment	0.00000127	0.00000014	0.00000006	0.00000002	0.00000001	0.00000003	0.00000026
17	2423.12,.22	845C	Buried Cbl Nonmetallic	0.00000515	0.00000031	0.00000029	0.00000011	0.00000005	0.00000012	0.00000089
18	2422.12,.22	85C	UG Cbl Nonmetallic	0.00000065	0.00000005	0.00000004	0.00000001	0.00000001	0.00000001	0.00000012
19	2441	4C	Conduit System	0.00000104	0.00000002	0.00000007	0.00000003	0.00000001	0.00000001	0.00000013
20	2124	361C	General Purpose Comp.	0.00000000	0.00000000	0.00000000	0.00000000	0.00000000	0.00000000	0.00000000
21			**Total**	**0.00081044**	**0.00008024**	**0.00004095**	**0.00001549**	**0.00000774**	**0.00000908**	**0.00015350**
22	**TCAP Signal Transport**			sl p4 D9-17						
23	2111	20C	Land	0.00000026	0.00000000	0.00000003	0.00000001	0.00000000	0.00000000	0.00000004
24	2121	110C	Building	0.00001413	0.00000036	0.00000106	0.00000040	0.00000013	0.00000018	0.00000214
25	2212	377C	Digital Switch	0.00006320	0.00000688	0.00000287	0.00000109	0.00000060	0.00000063	0.00001208
26	2232.5	57C	Other Analog Equipment	0.00000506	0.00000081	0.00000023	0.00000009	0.00000005	0.00000007	0.00000125
27	2232.3	357C	Other Digital Equipment	0.00000169	0.00000019	0.00000008	0.00000003	0.00000002	0.00000004	0.00000035
28	2232.3	357CS	Other Digital Equipment	0.00000075	0.00000008	0.00000003	0.00000001	0.00000001	0.00000002	0.00000016
29	2423.12,.22	845C	Buried Cbl Nonmetallic	0.00000445	0.00000027	0.00000025	0.00000010	0.00000004	0.00000010	0.00000077
30	2422.12,.22	85C	UG Cbl Nonmetallic	0.00000057	0.00000004	0.00000003	0.00000001	0.00000001	0.00000001	0.00000010
31	2441	4C	Conduit System	0.00000090	0.00000002	0.00000006	0.00000002	0.00000001	0.00000001	0.00000011
32	2124	361C	General Purpose Comp.	0.00000000	0.00000000	0.00000000	0.00000000	0.00000000	0.00000000	0.00000000
33			**Total**	**0.00009100**	**0.00000866**	**0.00000464**	**0.00000175**	**0.00000087**	**0.00000107**	**0.00001699**
34	**ISUP Signal Switching**			sl p4 D42-43						
35	2111	20C	Land	0.00000518	0.00000000	0.00000050	0.00000019	0.00000005	0.00000007	0.00000081
36	2121	110C	Building	0.00027761	0.00000717	0.00002078	0.00000786	0.00000265	0.00000355	0.00004201
37	2212	377C	Digital Switch	0.00138919	0.00015130	0.00006313	0.00002387	0.00001326	0.00001392	0.00026548
38	2124	361C	General Purpose Comp.	0.00129436	0.00021338	0.00006164	0.00002331	0.00001236	0.00000000	0.00031068
39			**Total**	**0.00296634**	**0.00037184**	**0.00014605**	**0.00005523**	**0.00002832**	**0.00001753**	**0.00061897**
40	**TCAP Signal Switching**			sl p4 D21-22						
41	2111	20C	Land	0.00000295	0.00000000	0.00000028	0.00000011	0.00000003	0.00000004	0.00000046
42	2121	110C	Building	0.00015784	0.00000408	0.00001182	0.00000447	0.00000151	0.00000202	0.00002388
43	2212	377C	Digital Switch	0.00078988	0.00008603	0.00003590	0.00001357	0.00000754	0.00000791	0.00015095
44	2124	361C	General Purpose Comp.	0.00129436	0.00021338	0.00006164	0.00002331	0.00001236	0.00000000	0.00031068
45			**Total**	**0.00224504**	**0.00030348**	**0.00010964**	**0.00004146**	**0.00002143**	**0.00000997**	**0.00048597**

Section I - Signaling
Signal - Investment Cost Calc

	A	B	C	D	E	F	G	H	I	J
1						Signaling				
2	Qwest Default Values 5/30/02 9:43:47 AM			Investment	Depreciation	Cost of Money	Income Tax	Ad Valorem	Maintenance	Total Capital Costs
3	Acct	FRC	Account Name		cD*(AP p7 cA)	cD*(AP p7 cB)	cD*(AP p7 cC)	cD*(AP p7 cD)	cD*(AP p7 cE)	sum(cE:cI)
46	STP per Port			sl p5 G10						
47	2111	20C	Land	39.4988	0.00000	0.31766	0.12013	0.03142	0.04203	0.51124084
48	2121	110C	Building	2114.9969	4.55092	13.19564	4.99011	1.68254	2.25077	26.66997214
49	2212	377C	Digital Switch	10583.8387	96.05740	40.08168	15.15744	8.41974	8.83553	168.55178566
50			**Total**	**12738.33442**	**100.60832**	**53.59498**	**20.26767**	**10.13370**	**11.12833**	**195.73300**
51	**Investment Sources**									
52	Land = (AP p12 B10) * (377C + 57C+257C+257CS+357C+357CS)					Building = (AP p12 C10) *(377C+57C+257C+257CS+357C+357CS)				
53										
54	See Investment column for source of other investments									

Section I - Signaling
Signaling - Inv & Exp Inputs

	A	B	C	D	E	F
1	Qwest Default Values 5/30/02 9:43:47 AM					
2		**SS7 SERVICE - PER SIGNALLED MESSAGE**				
3						
4		**SUMMARY OF INVESTMENTS AND EXPENSES**				
5	South Dakota					
6	**Acct Code**	**Investment & Expenses Before Loadings**	**Loading Factor**	**Loaded Investment**		
7		**A**	**B**	**C**		
8	Source		Ap p13 cE	A Investments * B		
9	**ISUP SIGNAL FORMULATION**					
10	377C	$0.0017037500	1.2626	$0.0021511571		
11	361C	$0.0000000000	1.0629	$0.0000000000		
12	Expense	$0.0000000000				
13						
14	**ISUP SIGNAL TRANSPORT**					
15	377C	$0.0004606834	1.2626	$0.0005816595		
16	57C	$0.0000561332	1.2626	$0.0000708739		
17	357C	$0.0000138739	1	$0.0000138739		
18	357CS	$0.0000012688	1	$0.0000012688		
19	845C	$0.0000051498	1	$0.0000051498		
20	85C	$0.0000006549	1	$0.0000006549		
21	4C	$0.0000010400	1	$0.0000010400		
22	361C	$0.0000000000	1.0629	$0.0000000000		
23	Expense	$0.0000000000				
24						
25	**TCAP SIGNAL TRANSPORT**					
26	377C	$0.0000500524	1.2626	$0.0000631962		
27	57C	$0.0000040053	1.2626	$0.0000050571		
28	357C	$0.0000016871	1	$0.0000016871		
29	357CS	$0.0000007522	1	$0.0000007522		
30	845C	$0.0000044537	1	$0.0000044537		
31	85C	$0.0000005664	1	$0.0000005664		
32	4C	$0.0000008995	1	$0.0000008995		
33	361C	$0.0000000000	1.0629	$0.0000000000		
34	Expense	$0.0000000000				
35						
36	**ISUP SIGNAL SWITCHING**					
37	377C	$0.0011002615	1.2626	$0.0013891917		
38	361C	$0.0012177831	1.0629	$0.0012943617		
39	Expense	$0.0001476061				
40						
41	**TCAP SIGNAL SWITCHING**					
42	377C	$0.0006256008	1.2626	$0.0007898844		
43	361C	$0.0012177831	1.0629	$0.0012943617		
44	Expense	$0.0001476061				

Section I - Signaling
SS7 STP-Inv & Exp Development

	A	B	C	D	E	F	G
1	Qwest Default Values 5/30/02 9:43:47 AM						
2							
3	South Dakota						
4							
5			**Account Code**		**Investment**	**Invst Loading**	**Loaded Invst or Exp per Port**
6						AP p13 cE	cE*cF
7	EF&I Capital Investment/Port:		**377C**	D15/C19	$408.35		
8	Total Software Investment/Port:		**377**	D16/C19	$7,815.19		
9	EF&I Patch Panel & Cabling/Port:		**377C**		$159.02		
10	**Total Investment/STP Port**			E7+E8+E9	$8,382.57	1.2626	**$ 10,583.84**
11							
12							
13	**STP Investments per Port and Getting Started Cost Calculations**						
14							
15	EF&I Capital Investment/Port:			$315.25			
16	Software Investment/Port:			$6,033.33			
17							
18							
19	Percent Working			**0.772 STP Port Average Fill**			
20							
21	Note 2: Calculation of Patch Panel Utilization Factor						
22				Ports	Patch Pnl		
23				32	48		
24				48	48		
25				64	72		
26				96	96		
27				128	144		
28					Patch Pnl UF		
29	slope				1.02		
30	slope+1				2.02		
31	Intercept				6.41		
32	Area under slope of STP ports installed				8461.24		
33	Area of Patch Panel ports installed				13168.55		
34	Best Fit Ratio of installed STP ports to installed Patch Panel ports				**0.642534**		

Section I - Signaling
SS7 STP-Inv & Exp Development

Cell: A9
Comment: EF&I Patch Panel & Cabling per Port Investment - Calculated by

419.16/24 - The $419.16 are the '96 costs from network. The 24 equates to the plugs that go into the patch panel (they have to be bought in lots of 24).

+

(3400/2)/24 - The $3,400 is the cost of a frame cabinet that has two sides = 48 patch panel plug ins (thus the 2) and then by 24 again in order to get to a cost of a single plug in.

+

(222/2)/8 - The $222 is the total cost of cabling for a whole cabinet. (One port's worth of cabling for BOTH sides - again both sides explaining the 2). The 8 is the capacity.

Divided by

The Patch Panel Utilization factor.

Cell: C19
Comment: Percent Working 12/95 = (Total Signaling Terminals(STs) in use as of 11/94 + additional STs to be used in 1995)/(Total STs installed as of 11/94 + additional STs to be installed in 1995)
Percent Working 12/95 = (2333 + 80 + 80)/(3095 + 135)=0.772

	A	B	C	D	E	F	G	H
1		Qwest Default Values 5/30/02 9:43:47 AM						
2					Shared Transport per MOU			
3	Row	South Dakota	Source or Calculation	Factor Value (AP p1 cB)	Switching	Transport	Direct Expenses	Total
4				A	B	C	D	E = B+D+C
5	1	**Investment**	sJ p2 cD		0.004020	0.003044		0.007064
6	2							
7	3	Investment Based Costs (IBC)	sJ p2 cJ		0.000747	0.000589		0.001336
8	4	Element Specific Expenses	sE p5 E8				0.000277	0.000277
9	*5*	***Total IBC + Element Specific Expenses***	***r3 + r4***		0.000747	0.000589	0.000277	0.001613
10	*6*							
11	*7*	***Marketing & Business Fees***						
12	8	Product Management Expense	cA*r5	0.01996	0.000015	0.000012	0.000006	0.000032
13	9	Sales Expense	cA*r5	0.01188	0.000009	0.000007	0.000003	0.000019
14	10	Product Advertising Expense	cA*r5	0.00000	0.000000	0.000000	0.000000	0.000000
15	11	Business Fees (Other Operating Taxes)	cA*(r5+r8:r10)	0.00148	0.000001	0.000001	0.000000	0.000002
16	*12*	***Marketing & Business Fees Total***	***Sum r8:r11***		0.000025	0.000020	0.000009	0.000054
17	13							
18	*14*	***Sub-Total Expenses***	***r5 + r12***		0.000772	0.000609	0.000286	0.001667
19	*15*							
20	*16*	***Other Direct Expenses***						
21	17	Network Operations	cA*r14	0.03483	0.000027	0.000021	0.000010	0.000058
22	18	Network Support Assets	cA*r14	0.01470	0.000011	0.000009	0.000004	0.000025
23	19	General Support Assets	cA*r14	0.08874	0.000069	0.000054	0.000025	0.000148
24	20	General Purpose Computers	cA*r14	0.04334	0.000033	0.000026	0.000012	0.000072
25	21	Uncollectible - Interconnect	cA*r14	0.00379	0.000003	0.000002	0.000001	0.000006
26	22	Accounting and Finance Expense	cA*r14	0.00735	0.000006	0.000004	0.000002	0.000012
27	23	Human Resources Expense	cA*r14	0.00829	0.000006	0.000005	0.000002	0.000014
28	24	Information Management Expense	cA*r14	0.07089	0.000055	0.000043	0.000020	0.000118
29	25	Intangibles	cA*r14	0.00000	0.000000	0.000000	0.000000	0.000000
30	*26*	***Total Other Direct Expenses***	***Sum r17:r25***		0.000210	0.000166	0.000078	0.000453
31	27							
32	*28*	***Total Element Long Run Incremental Costs***	***r 14 + r26***		0.000982	0.000774	0.000364	0.002121
33	29							
34	*30*	***Common***						
35	31	Executive Expense	cA*r28	0.01127	0.000011	0.000009	0.000004	0.000024
36	32	Planning Expense	cA*r28	0.00053	0.000001	0.000000	0.000000	0.000001
37	33	External Relations Expense	cA*r28	0.03785	0.000037	0.000029	0.000014	0.000080
38	34	Legal Expense	cA*r28	0.00472	0.000005	0.000004	0.000002	0.000010
39	35	Other Procurement Expense	cA*r28	0.00186	0.000002	0.000001	0.000001	0.000004
40	36	Research and Development Expense	cA*r28	0.00001	0.000000	0.000000	0.000000	0.000000
41	37	Other General and Admin Exp	cA*r28	0.01506	0.000015	0.000012	0.000005	0.000032
42	*38*	***Total Common Costs***	***Sum r31:r37***		0.000070	0.000055	0.000026	0.000151
43	39							
44	*40*	***TELRIC + Common***	***r27 + r38***		**0.001052**	**0.000829**	**0.000390**	**0.002272**
45								
46								
47	c = column, r = row, s = section, p = page, AP = Appendix							

	A	B	C	D	E	F	G	H	I	J
1	Qwest Default Values 5/30/02 9:43:47 AM									
2	South Dakota					**Shared Transport**				
3	**Acct**	**FRC**	**Account Name**	**Investment**	**Depreciation**	**Cost of Money**	**Income Tax**	**Ad Valorem**	**Maintenance**	**Total Capital Costs**
4				sJ p5 cN	cD*(AP p7 cA)/12	cD*(AP p7 cB)/12	cD*(AP p7 cC)/12	cD*(AP p7 cD)/12	cD*(AP p7 cE)/12	sum(cE:cJ)
5	**Switched Transport per MOU**									
6			**Switched**							
7		20C	Land	0.000012	0.000000	0.000001	0.000000	0.000000	0.000000	0.000002
8		110C	Building	0.000649	0.000017	0.000049	0.000018	0.000006	0.000008	0.000098
9	sE p6 E7	361C	General Purpose Comp.	0.000111	0.000018	0.000005	0.000002	0.000001	0.000000	0.000027
10		377C	Other Digital Equipment	0.003248	0.000354	0.000148	0.000056	0.000031	0.000033	0.000621
11			**Total**	**0.004020**	**0.000389**	**0.000203**	**0.000077**	**0.000038**	**0.000041**	**0.000747**
12			**Transport**							
13		20C	Land	0.000008	0.000000	0.000001	0.000000	0.000000	0.000000	0.000001
14		110C	Building	0.000432	0.000011	0.000032	0.000012	0.000004	0.000006	0.000065
15		85C	UG Cbl Nonmetallic	0.000022	0.000002	0.000001	0.000000	0.000000	0.000000	0.000004
16		357C	Other Digital Equipment	0.000986	0.000108	0.000045	0.000017	0.000009	0.000025	0.000205
17		357CS	Other Digital Equipment	0.001177	0.000129	0.000054	0.000020	0.000011	0.000030	0.000244
18		4C	Conduit System	0.000049	0.000001	0.000003	0.000001	0.000000	0.000000	0.000006
19		845C	Buried Cbl Nonmetallic	0.000369	0.000022	0.000021	0.000008	0.000004	0.000009	0.000064
20			**Total**	**0.003044**	**0.000274**	**0.000157**	**0.000059**	**0.000029**	**0.000070**	**0.000589**
21	**Investment Sources**									
22	Land = (AP p12 B10) * (377C + 57C+257C+257CS+357C+357CS)					Building = (AP p12 C10) *(377C+57C+257C+257CS+357C+357CS)				
23										
24										
25	This spreadsheet uses the investment related factors from the Investment Factors spreadsheet to calculate monthly or									
26	per event depreciation, cost of money, income tax, ad Valorem and maintenance expenses for recurring cost elements.									
27	The land and buildings investments are calculated from the circuit and switching investments by applying the									
28	appropriate factors from the L & B Factors spreadsheet.									
29										

	A	B	C	D	E	F
1	Qwest Default Values 5/30/02 9:43:47 AM					
2	**Shared Transport**					
3	**South Dakota**					
4	**Description**	**Source**	**Default Value**	**Overrides** AP p16 cC	**This Run**	**Instructions**
5						
6	Miles (Default is from SLUS)	SLUS	7.6144		7.6144	Enter average air miles per trunk
7	End Office to End Office Weighting	Transport Model	54.46%		54.46%	Percent of total local trunks from end office to end office
8	End Office to Local Tandem Weighting	Transport Model	8.62%		8.62%	Percent of total local trunks from end office to local Tandem.
9	End Office to Access Tandem	Transport Model	36.92%		36.92%	Percent of total local trunks from end office to Access Tandem.
10						
11	The spreadsheet shows the Override data entered by the user in ICM's custom input screens. If the user has input override data, the spreadsheet will determine this and display the override data in the Overrides column. The this run column will show the Override or the Default Value if no override has been entered.					
12						
13						
14						

Calculation of Fixed Investment per MOU

Qwest Default Values 5/30/02 9:43:47 AM

			IOF - FACILITIES				
	FRC		Set-Up Inv. per Call **A**	per Minute Inv. **B**	Average Hold Time **C**	Number of Legs **D**	Fixed Inv. per Minute of Use **E=((A/C)+B)*D**
			sJ p7 cG	sJ p7 cG	sD p13 E6		
End Office to End Office							
Fixed	357C		$ 0.00018800	$ 0.00069968	2.58	1.00	$ 0.000772
Fixed	357CS		$ 0.00020590	$ 0.00076631	2.58	1.00	$ 0.000846
Per Air Mile	357C	*	$ 0.00000508	$ 0.00001891	2.58	1.00	$ 0.000021
Per Air Mile	357CS	*	$ 0.00002603	$ 0.00009688	2.58	1.00	$ 0.000107
Per Air Mile	4C	*	$ 0.00001030	$ 0.00003833	2.58	1.00	$ 0.000042
Per Air Mile	845C	*	$ 0.00007750	$ 0.00028845	2.58	1.00	$ 0.000318
Per Air Mile	85C	*	$ 0.00000458	$ 0.00001703	2.58	1.00	$ 0.000019
End Office to Local Tandem							
Fixed	357C		$ 0.00018959	$ 0.00070561	2.58	2.00	$ 0.001558
Fixed	357CS		$ 0.00020765	$ 0.00077280	2.58	2.00	$ 0.001706
Per Air Mile	357C	*	$ 0.00000512	$ 0.00001907	2.58	1.00	$ 0.000021
Per Air Mile	357CS	*	$ 0.00002625	$ 0.00009770	2.58	1.00	$ 0.000108
Per Air Mile	4C	*	$ 0.00001039	$ 0.00003866	2.58	1.00	$ 0.000043
Per Air Mile	845C	*	$ 0.00007816	$ 0.00029089	2.58	1.00	$ 0.000321
Per Air Mile	85C	*	$ 0.00000461	$ 0.00001717	2.58	1.00	$ 0.000019
End Office to Access Tandem							
Fixed	357C		$ 0.00026822	$ 0.00099824	2.58	1.00	$ 0.001102
Fixed	357CS		$ 0.00029376	$ 0.00109330	2.58	1.00	$ 0.001207
Per Air Mile	357C	*	$ 0.00000725	$ 0.00002698	2.58	1.00	$ 0.000030
Per Air Mile	357CS	*	$ 0.00003714	$ 0.00013822	2.58	1.00	$ 0.000153
Per Air Mile	4C	*	$ 0.00001469	$ 0.00005469	2.58	1.00	$ 0.000060
Per Air Mile	845C	*	$ 0.00011057	$ 0.00041152	2.58	1.00	$ 0.000454
Per Air Mile	85C	*	$ 0.00000653	$ 0.00002430	2.58	1.00	$ 0.000027

* Per Air Mile investment from sJ p11 cG X Miles (sJ p3 E6)

Calculation of weighted total investments per MOU

Transport	FRC	Fixed M.O.U. Investments	Weighting	Total Investment/Unit
		F	G	H
		p4 cE summed by FRC		=F*G
End Office - End Office	357C	$ 0.000793	54.46%	**$ 0.000432**
	357CS	$ 0.000953	54.46%	**$ 0.000519**
	4C	$ 0.000042	54.46%	**$ 0.000023**
	845C	$ 0.000318	54.46%	**$ 0.000173**
	85C	$ 0.000019	54.46%	**$ 0.000010**
End Office - Local Tandem	357C	$ 0.001579	8.62%	**$ 0.000136**
	357CS	$ 0.001814	8.62%	**$ 0.000156**
	4C	$ 0.000043	8.62%	**$ 0.000004**
	845C	$ 0.000321	8.62%	**$ 0.000028**
	85C	$ 0.000019	8.62%	**$ 0.000002**
End Office - Access Tander	357C	$ 0.001132	36.92%	**$ 0.000418**
	357CS	$ 0.001360	36.92%	**$ 0.000502**
	4C	$ 0.000060	36.92%	**$ 0.000022**
	845C	$ 0.000454	36.92%	**$ 0.000168**
	85C	$ 0.000027	36.92%	**$ 0.000010**
Total Transport	357C			**$ 0.000986**
	357CS			**$ 0.001177**
	4C			**$ 0.000049**
	845C			**$ 0.000369**
	85C			**$ 0.000022**

Qwest Default Values 5/30/02 9:43:47 AM

Switching	FRC	Tandem Investment per MOU	Weighting	Total Investment/Unit
Elements				
		I	J	K
		Local UNE-Inv & Exp Development Tab		=I*J
End Office - End Office	377C	$ -	54%	**$ -**
End Office - Local Tandem	377C	$ 0.007132	9%	**$ 0.000615**
End Office - Access Tandem	377C	$ 0.007132	37%	**$ 0.002633**
Total Switching	377C			**$ 0.003248**

Cell: L5
Comment: Column F - 357C and 357CS investments are total of fixed and per air mile investments which was converted to fixed in column E. All other accounts = column E.

	A	B	C	D	E	F	G
1	Qwest Default Values 5/30/02 9:43:47 AM					South Dakota	
2	Type of Costs	Mileage Bands	Fixed or Variable	FRC	TOTAL DIRECT	NETWORK SUPPORT	Total
3							
4	End Office to End Office						
5	Conversation Minute	All	Fixed	357CS	0.00076631	0.00000000	0.00076631
6	Conversation Minute	All	Fixed	357C	0.00069330	0.00000638	0.00069968
7	Conversation Minute	All	Variable	357CS	0.00001272	0.00000000	0.00001272
8	Conversation Minute	All	Variable	357C	0.00000244	0.00000004	0.00000248
9	Conversation Minute	All	Variable	4C	0.00000309	0.00000194	0.00000503
10	Conversation Minute	All	Variable	85C	0.00000137	0.00000086	0.00000224
11	Conversation Minute	All	Variable	845C	0.00002327	0.00001461	0.00003788
12	Setup Time	All	Fixed	357CS	0.00020590	0.00000000	0.00020590
13	Setup Time	All	Fixed	357C	0.00018629	0.00000171	0.00018800
14	Setup Time	All	Variable	357CS	0.00000342	0.00000000	0.00000342
15	Setup Time	All	Variable	357C	0.00000066	0.00000001	0.00000067
16	Setup Time	All	Variable	4C	0.00000083	0.00000052	0.00000135
17	Setup Time	All	Variable	85C	0.00000037	0.00000023	0.00000060
18	Setup Time	All	Variable	845C	0.00000625	0.00000392	0.00001018
19							
20	**End Office to Tandem**						
21	Conversation Minute	All	Fixed	357CS	0.00077280	0.00000000	0.00077280
22	Conversation Minute	All	Fixed	357C	0.00069917	0.00000643	0.00070561
23	Conversation Minute	All	Variable	357CS	0.00001283	0.00000000	0.00001283
24	Conversation Minute	All	Variable	357C	0.00000246	0.00000005	0.00000250
25	Conversation Minute	All	Variable	4C	0.00000312	0.00000196	0.00000508
26	Conversation Minute	All	Variable	85C	0.00000139	0.00000087	0.00000226
27	Conversation Minute	All	Variable	845C	0.00002347	0.00001473	0.00003820
28	Setup Time	All	Fixed	357CS	0.00020765	0.00000000	0.00020765
29	Setup Time	All	Fixed	357C	0.00018786	0.00000173	0.00018959
30	Setup Time	All	Variable	357CS	0.00000345	0.00000000	0.00000345
31	Setup Time	All	Variable	357C	0.00000066	0.00000001	0.00000067
32	Setup Time	All	Variable	4C	0.00000084	0.00000053	0.00000136
33	Setup Time	All	Variable	85C	0.00000037	0.00000023	0.00000061
34	Setup Time	All	Variable	845C	0.00000631	0.00000396	0.00001026
35							
36	**End Office to Access Tandem**						
37	Conversation Minute	All	Fixed	357CS	0.00109330	0.00000000	0.00109330
38	Conversation Minute	All	Fixed	357C	0.00098913	0.00000910	0.00099824
39	Conversation Minute	All	Variable	357CS	0.00001815	0.00000000	0.00001815
40	Conversation Minute	All	Variable	357C	0.00000348	0.00000006	0.00000354
41	Conversation Minute	All	Variable	4C	0.00000441	0.00000277	0.00000718
42	Conversation Minute	All	Variable	85C	0.00000196	0.00000123	0.00000319
43	Conversation Minute	All	Variable	845C	0.00003321	0.00002084	0.00005405
44	Setup Time	All	Fixed	357CS	0.00029376	0.00000000	0.00029376
45	Setup Time	All	Fixed	357C	0.00026577	0.00000245	0.00026822
46	Setup Time	All	Variable	357CS	0.00000488	0.00000000	0.00000488
47	Setup Time	All	Variable	357C	0.00000093	0.00000002	0.00000095
48	Setup Time	All	Variable	4C	0.00000119	0.00000074	0.00000193
49	Setup Time	All	Variable	85C	0.00000053	0.00000033	0.00000086
50	Setup Time	All	Variable	845C	0.00000892	0.00000560	0.00001452
51	SOURCE: Transport Model, version 5						
52	TYPE: DS0 Switched Circuits (Does not include D4 Channel Banks						
53	therefore is not synonymous with DS0 Private Line Circuits.)						

	A	B	C	D	E	F	G
54							
55	**This spreadsheet summarizes the results of the Transport Model. Fixed is not an economic**						
56	**term. Fixed refers to investments that do not change based on distance.**						

Row	Qwest Default Values 5/30/02 9:43:47 AM	Source or Calculation	Factor Value [AP p1 cB]	DS0 UDIT/EEL Over 0 to 8 Miles, Fixed	Over 0 to 8 Miles, Per Air Mile	Over 8 to 25 Miles, Fixed	Over 8 to 25 Miles, Per Air Mile	Over 25 to 50 Miles, Fixed	Over 25 to 50 Miles, Per Air Mile	Over 50 Miles, Fixed	Over 50 Miles, Per Air Mile
	South Dakota		A	B	C	D	E	F	G	H	I
1	**Investment**	sK p8-9 cD Total		1468.1978	14.9387	1468.1978	14.9387	1468.1978	14.9387	1436.3083	10.7597
2											
3	Investment Based Costs (IBC)	sK p8-9 cJ Total		24.21609	0.21325	24.21609	0.21325	24.21609	0.21325	23.69011	0.15796
4	Element Specific Expenses	AP p3 F41*r3		0.10423	0.00092	0.10423	0.00092	0.10423	0.00092	0.10196	0.00068
5	***Total IBC + Element Specific Expenses***	*r3 + r4*		24.32031	0.21417	24.32031	0.21417	24.32031	0.21417	23.79207	0.15864
6											
7	***Marketing & Business Fees***										
8	Product Management Expense	cA*r5	0.01996	0.48537	0.00427	0.48537	0.00427	0.48537	0.00427	0.47482	0.00317
9	Sales Expense	cA*r5	0.01188	0.28886	0.00254	0.28886	0.00254	0.28886	0.00254	0.28258	0.00188
10	Product Advertising Expense	cA*r5	0.00000	0.00000	0.00000	0.00000	0.00000	0.00000	0.00000	0.00000	0.00000
11	Business Fees (Other Operating Taxes)	cA*(r5+r8:r10)	0.00148	0.03722	0.00033	0.03722	0.00033	0.03722	0.00033	0.03641	0.00024
12	***Marketing & Business Fees Total***	*Sum r8:r11*		0.81144	0.00715	0.81144	0.00715	0.81144	0.00715	0.79382	0.00529
13											
14	***Sub-Total Expenses***	*r5 + r12*		25.13176	0.22131	25.13176	0.22131	25.13176	0.22131	24.58589	0.16393
15											
16	***Other Direct Expenses***										
17	Network Operations	cA*r14	0.03483	0.87538	0.00771	0.87538	0.00771	0.87538	0.00771	0.85637	0.00571
18	Network Support Assets	cA*r14	0.01470	0.36952	0.00325	0.36952	0.00325	0.36952	0.00325	0.36150	0.00241
19	General Support Assets	cA*r14	0.08874	2.23025	0.01964	2.23025	0.01964	2.23025	0.01964	2.18180	0.01455
20	General Purpose Computers	cA*r14	0.04334	1.08926	0.00959	1.08926	0.00959	1.08926	0.00959	1.06560	0.00711
21	Uncollectible - Interconnect	cA*r14	0.00379	0.09515	0.00084	0.09515	0.00084	0.09515	0.00084	0.09308	0.00062
22	Accounting and Finance Expense	cA*r14	0.00735	0.18461	0.00163	0.18461	0.00163	0.18461	0.00163	0.18060	0.00120
23	Human Resources Expense	cA*r14	0.00829	0.20843	0.00184	0.20843	0.00184	0.20843	0.00184	0.20391	0.00136
24	Information Management Expense	cA*r14	0.07089	1.78151	0.01569	1.78151	0.01569	1.78151	0.01569	1.74282	0.01162
25	Intangibles	cA*r14	0.00000	0.00000	0.00000	0.00000	0.00000	0.00000	0.00000	0.00000	0.00000
26	***Total Other Direct Expenses***	*Sum r17:r25*		6.83413	0.06018	6.83413	0.06018	6.83413	0.06018	6.68569	0.04458
27											
28	***Total Element Long Run Incremental Costs***	*r 14 + r26*		**31.96588**	**0.28150**	**31.96588**	**0.28150**	**31.96588**	**0.28150**	**31.27158**	**0.20851**
29											
30	***Common***										
31	Executive Expense	cA*r28	0.01127	0.36018	0.00317	0.36018	0.00317	0.36018	0.00317	0.35235	0.00235
32	Planning Expense	cA*r28	0.00053	0.01679	0.00015	0.01679	0.00015	0.01679	0.00015	0.01643	0.00011
33	External Relations Expense	cA*r28	0.03785	1.20978	0.01065	1.20978	0.01065	1.20978	0.01065	1.18351	0.00789
34	Legal Expense	cA*r28	0.00472	0.15080	0.00133	0.15080	0.00133	0.15080	0.00133	0.14752	0.00098
35	Other Procurement Expense	cA*r28	0.00186	0.05944	0.00052	0.05944	0.00052	0.05944	0.00052	0.05815	0.00039
36	Research and Development Expense	cA*r28	0.00001	0.00019	0.00000	0.00019	0.00000	0.00019	0.00000	0.00018	0.00000
37	Other General and Admin Exp	cA*r28	0.01506	0.48153	0.00424	0.48153	0.00424	0.48153	0.00424	0.47107	0.00314
38	***Total Common Costs***	*Sum r31:r37*		**2.27870**	**0.02007**	**2.27870**	**0.02007**	**2.27870**	**0.02007**	**2.22921**	**0.01486**
39											
40	***TELRIC + Common***	*r27 + r38*		**34.24**	**0.30**	**34.24**	**0.30**	**34.24**	**0.30**	**33.50**	**0.22**

c = column, r = row, s = section, p = page, AP = Appendix

Qwest Default Values 5/30/02 9:43:47 AM

DS1 UDIT/EEL

Row	South Dakota	Source or Calculation	Factor Value [AP p1 cB]	Over 0 to 8 Miles, Fixed	Over 0 to 8 Miles, Per Air Mile	Over 8 to 25 Miles, Fixed	Over 8 to 25 Miles, Per Air Mile	Over 25 to 50 Miles, Fixed	Over 25 to 50 Miles, Per Air Mile	Over 50 Miles, Fixed	Over 50 Miles, Per Air Mile
			A	D	E	F	G	H	I	J	K
1	**Investment**	sK p10-11 cD Total		3333.85	157.51	3333.85	157.51	3333.85	157.51	2968.98	102.85
2											
3	Investment Based Costs (IBC)	sK p10-11 cJ Total		54.98761	2.23009	54.98761	2.23009	54.98761	2.23009	48.96962	1.51384
4	Element Specific Expenses	AP p3 F41*r3		0.23667	0.00960	0.23667	0.00960	0.23667	0.00960	0.21077	0.00652
5	***Total IBC + Element Specific Expenses***	***r3 + r4***		55.22428	2.23968	55.22428	2.23968	55.22428	2.23968	49.18039	1.52035
6											
7	***Marketing & Business Fees***										
8	Product Management Expense	cA*r5	0.01996	1.10212	0.04470	1.10212	0.04470	1.10212	0.04470	0.98150	0.03034
9	Sales Expense	cA*r5	0.01188	0.65591	0.02660	0.65591	0.02660	0.65591	0.02660	0.58413	0.01806
10	Product Advertising Expense	cA*r5	0.00000	0.00000	0.00000	0.00000	0.00000	0.00000	0.00000	0.00000	0.00000
11	Business Fees (Other Operating Taxes)	cA*(r5+r8:r10)	0.00148	0.08451	0.00343	0.08451	0.00343	0.08451	0.00343	0.07526	0.00233
12	***Marketing & Business Fees Total***	***Sum r8:r11***		1.84255	0.07473	1.84255	0.07473	1.84255	0.07473	1.64089	0.05073
13											
14	***Sub-Total Expenses***	***r5 + r12***		57.06683	2.31441	57.06683	2.31441	57.06683	2.31441	50.82128	1.57108
15											
16	***Other Direct Expenses***										
17	Network Operations	cA*r14	0.03483	1.98774	0.08062	1.98774	0.08062	1.98774	0.08062	1.77020	0.05472
18	Network Support Assets	cA*r14	0.01470	0.83908	0.03403	0.83908	0.03403	0.83908	0.03403	0.74725	0.02310
19	General Support Assets	cA*r14	0.08874	5.06423	0.20539	5.06423	0.20539	5.06423	0.20539	4.50999	0.13942
20	General Purpose Computers	cA*r14	0.04334	2.47340	0.10031	2.47340	0.10031	2.47340	0.10031	2.20270	0.06809
21	Uncollectible - Interconnect	cA*r14	0.00379	0.21605	0.00876	0.21605	0.00876	0.21605	0.00876	0.19241	0.00595
22	Accounting and Finance Expense	cA*r14	0.00735	0.41920	0.01700	0.41920	0.01700	0.41920	0.01700	0.37332	0.01154
23	Human Resources Expense	cA*r14	0.00829	0.47329	0.01919	0.47329	0.01919	0.47329	0.01919	0.42150	0.01303
24	Information Management Expense	cA*r14	0.07089	4.04529	0.16406	4.04529	0.16406	4.04529	0.16406	3.60256	0.11137
25	Intangibles	cA*r14	0.00000	0.00000	0.00000	0.00000	0.00000	0.00000	0.00000	0.00000	0.00000
26	***Total Other Direct Expenses***	***Sum r17:r25***		15.51829	0.62936	15.51829	0.62936	15.51829	0.62936	13.81993	0.42723
27											
28	***Total Element Long Run Incremental Costs***	***r 14 + r26***		**72.58512**	**2.94377**	**72.58512**	**2.94377**	**72.58512**	**2.94377**	**64.64121**	**1.99831**
29											
30	***Common***										
31	Executive Expense	cA*r28	0.01127	0.81785	0.03317	0.81785	0.03317	0.81785	0.03317	0.72834	0.02252
32	Planning Expense	cA*r28	0.00053	0.03813	0.00155	0.03813	0.00155	0.03813	0.00155	0.03396	0.00105
33	External Relations Expense	cA*r28	0.03785	2.74706	0.11141	2.74706	0.11141	2.74706	0.11141	2.44642	0.07563
34	Legal Expense	cA*r28	0.00472	0.34241	0.01389	0.34241	0.01389	0.34241	0.01389	0.30494	0.00943
35	Other Procurement Expense	cA*r28	0.00186	0.13497	0.00547	0.13497	0.00547	0.13497	0.00547	0.12020	0.00372
36	Research and Development Expense	cA*r28	0.00001	0.00043	0.00002	0.00043	0.00002	0.00043	0.00002	0.00038	0.00001
37	Other General and Admin Exp	cA*r28	0.01506	1.09341	0.04434	1.09341	0.04434	1.09341	0.04434	0.97374	0.03010
38	***Total Common Costs***	***Sum r31:r37***		**5.17427**	**0.20985**	**5.17427**	**0.20985**	**5.17427**	**0.20985**	**4.60798**	**0.14245**
39											
40	***TELRIC + Common***	***r27 + r38***		**77.76**	**3.15**	**77.76**	**3.15**	**77.76**	**3.15**	**69.25**	**2.14**

c = column, r = row, s = section, p = page, AP = Appendix

Qwest Default Values 5/30/02 9:43:47 AM

Row	South Dakota	Source or Calculation	Factor Value [AP p1 cB]	DS3 UDIT/EEL Over 0 to 8 Miles, Fixed	Over 0 to 8 Miles, Per Air Mile	Over 8 to 25 Miles, Fixed	Over 8 to 25 Miles, Per Air Mile	Over 25 to 50 Miles, Fixed	Over 25 to 50 Miles, Per Air Mile	Over 50 Miles, Fixed	Over 50 Miles, Per Air Mile
			A	D	E	F	G	H	I	J	K
1	**Investment**	sK p12-13 cD Total		$18,992.72	$1,581.99	$18,992.72	$1,581.99	$18,992.72	$1,581.99	$16,242.92	$886.87
2											
3	Investment Based Costs (IBC)	sK p12-13 cJ Total		313.2611	22.0689	313.2611	22.0689	313.2611	22.0689	267.9067	13.0970
4	Element Specific Expenses	AP p3 F41*r3		1.3483	0.0950	1.3483	0.0950	1.3483	0.0950	1.1531	0.0564
5	***Total IBC + Element Specific Expenses***	***r3 + r4***		314.6094	22.1639	314.6094	22.1639	314.6094	22.1639	269.0598	13.1534
6											
7	***Marketing & Business Fees***										
8	Product Management Expense	cA*r5	0.01996	6.2787	0.4423	6.2787	0.4423	6.2787	0.4423	5.3697	0.2625
9	Sales Expense	cA*r5	0.01188	3.7367	0.2632	3.7367	0.2632	3.7367	0.2632	3.1957	0.1562
10	Product Advertising Expense	cA*r5	0.00000	0.0000	0.0000	0.0000	0.0000	0.0000	0.0000	0.0000	0.0000
11	Business Fees (Other Operating Taxes)	cA*(r5+r8:r10)	0.00148	0.4815	0.0339	0.4815	0.0339	0.4815	0.0339	0.4118	0.0201
12	***Marketing & Business Fees Total***	***Sum r8:r11***		10.4969	0.7395	10.4969	0.7395	10.4969	0.7395	8.9771	0.4389
13											
14	***Sub-Total Expenses***	***r5 + r12***		325.1063	22.9034	325.1063	22.9034	325.1063	22.9034	278.0369	13.5922
15											
16	***Other Direct Expenses***										
17	Network Operations	cA*r14	0.03483	11.3240	0.7978	11.3240	0.7978	11.3240	0.7978	9.6845	0.4734
18	Network Support Assets	cA*r14	0.01470	4.7802	0.3368	4.7802	0.3368	4.7802	0.3368	4.0881	0.1999
19	General Support Assets	cA*r14	0.08874	28.8506	2.0325	28.8506	2.0325	28.8506	2.0325	24.6736	1.2062
20	General Purpose Computers	cA*r14	0.04334	14.0908	0.9927	14.0908	0.9927	14.0908	0.9927	12.0507	0.5891
21	Uncollectible - Interconnect	cA*r14	0.00379	1.2308	0.0867	1.2308	0.0867	1.2308	0.0867	1.0526	0.0515
22	Accounting and Finance Expense	cA*r14	0.00735	2.3882	0.1682	2.3882	0.1682	2.3882	0.1682	2.0424	0.0998
23	Human Resources Expense	cA*r14	0.00829	2.6963	0.1900	2.6963	0.1900	2.6963	0.1900	2.3060	0.1127
24	Information Management Expense	cA*r14	0.07089	23.0458	1.6235	23.0458	1.6235	23.0458	1.6235	19.7092	0.9635
25	Intangibles	cA*r14	0.00000	0.0000	0.0000	0.0000	0.0000	0.0000	0.0000	0.0000	0.0000
26	***Total Other Direct Expenses***	***Sum r17:r25***		88.4068	6.2282	88.4068	6.2282	88.4068	6.2282	75.6071	3.6962
27											
28	***Total Element Long Run Incremental Costs***	***r 14 + r26***		413.5130	29.1315	413.5130	29.1315	413.5130	29.1315	353.6440	17.2884
29											
30	***Common***										
31	Executive Expense	cA*r28	0.01127	4.6593	0.3282	4.6593	0.3282	4.6593	0.3282	3.9847	0.1948
32	Planning Expense	cA*r28	0.00053	0.2172	0.0153	0.2172	0.0153	0.2172	0.0153	0.1858	0.0091
33	External Relations Expense	cA*r28	0.03785	15.6499	1.1025	15.6499	1.1025	15.6499	1.1025	13.3840	0.6543
34	Legal Expense	cA*r28	0.00472	1.9507	0.1374	1.9507	0.1374	1.9507	0.1374	1.6683	0.0816
35	Other Procurement Expense	cA*r28	0.00186	0.7689	0.0542	0.7689	0.0542	0.7689	0.0542	0.6576	0.0321
36	Research and Development Expense	cA*r28	0.00001	0.0024	0.0002	0.0024	0.0002	0.0024	0.0002	0.0021	0.0001
37	Other General and Admin Exp	cA*r28	0.01506	6.2291	0.4388	6.2291	0.4388	6.2291	0.4388	5.3272	0.2604
38	***Total Common Costs***	***Sum r31:r37***		29.4775	2.0767	29.4775	2.0767	29.4775	2.0767	25.2097	1.2324
39											
40	***TELRIC + Common***	***r27 + r38***		$442.99	$31.21	$442.99	$31.21	$442.99	$31.21	$378.85	$18.52

c = column, r = row, s = section, p = page, AP = Appendix

Qwest Default Values 5/30/02 9:43:47 AM

Row	South Dakota	Source or Calculation	Factor Value [AP p1 cB]	OC3 UDIT/EEL Over 0 to 8 Miles, Fixed	Over 0 to 8 Miles, Per Air Mile	Over 8 to 25 Miles, Fixed	Over 8 to 25 Miles, Per Air Mile	Over 25 to 50 Miles, Fixed	Over 25 to 50 Miles, Per Air Mile	Over 50 Miles, Fixed	Over 50 Miles, Per Air Mile
			A	B	C	D	E	F	G	H	I
1	**Investment**	sK p14-15 cD Total		32703.209	2425.939	32703.209	2425.939	32703.209	2425.939	32703.209	3371.741
2											
3	Investment Based Costs (IBC)	sK p14-15 cJ Total		539.399	33.842	539.399	33.842	539.399	33.842	539.399	48.399
4	Element Specific Expenses	AP p3 F41*r3		2.3216	0.1457	2.3216	0.1457	2.3216	0.1457	2.3216	0.2083
5	***Total IBC + Element Specific Expenses***	***r3 + r4***		541.7201	33.9877	541.7201	33.9877	541.7201	33.9877	541.7201	48.6071
6											
7	***Marketing & Business Fees***										
8	Product Management Expense	cA*r5	0.01996	10.8112	0.6783	10.8112	0.6783	10.8112	0.6783	10.8112	0.9701
9	Sales Expense	cA*r5	0.01188	6.4341	0.4037	6.4341	0.4037	6.4341	0.4037	6.4341	0.5773
10	Product Advertising Expense	cA*r5	0.00000	0.0000	0.0000	0.0000	0.0000	0.0000	0.0000	0.0000	0.0000
11	Business Fees (Other Operating Taxes)	cA*(r5+r8:r10)	0.00148	0.8290	0.0520	0.8290	0.0520	0.8290	0.0520	0.8290	0.0744
12	***Marketing & Business Fees Total***	***Sum r8:r11***		18.0744	1.1340	18.0744	1.1340	18.0744	1.1340	18.0744	1.6218
13											
14	***Sub-Total Expenses***	***r5 + r12***		559.7945	35.1217	559.7945	35.1217	559.7945	35.1217	559.7945	50.2289
15											
16	***Other Direct Expenses***										
17	Network Operations	cA*r14	0.03483	19.4987	1.2234	19.4987	1.2234	19.4987	1.2234	19.4987	1.7496
18	Network Support Assets	cA*r14	0.01470	8.2309	0.5164	8.2309	0.5164	8.2309	0.5164	8.2309	0.7385
19	General Support Assets	cA*r14	0.08874	49.6774	3.1168	49.6774	3.1168	49.6774	3.1168	49.6774	4.4574
20	General Purpose Computers	cA*r14	0.04334	24.2627	1.5223	24.2627	1.5223	24.2627	1.5223	24.2627	2.1770
21	Uncollectible - Interconnect	cA*r14	0.00379	2.1194	0.1330	2.1194	0.1330	2.1194	0.1330	2.1194	0.1902
22	Accounting and Finance Expense	cA*r14	0.00735	4.1121	0.2580	4.1121	0.2580	4.1121	0.2580	4.1121	0.3690
23	Human Resources Expense	cA*r14	0.00829	4.6428	0.2913	4.6428	0.2913	4.6428	0.2913	4.6428	0.4166
24	Information Management Expense	cA*r14	0.07089	39.6821	2.4897	39.6821	2.4897	39.6821	2.4897	39.6821	3.5606
25	Intangibles	cA*r14	0.00000	0.0000	0.0000	0.0000	0.0000	0.0000	0.0000	0.0000	0.0000
26	***Total Other Direct Expenses***	***Sum r17:r25***		152.2260	9.5507	152.2260	9.5507	152.2260	9.5507	152.2260	13.6588
27											
28	***Total Element Long Run Incremental Costs***	***r 14 + r26***		712.0205	44.6725	712.0205	44.6725	712.0205	44.6725	712.0205	63.8877
29											
30	***Common***										
31	Executive Expense	cA*r28	0.01127	8.0227	0.5033	8.0227	0.5033	8.0227	0.5033	8.0227	0.7199
32	Planning Expense	cA*r28	0.00053	0.3741	0.0235	0.3741	0.0235	0.3741	0.0235	0.3741	0.0336
33	External Relations Expense	cA*r28	0.03785	26.9472	1.6907	26.9472	1.6907	26.9472	1.6907	26.9472	2.4179
34	Legal Expense	cA*r28	0.00472	3.3589	0.2107	3.3589	0.2107	3.3589	0.2107	3.3589	0.3014
35	Other Procurement Expense	cA*r28	0.00186	1.3240	0.0831	1.3240	0.0831	1.3240	0.0831	1.3240	0.1188
36	Research and Development Expense	cA*r28	0.00001	0.0042	0.0003	0.0042	0.0003	0.0042	0.0003	0.0042	0.0004
37	Other General and Admin Exp	cA*r28	0.01506	10.7257	0.6729	10.7257	0.6729	10.7257	0.6729	10.7257	0.9624
38	***Total Common Costs***	***Sum r31:r37***		50.7567	3.1845	50.7567	3.1845	50.7567	3.1845	50.7567	4.5543
39											
40	***TELRIC + Common***	***r27 + r38***		**$762.78**	**$47.86**	**$762.78**	**$47.86**	**$762.78**	**$47.86**	**$762.78**	**$68.44**

c = column, r = row, s = section, p = page, AP = Appendix

Row	Qwest Default Values 5/30/02 9:43:47 AM South Dakota	Source or Calculation	Factor Value [AP p1 cB]	OC12 UDIT/EEL Over 0 to 8 Miles, Fixed	Over 0 to 8 Miles, Per Air Mile	Over 8 to 25 Miles, Fixed	Over 8 to 25 Miles, Per Air Mile	Over 25 to 50 Miles, Fixed	Over 25 to 50 Miles, Per Air Mile	Over 50 Miles, Fixed	Over 50 Miles, Per Air Mile
			A	D	E	F	G	H	I	J	K
1	**Investment**	sK p16-17 cD Total		$92,776.29	$4,815.98	$92,776.29	$4,815.98	$92,776.29	$4,815.98	$92,776.29	$6,955.05
2											
3	Investment Based Costs (IBC)	sK p16-17 cJ Total		1530.2289	67.1834	1530.2289	67.1834	1530.2289	67.1834	1530.2289	100.3939
4	Element Specific Expenses	AP p3 F41*r3		6.5861	0.2892	6.5861	0.2892	6.5861	0.2892	6.5861	0.4321
5	***Total IBC + Element Specific Expenses***	*r3 + r4*		1536.8150	67.4726	1536.8150	67.4726	1536.8150	67.4726	1536.8150	100.8260
6											
7	***Marketing & Business Fees***										
8	Product Management Expense	cA*r5	0.01996	30.6705	1.3466	30.6705	1.3466	30.6705	1.3466	30.6705	2.0122
9	Sales Expense	cA*r5	0.01188	18.2531	0.8014	18.2531	0.8014	18.2531	0.8014	18.2531	1.1975
10	Product Advertising Expense	cA*r5	0.00000	0.0000	0.0000	0.0000	0.0000	0.0000	0.0000	0.0000	0.0000
11	Business Fees (Other Operating Taxes)	cA*(r5+r8:r10)	0.00148	2.3518	0.1033	2.3518	0.1033	2.3518	0.1033	2.3518	0.1543
12	***Marketing & Business Fees Total***	*Sum r8:r11*		51.2755	2.2512	51.2755	2.2512	51.2755	2.2512	51.2755	3.3640
13											
14	***Sub-Total Expenses***	*r5 + r12*		1588.0906	69.7238	1588.0906	69.7238	1588.0906	69.7238	1588.0906	104.1901
15											
16	***Other Direct Expenses***										
17	Network Operations	cA*r14	0.03483	55.3161	2.4286	55.3161	2.4286	55.3161	2.4286	55.3161	3.6291
18	Network Support Assets	cA*r14	0.01470	23.3504	1.0252	23.3504	1.0252	23.3504	1.0252	23.3504	1.5320
19	General Support Assets	cA*r14	0.08874	140.9306	6.1874	140.9306	6.1874	140.9306	6.1874	140.9306	9.2461
20	General Purpose Computers	cA*r14	0.04334	68.8312	3.0220	68.8312	3.0220	68.8312	3.0220	68.8312	4.5158
21	Uncollectible - Interconnect	cA*r14	0.00379	6.0124	0.2640	6.0124	0.2640	6.0124	0.2640	6.0124	0.3945
22	Accounting and Finance Expense	cA*r14	0.00735	11.6658	0.5122	11.6658	0.5122	11.6658	0.5122	11.6658	0.7654
23	Human Resources Expense	cA*r14	0.00829	13.1711	0.5783	13.1711	0.5783	13.1711	0.5783	13.1711	0.8641
24	Information Management Expense	cA*r14	0.07089	112.5748	4.9425	112.5748	4.9425	112.5748	4.9425	112.5748	7.3857
25	Intangibles	cA*r14	0.00000	0.0000	0.0000	0.0000	0.0000	0.0000	0.0000	0.0000	0.0000
26	***Total Other Direct Expenses***	*Sum r17:r25*		431.8524	18.9601	431.8524	18.9601	431.8524	18.9601	431.8524	28.3326
27											
28	***Total Element Long Run Incremental Costs***	*r 14 + r26*		**2019.9430**	**88.6839**	**2019.9430**	**88.6839**	**2019.9430**	**88.6839**	**2019.9430**	**132.5227**
29											
30	***Common***										
31	Executive Expense	cA*r28	0.01127	22.7597	0.9992	22.7597	0.9992	22.7597	0.9992	22.7597	1.4932
32	Planning Expense	cA*r28	0.00053	1.0612	0.0466	1.0612	0.0466	1.0612	0.0466	1.0612	0.0696
33	External Relations Expense	cA*r28	0.03785	76.4470	3.3563	76.4470	3.3563	76.4470	3.3563	76.4470	5.0155
34	Legal Expense	cA*r28	0.00472	9.5288	0.4184	9.5288	0.4184	9.5288	0.4184	9.5288	0.6252
35	Other Procurement Expense	cA*r28	0.00186	3.7561	0.1649	3.7561	0.1649	3.7561	0.1649	3.7561	0.2464
36	Research and Development Expense	cA*r28	0.00001	0.0119	0.0005	0.0119	0.0005	0.0119	0.0005	0.0119	0.0008
37	Other General and Admin Exp	cA*r28	0.01506	30.4281	1.3359	30.4281	1.3359	30.4281	1.3359	30.4281	1.9963
38	***Total Common Costs***	*Sum r31:r37*		**143.9927**	**6.3219**	**143.9927**	**6.3219**	**143.9927**	**6.3219**	**143.9927**	**9.4469**
39											
40	***TELRIC + Common***	*r27 + r38*		**$2,163.94**	**$95.01**	**$2,163.94**	**$95.01**	**$2,163.94**	**$95.01**	**$2,163.94**	**$141.97**

c = column, r = row, s = section, p = page, AP = Appendix

Qwest Default Values 5/30/02 9:43:47 AM

OC48 UDIT/EEL

Row	South Dakota	Source or Calculation	Factor Value [AP p1 cB]	Over 0 to 8 Miles, Fixed	Over 0 to 8 Miles, Per Air Mile	Over 8 to 25 Miles, Fixed	Over 8 to 25 Miles, Per Air Mile	Over 25 to 50 Miles, Fixed	Over 25 to 50 Miles, Per Air Mile	Over 50 Miles, Fixed	Over 50 Miles, Per Air Mile
			A	D	E	F	G	H	I	J	K
1	**Investment**	sK p18-19 cD Total		$189,444.34	$12,179.09	$189,444.34	$12,179.09	$189,444.34	$12,179.09	$189,444.34	$17,782.46
2											
3	Investment Based Costs (IBC)	sK p18-19 cJ Total		3124.6476	169.8996	3124.6476	169.8996	3124.6476	169.8996	3124.6476	257.0832
4	Element Specific Expenses	AP p3 F41*r3		13.4485	0.7312	13.4485	0.7312	13.4485	0.7312	13.4485	1.1065
5	***Total IBC + Element Specific Expenses***	*r3 + r4*		3138.0961	170.6308	3138.0961	170.6308	3138.0961	170.6308	3138.0961	258.1897
6											
7	***Marketing & Business Fees***										
8	Product Management Expense	cA*r5	0.01996	62.6277	3.4053	62.6277	3.4053	62.6277	3.4053	62.6277	5.1527
9	Sales Expense	cA*r5	0.01188	37.2720	2.0266	37.2720	2.0266	37.2720	2.0266	37.2720	3.0666
10	Product Advertising Expense	cA*r5	0.00000	0.0000	0.0000	0.0000	0.0000	0.0000	0.0000	0.0000	0.0000
11	Business Fees (Other Operating Taxes)	cA*(r5+r8:r10)	0.00148	4.8023	0.2611	4.8023	0.2611	4.8023	0.2611	4.8023	0.3951
12	***Marketing & Business Fees Total***	*Sum r8:r11*		104.7020	5.6931	104.7020	5.6931	104.7020	5.6931	104.7020	8.6144
13											
14	***Sub-Total Expenses***	*r5 + r12*		3242.7980	176.3239	3242.7980	176.3239	3242.7980	176.3239	3242.7980	266.8042
15											
16	***Other Direct Expenses***										
17	Network Operations	cA*r14	0.03483	112.9525	6.1417	112.9525	6.1417	112.9525	6.1417	112.9525	9.2933
18	Network Support Assets	cA*r14	0.01470	47.6804	2.5926	47.6804	2.5926	47.6804	2.5926	47.6804	3.9229
19	General Support Assets	cA*r14	0.08874	287.7729	15.6474	287.7729	15.6474	287.7729	15.6474	287.7729	23.6768
20	General Purpose Computers	cA*r14	0.04334	140.5498	7.6423	140.5498	7.6423	140.5498	7.6423	140.5498	11.5639
21	Uncollectible - Interconnect	cA*r14	0.00379	12.2771	0.6676	12.2771	0.6676	12.2771	0.6676	12.2771	1.0101
22	Accounting and Finance Expense	cA*r14	0.00735	23.8209	1.2952	23.8209	1.2952	23.8209	1.2952	23.8209	1.9599
23	Human Resources Expense	cA*r14	0.00829	26.8947	1.4624	26.8947	1.4624	26.8947	1.4624	26.8947	2.2128
24	Information Management Expense	cA*r14	0.07089	229.8719	12.4991	229.8719	12.4991	229.8719	12.4991	229.8719	18.9129
25	Intangibles	cA*r14	0.00000	0.0000	0.0000	0.0000	0.0000	0.0000	0.0000	0.0000	0.0000
26	***Total Other Direct Expenses***	*Sum r17:r25*		881.8201	47.9481	881.8201	47.9481	881.8201	47.9481	881.8201	72.5526
27											
28	***Total Element Long Run Incremental Costs***	*r 14 + r26*		4124.6182	224.2720	4124.6182	224.2720	4124.6182	224.2720	4124.6182	339.3567
29											
30	***Common***										
31	Executive Expense	cA*r28	0.01127	46.4741	2.5270	46.4741	2.5270	46.4741	2.5270	46.4741	3.8237
32	Planning Expense	cA*r28	0.00053	2.1668	0.1178	2.1668	0.1178	2.1668	0.1178	2.1668	0.1783
33	External Relations Expense	cA*r28	0.03785	156.1007	8.4878	156.1007	8.4878	156.1007	8.4878	156.1007	12.8433
34	Legal Expense	cA*r28	0.00472	19.4574	1.0580	19.4574	1.0580	19.4574	1.0580	19.4574	1.6009
35	Other Procurement Expense	cA*r28	0.00186	7.6698	0.4170	7.6698	0.4170	7.6698	0.4170	7.6698	0.6310
36	Research and Development Expense	cA*r28	0.00001	0.0242	0.0013	0.0242	0.0013	0.0242	0.0013	0.0242	0.0020
37	Other General and Admin Exp	cA*r28	0.01506	62.1325	3.3784	62.1325	3.3784	62.1325	3.3784	62.1325	5.1120
38	***Total Common Costs***	*Sum r31:r37*		294.0255	15.9873	294.0255	15.9873	294.0255	15.9873	294.0255	24.1912
39											
40	***TELRIC + Common***	*r27 + r38*		**$4,418.64**	**$240.26**	**$4,418.64**	**$240.26**	**$4,418.64**	**$240.26**	**$4,418.64**	**$363.55**

c = column, r = row, s = section, p = page, AP = Appendix

Row	Qwest Default Values 5/30/02 9:43:47 AM South Dakota	Source or Calculation	Factor Value [AP p1 cB]	OCN E-UDIT OC3 E-UDIT	OC12 E-UDIT	OC48 E-UDIT
			A	F	G	F
1	**Investment**	sK p20 cD Total		$45,904.82	$65,472.60	$182,787.95
2						
3	Investment Based Costs (IBC)	sK p20 cJ Total		661.9980	964.4741	2777.9179
4	Element Specific Expenses	AP p3 F41*r3		2.8492	4.1511	11.9562
5	***Total IBC + Element Specific Expenses***	*r3 + r4*		664.8473	968.6252	2789.8741
6						
7	***Marketing & Business Fees***					
8	Product Management Expense	cA*r5	0.01996	13.2685	19.3311	55.6781
9	Sales Expense	cA*r5	0.01188	7.8966	11.5046	33.1361
10	Product Advertising Expense	cA*r5	0.00000	0.0000	0.0000	0.0000
11	Business Fees (Other Operating Taxes)	cA*(r5+r8:r10)	0.00148	1.0174	1.4823	4.2694
12	***Marketing & Business Fees Total***	*Sum r8:r11*		22.1825	32.3180	93.0836
13						
14	***Sub-Total Expenses***	*r5 + r12*		687.0298	1000.9432	2882.9577
15						
16	***Other Direct Expenses***					
17	Network Operations	cA*r14	0.03483	23.9305	34.8647	100.4186
18	Network Support Assets	cA*r14	0.01470	10.1017	14.7173	42.3895
19	General Support Assets	cA*r14	0.08874	60.9685	88.8259	255.8399
20	General Purpose Computers	cA*r14	0.04334	29.7773	43.3830	124.9535
21	Uncollectible - Interconnect	cA*r14	0.00379	2.6011	3.7895	10.9147
22	Accounting and Finance Expense	cA*r14	0.00735	5.0468	7.3527	21.1776
23	Human Resources Expense	cA*r14	0.00829	5.6980	8.3015	23.9103
24	Information Management Expense	cA*r14	0.07089	48.7014	70.9537	204.3639
25	Intangibles	cA*r14	0.00000	0.0000	0.0000	0.0000
26	***Total Other Direct Expenses***	*Sum r17:r25*		186.8253	272.1884	783.9681
27						
28	***Total Element Long Run Incremental Costs***	*r 14 + r26*		**873.8551**	**1273.1316**	**3666.9258**
29						
30	***Common***					
31	Executive Expense	cA*r28	0.01127	9.8461	14.3450	41.3170
32	Planning Expense	cA*r28	0.00053	0.4591	0.6688	1.9264
33	External Relations Expense	cA*r28	0.03785	33.0720	48.1831	138.7789
34	Legal Expense	cA*r28	0.00472	4.1223	6.0058	17.2983
35	Other Procurement Expense	cA*r28	0.00186	1.6249	2.3674	6.8187
36	Research and Development Expense	cA*r28	0.00001	0.0051	0.0075	0.0215
37	Other General and Admin Exp	cA*r28	0.01506	13.1636	19.1782	55.2379
38	***Total Common Costs***	*Sum r31:r37*		**62.2932**	**90.7558**	**261.3987**
39						
40	***TELRIC + Common***	*r27 + r38*		**$936.15**	**$1,363.89**	**$3,928.32**

c = column, r = row, s = section, p = Appendix

	A	B	C	D	E	F	G	H	I	J
1	Qwest Default Values 5/30/02 9:43:47 AM						DS0 UDIT/EEL			
2	South Dakota			Investment	Depreciation	Cost of Money	Income Tax	Ad Valorem	Maintenance	Total Capital Costs
3	Acct	FRC	Account Name		cD*(AP p7 cA)/12	cD*(AP p7 cB)/12	cD*(AP p7 cC)/12	cD*(AP p7 cD)/12	cD*(AP p7 cE)/12	sum(cE:cI)
4	**DS0 Unbundled Dedicated Interoffice Transport**									
5	**OVER 0 TO 8**		**FIXED**							
6		20C	Land	4.55	0.0000	0.0366	0.0138	0.0036	0.0048	0.0589
7		110C	Building	243.77	0.5245	1.5209	0.5752	0.1939	0.2594	3.0739
8		357CS	Other Digital Equipment	118.96	1.0877	0.4506	0.1704	0.0946	0.2527	2.0561
9		357C	Other Digital Equipment	1100.91	10.0657	4.1701	1.5770	0.8758	2.3385	19.0271
10			**Total**	**1468.20**	**11.6780**	**6.1783**	**2.3364**	**1.1680**	**2.8555**	**24.2161**
11	**OVER 0 TO 8**		**VARIABLE**							
12		20C	Land	0.01	0.0000	0.0000	0.0000	0.0000	0.0000	0.0001
13		110C	Building	0.32	0.0007	0.0020	0.0008	0.0003	0.0003	0.0040
14		357CS	Other Digital Equipment	1.29	0.0118	0.0049	0.0018	0.0010	0.0027	0.0223
15		357C	Other Digital Equipment	0.31	0.0028	0.0012	0.0004	0.0002	0.0006	0.0053
16		4C	Conduit System	1.46	0.0026	0.0079	0.0030	0.0012	0.0009	0.0155
17		85C	UG Cbl Nonmetallic	0.65	0.0038	0.0031	0.0012	0.0005	0.0010	0.0096
18		845C	Buried Cbl Nonmetallic	10.91	0.0554	0.0519	0.0196	0.0087	0.0210	0.1565
19			**Total**	**14.94**	**0.0771**	**0.0709**	**0.0268**	**0.0119**	**0.0266**	**0.2133**
20	**OVER 8 TO 25**		**FIXED**							
21		20C	Land	4.55	0.0000	0.0366	0.0138	0.0036	0.0048	0.0589
22		110C	Building	243.77	0.5245	1.5209	0.5752	0.1939	0.2594	3.0739
23		357CS	Other Digital Equipment	118.96	1.0877	0.4506	0.1704	0.0946	0.2527	2.0561
24		357C	Other Digital Equipment	1100.91	10.0657	4.1701	1.5770	0.8758	2.3385	19.0271
25			**Total**	**1468.20**	**11.6780**	**6.1783**	**2.3364**	**1.1680**	**2.8555**	**24.2161**
26	**OVER 8 TO 25**		**VARIABLE**							
27		20C	Land	0.01	0.0000	0.0000	0.0000	0.0000	0.0000	0.0001
28		110C	Building	0.32	0.0007	0.0020	0.0008	0.0003	0.0003	0.0040
29		357CS	Other Digital Equipment	1.29	0.0118	0.0049	0.0018	0.0010	0.0027	0.0223
30		357C	Other Digital Equipment	0.31	0.0028	0.0012	0.0004	0.0002	0.0006	0.0053
31		4C	Conduit System	1.46	0.0026	0.0079	0.0030	0.0012	0.0009	0.0155
32		85C	UG Cbl Nonmetallic	0.65	0.0038	0.0031	0.0012	0.0005	0.0010	0.0096
33		845C	Buried Cbl Nonmetallic	10.91	0.0554	0.0519	0.0196	0.0087	0.0210	0.1565
34			**Total**	**14.94**	**0.0771**	**0.0709**	**0.0268**	**0.0119**	**0.0266**	**0.2133**
35	**OVER 25 TO 50**		**FIXED**							
36		20C	Land	4.55	0.0000	0.0366	0.0138	0.0036	0.0048	0.0589
37		110C	Building	243.77	0.5245	1.5209	0.5752	0.1939	0.2594	3.0739
38		357CS	Other Digital Equipment	118.96	1.0877	0.4506	0.1704	0.0946	0.2527	2.0561
39		357C	Other Digital Equipment	1100.91	10.0657	4.1701	1.5770	0.8758	2.3385	19.0271
40			**Total**	**1468.20**	**11.6780**	**6.1783**	**2.3364**	**1.1680**	**2.8555**	**24.2161**
41	**OVER 25 TO 50**		**VARIABLE**							
42		20C	Land	0.01	0.0000	0.0000	0.0000	0.0000	0.0000	0.0001

Section K - Unbundled De[illegible]ted Interoffice Transport
DS0 UDIT-Inve[illegible]ent Cost Calc

	A	B	C	D	E	F	G	H	I	J
1	Qwest Default Values 5/30/02 9:43:47 AM						**DS0 UDIT/EEL**			
2	South Dakota			Investment	Depreciation	Cost of Money	Income Tax	Ad Valorem	Maintenance	Total Capital Costs
3	Acct	FRC	Account Name		cD*(AP p7 cA)/12	cD*(AP p7 cB)/12	cD*(AP p7 cC)/12	cD*(AP p7 cD)/12	cD*(AP p7 cE)/12	sum(cE:cI)
4	**DS0 Unbundled Dedicated Interoffice Transport**									
43		110C	Building	0.32	0.0007	0.0020	0.0008	0.0003	0.0003	0.0040
44		357CS	Other Digital Equipment	1.29	0.0118	0.0049	0.0018	0.0010	0.0027	0.0223

	A	B	C	D	E	F	G	H	I	J
1	Qwest Default Values 5/30/02 9:43:47 AM						DS1 UDIT/EEL			
2	South Dakota			Investment	Depreciation	Cost of Money	Income Tax	Ad Valorem	Maintenance	Total Capital Costs
3	Acct	FRC	Account Name		cD*(AP p7 cA)/12	cD*(AP p7 cB)/12	cD*(AP p7 cC)/12	cD*(AP p7 cD)/12	cD*(AP p7 cE)/12	sum(cE:cI)
4	**DS1 Unbundled Dedicated Interoffice Transport**									
5	**OVER 0 TO 8**		**FIXED**							
6		20C	Land	10.34	0.0000	0.0831	0.0314	0.0082	0.0110	0.1338
7		110C	Building	553.53	1.1911	3.4535	1.3060	0.4404	0.5891	6.9800
8		357CS	Other Digital Equipment	1311.79	11.9939	4.9689	1.8791	1.0436	2.7864	22.6718
9		357C	Other Digital Equipment	1458.19	13.3324	5.5234	2.0888	1.1600	3.0974	25.2020
10			**Total**	**3333.85**	**26.5173**	**14.0290**	**5.3053**	**2.6522**	**6.4839**	**54.9876**
11	**OVER 0 TO 8**		**VARIABLE**							
12		20C	Land	0.04	0.0000	0.0003	0.0001	0.0000	0.0000	0.0005
13		110C	Building	2.27	0.0049	0.0142	0.0054	0.0018	0.0024	0.0286
14		357CS	Other Digital Equipment	9.21	0.0842	0.0349	0.0132	0.0073	0.0196	0.1592
15		357C	Other Digital Equipment	2.15	0.0197	0.0081	0.0031	0.0017	0.0046	0.0372
16		4C	Conduit System	16.61	0.0297	0.0894	0.0338	0.0132	0.0100	0.1761
17		85C	UG Cbl Nonmetallic	7.38	0.0435	0.0348	0.0132	0.0059	0.0116	0.1089
18		845C	Buried Cbl Nonmetallic	119.85	0.6083	0.5699	0.2155	0.0953	0.2305	1.7195
19			**Total**	**157.51**	**0.7902**	**0.7516**	**0.2842**	**0.1253**	**0.2787**	**2.2301**
20	**OVER 8 TO 25**		**FIXED**							
21		20C	Land	10.34	0.0000	0.0831	0.0314	0.0082	0.0110	0.1338
22		110C	Building	553.53	1.1911	3.4535	1.3060	0.4404	0.5891	6.9800
23		357CS	Other Digital Equipment	1311.79	11.9939	4.9689	1.8791	1.0436	2.7864	22.6718
24		357C	Other Digital Equipment	1458.19	13.3324	5.5234	2.0888	1.1600	3.0974	25.2020
25			**Total**	**3333.85**	**26.5173**	**14.0290**	**5.3053**	**2.6522**	**6.4839**	**54.9876**
26	**OVER 8 TO 25**		**VARIABLE**							
27		20C	Land	0.04	0.0000	0.0003	0.0001	0.0000	0.0000	0.0005
28		110C	Building	2.27	0.0049	0.0142	0.0054	0.0018	0.0024	0.0286
29		357CS	Other Digital Equipment	9.21	0.0842	0.0349	0.0132	0.0073	0.0196	0.1592
30		357C	Other Digital Equipment	2.15	0.0197	0.0081	0.0031	0.0017	0.0046	0.0372
31		4C	Conduit System	16.61	0.0297	0.0894	0.0338	0.0132	0.0100	0.1761
32		85C	UG Cbl Nonmetallic	7.38	0.0435	0.0348	0.0132	0.0059	0.0116	0.1089
33		845C	Buried Cbl Nonmetallic	119.85	0.6083	0.5699	0.2155	0.0953	0.2305	1.7195
34			**Total**	**157.51**	**0.7902**	**0.7516**	**0.2842**	**0.1253**	**0.2787**	**2.2301**
35	**OVER 25 TO 50**		**FIXED**							
36		20C	Land	10.34	0.0000	0.0831	0.0314	0.0082	0.0110	0.1338
37		110C	Building	553.53	1.1911	3.4535	1.3060	0.4404	0.5891	6.9800
38		357CS	Other Digital Equipment	1311.79	11.9939	4.9689	1.8791	1.0436	2.7864	22.6718
39		357C	Other Digital Equipment	1458.19	13.3324	5.5234	2.0888	1.1600	3.0974	25.2020
40			**Total**	**3333.85**	**26.5173**	**14.0290**	**5.3053**	**2.6522**	**6.4839**	**54.9876**
41	**OVER 25 TO 50**		**VARIABLE**							
42		20C	Land	0.04	0.0000	0.0003	0.0001	0.0000	0.0000	0.0005

	A	B	C	D	E	F	G	H	I	J
1	Qwest Default Values 5/30/02 9:43:47 AM						DS1 UDIT/EEL			
2	South Dakota			Investment	Depreciation	Cost of Money	Income Tax	Ad Valorem	Maintenance	Total Capital Costs
3	Acct	FRC	Account Name		cD*(AP p7 cA)/12	cD*(AP p7 cB)/12	cD*(AP p7 cC)/12	cD*(AP p7 cD)/12	cD*(AP p7 cE)/12	sum(cE:cI)
43		110C	Building	2.27	0.0049	0.0142	0.0054	0.0018	0.0024	0.0286
44		357CS	Other Digital Equipment	9.21	0.0842	0.0349	0.0132	0.0073	0.0196	0.1592

	A	B	C	D	E	F	G	H	I	J
1	Qwest Default Values 5/30/02 9:43:47 AM						DS3 UDIT/EEL			
2	South Dakota			Investment	Depreciation	Cost of Money	Income Tax	Ad Valorem	Maintenance	Total Capital Costs
3	Acct	FRC	Account Name		cD*(AP p7 cA)/12	cD*(AP p7 cB)/12	cD*(AP p7 cC)/12	cD*(AP p7 cD)/12	cD*(AP p7 cE)/12	sum(cE:cI)
4	DS3 Unbundled Dedicated Interoffice Transport									
5	OVER 0 TO 8		FIXED							
6		20C	Land	58.89	0.0000	0.4736	0.1791	0.0469	0.0627	0.7623
7		110C	Building	3153.44	6.7854	19.6745	7.4402	2.5086	3.3559	39.7646
8		357CS	Other Digital Equipment	13945.62	127.5064	52.8243	19.9762	11.0941	29.6227	241.0237
9		357C	Other Digital Equipment	1834.77	16.7755	6.9499	2.6282	1.4596	3.8973	31.7105
10			**Total**	**18992.72**	**151.0672**	**79.9224**	**30.2237**	**15.1092**	**36.9386**	**313.2611**
11	OVER 0 TO 8		VARIABLE							
12		4C	Conduit System	176.38	0.3152	0.9495	0.3591	0.1403	0.1064	1.8705
13		85C	UG Cbl Nonmetallic	78.36	0.4620	0.3693	0.1397	0.0623	0.1234	1.1568
14		845C	Buried Cbl Nonmetallic	1327.24	6.7360	6.3110	2.3866	1.0559	2.5522	19.0416
15			**Total**	**1581.99**	**7.5132**	**7.6298**	**2.8853**	**1.2585**	**2.7820**	**22.0689**
16	OVER 8 TO 25		FIXED							
17		20C	Land	58.89	0.0000	0.4736	0.1791	0.0469	0.0627	0.7623
18		110C	Building	3153.44	6.7854	19.6745	7.4402	2.5086	3.3559	39.7646
19		357CS	Other Digital Equipment	13945.62	127.5064	52.8243	19.9762	11.0941	29.6227	241.0237
20		357C	Other Digital Equipment	1834.77	16.7755	6.9499	2.6282	1.4596	3.8973	31.7105
21			**Total**	**18992.72**	**151.0672**	**79.9224**	**30.2237**	**15.1092**	**36.9386**	**313.2611**
22	OVER 8 TO 25		VARIABLE							
23		4C	Conduit System	176.38	0.3152	0.9495	0.3591	0.1403	0.1064	1.8705
24		85C	UG Cbl Nonmetallic	78.36	0.4620	0.3693	0.1397	0.0623	0.1234	1.1568
25		845C	Buried Cbl Nonmetallic	1327.24	6.7360	6.3110	2.3866	1.0559	2.5522	19.0416
26			**Total**	**1581.99**	**7.5132**	**7.6298**	**2.8853**	**1.2585**	**2.7820**	**22.0689**
27	OVER 25 TO 50		FIXED							
28		20C	Land	58.89	0.0000	0.4736	0.1791	0.0469	0.0627	0.7623
29		110C	Building	3153.44	6.7854	19.6745	7.4402	2.5086	3.3559	39.7646
30		357CS	Other Digital Equipment	13945.62	127.5064	52.8243	19.9762	11.0941	29.6227	241.0237
31		357C	Other Digital Equipment	1834.77	16.7755	6.9499	2.6282	1.4596	3.8973	31.7105
32			**Total**	**18992.72**	**151.0672**	**79.9224**	**30.2237**	**15.1092**	**36.9386**	**313.2611**
33	OVER 25 TO 50		VARIABLE							

	A	B	C	D	E	F	G	H	I	J
1	Qwest Default Values 5/30/02 9:43:47 AM						OC3 UDIT/EEL			
2	South Dakota			Investment	Depreciation	Cost of Money	Income Tax	Ad Valorem	Maintenance	Total Capital Costs
3	Acct	FRC	Account Name		cD*(AP p7 cA)/12	cD*(AP p7 cB)/12	cD*(AP p7 cC)/12	cD*(AP p7 cD)/12	cD*(AP p7 cE)/12	sum(cE:cI)
4	OC3 Unbundled Dedicated Interoffice Transport									
5	OVER 0 TO 8		FIXED							
6		20C	Land	101.41	0.0000	0.8155	0.3084	0.0807	0.1079	1.3125
7		110C	Building	5429.85	11.6836	33.8772	12.8111	4.3196	5.7784	68.4700
8		357CS	Other Digital Equipment	26691.88	244.0469	101.1056	38.2345	21.2341	56.6977	461.3188
9		357C	Other Digital Equipment	480.08	4.3894	1.8185	0.6877	0.3819	1.0198	8.2973
10			**Total**	**32703.21**	**260.1199**	**137.6168**	**52.0417**	**26.0163**	**63.6038**	**539.3986**
11	OVER 0 TO 8		VARIABLE							
12		4C	Conduit System	270.48	0.4833	1.4561	0.5506	0.2152	0.1632	2.8684
13		85C	UG Cbl Nonmetallic	120.17	0.7084	0.5664	0.2142	0.0956	0.1893	1.7739
14		845C	Buried Cbl Nonmetallic	2035.29	10.3295	9.6777	3.6598	1.6191	3.9137	29.1998
15			**Total**	**2425.94**	**11.5213**	**11.7002**	**4.4246**	**1.9299**	**4.2662**	**33.8421**
16	OVER 8 TO 25		FIXED							
17		20C	Land	101.41	0.0000	0.8155	0.3084	0.0807	0.1079	1.3125
18		110C	Building	5429.85	11.6836	33.8772	12.8111	4.3196	5.7784	68.4700
19		357CS	Other Digital Equipment	26691.88	244.0469	101.1056	38.2345	21.2341	56.6977	461.3188
20		357C	Other Digital Equipment	480.08	4.3894	1.8185	0.6877	0.3819	1.0198	8.2973
21			**Total**	**32703.21**	**260.1199**	**137.6168**	**52.0417**	**26.0163**	**63.6038**	**539.3986**
22	OVER 8 TO 25		VARIABLE							
23		4C	Conduit System	270.48	0.4833	1.4561	0.5506	0.2152	0.1632	2.8684
24		85C	UG Cbl Nonmetallic	120.17	0.7084	0.5664	0.2142	0.0956	0.1893	1.7739
25		845C	Buried Cbl Nonmetallic	2035.29	10.3295	9.6777	3.6598	1.6191	3.9137	29.1998
26			**Total**	**2425.94**	**11.5213**	**11.7002**	**4.4246**	**1.9299**	**4.2662**	**33.8421**
27	OVER 25 TO 50		FIXED							
28		20C	Land	101.41	0.0000	0.8155	0.3084	0.0807	0.1079	1.3125
29		110C	Building	5429.85	11.6836	33.8772	12.8111	4.3196	5.7784	68.4700
30		357CS	Other Digital Equipment	26691.88	244.0469	101.1056	38.2345	21.2341	56.6977	461.3188
31		357C	Other Digital Equipment	480.08	4.3894	1.8185	0.6877	0.3819	1.0198	8.2973
32			**Total**	**32703.21**	**260.1199**	**137.6168**	**52.0417**	**26.0163**	**63.6038**	**539.3986**
33	OVER 25 TO 50		VARIABLE							

	A	B	C	D	E	F	G	H	I	J
1	Qwest Default Values 5/30/02 9:43:47 AM						OC12 UDIT/EEL			
2	South Dakota			Investment	Depreciation	Cost of Money	Income Tax	Ad Valorem	Maintenance	Total Capital Costs
3	Acct	FRC	Account Name		cD*(AP p7 cA)/12	cD*(AP p7 cB)/12	cD*(AP p7 cC)/12	cD*(AP p7 cD)/12	cD*(AP p7 cE)/12	sum(cE:cI)
4	OC12 Unbundled Dedicated Interoffice Transport									
5	OVER 0 TO 8		FIXED							
6		20C	Land	287.68	0.0000	2.3136	0.8749	0.2289	0.3061	3.7235
7		110C	Building	15404.02	33.1454	96.1069	36.3441	12.2543	16.3929	194.2437
8		357CS	Other Digital Equipment	76131.53	696.0792	288.3770	109.0537	60.5648	161.7153	1315.7900
9		357C	Other Digital Equipment	953.06	8.7139	3.6101	1.3652	0.7582	2.0244	16.4718
10			**Total**	**92776.29**	**737.9386**	**390.4075**	**147.6379**	**73.8061**	**180.4387**	**1530.2289**
11	OVER 0 TO 8		VARIABLE							
12		4C	Conduit System	536.95	0.9595	2.8906	1.0931	0.4272	0.3240	5.6944
13		85C	UG Cbl Nonmetallic	238.56	1.4064	1.1244	0.4252	0.1898	0.3758	3.5215
14		845C	Buried Cbl Nonmetallic	4040.47	20.5062	19.2123	7.2654	3.2143	7.7695	57.9676
15			**Total**	**4815.98**	**22.8720**	**23.2272**	**8.7837**	**3.8312**	**8.4692**	**67.1834**
16	OVER 8 TO 25		FIXED							
17		20C	Land	287.68	0.0000	2.3136	0.8749	0.2289	0.3061	3.7235
18		110C	Building	15404.02	33.1454	96.1069	36.3441	12.2543	16.3929	194.2437
19		357CS	Other Digital Equipment	76131.53	696.0792	288.3770	109.0537	60.5648	161.7153	1315.7900
20		357C	Other Digital Equipment	953.06	8.7139	3.6101	1.3652	0.7582	2.0244	16.4718
21			**Total**	**92776.29**	**737.9386**	**390.4075**	**147.6379**	**73.8061**	**180.4387**	**1530.2289**
22	OVER 8 TO 25		VARIABLE							
23		4C	Conduit System	536.95	0.9595	2.8906	1.0931	0.4272	0.3240	5.6944
24		85C	UG Cbl Nonmetallic	238.56	1.4064	1.1244	0.4252	0.1898	0.3758	3.5215
25		845C	Buried Cbl Nonmetallic	4040.47	20.5062	19.2123	7.2654	3.2143	7.7695	57.9676
26			**Total**	**4815.98**	**22.8720**	**23.2272**	**8.7837**	**3.8312**	**8.4692**	**67.1834**
27	OVER 25 TO 50		FIXED							
28		20C	Land	287.68	0.0000	2.3136	0.8749	0.2289	0.3061	3.7235
29		110C	Building	15404.02	33.1454	96.1069	36.3441	12.2543	16.3929	194.2437
30		357CS	Other Digital Equipment	76131.53	696.0792	288.3770	109.0537	60.5648	161.7153	1315.7900
31		357C	Other Digital Equipment	953.06	8.7139	3.6101	1.3652	0.7582	2.0244	16.4718
32			**Total**	**92776.29**	**737.9386**	**390.4075**	**147.6379**	**73.8061**	**180.4387**	**1530.2289**
33	OVER 25 TO 50		VARIABLE							

	A	B	C	D	E	F	G	H	I	J
1	Qwest Default Values 5/30/02 9:43:47 AM						OC48 UDIT/EEL			
2	South Dakota			Investment	Depreciation	Cost of Money	Income Tax	Ad Valorem	Maintenance	Total Capital Costs
3	Acct	FRC	Account Name		cD*(AP p7 cA)/12	cD*(AP p7 cB)/12	cD*(AP p7 cC)/12	cD*(AP p7 cD)/12	cD*(AP p7 cE)/12	sum(cE:cI)
4	OC48 Unbundled Dedicated Interoffice Transport									
5	OVER 0 TO 8		FIXED							
6		20C	Land	587.43	0.0000	4.7242	1.7865	0.4673	0.6251	7.6032
7		110C	Building	31454.21	67.6812	196.2453	74.2129	25.0227	33.4734	396.6355
8		357CS	Other Digital Equipment	154992.53	1417.1143	587.0928	222.0172	123.3009	329.2284	2678.7536
9		357C	Other Digital Equipment	2410.18	22.0365	9.1295	3.4524	1.9174	5.1196	41.6554
10			**Total**	**189444.34**	**1506.8320**	**797.1918**	**301.4690**	**150.7083**	**368.4465**	**3124.6476**
11	OVER 0 TO 8		VARIABLE							
12		4C	Conduit System	1357.88	2.4264	7.3100	2.7644	1.0802	0.8194	14.4004
13		85C	UG Cbl Nonmetallic	603.30	3.5565	2.8434	1.0753	0.4799	0.9502	8.9054
14		845C	Buried Cbl Nonmetallic	10217.91	51.8580	48.5857	18.3734	8.1286	19.6481	146.5938
15			**Total**	**12179.09**	**57.8409**	**58.7391**	**22.2130**	**9.6888**	**21.4178**	**169.8996**
16	OVER 8 TO 25		FIXED							
17		20C	Land	587.43	0.0000	4.7242	1.7865	0.4673	0.6251	7.6032
18		110C	Building	31454.21	67.6812	196.2453	74.2129	25.0227	33.4734	396.6355
19		357CS	Other Digital Equipment	154992.53	1417.1143	587.0928	222.0172	123.3009	329.2284	2678.7536
20		357C	Other Digital Equipment	2410.18	22.0365	9.1295	3.4524	1.9174	5.1196	41.6554
21			**Total**	**189444.34**	**1506.8320**	**797.1918**	**301.4690**	**150.7083**	**368.4465**	**3124.6476**
22	OVER 8 TO 25		VARIABLE							
23		4C	Conduit System	1357.88	2.4264	7.3100	2.7644	1.0802	0.8194	14.4004

	A	B	C	D	E	F	G	H	I	J
1	Qwest Default Values 5/30/02 9:43:47 AM						**OCN E-UDIT**			
2	South Dakota			**Investment**	**Depreciation**	**Cost of Money**	**Income Tax**	**Ad Valorem**	**Maintenance**	**Total Capital Costs**
3	**Acct**	**FRC**	**Account Name**		**cD*(AP p7 cA)/12**	**cD*(AP p7 cB)/12**	**cD*(AP p7 cC)/12**	**cD*(AP p7 cD)/12**	**cD*(AP p7 cE)/12**	**sum(cE:cI)**
4	**OC3 E-UDIT**									
5	2111	20C	Land	54.711376	0.000000	0.440000	0.166392	0.043524	0.058224	0.708140
6	2121	110C	Building	2929.567451	6.303662	18.277807	6.912003	2.330553	3.117629	36.941654
7	2232.2	257CS	Pair Gain—Digital	14279.247456	130.556778	54.088052	20.454136	11.359541	12.528492	228.987000
8	2232.3	357C	Other Digital Equipment	380.854221	3.482193	1.442629	0.545550	0.302980	0.808994	6.582347
9	2422.12,.22	85C	UG Cbl Nonmetallic	2999.946654	17.685143	14.139111	5.346898	2.386542	4.725114	44.282807
10	2423.12,.22	845C	Buried Cbl Nonmetallic	20396.930518	103.518490	96.986484	36.676765	16.226330	39.221435	292.629503
11	2426.2	862C	Intrabuilding Cbl., Exch., Nonmetallic	79.946870	0.417670	0.388886	0.147062	0.063600	0.118959	1.136177
12	2441	4C	Conduit System	4783.611780	8.547924	25.751834	9.738408	3.805497	2.886757	50.730420
13			**Total**	**45904.816326**	**270.511860**	**211.514802**	**79.987214**	**36.518567**	**63.465604**	**661.998048**
14	**OC12 E-UDIT**									
15	2111	20C	Land	115.386821	0.000000	0.927965	0.350923	0.091793	0.122794	1.493475
16	2121	110C	Building	6178.486046	13.294484	38.548072	14.577480	4.915159	6.575110	77.910304
17	2232.2	257CS	Pair Gain—Digital	30537.441797	279.207292	115.672113	43.742991	24.293390	26.793296	489.709083
18	2232.3	357C	Other Digital Equipment	380.854221	3.482193	1.442629	0.545550	0.302980	0.808994	6.582347
19	2422.12,.22	85C	UG Cbl Nonmetallic	2999.946654	17.685143	14.139111	5.346898	2.386542	4.725114	44.282807
20	2423.12,.22	845C	Buried Cbl Nonmetallic	20396.930518	103.518490	96.986484	36.676765	16.226330	39.221435	292.629503
21	2426.2	862C	Intrabuilding Cbl., Exch., Nonmetallic	79.946870	0.417670	0.388886	0.147062	0.063600	0.118959	1.136177
22	2441	4C	Conduit System	4783.611780	8.547924	25.751834	9.738408	3.805497	2.886757	50.730420
23			**Total**	**65472.604707**	**426.153196**	**293.857093**	**111.126077**	**52.085291**	**81.252459**	**964.474117**
24	**OC48 E-UDIT**									
25	2111	20C	Land	479.156127	0.000000	3.853473	1.457243	0.381182	0.509915	6.201814
26	2121	110C	Building	25656.824698	55.206767	160.074994	60.534547	20.410723	27.303846	323.530878
27	2232.2	257CS	Pair Gain—Digital	128010.679722	1170.416158	484.888877	183.367358	101.836082	112.315499	2052.823973
28	2232.3	357C	Other Digital Equipment	380.854221	3.482193	1.442629	0.545550	0.302980	0.808994	6.582347
29	2422.12,.22	85C	UG Cbl Nonmetallic	2999.946654	17.685143	14.139111	5.346898	2.386542	4.725114	44.282807
30	2423.12,.22	845C	Buried Cbl Nonmetallic	20396.930518	103.518490	96.986484	36.676765	16.226330	39.221435	292.629503
31	2426.2	862C	Intrabuilding Cbl., Exch., Nonmetallic	79.946870	0.417670	0.388886	0.147062	0.063600	0.118959	1.136177
32	2441	4C	Conduit System	4783.611780	8.547924	25.751834	9.738408	3.805497	2.886757	50.730420
33			**Total**	**182787.950590**	**1359.274345**	**787.526288**	**297.813832**	**145.412935**	**187.890520**	**2777.917919**
34	**Investment Sources**									
35	Land = (AP p12 B10) * (377C + 57C+257C+257CS+357C+357CS)						Building = (AP p12 C10) *(377C+57C+257C+257CS+357C+357CS)			
36	All other investments = sK p21 cE									

Section K - Unbundled Dedicated InterofficeTransport
EUDIT Defaults and Overrides

	A	B	C	D	E
1	Qwest Default Values 5/30/02 9:43:47 AM				
2			**E-UDIT**		
3	South Dakota				
4	**Description**	**FRC**	**Default Value**	**Overrides**	**This Run**
5					
6	**OC3 E-UDIT**				
7	CIRCUIT-DIGITAL SONET	257CS	$14,279.25		$14,279.25
8	CIRCUIT-DIGITAL SONET-PREMISES	257CSP			$0.00
9	CONDUIT SYSTEMS	4C	$4,783.61		$4,783.61
10	UNDERGROUND CABLE NONMETALLIC	85C	$2,999.95		$2,999.95
11	BURIED CABLE NONMETALLIC	845C	$20,396.93		$20,396.93
12	INTRABUILDING CABLE NONMETALLIC	862C	$79.95		$79.95
13	OTHER DIGITAL EQUIPMENT	357C	$380.85		$380.85
14	**OC12 E-UDIT**				
15	CIRCUIT-DIGITAL SONET	257CS	$30,537.44		$30,537.44
16	CIRCUIT-DIGITAL SONET-PREMISES	257CSP			$0.00
17	CONDUIT SYSTEMS	4C	$4,783.61		$4,783.61
18	UNDERGROUND CABLE NONMETALLIC	85C	$2,999.95		$2,999.95
19	BURIED CABLE NONMETALLIC	845C	$20,396.93		$20,396.93
20	INTRABUILDING CABLE NONMETALLIC	862C	$79.95		$79.95
21	OTHER DIGITAL EQUIPMENT	357C	$380.85		$380.85
22	**OC48 E-UDIT**				
23	CIRCUIT-DIGITAL SONET	257CS	$128,010.68		$128,010.68
24	CIRCUIT-DIGITAL SONET-PREMISES	257CSP			$0.00
25	CONDUIT SYSTEMS	4C	$4,783.61		$4,783.61
26	UNDERGROUND CABLE NONMETALLIC	85C	$2,999.95		$2,999.95
27	BURIED CABLE NONMETALLIC	845C	$20,396.93		$20,396.93
28	INTRABUILDING CABLE NONMETALLIC	862C	$79.95		$79.95
29	OTHER DIGITAL EQUIPMENT	357C	$380.85		$380.85
30					
31	CIRCUIT-DIGITAL SONET-PREMISES (257CSP) investments are for the Remote Nodes. All				
32	other investments are for the Central Office Nodes.				
33					
34					

	A	B	C	D	E	F
1	Qwest Default Values 5/30/02 9:43:47 AM					South Dakota
2	Mileage Band	Fixed or DISTANCE SENSITIVE	FRC	TOTAL DIRECT	NETWORK SUPPORT	Total Investment
3	Over 0 to 8	Fixed	357CS	118.96	0.00	118.96
4	Over 0 to 8	Fixed	357C	1099.47	1.44	1100.91
5	Over 0 to 8	Variable	357CS	1.29	0.00	1.29
6	Over 0 to 8	Variable	357C	0.30	0.01	0.31
7	Over 0 to 8	Variable	4C	0.90	0.56	1.46
8	Over 0 to 8	Variable	85C	0.40	0.25	0.65
9	Over 0 to 8	Variable	845C	6.70	4.21	10.91
10	Over 8 to 25	Fixed	357CS	118.96	0.00	118.96
11	Over 8 to 25	Fixed	357C	1099.47	1.44	1100.91
12	Over 8 to 25	Variable	357CS	1.29	0.00	1.29
13	Over 8 to 25	Variable	357C	0.30	0.01	0.31
14	Over 8 to 25	Variable	4C	0.90	0.56	1.46
15	Over 8 to 25	Variable	85C	0.40	0.25	0.65
16	Over 8 to 25	Variable	845C	6.70	4.21	10.91
17	Over 25 to 50	Fixed	357CS	118.96	0.00	118.96
18	Over 25 to 50	Fixed	357C	1099.47	1.44	1100.91
19	Over 25 to 50	Variable	357CS	1.29	0.00	1.29
20	Over 25 to 50	Variable	357C	0.30	0.01	0.31
21	Over 25 to 50	Variable	4C	0.90	0.56	1.46
22	Over 25 to 50	Variable	85C	0.40	0.25	0.65
23	Over 25 to 50	Variable	845C	6.70	4.21	10.91
24	Over 50	Fixed	357CS	92.55	0.00	92.55
25	Over 50	Fixed	357C	1100.20	0.63	1100.83
26	Over 50	Variable	357CS	2.15	0.00	2.15
27	Over 50	Variable	357C	0.41	0.01	0.42
28	Over 50	Variable	4C	0.53	0.33	0.86
29	Over 50	Variable	85C	0.23	0.15	0.38
30	Over 50	Variable	845C	3.95	2.48	6.43
31	All	Fixed	357CS	104.76	0.00	104.76
32	All	Fixed	357C	1099.86	1.01	1100.87
33	All	Variable	357CS	2.08	0.00	2.08
34	All	Variable	357C	0.36	0.01	0.37
35	All	Variable	4C	0.56	0.35	0.91
36	All	Variable	85C	0.25	0.16	0.40
37	All	Variable	845C	4.21	2.64	6.85

	A	B	C	D	E	F
1	Qwest Default Values 5/30/02 9:43:47 AM					South Dakota
2	Mileage Band	Fixed or DISTANCE SENSITIVE	FRC	TOTAL DIRECT	NETWORK SUPPORT	Total Investment
3	Over 0 to 8	Fixed	357CS	1311.79	0.00	1311.79
4	Over 0 to 8	Fixed	357C	1440.49	17.70	1458.19
5	Over 0 to 8	Variable	357CS	9.21	0.00	9.21
6	Over 0 to 8	Variable	357C	2.12	0.03	2.15
7	Over 0 to 8	Variable	4C	10.20	6.40	16.61
8	Over 0 to 8	Variable	85C	4.53	2.84	7.38
9	Over 0 to 8	Variable	845C	73.64	46.21	119.85
10	Over 8 to 25	Fixed	357CS	1311.79	0.00	1311.79
11	Over 8 to 25	Fixed	357C	1440.49	17.70	1458.19
12	Over 8 to 25	Variable	357CS	9.21	0.00	9.21
13	Over 8 to 25	Variable	357C	2.12	0.03	2.15
14	Over 8 to 25	Variable	4C	10.20	6.40	16.61
15	Over 8 to 25	Variable	85C	4.53	2.84	7.38
16	Over 8 to 25	Variable	845C	73.64	46.21	119.85
17	Over 25 to 50	Fixed	357CS	1311.79	0.00	1311.79
18	Over 25 to 50	Fixed	357C	1440.49	17.70	1458.19
19	Over 25 to 50	Variable	357CS	9.21	0.00	9.21
20	Over 25 to 50	Variable	357C	2.12	0.03	2.15
21	Over 25 to 50	Variable	4C	10.20	6.40	16.61
22	Over 25 to 50	Variable	85C	4.53	2.84	7.38
23	Over 25 to 50	Variable	845C	73.64	46.21	119.85
24	Over 50	Fixed	357CS	1008.42	0.00	1008.42
25	Over 50	Fixed	357C	1451.58	6.82	1458.40
26	Over 50	Variable	357CS	21.80	0.00	21.80
27	Over 50	Variable	357C	3.94	0.07	4.01
28	Over 50	Variable	4C	4.92	3.09	8.00
29	Over 50	Variable	85C	2.18	1.37	3.56
30	Over 50	Variable	845C	37.01	23.22	60.23
31	All	Fixed	357CS	1091.00	0.00	1091.00
32	All	Fixed	357C	1448.56	9.78	1458.34
33	All	Variable	357CS	21.19	0.00	21.19
34	All	Variable	357C	3.47	0.07	3.54
35	All	Variable	4C	5.03	3.15	8.18
36	All	Variable	85C	2.23	1.40	3.64
37	All	Variable	845C	37.76	23.70	61.46

	A	B	C	D	E	F
1	Qwest Default Values 5/30/02 9:43:47 AM					South Dakota
2	Mileage Band	Fixed or DISTANCE SENSITIVE	FRC	TOTAL DIRECT	NETWORK SUPPORT	Total Investment
3	Over 0 to 8	Fixed	357CS	13945.62	0.00	13945.62
4	Over 0 to 8	Fixed	357C	1669.71	165.06	1834.77
5	Over 0 to 8	Variable	4C	108.37	68.01	176.38
6	Over 0 to 8	Variable	85C	48.15	30.22	78.36
7	Over 0 to 8	Variable	845C	815.47	511.78	1327.24
8	Over 8 to 25	Fixed	357CS	13945.62	0.00	13945.62
9	Over 8 to 25	Fixed	357C	1669.71	165.06	1834.77
10	Over 8 to 25	Variable	4C	108.37	68.01	176.38
11	Over 8 to 25	Variable	85C	48.15	30.22	78.36
12	Over 8 to 25	Variable	845C	815.47	511.78	1327.24
13	Over 25 to 50	Fixed	357CS	13945.62	0.00	13945.62
14	Over 25 to 50	Fixed	357C	1669.71	165.06	1834.77
15	Over 25 to 50	Variable	4C	108.37	68.01	176.38
16	Over 25 to 50	Variable	85C	48.15	30.22	78.36
17	Over 25 to 50	Variable	845C	815.47	511.78	1327.24
18	Over 50	Fixed	357CS	11603.99	0.00	11603.99
19	Over 50	Fixed	357C	1833.99	57.70	1891.69
20	Over 50	Variable	357CS	201.24	0.00	201.24
21	Over 50	Variable	357C	34.96	0.63	35.59
22	Over 50	Variable	4C	41.23	25.87	67.10
23	Over 50	Variable	85C	18.32	11.50	29.81
24	Over 50	Variable	845C	310.23	194.70	504.92
25	All	Fixed	357CS	12273.02	0.00	12273.02
26	All	Fixed	357C	1787.05	88.38	1875.43
27	All	Variable	357CS	173.76	0.00	173.76
28	All	Variable	357C	25.16	0.57	25.73
29	All	Variable	4C	41.68	26.16	67.84
30	All	Variable	85C	18.52	11.62	30.14
31	All	Variable	845C	313.66	196.85	510.50

	A	B	C	D	E	F
1	Qwest Default Values 5/30/02 9:43:47 AM					South Dakota
2	Mileage Band	Fixed or Variable	FRC	TOTAL DIRECT	NETWORK SUPPORT	Total
3	Over 0 to 8	Fixed	357CS	26691.88	0.00	26691.88
4	Over 0 to 8	Fixed	357C	201.66	278.43	480.08
5	Over 0 to 8	Variable	4C	166.18	104.29	270.48
6	Over 0 to 8	Variable	85C	73.83	46.34	120.17
7	Over 0 to 8	Variable	845C	1250.50	784.80	2035.29
8	Over 8 to 25	Fixed	357CS	26691.88	0.00	26691.88
9	Over 8 to 25	Fixed	357C	201.66	278.43	480.08
10	Over 8 to 25	Variable	4C	166.18	104.29	270.48
11	Over 8 to 25	Variable	85C	73.83	46.34	120.17
12	Over 8 to 25	Variable	845C	1250.50	784.80	2035.29
13	Over 25 to 50	Fixed	357CS	26691.88	0.00	26691.88
14	Over 25 to 50	Fixed	357C	201.66	278.43	480.08
15	Over 25 to 50	Variable	4C	166.18	104.29	270.48
16	Over 25 to 50	Variable	85C	73.83	46.34	120.17
17	Over 25 to 50	Variable	845C	1250.50	784.80	2035.29
18	Over 50	Fixed	357CS	26691.88	0.00	26691.88
19	Over 50	Fixed	357C	201.66	278.43	480.08
20	Over 50	Variable	357CS	437.58	0.00	437.58
21	Over 50	Variable	357C	4.62	2.90	7.52
22	Over 50	Variable	4C	194.27	121.92	316.20
23	Over 50	Variable	85C	86.31	54.17	140.48
24	Over 50	Variable	845C	1461.88	917.46	2379.35
25	All	Fixed	357CS	26691.88	0.00	26691.88
26	All	Fixed	357C	201.66	278.43	480.08
27	All	Variable	357CS	434.61	0.00	434.61
28	All	Variable	357C	4.23	2.66	6.89
29	All	Variable	4C	194.08	121.80	315.89
30	All	Variable	85C	86.23	54.12	140.35
31	All	Variable	845C	1460.45	916.56	2377.01

	A	B	C	D	E	F
1	Qwest Default Values 5/30/02 9:43:47 AM					South Dakota
2	Mileage Band	Fixed or Variable	FRC	TOTAL DIRECT	NETWORK SUPPORT	Total
3	Over 0 to 8	Fixed	357CS	76131.53	0.00	76131.53
4	Over 0 to 8	Fixed	357C	400.33	552.73	953.06
5	Over 0 to 8	Variable	4C	329.90	207.04	536.95
6	Over 0 to 8	Variable	85C	146.57	91.99	238.56
7	Over 0 to 8	Variable	845C	2482.49	1557.98	4040.47
8	Over 8 to 25	Fixed	357CS	76131.53	0.00	76131.53
9	Over 8 to 25	Fixed	357C	400.33	552.73	953.06
10	Over 8 to 25	Variable	4C	329.90	207.04	536.95
11	Over 8 to 25	Variable	85C	146.57	91.99	238.56
12	Over 8 to 25	Variable	845C	2482.49	1557.98	4040.47
13	Over 25 to 50	Fixed	357CS	76131.53	0.00	76131.53
14	Over 25 to 50	Fixed	357C	400.33	552.73	953.06
15	Over 25 to 50	Variable	4C	329.90	207.04	536.95
16	Over 25 to 50	Variable	85C	146.57	91.99	238.56
17	Over 25 to 50	Variable	845C	2482.49	1557.98	4040.47
18	Over 50	Fixed	357CS	76131.53	0.00	76131.53
19	Over 50	Fixed	357C	400.33	552.73	953.06
20	Over 50	Variable	357CS	1085.93	0.00	1085.93
21	Over 50	Variable	357C	9.18	5.76	14.94
22	Over 50	Variable	4C	385.67	242.04	627.72
23	Over 50	Variable	85C	171.35	107.54	278.89
24	Over 50	Variable	845C	2902.14	1821.35	4723.49
25	All	Fixed	357CS	76131.53	0.00	76131.53
26	All	Fixed	357C	400.33	552.73	953.06
27	All	Variable	357CS	1078.56	0.00	1078.56
28	All	Variable	357C	8.41	5.28	13.68
29	All	Variable	4C	385.29	241.81	627.10
30	All	Variable	85C	171.18	107.43	278.62
31	All	Variable	845C	2899.29	1819.56	4718.85

	A	B	C	D	E	F
1	Qwest Default Values 5/30/02 9:43:47 AM					South Dakota
2	Mileage Band	Fixed or Variable	FRC	TOTAL DIRECT	NETWORK SUPPORT	Total
3	Over 0 to 8	Fixed	357CS	154992.53	0.00	154992.53
4	Over 0 to 8	Fixed	357C	1012.38	1397.79	2410.18
5	Over 0 to 8	Variable	4C	834.29	523.59	1357.88
6	Over 0 to 8	Variable	85C	370.67	232.63	603.30
7	Over 0 to 8	Variable	845C	6277.94	3939.97	10217.91
8	Over 8 to 25	Fixed	357CS	154992.53	0.00	154992.53
9	Over 8 to 25	Fixed	357C	1012.38	1397.79	2410.18
10	Over 8 to 25	Variable	4C	834.29	523.59	1357.88
11	Over 8 to 25	Variable	85C	370.67	232.63	603.30
12	Over 8 to 25	Variable	845C	6277.94	3939.97	10217.91
13	Over 25 to 50	Fixed	357CS	154992.53	0.00	154992.53
14	Over 25 to 50	Fixed	357C	1012.38	1397.79	2410.18
15	Over 25 to 50	Variable	4C	834.29	523.59	1357.88
16	Over 25 to 50	Variable	85C	370.67	232.63	603.30
17	Over 25 to 50	Variable	845C	6277.94	3939.97	10217.91
18	Over 50	Fixed	357CS	154992.53	0.00	154992.53
19	Over 50	Fixed	357C	1012.38	1397.79	2410.18
20	Over 50	Variable	357CS	2907.29	0.00	2907.29
21	Over 50	Variable	357C	23.21	14.56	37.77
22	Over 50	Variable	4C	975.32	612.10	1587.42
23	Over 50	Variable	85C	433.33	271.95	705.28
24	Over 50	Variable	845C	7339.19	4606.00	11945.19
25	All	Fixed	357CS	154992.53	0.00	154992.53
26	All	Fixed	357C	1012.38	1397.79	2410.18
27	All	Variable	357CS	2887.55	0.00	2887.55
28	All	Variable	357C	21.26	13.34	34.60
29	All	Variable	4C	974.37	611.50	1585.87
30	All	Variable	85C	432.90	271.69	704.59
31	All	Variable	845C	7331.99	4601.47	11933.46

Appendix - Factors, Investment Loadings and ICM Inputs
Expense Factors

	A	B
1	Qwest Default Values 5/30/02 9:43:47 AM	
2		
3	**Factor Description**	***South Dakota***
9		
10	**Product Management Expense**	0.019957
11	**Sales Expense**	0.011877
12	**Product Advertising Expense**	0.000000
13	**Business Fees (Other Operating Taxes)**	0.001483
19	**Network Operations**	0.034832
20	**Network Support Assets**	0.014703
21	**General Support Assets**	0.088742
22	**General Purpose Computers**	0.043342
23	**Uncollectible - Interconnect**	0.003786
24	**Accounting and Finance Expense**	0.007346
25	**Human Resources Expense**	0.008294
26	**Information Management Expense**	0.070887
27	**Intangibles**	0.000000
32		
33	**Executive Expense**	0.011267
34	**Planning Expense**	0.000525
35	**External Relations Expense**	0.037846
36	**Legal Expense**	0.004717
37	**Other Procurement Expense**	0.001860
38	**Research and Development Expense**	0.000006
39	**Other General and Admin Exp**	0.015064

Appendix - Factors, Investment Loadings and ICM Inputs
Expense Factors

Cell: A10
Comment: Product Management Expense Factor
Product Management Expense, account 6611: Product management includes 1) Rate and Tariff - Development which are the costs of providing new or revised tariff offerings, making studies in support of specific dockets and to identify and analyze costs for regulatory activities and 2) Market Forecast - Management Administration and Analysis which are the costs associated with analyzing all forecasts of current and future market conditions, presenting a detailed customer profile, establishing and tracking revenue objectives, as well as performing basic office services. Product management in a interconnect marketplace will be similar to that of the retail market. In fact it will be like the product management that U S WEST performs today in its Carrier market unit which manages wholesale services such as switched and dedicated access products. In this model, U S WEST used the cost of its carrier marketing product management product group. These expenses are also adjusted with cost savings and inflation factors to bring expenses to study year.

Cell: A11
Comment: Sales Expense Factor
Sales Expense, account 6612: Included in this factor are costs incurred with performing sales contact work, servicing and implementation activities for the purpose of selling products and services to accounts in a particular market or segment. Sales expense in a interconnect marketplace will be similar to that of the retail market. In fact it will be like the Sales expense that U S WEST performs today in its Carrier market unit which manages wholesale services such as switched and dedicated access products. In this model U S WEST used the cost of its carrier marketing sales product group. These expenses are also adjusted with cost savings and inflation factors to bring expenses to study year.

Cell: A12
Comment: Product Advertising Expense Factor
Product advertising expense, account 6613: Includes costs incurred in developing and implementing promotional strategies to stimulate the purchase of products and services. This excludes non product related advertising, such as corporate image, stock and bond issue and employment advertisements, which is included in the appropriate functional accounts. Product advertising is not included in U S West's TELRIC studies. Product advertising is avoided for interconnect services and set to zero.

Cell: A13
Comment: The Business Fees factor estimates the expenses associated with other operating taxes. The factor numerator is based on account 7240 (Operating Other Taxes), specifically 7240.2 through 7240.9. The sub accounts of .2 through .9 represent gross receipts taxes, cost of franchises, capital stock taxes, superfund taxes and other taxes. The business fees denominator consists of the sum of the Directly Attributed denominator less the Business Fees numerator.

Business fees is calculated by multiplying the Total Investment Based Costs +Other Direct Expense Inputs + Product Management + Sales Expense + Product Advertising Expense by the Business fees factor.

Cell: A19
Comment: Network Operations
Network Operations: The numerator for this factor is Account 6532, 6534 and 6535.

Account 6532, includes costs incurred in network administration. This includes such activities as controlling traffic flow, administering traffic measuring and monitoring devices, assigning equipment and load balancing, collecting and summarizing traffic data, administering trunking and assigning interoffice facilities and circuit layout work.

Account 6534, includes costs incurred in the general administration of plant operations. This includes supervising plant operations, planning, coordinating and monitoring plant operations; and performing staff work such as developing methods and procedures, preparing and conducting training and coordinating safety programs.

Account 6535, includes costs incurred in the general engineering of the telecommunications plant which are not directly chargeable to an undertaking or project. This includes developing input to the fundamental planning process, performing preliminary work or advance planning in connection with potential undertakings, and performing special studies of an engineering nature.

These expenses are adjusted with cost savings and inflation factors to bring expenses to study year.

Cell: A20
Comment: Network Support Assets
Network Support Assets: Included in this factor are accounts 2112-2116.

Account 2112, Motor Vehicles includes the original cost of motor vehicles of those types which are designed and routinely licensed to operate on public streets and highways.

Account 2113, Aircraft includes the original cost of company owned aircraft and any associated equipment and furnishing installed as an integral part of the aircraft.

Account 2114, Special Purpose Vehicles includes the original cost of special purpose vehicles. Special purpose vehicles are self propelled and are therefore independent upon another vehicle's engine for power.

Account 2115, Garage Work Equipment includes the original cost of tools and equipment used to maintain items included in Accounts 2112, 2113, 2114. Items such as Air compressors, car hoists, garage jacks, gasoline pumps etc.

Account 2116, Other Work Equipment includes the original cost of power operated equipment, general purpose tools and other items of work equipment.

The investment in these accounts are converted to expenses to calculate a factor. This is done by multiplying the investment dollars by an Ad Valorem factor, and Capital Costs (Cost of Money, Income Taxes and Depreciation). These investments were also adjusted by a Current Cost to Book Cost ratio and TPI's, to bring expenses to study year.

Cell: A21
Comment: General Support Assets
General Support Assets: Included in this factor are accounts 2111, 2121-23,1220, 2681.1,.9, 2682.1.

Account 2111, Land includes the original cost of all land held in fee and of easements, and similar rights in land having a term of more than one year used for purposes other than the location of outside plant or externally mounted central office equipment.

Account 2121, Buildings includes the original cost of buildings, and the cost of all permanent fixtures, machinery, appurtenances and appliances installed as a part thereof. It shall include costs incident to the construction or purchase of a building and to securing possession and title.

Account 2123, Office Equipment includes the original cost of office equipment in offices, shops and all other quarters. Account 1220, Inventories includes the cost of material and supplies held in stock and inventories of goods held for resale or lease.

Account 2681.1,9, Land and Buildings and Other are: amounts recorded in this account at the inception of a capital lease shall be equal to the original cost, if known, or to the present value not to exceed fair value, at the beginning of the lease term, of minimum lease payments during the lease term, excluding that portion of the payments representing executory costs to be paid by the lessor, together with any profit thereon.

Account 2682.1, Land & Buildings, this account shall include the original cost of lease hold improvements made to telecommunications plant held under a capital or operating lease, which are subject to amortization treatment. The investment in these accounts are converted to expenses to calculate a factor. This is done by multiplying the investment dollars by an Ad Valorem factor, and Capital Costs (Cost of Money, Income Taxes and Depreciation) where applicable. These investments were also adjusted by a Current Cost to Book Cost ratio and TPI's, to bring expenses to study

Cell: A22
Comment: General Purpose Computers
General Purpose Computers: Included in this factor are accounts 2124, 2681.3 & 4 and 2682.2.

Account 2124, General Purpose Computers includes the original cost of computers and peripheral devices which are designed to perform general administrative information processing activities.

Account 2681.3 & 4 Computers and Computer Software Capital leases, includes the amounts recorded in this account at the inception of a capital lease shall be equal to the original cost, if known, or to the present value not to exceed fair value, at the beginning of the lease term, of minimum lease payments during the lease term, excluding that portion of the payments representing executory costs to be paid by the lessor, together with any profit thereon.

Account 2682.2 Computer Leasehold Improvements, this account shall include the original cost of lease hold improvements made to telecommunications plant held under a capital or operating lease, which are subject to amortization treatment. The investment in these accounts are converted to expenses to calculate a factor. This is done by multiplying the investment dollars by an Ad Valorem factor, and Capital Costs (Cost of Money, Income Taxes and Depreciation) where applicable. These investments were also adjusted by a Current Cost to Book Cost ratio and TPI's, to bring expenses to study year where applicable.

Cell: A23
Comment: Uncollectible - Interconnect
Uncollectible - Interconnect: included in this factor is Account 5301.4 & .5 and Account 5302.

Account 5301.4 Interstate - Carrier Access Services (Uncollectibles) include the accruals to the reserve to provide for the write-offs of uncollectible interstate operating revenues arising from CABS services.

Account 5301.5 Intrastate - Carrier Access Services (Uncollectibles) include the accruals to the reserve for the write-offs of uncollectible intrastate operating revenues arising from CABS services.

Account 5302 Uncollectible Revenue - Other this account shall be charged with amounts concurrently credited to account 1190, Other Accounts Receivable, or to Account 1191, Accounts Receivable Allowance - Other, when such allowance is maintained.

Cell: A24
Comment: Accounting and Finance Expense
Accounting and Finance Expense: Included in this factor is Account 6721, Accounting and Finance Expense. This includes the costs incurred in providing accounting and financial services. These expenses are also adjusted with cost savings and inflation factors to bring expenses to study year.

Cell: A25
Comment: Human Resources Expense
Human Resources Expense: Included in this factor is Account 6723, Human Resources Expense. This includes the costs incurred in performing personnel administration activities such as Equal Employment

Opportunity and Affirmative Action Programs, General Employment Services, Employee data for forecasting, planning and reporting etc. These expenses are also adjusted with cost savings and inflation factors to bring expenses to study year.

Cell: A26
Comment: Information Management Expense
Information Management Expense, account 6724: Included in this factor are costs incurred in planning, developing, testing, implementing and maintaining data bases and application systems for general purpose computers. These expenses are also adjusted with cost savings and inflation factors to bring expenses to study year.

Cell: A27
Comment: Intangibles
Intangibles, Account 2690: Includes the cost of organizing and incorporating the company, the original cost of government franchise, the original cost of patent rights, and other intangible property having a life of more than one year and uses in connection with the company's telecommunications. The investment in this account is converted to expense to calculate the factor. This is done by multiplying the investment dollars by Cost of Money & Income Tax factors. These expenses are also adjusted with inflation factors to bring expenses to study year.

Cell: A33
Comment: Executive Expense
Executive Expense, account 6711: Included in this numerator is executive expense which shall include costs incurred in formulating corporate policy and in providing overall administration and management. These expenses are also adjusted with cost savings and inflation factors to bring expenses to study year.

Cell: A34
Comment: Planning Expense
Planning Expense, account 6712: Included in this factor are costs incurred in developing and evaluating long-term courses of action for the future operations of the Company. This includes performing corporate organization and integrated long-range planning, including management studies, options and contingency plans, and economic strategic analysis. These expenses are also adjusted with cost savings and inflation factors to bring expenses to study year.

Cell: A35
Comment: External Relations Expense
External Relations Expense, account 6722: Included in this factor are costs incurred in maintaining relations with government, regulators, other companies and the general public. These expenses are also adjusted with cost savings and inflation factors to bring expenses to study year.

Cell: A36
Comment: Legal Expense
Legal Expense, account 6725: Included in this factor are costs incurred in providing legal services. This includes conducting and coordinating litigation, providing guidance on regulatory and labor matters, preparing, reviewing and filing patents and contracts and interpreting legislation. These expenses are also adjusted with cost savings and inflation factors to bring expenses to study year.

Cell: A37
Comment: Other Procurement Expense

Other Procurement Expense, account 6726: Included in this factor are costs incurred in procuring material and supplies, including office supplies. These expenses are also adjusted with cost savings and inflation factors to bring expenses to study year.

Cell: A38
Comment: Research and Development Expense
Research and Development Expense, account 6727: Included in this factor are costs incurred in making planned search or critical investigation aimed at discovery of new knowledge. These expenses are also adjusted with cost savings and inflation factors to bring expenses to study year.

Cell: A39
Comment: Other General and Administrative Expenses
Other General and Administrative Expenses, account 6728: Included in this factor are costs incurred in performing general administrative activities not directly charged to the user, and not provided for in other accounts. This includes providing general reference libraries, food services, archives, general security investigation services, operating official private branch exchanges in the conduct of the business and telecommunications and mail services. These expenses are also adjusted with cost savings and inflation factors to bring expenses to study year.

Appendix - Factors, Investment Loadings and ICM Inputs
Investment Based Factors

CAPCOST FACTORS

Qwest Default Values 5/30/02 9:43:47 AM

Cost_of_Money	0.1014	PreTax COM	0.13984615		**State: South Dakota**
Cost_of_Debt	0.075	PostTax COM	0.0909		
Debt_Ratio	0.4				
Discount_Rate	0.1014				

Acct	FRC	Account Name	Depreciation A	Cost of Money B	Income Tax C	Total CAPCOST D	Ad Valorem E	Maintenance F
2111	20C	Land	0.000000	0.096506	0.036495	0.133002	0.009546	0.012770
2212	164C	Motor Vehicles	0.111497	0.049522	0.018727	0.179746	0.009546	
2112	1364C	Aircraft	0.000000	0.000000	0.000000	0.000000	0.009546	
2114	464C	Spec. Purpose Vehicles	0.064286	0.054508	0.020613	0.139407	0.009546	
2115	264C	Garage Work Equipment	0.071429	0.052772	0.019956	0.144156	0.009546	
2116	564C	Other Work Equipment	0.065714	0.054161	0.020482	0.140357	0.009546	
2121	110C	Building	0.025821	0.074869	0.028313	0.129003	0.009546	0.012770
2122	161C	Furniture	0.075688	0.049290	0.018640	0.143619	0.009546	
2123	261C	Office Equipment	0.107909	0.050794	0.019208	0.177912	0.009546	
2124	361C	General Purpose Comp.	0.164850	0.047620	0.018008	0.230478	0.009546	
2212	377C	Digital Switch	0.108910	0.045445	0.017186	0.171541	0.009546	0.010018
2220	117C	Operator Systems	0.127964	0.045130	0.017067	0.190161	0.009546	0.022890
2231	67C	Radio Microwave	0.107035	0.052004	0.019666	0.178705	0.009546	0.005064
2232.1	157C	Digital Data System	0.101968	0.044769	0.016930	0.163666	0.009546	0.006136
2232.2	257C	Pair Gain—Digital	0.109717	0.045455	0.017189	0.172361	0.009546	0.010529
2232.2	257CS	Pair Gain—Digital	0.109717	0.045455	0.017189	0.172361	0.009546	0.010529
2232.2	257CSP	Pair Gain—Digital	0.109717	0.045455	0.017189	0.172361	0.009546	0.010529
2232.3	357C	Other Digital Equipment	0.109717	0.045455	0.017189	0.172361	0.009546	0.025490
2232.3	357CS	Other Digital Equipment	0.109717	0.045455	0.017189	0.172361	0.009546	0.025490
2232.4	457C	Pair Gain—Analog	0.160932	0.045151	0.017075	0.223158	0.009546	0.035518
2232.5	57C	Other Analog Equipment	0.160932	0.045151	0.017075	0.223158	0.009546	0.014015
2351	188C	Public Telephones	0.118750	0.056788	0.021475	0.197013	0.009546	-
2362	858C	Chan. Term. Eq.	0.131250	0.052536	0.019867	0.203653	0.009546	0.018844
2411	1C	Poles	0.122572	0.036893	0.013952	0.173417	0.009546	0.002946
2421.11,.21	52C	Aerial Cbl Metallic	0.105201	0.054376	0.020563	0.180141	0.009546	0.111075
2421.11	42C	Aerial Drop	0.105201	0.054376	0.020563	0.180141	0.009546	0.111075
2421.12,.22	852C	Aerial Cbl Nonmetallic	0.082636	0.054888	0.020757	0.158281	0.009546	0.005464
2422.11,.21	5C	UG Cbl Metallic	0.090987	0.056203	0.021254	0.168443	0.009546	0.030615
2422.12,.22	85C	UG Cbl Nonmetallic	0.070742	0.056557	0.021388	0.148687	0.009546	0.018901
2423.11,.21	45C	Buried Cbl Metallic	0.060902	0.057059	0.021578	0.139540	0.009546	0.052623
2423.11	35C	Buried Drop	0.060902	0.057059	0.021578	0.139540	0.009546	0.052623
2423.12,.22	845C	Buried Cbl Nonmetallic	0.060902	0.057059	0.021578	0.139540	0.009546	0.023075
2424.11,.21	6C	Submarine Cbl., Exch., Metallic	0.053220	0.058893	0.022271	0.134384	0.009546	0.017836
2424.12,.22	86C	Submarine Cbl., Exch., Nonmetallic	0.053220	0.058893	0.022271	0.134384	0.009546	0.017836
2426.1	62C	Intrabuilding Cbl., Exch., Metallic	0.062692	0.058372	0.022074	0.143138	0.009546	0.035119
2426.2	862C	Intrabuilding Cbl., Exch., Nonmetallic	0.062692	0.058372	0.022074	0.143138	0.009546	0.017856
2431	3C	Aerial Wire	0.274000	0.091689	0.034674	0.400363	0.009546	0.024483
2441	4C	Conduit System	0.021443	0.064600	0.024429	0.110473	0.009546	0.007242

Appendix - Factors, Investment Loadings and ICM Inputs
Investment Based Factors

Cell: D7

Comment: Depreciation

Two types of depreciation are involved in the determination of recurring capital costs - book depreciation and tax depreciation. Book depreciation is the repayment of invested capital and is a direct component of capital costs. On the other hand, tax depreciation is not a component of capital cost, but is a schedule of expense deductions used in determining income tax expense. Both depreciation amounts must be separately calculated because most likely, they will differ in timing and amount.

Book depreciation amounts are determined by: (1) total investment, less net salvage, in assets: and (2) estimated life characteristics. The life characteristics are average economic life and survivor shape that are either anticipated or actually experienced at U S West Communications. Several methods are available to calculate book depreciation, however at U S West Communications, the straight-line equal-life group (ELG) method is applied. For service costs studies, ELG allows the depreciation amounts per unit to be "deaveraged" within each vintage of a category.

Tax depreciation is of interest because of its effect on income taxes. Tax depreciation is calculated separately from book depreciation because amounts and timing will differ from book depreciation. This is because, for example, income tax regulations permit using accelerated tax depreciation on most new investments. With accelerated tax depreciation, tax deduction amounts are claimed in greater amounts during the earlier years of an asset's life than during the later years.

To summarize, book depreciation repays capital and is a component cost; whereas, tax depreciation determines the expense deduction used in determining income tax liability.

Cell: E7

Comment: Post Tax Income (Return) (Cost Of Money)

Although invested capital can be repaid in various ways over its life, the capital repayment required will always be the same. However, the cost for the use of this capital varies directly with the time it takes to pay it back. An analogous situation for individuals would be the interest costs on the remaining balance of a home mortgage, which depend on the length of the mortgage. For example, more total interest is paid on a 30-year mortgage than on a mortgage lasting 25 years.

In cost studies, these interest costs are the return owed the investors for the use of their capital, and the company would need to pay this return until capital is fully repaid. The sum of the capital repayment and the associated return is called the capital recovery cost. Of course, in actual practice, investors are partially paid back directly (dividends), and the remaining capital repayment (retained earnings) is reinvested in new plant on behalf of them.

Because the assumed rate is the interest cost of an investment, it is often called the cost of money. And this cost of money is really a composite of the different returns for debt and equity capital. The proportion of debt and equity in the company's capital structure is therefore expressed as the debt ratio, and is used to calculate the composite cost of money as follows:

COMPOSITE COST OF MONEY = (DEBT RATIO X % COST OF DEBT)+(EQUITY RATIO X % COST OF EQUITY)

WHERE; EQUITY RATIO = (1-DEBT RATIO)

The composite cost of money is then used to calculate a schedule of equal payments made over time to repay both capitalized amounts, and a return amount to the investor. Even though each payment is the same, the apportionment between repayment of invested capital and return to the investor changes. The share representing invested capital repaid increases with each payment, and therefore, return to the investor decreases with each payment. Likewise, the principle portion of a home mortgage monthly payment increases each month, and the interest portion declines, even though, the total monthly payment remains the same.

Appendix - Factors, Investment Loadings and ICM Inputs
Investment Based Factors

The amount of money representing the return to the investors is called Post Tax Income. The title "post tax income" is somewhat of a misnomer however, since only return on equity is truly post tax income; return on debt is applied as a reduction to revenue thereby reducing taxable income used to compute income tax expense.

Cell: F7
Comment: Income Tax Expense
Along with capital repayment and return, income taxes are incurred on the return required for the equity portion of the capital. Income taxes are involved because federal and state tax regulations provide for taxing remaining income after payment of operations costs and other deductible amounts. These income taxes are then a portion of the revenue required to meet the capital costs of the undertaking.

Income tax expense does not reflect the actual taxes U S West pays; but instead, it represents the taxes that are reported as paid on the income statement. The difference between the income tax expense and the taxes owed (paid) is due to the treatment of accelerated depreciation.

Cell: G7
Comment: Total Capital Costs
In summary, total capital costs consist of three components: capital repayment (depreciation), return (post tax income) and income tax expense. The sum of the first two components, depreciation and post tax income, has been defined as capital recovery. The present worth of the capital costs is therefore the sum of the present worth of the capital recovery costs and the present worth of the tax expenses.

Cell: H7
C .ment: The Ad Valorem Tax Factor is used to provide an estimate of the Ad Valorem tax costs that are associated with investments. It was developed for use in estimating the total operating expense associated with central office equipment. public coin equipment, and outside plant equipment. The data sources utilized for this are (numerator) Account 7240.1 Property Taxes and (denominator) Account 2001 Total Telephone Plant in Service.

Cell: I7
Comment: There are 23 maintenance factors. Each of these maintenance factors are developed on a state by state basis using expenses and investments relative to the account under study.

Maintenance factors are developed by taking the adjusted levels of 'M' expense dollars and dividing them by adjusted investment associated with a particular account. Power, subscriber line testing and trunk testing factors are added to most accounts to get the final maintenance factor. Maintenance expense is calculated by multiplying the maintenance factor times total investment for an account under study.

Appendix - Factors, Investment Loadings and ICM Inputs
Billing

	A	B	C	D	E	F
1	BASIC SERVICE: U S WEST COST RESULTS FOR MODEL INPUT					
2	FACTORS INCLUDED: NONE					
3	STUDY YEAR: 2000 - USW					
4	MINUTE OF USE - IABS (LIS SWITCHING AND PORTS)					
5						
6	Unit: Minute of Use					MOU
7						
8	TOTAL					
9		INVESTMENT				$0.000111
10		EXPENSE				$0.000277
11						
12						
13	BILLING AND COLLECTION: U S WEST COST RESULTS FOR MODEL INPUT					
14	FACTORS INCLUDED: NONE					
15	STUDY YEAR: 2000 - USW WHOLESALE					
16	ACCOUNT - CRIS (LIS - LINK AND SPNP)					
17						
18	Unit: Per Electronically Billed Line					ACCOUNT
19						
20	TOTAL					
21		INVESTMENT				$0.000112
22		EXPENSE				$0.016467
23						
24						
35						
36	BILLING AND COLLECTION: U S WEST COST RESULTS FOR MODEL INPUT					
37	FACTORS INCLUDED: NONE					
38	STUDY YEAR: 2000 - USW					
39	FACTOR DEVELOPMENT - IABS (LIS DEDICATED, COLOCATION, EICT)					
40						
41	Unit: Factor					0.004304
42						
43	MESSAGE TOLL SERVICE: U S WEST COST RESULTS FOR MODEL INPUT					
44	FACTORS INCLUDED: NONE					
45	STUDY YEAR: 2000 - USW WHOLESALE					
46	MTS - CRIS (DA AND OPR. SVCS.)					
47						
48	Class of Service: MTS per Message					ACCOUNT
49						
50	TOTAL					
51		INVESTMENT				$0.000095
52		EXPENSE				$0.014184
53						
54						
55	Sheet Updated on 2/2/2001					

Appendix - Factors, Investment Loadings and ICM Inputs
Billing

Cell: A6
Comment: Per Minute is based on originating plus terminating end office switching minutes.

Appendix - Factors, Investment Loadings and ICM Inputs
L & B Factors

	A	B	C	D	E
1	Qwest Default Values 5/30/02 9:43:47 AM				
2	CENTRAL OFFICE LAND AND BUILDING				
3					
4	Calculated in Expense Factors Module				
5					
6					
7					
8		Land Factor	Building Factor		
9					
10	South Dakota	**0.003732**	**0.199833**		

Appendix - Factors, Investment Loadings and ICM Inputs
Investment Loadings

2001 Investment Loadings

Not calculated in model

	Power	Sales Tax	Telco Engineering	Interest During Construction	Total Loading Factor
	A	B	C	D	E=((1+A)*(1+B)*(1+C))/(1-D)
South Dakota	0.0697	0.0564	0.1105	0.0061	**1.2626**

These Investment Loadings are defined in the Investment Loading Factors Technical Description (Loadings.pdf)

Appendix - Factors, Investment Loadings and ICM Inputs
Investment Loadings

Cell: B4
Comment: The purpose the Power and Miscellaneous Equipment factor is to estimate the investment in power plant required to provide back-up power for central office equipment, and to estimate any miscellaneous equipment investment not included in the Engineered, Furnished and Installed (EF&I) investment (i.e., tools, ladders, miscellaneous frames and portable generators).

Cell: C4
Comment: The purpose of the sales tax factor is to provide an estimate of the sales tax costs that are associated with investments. The factor can be used, in conjunction with other factors and data, to develop total installed investment.

Cell: D4
Comment: The purpose of the Telco Engineering Factor is to estimate the U S WEST Communications labor costs, over and above the engineered, furnished and installed (EF&I) costs, which are capitalized as part of central office (CO) equipment installation.

Cell: E4
Comment: The Interest During Construction (IDC) factor is used to estimate the interest that accrues during the time plant is under construction. It is, in effect, the Prime Rate (Rate of Return in state of Colorado) applied to the plant under construction and accounts for the return needed from the time of asset acquisition to the provisioning of service.

Appendix - Factors, Investment Loadings and ICM Inputs

Run Data

	A	B	C
1	Qwest Default Values 5/30/02 9:43:47 AM		
2			**Run_Name**
3	Run Name		Qwest Default Values 5/30/02 9:43:47 AM
4	Version		2.3
5			**State**
6	State		South Dakota
7			**Zone_Type**
8	Zone Type		MSA
19	Study ID		6466
20		**Local Usage**	
21	**Description**		**Run Data**
22			
23			**Usage**
24	Average_Hold_Time		2.582066288
25	Billing_and_Collection_Investment		0.00011100
26	Billing_and_Collection_Direct_Expenses		0.00027700
27	Intercept_Direct_Expenses		0.00001600
28	HP_Measurement_Investments		0.00035400
29	HP_Measurement_Expenses		0.00005000
30	AMA_Investments		0.00361644
31			
32		**Unbundled Loop**	
33	**Description**		**Run Data**
34			**Loop**
35	Unbundled Loop Grooming Investment		$60.32
36	Loop Billing and Collection Expense		$0.016467
37			
38		**DS1**	
39	**Description**	**FRC**	**Run Data**
40	**DS1 Entrance Facility/E-UDIT with Customer Location Electronics Investments**		**DS1_Entrance_Facility**
41	CIRCUIT-OTHER DIGITAL	357C	$472.48
42	CIRCUIT-SUB PAIR GAIN-DIGITAL	257C	$1,188.33
43	CIRCUIT-SUB PAIR GAIN-DIGITAL	257CP	$482.42
44	CIRCUIT-SUB PAIR GAIN-DIGITAL	257CS	$414.18
45	CIRCUIT-SUB PAIR GAIN-DIGITAL	257CSP	$642.65
46	POLES	1C	$27.80
47	C WIRE	3C	$3.60
48	CONDUIT SYSTEMS	4C	$178.51
49	UNDERGROUND CABLE METALLIC	5C	$55.92
50	BURIED DROP	35C	$116.68
51	AERIAL DROP	42C	$18.48
52	BURIED CABLE METALLIC	45C	$818.37
53	AERIAL CABLE METALLIC	52C	$29.34
54	INTRABUILDING CABLE METALLIC	62C	$19.12
55	UNDERGROUND CABLE NONMETALLIC	85C	$144.24
56	BURIED CABLE NONMETALLIC	845C	$822.92
57	INTRABUILDING CABLE NONMETALLIC	862C	$2.06
58	**MULTIPLEXING DS1 TO DSO**	257C	$11,352.08
59			
60		**DS3**	
61	**Description**	**FRC**	**Run Data**
62	**DS3 Entrance Facility/E-UDIT with Customer Location Electronics Investments**		**DS3_Entrance_Facility**
63	CIRCUIT-OTHER DIGITAL	357C	$1,798.67
64	CIRCUIT-DIGITAL	257C	$166.43
65	CIRCUIT-DIGITAL SONET	257CS	$4,845.65
66	CIRCUIT-DIGITAL-PREMISES	257CP	$79.16
67	CIRCUIT-DIGITAL SONET-PREMISES	257CSP	$9,398.15
68	POLES	1C	$0.00
69	CONDUIT SYSTEMS	4C	$1,188.68
70	UNDERGROUND CABLE METALLIC	5C	$0.00
71	BURIED DROP	35C	$0.00
72	AERIAL DROP	42C	$0.00
73	BURIED CABLE METALLIC	45C	$0.00
74	AERIAL CABLE METALLIC	52C	$0.00
75	INTRABUILDING CABLE METALLIC	62C	$0.00
76	UNDERGROUND CABLE NONMETALLIC	85C	$599.67
77	BURIED CABLE NONMETALLIC	845C	$5,283.54
78	INTRABUILDING CABLE NONMETALLIC	862C	$24.71
79	**MULTIPLEXING DS3 TO DS1**	257C	$12,923.28

Appendix - Factors, Investment Loadings and ICM Inputs

Run Data

	A	B	C
1	Qwest Default Values 5/30/02 9:43:47 AM		
80			
81		**Analog Line Port**	
82			**Port**
83	BRI Capital lease period - Years		10
84	BRI SW 1 Capital Lease Expense / Port		100
85	BRI SW 2 Capital Lease Expense / Port		150
86	ISDN BRI Number of SW1 ISDN EO w/X.75 Links		12
87	ISDN BRI Number of SW2 ISDN EO w/X.75 Links		0
88	ISDN BRI Number of ISDN Digipac Switches		2
89	ISDN BRI % Digipac Traffic Originating from ISDN		10%
90	ISDN BRI DS1s per Packet Switch Link		1
91	ISDN BRI Number of Links between Packet Switches		1
92	ISDN BRI Average Mileage between End Offices and DACS		76.62
93	ISDN BRI Average Mileage between Packet Switches		326.2
94	ISDN BRI Number of Trunk Ports per Packet Switch		2
95	ISDN BRI SW1 x.75 End Office DS1 Port Investment	$	8,719.53
96	ISDN BRI SW2 x.75 End Office DS1 Port Investment	$	8,396.30
97	ISDN BRI X.75 Digipac Port (Incoming or Outgoing) Investment	$	19,124.62
98	DS0 Analog Trunk Equipment Utilization Factor		73.23%
99	% Analog DID Trunk Ports		0.42%
100	Investment for DSX-1 Cross-Connect Panel For DID Trunk Port	$	17.49

Appendix - Factors, Investment Loadings and ICM Inputs

Run Data

	A	B	C	
1	Qwest Default Values 5/30/02 9:43:47 AM			
158				
177		**Shared Transport**		
178				**ST**
179	Miles (Default is from SLUS)			7.61
180	End Office to End Office Weighting			54.46%
181	End Office to Local Tandem Weighting			8.62%
182	End Office to Access Tandem Weighting			36.92%
183				
184	All Values are based on Default or Overrides entered by the user			
185				
186		**OCN E-UDIT**		
223				
224	**OC3 E-UDIT**		OC3EUDIT	
225	CIRCUIT-DIGITAL SONET	257CS		$14,279.25
226	CIRCUIT-DIGITAL SONET-PREMISES	257CSP		$0.00
227	CONDUIT SYSTEMS	4C		$4,783.61
228	UNDERGROUND CABLE NONMETALLIC	85C		$2,999.95
229	BURIED CABLE NONMETALLIC	845C		$20,396.93
230	INTRABUILDING CABLE NONMETALLIC	862C		$79.95
231	OTHER DIGITAL EQUIPMENT	357C		$380.85
232	**OC12 E-UDIT**		OC12EUDIT	
233	CIRCUIT-DIGITAL SONET	257CS		$30,537.44
234	CIRCUIT-DIGITAL SONET-PREMISES	257CSP		$0.00
235	CONDUIT SYSTEMS	4C		$4,783.61
236	UNDERGROUND CABLE NONMETALLIC	85C		$2,999.95
237	BURIED CABLE NONMETALLIC	845C		$20,396.93
238	INTRABUILDING CABLE NONMETALLIC	862C		$79.95
239	OTHER DIGITAL EQUIPMENT	357C		$380.85
240	**OC48 E-UDIT**		OC48EUDIT	
241	CIRCUIT-DIGITAL SONET	257CS		$128,010.68
242	CIRCUIT-DIGITAL SONET-PREMISES	257CSP		$0.00
243	CONDUIT SYSTEMS	4C		$4,783.61
244	UNDERGROUND CABLE NONMETALLIC	85C		$2,999.95
245	BURIED CABLE NONMETALLIC	845C		$20,396.93
246	INTRABUILDING CABLE NONMETALLIC	862C		$79.95

CONTINUATION

[90]



Collocation: Remote Terminal

SOUTH DAKOTA
June 2002

Study ID: 6503

QWEST CORPORATION
Policy and Law

Table of Contents

	Page
I. Executive Summary	3
A. Purpose Scope, and Application	3
B. Description of Service	3
C. Study Methodology	3
D. Description of Long Run Incremental Cos	4
E. Study Assumptions	4
II. Rate Elements	5
III. Work Papers	6
Study Summary	6
Inputs	7
Cost Summary	9
FDI Augment	13
DA Hotel Cabling	14
DA Hotel: Vendor A	16
DA Hotel: Vendor B	18
WCP Recurring	20
WCP Maintenance	21
WCP Non-Recurring	22
Input Configurations	23

Executive Summary

A. PURPOSE, SCOPE, AND APPLICATION

The purpose of this study is to determine the expenses and recurring costs that will be incurred by Qwest to provide Remote Terminal Collocation for customers.

This study develops Qwest average costs. Costs are based on a per unit basis depending upon which element is being requested.

B. DESCRIPTION OF SERVICE

Remote Terminal Collocation offers space in available remote cabinets eliminating the distance constraints on DSL providers. The space rate element is unitized on a Standard Mounting Unit (SMU) level and includes access to AC/DC power, heat dissipation and terminations to the Feeder Distribution Interface (FDI). The FDI termination rate element is per 25-pairs and includes the termination blocks and cables.

Cost Elements

- **Space** (per standard mounting unit; 1.75 vertical inches)
This non-recurring rate is associated with the cabinet space and includes the cost of the cabinet and all of the work and materials associated with placement of the cabinet. The recurring rate associated with the Space recovers the maintenance of the materials and equipment associated the cabinet along with a portion of the costs required for the power pedestal.

- **Feeder Distribution Interface (FDI) Terminations** (per 25 pair)
This non-recurring rate includes all costs associated with initial FDI upgrade work required to provide the terminations requested at the FDI. The recurring rate associated with the FDI recovers the maintenance of the cable between the FDI and the Remote Collocation cabinet, as well as, the maintenance of the terminations at the FDI. These charges will apply for both DS0 and DS1.

- Virtual Flat Charge - This non-recurring rate element includes the service order and followup time necessary for each CLEC request for installation, maintenance, etc.

- Virtual Engineering Labor Rate - (per half hour) This non-recurring rate element that provides the planning and engineering of CLEC virtually collocated equipment at the time of installation, change or removal.

- Virtual Maintenance Labor Rate - (per half hour) This non-recurring rate element that provides for the labor necessary for repair of out of service and/or service-affecting conditions and preventive maintenance of virtually collocated equipment.

- Virtual Installation Labor Rate - (per half hour) This non-recurring rate element provides for the installation, change or removal of CLEC virtually collocated equipment.

- Virtual Training Labor Rate - (per half hour) This non-recurring rate element that provides for the training of Qwest personnel on a metropolitan service area basis provided by the vendor of CLEC's virtually collocated equipment when that equipment is different from Qwest-provided equipment.

C. STUDY METHODOLOGY

The costs were developed from material, engineering and installation labor costs provided by Subject Matter Experts (SME's) in Central Office Engineering and Outside Plant Engineering.

Monthly maintenance costs were developed by taking the element-specific expense and applying the account code specific maintenance factor.

The investments/expenses from the above items were then entered into the WCP (Wholesale Cost Program) model, developed and used within Qwest.

D. DESCRIPTION OF LONG RUN INCREMENTAL COSTS

Long Run Incremental Cost (LRIC) is the method Qwest uses to estimate product and service costs. It provides a measurement of costs over a period of time long enough to fully adjust to changes of output (including changes in the size of facilities, levels of investment, etc.) in order to optimally accommodate this change. This methodology is forward looking in nature (i.e. LRIC uses the latest technology costs or replacement costs.) Since LRIC is forward looking, it does *not* measure historic investment decisions of the corporation.

The Qwest LRIC format disaggregates the cost results on a unitized basis into the components shown below:

Total Service Long Run Incremental Cost (TSLRIC) --Total Service Long Run Incremental Cost is the forward looking cost avoided (or added) by discontinuing (or offering) an entire service or group of services in the most efficient manner, holding constant the production of all other services produced by the firm. This cost is often referred to in economic terms as direct cost.

Shared Cost (SC)-- The cost associated with the provision of multiple services (service family). This cost is not volume sensitive and is eliminated only if the entire service family is discontinued.

Total Service Long Run Incremental Costs plus Shared Costs (TSLRIC+SC)--The Total Service Long Run Incremental Costs for a service plus the Shared Costs of a family of services.

Total Element Long Run Incremental Cost (TELRIC) -- Total Element Long Run Incremental Cost, as defined by the Federal Communications Commission, is the sum of the forward looking direct cost incurred in the production of a network element (as opposed to an entire service), attributed costs considered as shared cost under TSLRIC terminology and selected administrative costs considered as common under TSLRIC terminology.

Common Cost (CC)

For **TSLRIC** purposes, common costs are the current cost incurred for the benefit of the enterprise as a whole. This cost does not vary with the provision of a service or a service family. These costs are sometimes referred to as *general overhead costs.* The Common Cost added to the TSLRIC + SC produces a **Fully Allocated Cost (FAC)** as required by Commission rules.

For **TELRIC** purposes, common costs are the current cost incurred for the benefit of the enterprise as a whole, after those cost that vary with the provisioning of individual network elements are removed. The costs removed from common for TELRIC purposes are included in the TELRIC itself. **Total Long Run Incremental Cost plus TELRIC common costs (TELRIC + CC)** form the basis for pricing Interconnection network elements. TELRIC + CC is the equivalent of fully allocated cost as the term is applied to network elements.

Typically, the cost identified by these cost categories include capital costs for depreciation, return, and income taxes. TSLRIC also includes ongoing operating costs for: administration expense, product management expense, pre sales expense, and business fees.

E. STUDY ASSUMPTIONS

1. All cost are forward looking.
2. See "Inputs" worksheet for a summary of the assumptions.

Collocation: Remote Terminal

Remote Terminal Collocation: South Dakota

Rate Summary*

	NRC	RC
Space (per Standard Mounting Unit)	$ 728.98	$ 0.53
FDI Terminations (per binder group (25-PR))	$ 531.18	$ 0.32
Virtual Remote Collocation		
Flat Charge	$ 36.96	
Engineering Rate, per Half Hour	$ 36.44	
Maintenance, per Half Hour	$ 30.05	
Installation, per Half Hour	$ 30.05	
Training, per Half Hour	$ 30.05	
Power (see Collocation rates)		

*** Costs Not Included:**

Shelf Cost
Element Management System (EMS)
Remote Test Access Unit
Technician time to re-jumper the FDI through DA Hotel.

Collocation: Remote Terminal

Study Name	*Remote Terminal Collocation*	
Study Requester	*Vicki Bishara*	
Type of Study	*TELRIC*	
Study ID	*6503*	
Cost Factor Group	*Interconnection*	
Study Applications		
Completion Date	*June 13, 2002*	
Cost Analyst	*Tom Wilkinson*	
Study Review	**Reviewer**	**Date**
	Vicki Bishara	*June 13, 2002*
Models Used	**Model**	**Version**
	Wholesale Cost Program	*2.08*
	Cost Factor Databases	*02SD01E*
Cost Factors Used	**Factor**	**Effective Date**
	Capital Recovery	*04/02*
	Maintenance	*02/02*
	Ad Valorem	*02/02*
	COE Land & Bldg	*02/02*
	Directly Assigned Factors	*04/02*
	Directly Attributable Factors	*04/02*
	Common	*04/02*
	Cost Of Money	*10.14%*
Inflation		
Major Cost Drivers		

Collocation: Remote Terminal

Study Information

	Value
Filing Month	June
Filing Year	2002
State	SD
State Full Name	SOUTH DAKOTA
Run Date	6/13/02
Factor Vintage	*02SD01E*
Study ID	6503

Configuration Quantities

	Value	Unit
Vendor 1 Cost		
Max Port Usage	3.0	Cards
Additional Cabinet Cost: Pad Mounting Bracket	$ 136.00	Dollars
Additional Cabinet Cost: 2-Protector Blocks for DS1 Terms	$ 522.00	Dollars
Between Cabinets		
Distance Between Cabinets (feet)	35	Feet
Cable Length Between Cabinets (feet)	50	Feet
Total Number Copper Pairs Between Cabinets	400	Pairs
Total Number of DS1s Between Cabinets	50	Pairs
Total Number of 4" Duct Between Cabinets {Copper}	3	Each
Total Number of Set of 2, 2" Innerduct Between Cabinets {Fiber}	1	Set
FDI Specific:		
Number of Additional Termination Blocks	8	Each
Number of Terminations per Block	25	Each

Weightings

	Value	Source
FDI Augment Utilization Fill Factor	70%	
Weighting for Telephony	50%	
Weighting for Packet Switching	85%	
Weighting for Remote Terminal (Whole.)	15%	
Weighting for Remote Terminal Collo w/Telephony	25.0%	
Architecture Weightings		
Vendor 1 Architecture	88%	
Vendor 2 Architecture	12%	
Percent of Time Power Ped Required	90%	
Standard Mounting Unit	1.75	
Cabinet Type 1 (23")	23.00	
Cabinet Type 2 (40")	40.00	
Space Utilization Factor	33%	
Labor Specific		
Service Order Dispatch and Local Testing (L10)		
Minutes	5	Network
Labor Rate	$ 37.78	Engineering
Loop Facilities Installation & Maintenance (L50)		
Hours	0.5	Per Half Hour
Labor Rate	$ 42.68	Engineering
Outside Plant Construction (LP30)		
Minutes	30	Network
Labor Rate	$ 46.20	Engineering
Engineering (N30)		
Hours	0.5	Per Half Hour

Collocation: Remote Terminal

Labor Rate	$ 51.76	Engineering

Collocation Model	Value	
Power Maint Expense Adj	0.003266	G. Investment Factors

Factors	Value
WCP Version	2.08
Cost of Money	10.14%
Capital Recovery	04/02
Maintenance	02/02
Ad Valorem	02/02
Power	01/01
Sales Tax	01/01
Interest During Construction	01/01
COE Land & Bldg	02/02
Directly Assigned Factors	04/02
Directly Attributable Factors	04/02
Common	04/02
Vintage	02SD01E
Investment Loadings	
Power	0.069700
Sales Tax	0.056400
Interest During Construction	0.006100
COE Land And Building Investment	
Building	0.199833
Land	0.003732
Investment Based Monthly Direct Costs	
Depreciation	0.109717
Cost Of Money	0.045455
Income Tax Expense	0.017189
Maintenance	0.010529
Ad Valorem Tax	0.009546
COE Land And Building Cost	
COE Building	0.151319
COE Land	0.155318
Marketing & Business Fees	
Product Management Expense	0.019957
Sales Expense	0.011877
Product Advertising Expense	0.000000
Business Fees (Other Operating Taxes)	0.001483
Other Direct Expenses	
Network Operations	0.034832
Network Support Assets	0.014703
General Support Assets	0.088742
General Purpose Computers	0.043342
Uncollectible	0.003786
Accounting & Finance Expense	0.007346
Human Resources Expense	0.008294
Information Management Expense	0.070887
Intangibles	0.000000
State Prescribed Directly Attributed	0.000000
Common	

Collocation: Remote Terminal

Executive Expense	*0.011267*
Planning Expense	*0.000525*
External Relations Expense	*0.037846*
Legal Expense	*0.004717*
Other Procurement Expense	*0.001860*
Research & Development Expense	*0.000006*
Other General and Admin Expense	*0.015064*
State Prescribed Common	*0.000000*

Remote Terminal Collocation

JPR Assumption Summary

Configuration Quantities

Weightings

FDI Augment Utilization Fill Factor	70%
Weighting for Packet Switching	85%
Weighting for Remote Terminal (Whole.)	15%
Weighting for Remote Terminal Collo w/Telephony	25%
Architecture Weightings	
Vendor 1 Architecture	88%
Vendor 2 Architecture	12%
Percent of Time Power Ped Required	90%
Standard Mounting Unit	1.75
Cabinet Type 1 (23")	23
Cabinet Type 2 (40")	40
Space Utilization Factor	33%

Conversion
SMUs
13
23

Cost Summary

FDI Augment (per block - 25 terminations)

	Loaded Cost	Usage Weighting	SMU Quantity	Utilization Factor	Total
Non-Recurring (per 25 terminations, 1 of 8 blocks)	$ 2,022.14	0.125	*n/a*	70%	$ 361.10
Recurring	$ 1.22	0.125	*n/a*	70%	$ 0.22

DA Cabling

Non-Recurring (per 25-pair, 25 of 400-pair)	$ 1,904.92	0.0625	*n/a*	70%	$ 170.08
Recurring	$ 1.15	0.0625	*n/a*	70%	$ 0.10

	NRC	RC
Total FDI Terminations (per binder group (25-pair),false)	$ 531.18	$ 0.32

DA Hotel Calculations

DA Hotel: Vendor A	Loaded Cost	Usage Weighting	SMU Quantity	Utilization Factor	Total per SMU
Total Non-Recurring	$ 3,470.72	88%	13	33%	$ 711.94
Total Recurring	$ 2.52	88%	13	33%	$ 0.52
DA Hotel: Vendor B					
Total Non-Recurring	$ 1,077.53	12%	23	33%	$ 17.04
Total Recurring	$ 0.65	12%	23	33%	$ 0.01

	NRC	RC
Total Weighted DA Hotel (per Standard Mounting Unit (SMU),false)	$ 728.98	$ 0.53

Remote Terminal Collocation

Configuration Summary

FDI Augment	FRC	RC	NRC	Cost	Wtg	Total Cost
Total Weighted FDI Cost	45		x	$ 1,436.11	100.00%	**$ 1,436.11**

DA Cabling	FRC	RC	NRC	Cost	Wtg	Total Cost
Total Weighted DA Hotel Cabling	4/45		x	$ 1,352.86	100.00%	**$ 1,352.86**

DA Hotel: Vendor A

Material

	FRC	RC	NRC	Cost	Wtg	Total Cost
Cabinet: DA Overlay	257		x	$ 8,875.97	15.00%	$ 1,331.40
Additional Cabinet Cost: Pad Mounting Bracket	257		x	$ 136.00	7.50%	$ 10.20
Additional Cabinet Cost: 2-Protector Blocks for DS1 Terms	45		x	$ 522.00	50.00%	$ 261.00
Installation: Generic Remote DSL Pad	45		x	$ 1,952.08	7.50%	$ 146.41
Exempt Material	45		x	$ 454.66	7.50%	$ 34.10
Juicebox Power Pedestal 100-30 Pad	257		x	$ 2,028.35	6.75%	$ 136.91
Juicebox Power Pedestal 100-30 Pad	257	x		$ 2,028.35	0.75%	$ 15.21
Remote Ankor Frame for 52E	45		x	$ 147.23	7.50%	$ 11.04

Total Material Costs	$ 1,946.27

Engineering

Engineering Costs Associated with:

	FRC	RC	NRC	Cost	Wtg	Total Cost
Cabinet: DA Overlay	257		x	$ 329.95	7.50%	$ 24.75
Installation: Generic Remote DSL Pad	45		x	$ 106.00	7.50%	$ 7.95
Juicebox Power Pedestal 100-30 Pad	257		x	$ 53.00	6.75%	$ 3.58
Juicebox Power Pedestal 100-30 Pad	257	x		$ 53.00	0.75%	$ 0.40
Commercial Power: Electrician Cnct AC to Cab (Cntrctr)	4		x	$ 300.00	7.50%	$ 22.50

Total Engineering Costs	$ 59.17

Splicing

Splicing Costs Associated with:

	FRC	RC	NRC	Cost	Wtg	Total Cost
Cabinet: DA Overlay (splice time)	257		x	$ 4.62	7.50%	$ 0.35
Cabinet: DA Overlay	257		x	$ 119.26	7.50%	$ 8.94
Exempt Material	257		x	$ 31.21	7.50%	$ 2.34
Splice Setup: Site Setup for Splice Activity	45		x	$ 89.00	7.50%	$ 6.68
Exempt Material	45		x	$ 23.29	7.50%	$ 1.75

Total Splicing Costs	$ 20.05

Remote Terminal Collocation

Installation

Installation Costs Associated with:

Cabinet: DA Overlay	257		x	$	26.17	7.50%	$ 1.96
Installation Hourly Costs	257		x	$	-	7.50%	$ -
Juicebox Power Pedestal 100-30 Pad {T&T}	257		x	$	42.03	6.75%	$ 2.84
Juicebox Power Pedestal 100-30 Pad {T&T}	257	x		$	42.03	0.75%	$ 0.32
Commercial Power: Electrician Cnct AC to Cab (Cntrctr)	257		x	$	1,700.00	7.50%	$ 127.50
Remote Ankor Frame for 52E	257		x	$	84.06	7.50%	$ 6.30
Placing Cabinet: Less than 1000 Pounds (Cntrctr)	257		x	$	334.65	7.50%	$ 25.10
Placement: Power Pedestal (Cntrctr)	257		x	$	75.51	6.75%	$ 5.10

Total Installation Costs	$ 169.11

Right-Of-Way

Right of Way for Privately Owned Locations	45		x	$	3,710.00	7.500%	$ 278.25
Right of Way for Publicly Owned Locations	45		x	$	106.00	7.500%	$ 7.95

Total Right-Of-Way Costs	$ 286.20
Total Cost, DA Hotel: Vendor A	**$ 2,480.81**

DA Hotel: Vendor A Weighted Expense by FRC

FRC	Total
4C	$ 188.46
45C	$ 555.62
257C	$ 1,720.81
	$ 2,464.88

DA Hotel: Vendor A Weighted Investment by FRC

FRC	Total
4C	$ -
45C	$ -
257C	$ 15.93
	$ 15.93

Remote Terminal Collocation

DA Hotel: Vendor B

Material

		RC	NRC	Cost	Wtg	Total Cost
Cost per USAM Shelf	257		x	$ 117.11	25%	$ 29.28
Placement: Up to 6" Concrete to Forms for Cabinet Base	257		x	$ -	13%	$ -
Juicebox Power Pedestal 100-30 Pad	257		x	$ 2,028.35	13%	$ 253.54
Total Material Costs						$ 282.82

Engineering

Engineering Costs Associated with:

		RC	NRC	Cost	Wtg	Total Cost
Cost per USAM Shelf	257		x	$ 53.00	13%	$ 6.63
Juicebox Power Pedestal 100-30 Pad	257		x	$ 53.00	13%	$ 6.63
Commercial Power: Electrician Cnct AC to Cab (Cntrctr)	257		x	$ -	13%	$ -
Total Engineering Costs						$ 13.25

Splicing

Splicing Costs Associated with:

		RC	NRC	Cost	Wtg	Total Cost
Splicing: Copper Pairs for Buried Cable - Extra Splices	45		x	$ -	13%	$ -
Exempt Material	45		x	$ -	13%	$ -
Splice Setup: Site Setup for Splice Activity	45		x	$ -	13%	$ -
Exempt Material	45		x	$ -	13%	$ -
Trip Charge for Qwest to and from Urban Work Location	257		x	$ -	13%	$ -
Total Splicing Costs						$ -

Installation

Installation Costs Associated with:

		RC	NRC	Cost	Wtg	Total Cost
Large Cabinet Equipped with 12 USAM Shelves {T&T}	257		x	$ -	13%	$ -
Juicebox Power Pedestal 100-30 Pad {T&T}	257		x	$ 42.03	13%	$ 5.25
Commercial Power: Electrician Cnct AC to Cab (Cntrctr)	257		x	$ -	13%	$ -
Placing Cabinet: 1000 Pounds or More	257		x	$ -	13%	$ -
Placement: Ground Grid	257		x	$ -	13%	$ -
Placement: Power Pedestal (Cntrctr)	257		x	$ -	13%	$ -
Total Installation Costs						$ 5.25

Right-Of-Way

		RC	NRC	Cost	Wtg	Total Cost
Right of Way for Privately Owned Locations	45		x	$ 3,710.00	13%	$ 463.75
Right of Way for Publicly Owned Locations	45		x	$ 1.42	13%	$ 0.18
Total Right-Of-Way Costs						$ 463.93

Total Cost, DA Hotel: Vendor B **$ 765.25**

DA Hotel: Vendor B Expense by FRC

FRC	Total
45C	$ 463.93
257C	$ 301.33
	$ 765.25

FDI Augment

FDI Assumption Summary

Configuration Quantities

	Amt	Unit
FDI Specific:		
Number of Additional Termination Blocks	8	Each
Number of Terminations per Block	25	Each

Use Existing FDI

Material

	FRC	Qty	Unit	Qty	Unit	Unit Cost	Amount	
New Termination Blocks								
Block: SAI 25-Pair Block	45			8	*Each*	$ 117.11	$ 936.88	
Total Material Costs								$ 936.88

Engineering

	FRC	Qty	Unit	Qty	Unit	Unit Cost	Amount	
Engineering Costs Associated with:								
Block: SAI 25-Pair Block	45	8	*Each*	1	*Hour(s)*	$ 53.00	$ 424.00	
Total Engineering Costs								$ 424.00

Splicing

	FRC	Qty	Unit	Qty	Unit	Unit Cost	Amount	
Splicing Costs Associated with:								
Block: SAI 25-Pair Block {8*25=200}	45	200	*Pair*	0.007	*Hour(s)*	$ 44.50	$ 59.63	
Exempt Material {8*25=200}	45	200	*Pair*	0.007	*Each*	$ 11.64	$ 15.60	
Total Splicing Costs								$ 75.23

	FDI Total
Total Cost, Use Existing FDI	**$ 1,436.11**

FDI Augment Expense by FRC

FRC	Total
45C	$ 1,436.11
	$ 1,436.11

DA Hotel Cabling

{Cable placement for new DA Hotel & splicing at FDI only.}

DA Hotel Cabling Assumptions

Configuration Quantities

	Amt	Unit
Between Cabinets		
Distance Between Cabinets (feet)	35	Feet
Cable Length Between Cabinets (feet)	50	Feet
Total Number Copper Pairs Between Cabinets	400	Pairs
Total Number of DS1s Between Cabinets	50	Pairs
Total Number of 4" Duct Between Cabinets {Copper}	3	Each
Total Number of Set of 2, 2" Innerduct Between Cabinets {Fiber}	1	Set

DA Hotel Cabling Calculations

Material

	FRC	Qty	Unit	Qty	Unit	Unit Cost	Amount
Cabling							
Copper Cable Buried: 24 Gauge, 400-Pair	45			50	*Sheath Feet*	$ 2.75	$ 137.61
Copper Cable Buried: 24 Gauge, 50-Pair	45			50	*Sheath Feet*	$ 0.44	$ 22.19
Conduit: 4" PVC-Type Conduit - 1 Duct Buried	4	3	*Each*	35	*Feet*	$ 0.85	$ 89.12
Innerduct: 2, 1-1/4" Innerduct Buried	4	1	*Set*	35	*Feet*	$ 0.73	$ 25.61
Total Material Costs							$ 274.53

Engineering

	FRC	Qty	Unit	Qty	Unit	Unit Cost	Amount
Engineering Costs Associated with:							
Design Work Package	45			8.0	*Hour(s)*	$ 53.00	$ 424.00
Copper Cable Buried: 24 Gauge, 400-Pair	45	50	*Sheath Feet*	0.0112	*Hour(s)*	$ 53.00	$ 29.68
Copper Cable Buried: 24 Gauge, 50-Pair	45	50	*Sheath Feet*	0.0074	*Hour(s)*	$ 53.00	$ 19.61
Conduit: 4" PVC-Type Conduit - 1 Duct Buried {3*35=105}	4	105	*Sheath Feet*	0.0032	*Hour(s)*	$ 53.00	$ 17.81
Innerduct: 2, 1-1/4" Innerduct Buried {1*35=35}	4	35	*Sheath Feet*	0.013	*Hour(s)*	$ 53.00	$ 24.12
Total Engineering Costs							$ 515.21

Splicing

	FRC	Qty	Unit	Qty	Unit	Unit Cost	Amount
Splicing Costs Associated with:							
Copper Cable Buried: 24 Gauge, 400-Pair {2*400=800}	45	800	*Pair*	0.0067	*Hour(s)*	$ 44.50	$ 238.52
Exempt Material {2*400=800}	45	800	*Pair*	0.0067	*Each*	$ 11.64	$ 62.41
Splice Setup: Site Setup for Splice Activity	45	1	*Each*	2	*Hour(s)*	$ 44.50	$ 89.00
Exempt Material	45	1	*Each*	2	*Each*	$ 11.64	$ 23.29
Copper Cable Buried: 24 Gauge, 50-Pair {2*50=100}	45	100	*Pair*	0.0067	*Hour(s)*	$ 44.50	$ 29.82
Exempt Material {2*50=100}	45	100	*Pair*	0.0067	*Each*	$ 11.64	$ 7.80
Splice Setup: Site Setup for Splice Activity	45	1	*Each*	2	*Hour(s)*	$ 44.50	$ 89.00
Exempt Material	45	1	*Each*	2	*Each*	$ 11.64	$ 23.29
Total Splicing Costs							$ 563.13

DA Hotel Cabling

{Cable placement for new DA Hotel & splicing at FDI only.}

Installation

Costs Associated with:

Single Direct Buried Duct	45	1	*Each*	35	*Each*	$	-	$	-
Each Additional Duct Placed in Trench	4	4	*Each*	35	*Feet*	$	-	$	-
Exempt Material {4*35=140}	4	140	*Each*	-	*Each*	$	11.64	$	-
Copper Cable Buried: 24 Gauge, 400-Pair	45	2	*Each*	50	*Feet*		100		
Pulling Cable into Conduit (Line Costs)	45	2	*Each*	50	*Feet*	$	-	$	-
Line Hourly Costs	45	100	*Each*	-	*Hour(s)*	$	48.55	$	-
Exempt Material	45	100	*Each*	-	*Each*	$	11.64	$	-

Total Installation Costs	$ -

Total Cost, DA Hotel Cabling	**$ 1,352.86**

DA Hotel Cabling Expense by FRC

FRC		Total
4C	$	156.65
45C	$	1,196.21
	$	1,352.86

DA Hotel: Vendor A

FDI Assumption Summary

	Amt	Unit
Configuration Quantities		
Vendor 1 Cost		
Max Port Usage	3	Cards
Additional Cabinet Cost: Pad Mounting Bracket	$ 136.00	Dollars
Additional Cabinet Cost: 2-Protector Blocks for DS1 Terms	$ 522.00	Dollars

DA Hotel: Vendor A Calculations

Material

DA Hotel

	FRC	Qty	Unit	Qty	Unit	Unit Cost	Amount
Cabinet: DA Overlay	257			3	per Card	$ 2,958.66	$ 8,875.97
Additional Cabinet Cost: Pad Mounting Bracket	257			1	Each	$ 136.00	$ 136.00
Additional Cabinet Cost: 2-Protector Blocks for DS1 Terms	45			1	Each	$ 522.00	$ 522.00
Installation: Generic Remote DSL Pad	45			1	Each	$ 1,952.08	$ 1,952.08
Exempt Material	45	1	Each	39.0461	Each	$ 11.64	$ 454.66
Juicebox Power Pedestal 100-30 Pad	257			1	Each	$ 2,028.35	$ 2,028.35
Remote Ankor Frame for 52E	45			1	Each	$ 147.23	$ 147.23
Total Material Costs							$ 14,116.29

Engineering

Engineering Costs Associated with:

Cabinet: DA Overlay	257	3	per Card	2.075134168	Hour(s)	$ 53.00	$ 329.95
Installation: Generic Remote DSL Pad	45	1	Each	2	Hour(s)	$ 53.00	$ 106.00
Juicebox Power Pedestal 100-30 Pad	257	1	Each	1	Hour(s)	$ 53.00	$ 53.00
Commercial Power: Electrician Cnct AC to Cab (Cntrctr)	4			1	Feet	$ 300.00	$ 300.00
Remote Ankor Frame for 52E	45	1	Each	0	Hour(s)	$ 53.00	$ -
Total Engineering Costs							$ 788.95

Splicing *(Cables placed & priced on DA Hotel Cabling tab.)*

Splicing Costs Associated with:

Cabinet: DA Overlay	257	3	per Card	0.034571735	Hour(s)	$ 44.50	$ 4.62
Cabinet: DA Overlay	257	400	Pair	0.0067	Hour(s)	$ 44.50	$ 119.26
Exempt Material	257	400	Pair	0.0067	Each	$ 11.64	$ 31.21
Splice Setup: Site Setup for Splice Activity	45	1	Each	2	Hour(s)	$ 44.50	$ 89.00
Exempt Material	45	1	Each	2	Each	$ 11.64	$ 23.29
Total Splicing Costs							$ 267.37

Installation

Costs Associated with:

Cabinet: DA Overlay	257	3	per Card	0.208	Hour(s)	$ 42.03	$ 26.17
Installation Hourly Costs	257	3	per Card	-	Hour(s)	$ 42.03	$ -
Juicebox Power Pedestal 100-30 Pad	257			1.000	Hour(s)	$ 42.03	$ 42.03
Commercial Power: Electrician Cnct AC to Cab (Cntrctr)	257			1.000	Each	$ 1,700.00	$ 1,700.00
Remote Ankor Frame for 52E	257			2.000	Each	$ 42.03	$ 84.06
Placing Cabinet: Less than 1000 Pounds (Cntrctr)	257			1.000	Each	$ 334.65	$ 334.65
Placement: Power Pedestal (Cntrctr)	257			1.000	Each	$ 75.51	$ 75.51
Total Installation Costs							$ 2,262.42

Right-Of-Way

Costs Associated with:

Right of Way for Privately Owned Locations	45			3.5	Each	$ 1,060.00	$ 3,710.00
Right of Way for Publicly Owned Locations	45			1	Each	$ 106.00	$ 106.00
Total Right-Of-Way Costs							$ 3,816.00

Total Cost, DA Hotel: Vendor A **$ 21,251.02**

DA Hotel: Vendor A

DA Hotel: Vendor A Costs by FRC

FRC		Total
4C	$	2,512.74
45C	$	4,450.29
257	$	14,288.00
	$	21,251.02

DA Hotel: Vendor B

DA Hotel: Vendor B Calculations

Material	FRC	Qty	Unit	Qty	Unit	Unit Cost	Amount
DA Hotel							
Large Cabinet Equipped with 12 USAM Shelves	257			1	Each	$ 117.11	
Large Cabinet Equipped with 8 USAM Shelves	257			(1)	Each	$ 117.11	
Cost per USAM Shelf	257			1			$ 117.11
Placement: Up to 6" Concrete to Forms for Cabinet Base	257			160	Feet	$ -	$ -
Juicebox Power Pedestal 100-30 Pad	257			1	Each	$ 2,028.35	$ 2,028.35
Total Material Costs							$ 2,145.46

Engineering	FRC	Qty	Unit	Qty	Unit	Unit Cost	Amount
Engineering Costs Associated with:							
Large Cabinet Equipped with 12 USAM Shelves	257	1	Each	1	Hour(s)	$ 53.00	$ 53.00
Juicebox Power Pedestal 100-30 Pad	257	1	Each	1	Hour(s)	$ 53.00	$ 53.00
Commercial Power: Electrician Cnct AC to Cab (Cntrctr)	257			1	Feet	$ -	$ -
Total Engineering Costs							$ 106.00

Splicing *(Cables placed & priced on DA Hotel Cabling tab.)*	FRC	Qty	Unit	Qty	Unit	Unit Cost	Amount
Splicing Costs Associated with:							
Splicing: Copper Pairs for Buried Cable - Extra Splices	45	1,600	Feet	0	Hour(s)	$ 44.50	$ -
Exempt Material	45	1,600	Feet	0	Each	$ 11.64	$ -
Splice Setup: Site Setup for Splice Activity	45	1	Feet	0	Hour(s)	$ 44.50	$ -
Exempt Material	45	1	Feet	0	Each	$ 11.64	$ -
Trip Charge for Qwest to and from Urban Work Location	257	6	Each	-	Hour(s)	$ 44.50	$ -
Total Splicing Costs							$ -

Installation	FRC	Qty	Unit	Qty	Unit	Unit Cost	Amount
Installation Costs Associated with:							
Large Cabinet Equipped with 12 USAM Shelves	257	1	Each	-	Hour(s)	$ 42.03	$ -
Juicebox Power Pedestal 100-30 Pad	257	1	Each	1.0	Hour(s)	$ 42.03	$ 42.03
Commercial Power: Electrician Cnct AC to Cab (Cntrctr)	257			1	Feet	$ -	$ -
Placing Cabinet: 1000 Pounds or More	257			1	Each	$ -	$ -
Placement: Ground Grid	257			1	Each	$ -	$ -
Placement: Power Pedestal (Cntrctr)	257			1	Each	$ -	$ -
Total Installation Costs							$ 42.03

Right-Of-Way	FRC	Qty	Unit	Qty	Unit	Unit Cost	Amount
Costs Associated with:							
Right of Way for Privately Owned Locations	45			3.5	Each	$ 1,060.00	$ 3,710.00
Right of Way for Publicly Owned Locations	45			1	Feet	$ 1.42	$ 1.42
Total Right-Of-Way Costs							$ 3,711.42

Total Cost, DA Hotel: Vendor B	**$ 6,004.91**

DA Hotel: Vendor B

DA Hotel: Vendor B Costs by FRC

FRC		Total
45C	$	3,711.42
257C	$	2,293.49
	$	6,004.91

Flat Rate

Service Order Dispatch and Local Testing (P10)

(AMSC Call Center)

Hours	0.083
Expense/Unit	$ 37.78

Outside Plant Construction (P30)

(Design Repair Center)

Hours	0.5
Expense/Unit	$ 46.20

Total Expense		**$ 26.25**

Loading

Total Loaded Cost	**$**	**36.96**

P10 SERVICE ORDER DISPATCH AND LOCAL TESTING
(Account 6534.11)

Used for work and costs associated with selecting and assigning telephone numbers, line equipment, and facilities; performing service order activities and customer trouble activities including installation workload, dispatching forces, testing, and clearing; receiving and recording employee time related to work load control for field forces; and customer operations in the Video Broadband Level I Operations Center.

P30 OUTSIDE PLANT CONSTRUCTION
(Account 6534.11)

Used for work and costs associated with the following Outside Plant Construction functions:

- Performing processing activities for construction functions
- Coordinating the work of placing, splicing, and contract crews
- Handling queries regarding work order activities
- Typical activities include:
  - Compiling and preparing reports
  - Ordering tools and materials
  - Preparing and maintaining various work schedules and summary forms
  - Updating database for mechanized systems
  - Performing other similar processing activities

Collocation: Virtual Remote Terminal

Engineering Rate

Engineering

Hours	0.5	
Expense/Unit	$ 51.76	
Total Expense		**$ 25.88**

Loading

Total Loaded Cost	**$**	**36.44**

E30 OUTSIDE PLANT PLANNING AND ENGINEERING
(Account 6535.11)

Used for work and costs associated with tactical planning and design engineering for Outside Plant. Included are outside plant facilities consisting of poles, towers, aerial and buried wire, service wire, cable (aerial, buried, underground, intrabuilding, submarine, metallic and nonmetallic), underground conduit and manholes; and local loop transmission systems consisting of carrier and multiplex equipment.

Exclusion:
Towers located on top of buildings.

Collocation: Virtual Remote Terminal

Maintenance Rate

Loop Facilities Installation & Maintenance (L50)

Hours	0.5	
Expense/Unit	$ 42.68	
Total Expense		**$ 21.34**

Loading

Total Loaded Cost	**$**	**30.05**

P50 LOOP FACILITIES INSTALLATION & MAINTENANCE
(Account 6534.11)

Used for work and costs associated with the following Loop Facilities Installation and Maintenance functions:

- Installing, removing, rearranging, repairing, and maintaining:
  - Aerial and buried outside service wire, ground protector, network terminating wire, Network Channel Terminating Equipment (NCTE) and Network Interface (NI) for customer services
  - Customer-owned wire and cable as requested
  - Various types of carrier and pair gain equipment
- Performing preservice field tests
- Performing service restoration and routine maintenance field tests
- Participating in the isolation of outside plant troubles associated with the installation and maintenance process
- Performing cross-connections and rearrangements in the local distribution facilities associated with the installation and repair process
- Repairing and/or performing routine maintenance of selected outside plant troubles
- Analyzing complex circuitry

Collocation: Virtual Remote Terminal

Installation Rate

Loop Facilities Installation & Maintenance (L50)

Hours	0.5	
Expense/Unit	$ 42.68	
Total Expense		**$ 21.34**

Loading

Total Loaded Cost	**$**	**30.05**

P50 LOOP FACILITIES INSTALLATION & MAINTENANCE
(Account 6534.11)

Used for work and costs associated with the following Loop Facilities Installation and Maintenance functions:

- Installing, removing, rearranging, repairing, and maintaining:
  - Aerial and buried outside service wire, ground protector, network terminating wire, Network Channel Terminating Equipment (NCTE) and Network Interface (NI) for customer services
  - Customer-owned wire and cable as requested
  - Various types of carrier and pair gain equipment
- Performing preservice field tests
- Performing service restoration and routine maintenance field tests
- Participating in the isolation of outside plant troubles associated with the installation and maintenance process
- Performing cross-connections and rearrangements in the local distribution facilities associated with the installation and repair process
- Repairing and/or performing routine maintenance of selected outside plant troubles
- Analyzing complex circuitry

Collocation: Virtual Remote Terminal

Training Rate

Loop Facilities Installation & Maintenance (L50)

Hours	0.5	
Expense/Unit	$ 42.68	
Total Expense		**$ 21.34**

Loading

Total Loaded Cost	**$**	**30.05**

P50 LOOP FACILITIES INSTALLATION & MAINTENANCE
(Account 6534.11)

Used for work and costs associated with the following Loop Facilities Installation and Maintenance functions:

- Installing, removing, rearranging, repairing, and maintaining:
  - Aerial and buried outside service wire, ground protector, network terminating wire, Network Channel Terminating Equipment (NCTE) and Network Interface (NI) for customer services
  - Customer-owned wire and cable as requested
  - Various types of carrier and pair gain equipment
- Performing preservice field tests
- Performing service restoration and routine maintenance field tests
- Participating in the isolation of outside plant troubles associated with the installation and maintenance process
- Performing cross-connections and rearrangements in the local distribution facilities associated with the installation and repair process
- Repairing and/or performing routine maintenance of selected outside plant troubles
- Analyzing complex circuitry

Collocation: Virtual Remote Terminal

Collocation: Remote Terminal

WCP Recurring

	Factor Value	Vendor A DA Hotel Investment
257C Investment		$ 15.93
COE Land And Building Investment		
Building	0.199833	3.18241
Land	0.003732	0.05943
Investment With COE Land And Bldg		19.16719
Investment Based Monthly Direct Costs		
Depreciation	0.109717	0.14561
Cost Of Money	0.045455	0.06032
Income Tax Expense	0.017189	0.02281
Maintenance	0.010529	0.01397
Ad Valorem Tax	0.009546	0.01267
Investment Based Monthly Direct Costs		0.25538
COE Land And Building Cost		
COE Building	0.151319	0.04013
COE Land	0.155318	0.00077
COE Land And Building Monthly Costs		0.04090
Total Investment Based Monthly Costs		0.29628
Marketing & Business Fees		
Product Management Expense	0.019957	0.00591
Sales Expense	0.011877	0.00352
Product Advertising Expense	0.000000	0.00000
Business Fees (Other Operating Tax	0.001483	0.00045
Marketing & Business Fees Total		0.00989
Sub-Total Invst., B&C, Marketing		0.30617
Other Direct Expenses		
Network Operations	0.034832	0.01066
Network Support Assets	0.014703	0.00450
General Support Assets	0.088742	0.02717
General Purpose Computers	0.043342	0.01327
Uncollectible	0.003786	0.00116
Accounting & Finance Expense	0.007346	0.00225
Human Resources Expense	0.008294	0.00254
Information Management Expense	0.070887	0.02170
Intangibles	0.000000	0.00000
Total Other Direct Expenses		0.08326
TELRIC		0.38943
Common		
Executive Expense	0.011267	0.00439
Planning Expense	0.000525	0.00020
External Relations Expense	0.037846	0.01474
Legal Expense	0.004717	0.00184
Other Procurement Expense	0.001860	0.00072
Research & Development Expense	0.000006	0.00000
Other General and Admin Expense	0.015064	0.00587
Common Costs		0.02776
TELRIC + Common Costs		0.41719

Collocation: Remote Terminal

WCP Maintenance

	Factor Value	FDI Augment Total	DA Hotel Cabling Total	Vendor A DA Hotel Total	Vendor B DA Hotel Total
Investment		$ 1,436.11	$ 1,352.86	$ 2,464.88	$ 765.25
Investment Based Costs					
Maintenance	0.007263	$0.87	$0.82	$1.49	$0.46
Marketing & Business Fees					
Product Management Expense	0.019957	$0.01735	$0.01634	$0.02977	$0.00924
Sales Expense	0.011877	$0.01032	$0.00972	$0.01772	$0.00550
Product Advertising Expense	0.000000	$0.00000	$0.00000	$0.00000	$0.00000
Business Fees (Other Operating Taxe	0.001483	$0.00133	$0.00125	$0.00228	$0.00071
Marketing & Business Fees Total		$0.02900	$0.02732	$0.04977	$0.01545
Sub-Total Invst., B&C, Marketing		$0.89817	$0.84611	$1.54158	$0.47860
Other Direct Expenses					
Network Operations	0.034832	$0.03128	$0.02947	$0.05370	$0.01667
Network Support Assets	0.014703	$0.01321	$0.01244	$0.02267	$0.00704
General Support Assets	0.088742	$0.07971	$0.07509	$0.13680	$0.04247
General Purpose Computers	0.043342	$0.03893	$0.03667	$0.06682	$0.02074
Uncollectible	0.003786	$0.00340	$0.00320	$0.00584	$0.00181
Accounting & Finance Expense	0.007346	$0.00660	$0.00622	$0.01132	$0.00352
Human Resources Expense	0.008294	$0.00745	$0.00702	$0.01279	$0.00397
Information Management Expense	0.070887	$0.06367	$0.05998	$0.10928	$0.03393
Intangibles	0.000000	$0.00000	$0.00000	$0.00000	$0.00000
Total Other Direct Expenses		$0.24424	$0.23008	$0.41921	$0.13015
TELRIC		$1.14241	$1.07619	$1.96079	$0.60875
Common					
Executive Expense	0.011267	$0.01287	$0.01213	$0.02209	$0.00686
Planning Expense	0.000525	$0.00060	$0.00057	$0.00103	$0.00032
External Relations Expense	0.037846	$0.04324	$0.04073	$0.07421	$0.02304
Legal Expense	0.004717	$0.00539	$0.00508	$0.00925	$0.00287
Other Procurement Expense	0.001860	$0.00212	$0.00200	$0.00365	$0.00113
Research & Development Expense	0.000006	$0.00001	$0.00001	$0.00001	$0.00000
Other General and Admin Expense	0.015064	$0.01721	$0.01621	$0.02954	$0.00917
Common Costs		$0.08144	$0.07672	$0.13978	$0.04340
TELRIC + Common Costs		$1.22385	$1.15290	$2.10056	$0.65215

Collocation: Remote Terminal

WCP Non-Recurring

	Factor Value	FDI Augment Expense	DA Hotel Cabling Expense	Vendor A DA Hotel Expense	Vendor B DA Hotel Expense	Flat Rate Cost	Engineering Cost	Maintenance Cost	Installation Cost	Training Cost
Expense		$ 1,436.11	$ 1,352.86	$ 2,464.88	$ 765.25	$ 26.25	$ 25.88	$ 21.34	$ 21.34	$ 21.34
Marketing & Business Fees										
Product Management Expense	0.019957	$ 28.66	$ 27.00	$ 49.19	$ 15.27	$ 0.52	$ 0.52	$ 0.43	$ 0.43	$ 0.43
Sales Expense	0.011877	$ 17.06	$ 16.07	$ 29.28	$ 9.09	$ 0.31	$ 0.31	$ 0.25	$ 0.25	$ 0.25
Product Advertising Expense	0.000000	$ -	$ -	$ -	$ -	$ -	$ -	$ -	$ -	$ -
Business Fees (Other Operating Taxe	0.001483	$ 2.20	$ 2.07	$ 3.77	$ 1.17	$ 0.04	$ 0.04	$ 0.03	$ 0.03	$ 0.03
Marketing & Business Fees Total		$ 47.92	$ 45.14	$ 82.24	$ 25.53	$ 0.88	$ 0.86	$ 0.71	$ 0.71	$ 0.71
Sub-Total Invst., B&C, Marketing		$ 1,484.03	$ 1,398.00	$ 2,547.12	$ 790.79	$ 27.12	$ 26.74	$ 22.05	$ 22.05	$ 22.05
Other Direct Expenses										
Network Operations	0.034832	$ 51.69	$ 48.69	$ 88.72	$ 27.54	$ 0.94	$ 0.93	$ 0.77	$ 0.77	$ 0.77
Network Support Assets	0.014703	$ 21.82	$ 20.56	$ 37.45	$ 11.63	$ 0.40	$ 0.39	$ 0.32	$ 0.32	$ 0.32
General Support Assets	0.088742	$ 131.70	$ 124.06	$ 226.04	$ 70.18	$ 2.41	$ 2.37	$ 1.96	$ 1.96	$ 1.96
General Purpose Computers	0.043342	$ 64.32	$ 60.59	$ 110.40	$ 34.27	$ 1.18	$ 1.16	$ 0.96	$ 0.96	$ 0.96
Uncollectible	0.003786	$ 5.62	$ 5.29	$ 9.64	$ 2.99	$ 0.10	$ 0.10	$ 0.08	$ 0.08	$ 0.08
Accounting & Finance Expense	0.007346	$ 10.90	$ 10.27	$ 18.71	$ 5.81	$ 0.20	$ 0.20	$ 0.16	$ 0.16	$ 0.16
Human Resources Expense	0.008294	$ 12.31	$ 11.59	$ 21.13	$ 6.56	$ 0.22	$ 0.22	$ 0.18	$ 0.18	$ 0.18
Information Management Expense	0.070887	$ 105.20	$ 99.10	$ 180.56	$ 56.06	$ 1.92	$ 1.90	$ 1.56	$ 1.56	$ 1.56
Intangibles	0.000000	$ -	$ -	$ -	$ -	$ -	$ -	$ -	$ -	$ -
State Prescribed Directly Attributed	0.000000	$0.00	$0.00	$0.00	$0.00	$0.00	$0.00	$0.00	$0.00	$0.00
Total Other Direct Expenses		$ 403.55	$ 380.16	$ 692.64	$ 215.04	$ 7.38	$ 7.27	$ 6.00	$ 6.00	$ 6.00
TELRIC		$ 1,887.58	$ 1,778.16	$ 3,239.77	$ 1,005.82	$ 34.50	$ 34.02	$ 28.05	$ 28.05	$ 28.05
Common										
Ex[illegible]e Expense	0.011267	$ 21.27	$ 20.04	$ 36.50	$ 11.33	$ 0.39	$ 0.38	$ 0.32	$ 0.32	$ 0.32
Pl[illegible] Expense	0.000525	$ 0.99	$ 0.93	$ 1.70	$ 0.53	$ 0.02	$ 0.02	$ 0.01	$ 0.01	$ 0.01
External Relations Expense	0.037846	$ 71.44	$ 67.30	$ 122.61	$ 38.07	$ 1.31	$ 1.29	$ 1.06	$ 1.06	$ 1.06
Legal Expense	0.004717	$ 8.90	$ 8.39	$ 15.28	$ 4.74	$ 0.16	$ 0.16	$ 0.13	$ 0.13	$ 0.13
Other Procurement Expense	0.001860	$ 3.51	$ 3.31	$ 6.02	$ 1.87	$ 0.06	$ 0.06	$ 0.05	$ 0.05	$ 0.05
Research & Development Expense	0.000006	$ 0.01	$ 0.01	$ 0.02	$ 0.01	$ 0.00	$ 0.00	$ 0.00	$ 0.00	$ 0.00
Other General and Admin Expense	0.015064	$ 28.43	$ 26.79	$ 48.80	$ 15.15	$ 0.52	$ 0.51	$ 0.42	$ 0.42	$ 0.42
State Prescribed Common	0.000000	$0.00	$0.00	$0.00	$0.00	$0.00	$0.00	$0.00	$0.00	$0.00
Common Costs		$ 134.56	$ 126.76	$ 230.95	$ 71.70	$ 2.46	$ 2.42	$ 2.00	$ 2.00	$ 2.00
TELRIC + Common Costs		$ 2,022.14	$ 1,904.92	$ 3,470.72	$ 1,077.53	$ 36.96	$ 36.44	$ 30.05	$ 30.05	$ 30.05

Collocation: Remote Terminal

1	2	3	4	5	6
Collocation Reference ID	**Title**	**Unit of Measure**	**FRC**	**Suffix**	**Ntwk Cost per Unit**
60	Commercial Power: Electrician Cnct AC to Cab (Cntrctr)	Each	257	C	$ 2,000.00
59	Placement: Up to 6" Concrete to Forms for Cabinet Base	Square Feet	257	C	$ 16.85
68	Single Direct Buried Duct	Feet	45	C	$ 3.04
54	Each Additional Duct Placed in Trench	Feet	4	C	$ 0.49
55	Pulling Cable into Conduit	Feet	45	C	$ 1.17
57	Splicing: Copper Pairs for Buried Cable - Extra Splices	Pair	45	C	$ 0.38
61	Placing Cabinet: 1000 Pounds or More	Each	257	C	$ 446.17
62	Placing Cabinet: Less than 1000 Pounds (Cntrctr)	Each	257	C	$ 334.65
63	Placement: Ground Grid	Each	257	C	$ 186.00
64	Placement: Power Pedestal (Cntrctr)	Each	257	C	$ 75.51
69	Installation: Generic Remote DSL Pad	Each	4	C	$ 2,406.69
48	Right of Way for Privately Owned Locations	Each	45	C	$ 1,060.00
56	Right of Way for Publicly Owned Locations	Each	45	C	$ 106.00
51	Splice Setup: Site Setup for Splice Activity	Each	45	C	$ 112.29
58	Trip Charge for Qwest to and from Urban Work Location	Each	257	C	$ 44.50
50	Juicebox Power Pedestal 100-30 Pad	Each	257	C	$ 2,070.38
53	Copper Cable Buried: 24 Gauge, 400-Pair	Sheath Feet	45	C	$ 3.35
52	Copper Cable Buried: 24 Gauge, 50-Pair	Sheath Feet	45	C	$ 0.44
66	Large Cabinet Equipped with 12 USAM Shelves	Each	257	C	$ 34,250.87
67	Large Cabinet Equipped with 8 USAM Shelves	Each	257	C	$ 30,879.10
71	Remote Ankor Frame for 52E	Each	257	C	$ 258.29
70	Card: Card Package	Each	257	C	$ 14,425.79
47	Conduit: 4" PVC-Type Conduit - 1 Duct Buried	Feet	4	C	$ 1.02
49	Innerduct: 2, 1-1/4" Innerduct Buried	Feet	4	C	$ 1.42
65	Block: SAI 25-Pair Block	Each	45	C	$ 117.11
Engineering	Engineering Hourly Costs	Hour(s)		C	$ 53.00
Exempt Material	Exempt Material	Each		C	$ 11.64
Installation	Line Hourly Costs	Hour(s)		C	$ 48.55
QwestInstallation	Installation Hourly Costs	Hour(s)		C	$ 42.03
Splicing	Splicing Hourly Costs	Hour(s)		C	$ 44.50
T&T	Test and Turnup	Hour(s)		C	$ 42.03
72	Cabinet: DA Overlay	per Card	257	C	(n/a)

Collocation: R[illegible]mote Terminal

1	7	8	9	10	11	12	13	14	15	16	17
	Material Costs						Qwest Labor Costs				
Collocation Reference ID	Supplier Contract	BRI Load	Sales Tax	Shipping	Total Mat. Cost	Softwr RTU	Line $ 48.55	Splice $ 44.50	Install $ 42.03	Engrg $ 53.00	T&T $ 42.03
60	$ -	$ -	$ -	$ -	$ -	$ -	$ -	$ -	$ -	$ -	$ -
59	$ -	$ -	$ -	$ -	$ -	$ -	$ -	$ -	$ -	$ -	$ -
68	$ -	$ -	$ -	$ -	$ -	$ -	$ -	$ -	$ -	$ -	$ -
54	$ -	$ -	$ -	$ -	$ -	$ -	$ -	$ -	$ -	$ -	$ -
55	$ -	$ -	$ -	$ -	$ -	$ -	$ 0.00	$ -	$ -	$ -	$ -
57	$ -	$ -	$ -	$ -	$ -	$ -	$ -	$ 0.01	$ -	$ -	$ -
61	$ -	$ -	$ -	$ -	$ -	$ -	0.000000	0.000000	0.000000	0.000000	0.000000
62	$ -	$ -	$ -	$ -	$ -	$ -	0.000000	0.000000	0.000000	0.000000	0.000000
63	$ -	$ -	$ -	$ -	$ -	$ -	0.000000	0.000000	0.000000	0.000000	0.000000
64	$ -	$ -	$ -	$ -	$ -	$ -	0.000000	0.000000	0.000000	0.000000	0.000000
69	$ -	$ -	$ -	$ -	$ -	$ -	0.000000	0.000000	0.000000	2.000000	0.000000
48	$ -	$ -	$ -	$ -	$ -	$ -	0.000000	0.000000	0.000000	20.000000	0.000000
56	$ -	$ -	$ -	$ -	$ -	$ -	0.000000	0.000000	0.000000	2.000000	0.000000
51	$ -	$ -	$ -	$ -	$ -	$ -	0.000000	2.000000	0.000000	0.000000	0.000000
58	$ -	$ -	$ -	$ -	$ -	$ -	0.000000	1.000000	0.000000	0.000000	0.000000
50	$ 1,837.20	$ 0.92	$ 110.23	$ 80.00	$ 2,028.35	$ -	0.000000	0.000000	0.000000	1.000000	1.000000
53	$ 2.35	$ 0.26	$ 0.14	$ -	$ 2.7521	$ -	0.000000	0.000000	0.000000	0.011200	0.000000
52	$ 0.38	$ 0.04	$ 0.02	$ -	$ 0.44	$ -	0.000000	0.000000	0.000000	0.007400	0.000000
66	$ 31,684.90	$ 15.84	$ 1,901.09	$ 600.00	$ 34,201.84	$ -	0.000000	0.000000	0.166600	10.000000	1.000000
67	$ 28,584.90	$ 14.29	$ 1,715.09	$ 515.78	$ 30,830.07	$ -	0.000000	0.000000	0.166600	10.000000	1.000000
71	$ 136.00	$ 0.07	$ 8.16	$ 3.00	$ 147.23	$ -	0.000000	0.000000	2.000000	0.000000	0.000000
70	$ 13,416.00	$ 6.71	$ 804.96	$ 30.00	$ 14,257.67	$ -	0.000000	0.249900	1.000000	1.000000	3.000000
47	$ 0.76	$ -	$ 0.05	$ 0.04	$ 0.85	$ -	0.000000	0.000000	0.000000	0.003200	0.000000
49	$ 0.54	$ 0.16	$ 0.03	$ 0.01	$ 0.73	$ -	0.000000	0.000000	0.000000	0.013000	0.000000
65	$ 100.00	$ 11.11	$ 6.00	$ -	$ 117.11	$ -	0.000000	0.000000	0.000000	1.000000	0.000000
Engineering	*(n/a)*	*(n/a)*	*(n/a)*	*(n/a)*	*(n/a)*	*(n/a)*	*(n/a)*	*(n/a)*	*(n/a)*	*(n/a)*	*(n/a)*
Exempt Material	*(n/a)*	*(n/a)*	*(n/a)*	*(n/a)*	*(n/a)*	*(n/a)*	*(n/a)*	*(n/a)*	*(n/a)*	*(n/a)*	*(n/a)*
Installation	*(n/a)*	*(n/a)*	*(n/a)*	*(n/a)*	*(n/a)*	*(n/a)*	*(n/a)*	*(n/a)*	*(n/a)*	*(n/a)*	*(n/a)*
QwestInstallation	*(n/a)*	*(n/a)*	*(n/a)*	*(n/a)*	*(n/a)*	*(n/a)*	*(n/a)*	*(n/a)*	*(n/a)*	*(n/a)*	*(n/a)*
Splicing	*(n/a)*	*(n/a)*	*(n/a)*	*(n/a)*	*(n/a)*	*(n/a)*	*(n/a)*	*(n/a)*	*(n/a)*	*(n/a)*	*(n/a)*
T&T	*(n/a)*	*(n/a)*	*(n/a)*	*(n/a)*	*(n/a)*	*(n/a)*	*(n/a)*	*(n/a)*	*(n/a)*	*(n/a)*	*(n/a)*
72	$ 2,784.00	$ 1.39	$ 167.04	$ 6.23	$ 2,958.66	$ -	0.000000	0.034572	0.000000	2.075134	0.207513

Collocation: R note Terminal

1	18	19	20	
	Contract Labor Costs			
Collocation Reference ID	Install	Engineer	Exempt Material $ 11.64	Total
60	$ 1,700.00	$ 300.00	0	$ 2,000.0000
59	$ 16.85	$ -	0	$ 16.8465
68	$ 3.04	$ -	0	$ 3.0372
54	$ 0.40	$ -	0.0079	$ 0.4874
55	$ 0.90	$ -	0.019	$ 1.1710
57	$ -	$ -	0.0067	$ 0.3762
61	$ 446.17	$ -	0	$ 446.1651
62	$ 334.65	$ -	0	$ 334.6486
63	$ 186.00	$ -	0	$ 186.0000
64	$ 75.51	$ -	0	$ 75.5131
69	$ 1,952.08	$ -	39.0461	$ 2,512.7367
48	$ -	$ -	0	$ 1,060.0000
56	$ -	$ -	0	$ 106.0000
51	$ -	$ -	2	$ 112.2882
58	$ -	$ -	0	$ 44.5000
50	$ -	$ -	0	$ 2,123.3806
53	$ -	$ -	0	$ 3.3457
52	$ -	$ -	0	$ 0.8360
66	$ -	$ -	0	$ 34,780.8687
67	$ -	$ -	0	$ 31,409.0987
71	$ -	$ -	0	$ 231.2880
70	$ -	$ -	0.0000	$ 14,489.9086
47	$ -	$ -	0	$ 1.0184
49	$ -	$ -	0	$ 1.4206
65	$ -	$ -	0	$ 170.1100
Engineering	*(n/a)*	*(n/a)*	*(n/a)*	*(n/a)*
Exempt Material	*(n/a)*	*(n/a)*	*(n/a)*	*(n/a)*
Installation	*(n/a)*	*(n/a)*	*(n/a)*	*(n/a)*
QwestInstallation	*(n/a)*	*(n/a)*	*(n/a)*	*(n/a)*
Splicing	*(n/a)*	*(n/a)*	*(n/a)*	*(n/a)*
T&T	*(n/a)*	*(n/a)*	*(n/a)*	*(n/a)*
72	$ -	$ -	0	$ 3,078.8997



CHANNEL REGENERATION

SOUTH DAKOTA
June 2002

Study ID: 6504

QWEST CORPORATION
Policy and Law

Table of Contents

	Page
I. Executive Summary	3
A. Purpose Scope, and Application	3
B. Description of Service	3
C. Study Methodology	3
D. Description of Long Run Incremental Costs	3
E. Study Assumptions	4
II. Rate Elements	5
III. Work Papers	6
Study Summary	6
Input Sheet	7
Labor and Materials	10
Regeneration	11
WCP Non-Recurring	12
WCP Recurring	13
WCP Maintenance	15
Input Confiurations	16

Executive Summary

A. PURPOSE, SCOPE, AND APPLICATION

The purpose of this study is to determine the expenses and recurring costs that will be incurred by Qwest to provide Channel Regeneration for customers.

This study develops Qwest average costs. Costs are based on a per unit basis depending upon which element is being requested.

B. DESCRIPTION OF SERVICE

Channel Regeneration is required when the distance from the leased physical space (for Caged or Cageless Physical Collocation) or from the collocated equipment (for Virtual Collocation) to the U S WEST network is of sufficient length to require regeneration.

Cost Elements

- Channel Regeneration - Available as an option when the Co-Provider requests the DS1/DS3 capable loop. This regenerator reshapes and amplifies the DS1/DS3 signal to overcome losses in wiring between electronic equipment within the U S WEST wire center. The losses are a function of cable gauge and length. The DS1/DS3 regenerator Unbundled Network Element (UNE) terminates on the ICDF frame. The DS1/DS3 regenerator can be ordered when the Co-Provider is either combining U S WEST UNEs and/or connecting to their collocated equipment. Costs were calculated using actual regenerator labor and material costs.

C. Study Methodology

Costs were developed from material, engineering and installation labor costs provided by Subject Matter Experts (SME's) in Central Office Engineering and Outside Plant Engineering.

Monthly maintenance costs were developed by taking the element - specific expense and applying the account - code specific maintenance.

The investments/expenses from the above items were then entered into the WCP (Wholesale Cost Program) model, developed and used within U S WEST Communications.

D. DESCRIPTION OF LONG RUN INCREMENTAL COSTS

Long Run Incremental Cost (LRIC) is the method QWEST Corporation uses to estimate product and service costs. It provides a measurement of costs over a period of time long enough to fully adjust to changes of output (including changes in the size of facilities, levels of investment, etc.) in order to optimally accommodate this change. This methodology is forward looking in nature (i.e. LRIC uses the latest technology costs or replacement costs.) Since LRIC is forward looking, it does *not* measure historic investment decisions of the corporation.

The Qwest LRIC format disaggregates the cost results on a unitized basis into the components shown below:

Total Service Long Run Incremental Cost (TSLRIC) --Total Service Long Run Incremental Cost is the forward looking cost avoided (or added) by discontinuing (or offering) an entire service or group of services in the most efficient manner, holding constant the production of all other services produced by the firm. This cost is often referred to in economic terms as direct cost.

Shared Cost (SC)-- The cost associated with the provision of multiple services (service family). This cost is not volume sensitive and is eliminated only if the entire service family is discontinued.

Total Service Long Run Incremental Costs plus Shared Costs (TSLRIC+SC)--The Total Service Long Run Incremental Costs for a service plus the Shared Costs of a family of services.

Total Element Long Run Incremental Cost (TELRIC) -- Total Element Long Run Incremental Cost, as defined by the Federal Communications Commission, is the sum of the forward looking direct cost incurred in the production of a network element (as opposed to an entire service), attributed costs considered as shared cost under TSLRIC terminology and selected administrative costs considered as common under TSLRIC terminology.

Common Cost (CC)

For **TSLRIC** purposes, common costs are the current cost incurred for the benefit of the enterprise as a whole. This cost does not vary with the provision of a service or a service family. These costs are sometimes referred to as *general overhead costs.* The Common Cost added to the TSLRIC + SC produces a **Fully Allocated Cost (FAC)** as required by Commission rules.

For **TELRIC** purposes, common costs are the current cost incurred for the benefit of the enterprise as a whole, after those cost that vary with the provisioning of individual network elements are removed. The costs removed from common for TELRIC purposes are included in the TELRIC itself. **Total Long Run Incremental Cost plus TELRIC common costs (TELRIC + CC)** form the basis for pricing Interconnection network elements. TELRIC + CC is the equivalent of fully allocated cost as the term is applied to network elements.

Typically, the cost identified by these cost categories include capital costs for depreciation, return, and income taxes. TSLRIC also includes ongoing operating costs for: administration expense, product management expense, pre sales expense, and business fees.

E. Study Assumptions

1. All costs are forward looking.
2. See "Inputs" worksheet.

Rate Elements

State: SOUTH DAKOTA			Rate Mapping	
	RC	NRC	RC	NRC
Channel Regeneration (Per Repeater)				
DS1 Regeneration	$ 12.97		='R - WCP Recurring'!$C$69+'R	
DS3 Regeneration	$ 47.29		='R - WCP Recurring'!$D$69+'R	

Channel Regeneration

Study Name	*CHANNEL REGENERATION*	
Study Requester	*Vicki Bishara*	
Type of Study	*TELRIC*	
Study ID	*6504*	
Cost Factor Group	*Interconnection*	
Study Applications		
Completion Date	*June 13, 2002*	
Cost Analyst	*Tom Wilkinson*	
Study Review	**Reviewer**	**Date**
	Vicki Bishara	*June 13, 2002*
Cost Models Used	**Model**	**Version and/or Release Date**
	Wholesale Cost Program	*01/08/01 (Version 2.08)*
	Cost Factor Databases	*01/02/01 (Vintage: 02SD01E)*
	Cost Factors Model (TELRIC)	
Cost Factors Used	**Factor**	**Effective Date**
	Capital Recovery	*04/02*
	Maintenance	*02/02*
	Ad Valorem	*02/02*
	Power	*01/01*
	Sales Tax	*01/01*
	Interest During Construction	*01/01*
	COE Land & Bldg	*02/02*
	Directly Assigned Factors	*04/02*
	Directly Attributable Factors	*04/02*
	Common	*04/02*
	Cost Of Money	*10.14%*
Inflation		
Major Cost Drivers		

Inputs

Study Information	Value
Filing Month	June
Filing Year	2002
State	SD
State Full Name	SOUTH DAKOTA
Run Date	6/13/02
Vintage	*02SD01E*
Study ID	6504

Model Assumptions	Value	Source
Work Completion Interval	90	
USWI Labor Percent	*69%*	
DS1 Repeaters Utilization		
Repeater Bay	70%	SME
Repeater Shelf	70%	SME
Repeater Card	100%	SME
Connecting Cable	70%	SME
Shelves per Bay	11	SME
Repeaters Per Shelf	28	SME
DS3 Repeaters Utilization		
Repeater Bay	70%	SME
Repeater Shelf	70%	SME
Repeater Card	100%	SME
Connecting Cable	100%	SME
Shelves per Bay	11	SME
Repeaters Per Shelf	16	SME

Labor Rate Inputs	Value	Source
Connecting Cable DS1 Repeaters	*$ 65.01*	= Labor Rates line 27
Place connector	*$ 4.44*	= Labor Rates line 15

Configuration Inputs	Value	Source
Material Cost		
7' DS1 Repeater Bay Finished Services (5-5-5)	$ 4,610.78	= 'Input - Configurations'
DS1 Unloaded Repeater Chassis 28 Positions	$ 261.46	= 'Input - Configurations'
DS1 Module for Finished Service Repeater	$ 233.16	= 'Input - Configurations'
7' DS3 Repeater Bay Finished Services (5-5-5)	$ 6,027.80	= 'Input - Configurations'
DS3 Unloaded Repeater Chassis 28 Positions	$ 431.47	= 'Input - Configurations'
DS3 Module for Finished Service	$ 1,192.76	= 'Input - Configurations'
Engineering Labor Cost		
7' DS1 Repeater Bay Finished Services (5-5-5)	$ 601.11	= 'Input - Configurations'
DS1 Unloaded Repeater Chassis 28 Positions	$ 106.00	= 'Input - Configurations'
DS1 Module for Finished Service Repeater	$ 106.00	= 'Input - Configurations'
7' DS3 Repeater Bay Finished Services (5-5-5)	$ 601.11	= 'Input - Configurations'
DS3 Unloaded Repeater Chassis 28 Positions	$ 190.06	= 'Input - Configurations'
DS3 Module for Finished Service	$ 106.00	= 'Input - Configurations'

Collocation Model Inputs	Value	Source
Power Adjustment		
Power Maint Expense Adj	0.003266	G. Investment Factors

Factors	Value
WCP Version	2.08
Cost of Money	10.14%
Capital Recovery	04/02
Maintenance	02/02
Ad Valorem	02/02
Power	01/01
Sales Tax	01/01
Interest During Construction	01/01
COE Land & Bldg	02/02
Directly Assigned Factors	04/02
Directly Attributable Factors	04/02
Common	04/02
Vintage	*02SD01E*
Investment Loadings	
Power	0.069700
Sales Tax	0.056400
Interest During Construction	0.006100
COE Land And Building Investment	
Building	0.199833
Land	0.003732
Investment Based Monthly Direct Costs	
Depreciation	0.109717
Cost Of Money	0.045455
Income Tax Expense	0.017189
Maintenance	0.025490
Ad Valorem Tax	0.009546
COE Land And Building Cost	
COE Building	0.151319
COE Land	0.155318
Directly Assigned	
Product Management Expense	0.019957
Sales Expense	0.011877
Product Advertising Expense	0.000000
Business Fees (Other Operating Taxes)	0.001483
Directly Attributed	
Network Operations	0.034832
Network Support Assets	0.014703
General Support Assets	0.088742
General Purpose Computers	0.043342
Uncollectible	0.003786
Accounting & Finance Expense	0.007346
Human Resources Expense	0.008294
Information Management Expense	0.070887
Intangibles	0.000000
State Prescribed Directly Attributed	0.000000
Common	
Executive Expense	0.011267
Planning Expense	0.000525
External Relations Expense	0.037846
Legal Expense	0.004717
Other Procurement Expense	0.001860
Research & Development Expense	0.000006
Other General and Admin Expense	0.015064
State Prescribed Common	0.000000

Repeater Labor and Materials

DS1 Repeaters	**(11 shelves per bay; 28 repeaters per shelf)**		
Repeater Bay			
Material	$ 4,610.78		**11 shelves**
Labor	$ 601.11		**28 repeaters**
Total		**$ 5,211.89**	
Repeater Shelf			
Material	$ 261.46		
Labor	$ 106.00		
Total		**$ 367.46**	
Repeater Card			
Material	$ 233.16		
Labor	$ 106.00		
Total		**$ 339.16**	
DS3 Repeaters	**(11 shelves per bay; 16 repeaters per shelf)**		
Repeater Bay			
Material	$ 6,027.80		**11 shelves**
Labor	$ 601.11		**16 repeaters**
Total		**$ 6,628.91**	
Repeater Shelf			
Material	$ 431.47		
Labor	$ 190.06		
Total		**$ 621.53**	
Repeater Card			
Material	$ 1,192.76		
Labor	$ 106.00		
Total		**$ 1,298.76**	

Regeneration Costs, Per Repeater

Element	Description	Material + Labor	Unit Capacity	Material + Labor per Unit of Capacity	Units of Capacity Required	Avg. Feet	Total Material + Labor	Utilization Factor	Investment or Direct Expense
		A	B	C=A/B	D	E	F=CXDXE	G	H=F/G
DS1 REPEATERS - RECURRING									
Repeater Bay		$ 5,211.89	308	$ 16.92	1	N/A	$ 16.92	70%	$ 24.17
Repeater Shelf		$ 367.46	28	$ 13.12	1	N/A	$ 13.12	70%	$ 18.75
Repeater Card		$ 339.16	1	$ 339.16	1	N/A	$ 339.16	100%	$ 339.16
Connecting Cable		$ 65.01	28	$ 2.32	2	N/A	$ 4.64	70%	$ 6.63
Total per DS1 Regenerator - Recurring									**$ 388.71**
DS3 REPEATERS RECURRING									
Repeater Bay		$ 6,628.91	176	$ 37.66	1	N/A	$ 37.66	70%	$ 53.81
Repeater Shelf		$ 621.53	16	$ 38.85	1	N/A	$ 38.85	70%	$ 55.49
Repeater Card		$ 1,298.76	1	$ 1,298.76	1	N/A	$ 1,298.76	100%	$ 1,298.76
Connecting Cable		$ 4.44	1	$ 4.44	2	N/A	$ 8.87	100%	$ 8.87
Total per DS3 Regenerator - Recurring									**$ 1,416.93**

WCP Recurring

	Factor Value	DS1 Chan Regen Cost	DS3 Chan Regen Cost
Investment		$ 388.71	$ 1,416.93
Investment Loadings			
Power	0.069700	$ 27.09	$ 98.76
Sales Tax	0.056400	$ 23.45	$ 85.48
Interest During Construction	0.006100	$ 24.85	$ 90.59
Loaded Investment		$ 464.11	$ 1,691.77
COE Land And Building Investment			
Building	0.199833	$ 92.74	$ 338.07
Land	0.003732	$ 1.73	$ 6.31
Investment With COE Land And Bldg		$ 558.59	$ 2,036.16
Investment Based Monthly Direct Costs			
Depreciation	0.109717	$ 4.24	$ 15.47
Cost Of Money	0.045455	$ 1.76	$ 6.41
Income Tax Expense	0.017189	$ 0.66	$ 2.42
Maintenance	0.025490	$ 0.99	$ 3.59
Ad Valorem Tax	0.009546	$ 0.37	$ 1.35
Investment Based Monthly Direct Costs		$ 8.02	$ 29.24
COE Land And Building Cost			
COE Building	0.151319	$ 1.17	$ 4.26
COE Land	0.155318	$ 0.02	$ 0.08
COE Land And Building Monthly Costs		$ 1.19	$ 4.34
Total Investment Based Monthly Costs		$ 9.21	$ 33.58
Directly Assigned			
Product Management Expense	0.019957	$ 0.18	$ 0.67
Sales Expense	0.011877	$ 0.11	$ 0.40
Product Advertising Expense	0.000000	$ -	$ -
Business Fees (Other Operating Taxes)	0.001483	$ 0.01	$ 0.05
Directly Assigned Monthly Costs		$ 0.31	$ 1.12
Total Direct Monthly Costs		$ 9.52	$ 34.70

Channel Regeneration

WCP Recurring

	Factor Value	DS1 Chan Regen Cost	DS3 Chan Regen Cost
Directly Attributed			
Network Operations	0.034832	$ 0.33	$ 1.21
Network Support Assets	0.014703	$ 0.14	$ 0.51
General Support Assets	0.088742	$ 0.84	$ 3.08
General Purpose Computers	0.043342	$ 0.41	$ 1.50
Uncollectible	0.003786	$ 0.04	$ 0.13
Accounting & Finance Expense	0.007346	$ 0.07	$ 0.25
Human Resources Expense	0.008294	$ 0.08	$ 0.29
Information Management Expense	0.070887	$ 0.67	$ 2.46
Intangibles	0.000000	$ -	$ -
State Prescribed Directly Attributed	0.000000	$ -	$ -
Total Directly Attributed Monthly Costs		$ 2.59	$ 9.44
TELRIC		$ 12.11	$ 44.14
Common			
Executive Expense	0.011267	$ 0.1364	$ 0.4973
Planning Expense	0.000525	$ 0.0064	$ 0.0232
External Relations Expense	0.037846	$ 0.4583	$ 1.6705
Legal Expense	0.004717	$ 0.0571	$ 0.2082
Other Procurement Expense	0.001860	$ 0.0225	$ 0.0821
Research & Development Expense	0.000006	$ 0.0001	$ 0.0003
Other General and Admin Expense	0.015064	$ 0.1824	$ 0.6649
State Prescribed Common	0.000000	$ -	$ -
Common Costs		$ 0.86	$ 3.15
TELRIC + Common Costs		$ 12.97	$ 47.29

Channel Regeneration

Regeneration Costs

1	2	3	4	5	6	7	8	9	10	11
						Material Costs				
Collocation Reference ID	Title	Unit of Measure	FRC	Suffix	Ntwk Cost per Unit	Supplier Contract	BRI Load	Sales Tax	Shipping	Total Mat. Cost
3	7' DS1 Repeater Bay Finished Services (5-5-5)	Each	357	C		$ 4,112.00	$ 2.06	$ 246.72	$ 250.00	$ 4,610.78
1	DS1 Unloaded Repeater Chassis 28 Positions	Each	257	C		$ 227.50	$ 0.11	$ 13.85	$ 20.00	$ 261.46
2	DS1 Module for Finished Service Repeater	Each	257	C		$ 215.14	$ 0.11	$ 12.91	$ 5.00	$ 233.16
6	7' DS3 Repeater Bay Finished Services (5-5-5)	Each	257	C		$ 5,683.92	$ 2.84	$ 341.04	$ -	$ 6,027.80
4	DS3 Unloaded Repeater Chassis 28 Positions	Each	257	C		$ 388.00	$ 0.19	$ 23.28	$ 20.00	$ 431.47
5	DS3 Module for Finished Service	Each	257	C		$ 1,120.00	$ 0.56	$ 67.20	$ 5.00	$ 1,192.76

Channel F[illegible]eneration

ıtion Costs

2	12	13	14	15	16	17	18	19	20	
		Qwest Labor Costs					Contract Labor Costs			
Title	Softwr RTU	Line $ 48.55	Splice $ 44.50	Install $ 42.03	Engrg $ 53.00	T&T $ 42.03	Install	Engineer	Exempt Material $ 11.64	Total
7' DS1 Repeater Bay Finished Services (5-5-5)	$ -	1.0000	1.0000	1.0000	8.0000	1.0000	$ -	$ -	0.0000	$ 5,211.8860
DS1 Unloaded Repeater Chassis 28 Positions	$ -	0.0000	0.0000	0.0000	2.0000	0.0000	$ -	$ -	0.0000	$ 367.4638
DS1 Module for Finished Service Repeater	$ -	0.0000	0.0000	0.0000	2.0000	0.0000	$ -	$ -	0.0000	$ 339.1560
7' DS3 Repeater Bay Finished Services (5-5-5)	$ -	1.0000	1.0000	1.0000	8.0000	1.0000	$ -	$ -	0.0000	$ 6,628.9072
DS3 Unloaded Repeater Chassis 28 Positions	$ -	0.0000	0.0000	2.0000	2.0000	0.0000	$ -	$ -	0.0000	$ 621.5340
DS3 Module for Finished Service	$ -	0.0000	0.0000	0.0000	2.0000	0.0000	$ -	$ -	0.0000	$ 1,298.7600



Direct CLEC to CLEC Interconnection

SOUTH DAKOTA
June 2002

Study ID: 6505

QWEST CORPORATION
Policy and Law

Table of Contents

	Page
I. Executive Summary	3
A. Purpose Scope, and Application	3
B. Description of Service	4
C. Study Methodology	4
D. Description of Long Run Incremental Costs	4
E. Study Assumptions	4
II. Rate Elements	5
III. Work Papers	6
Study Summary	6
Inputs	7
Engineering	10
Cable Racking	11
Cable Connections	12
Cable Hole	13
WCP Non-Recurring	14
WCP Recurring	16
WCP Maintenance	18

Executive Summary

A. PURPOSE, SCOPE, AND APPLICATION

The purpose of this study is to determine the expenses and recurring costs that will be incurred by Qwest to provide Direct CLEC to CLEC Interconnection for customers.

This study develops Qwest average costs. Costs are based on a per unit basis depending upon which element is being requested.

The costs developed in this study can be used for developing pricing for customer - requested items.

Costs are depicted as follows:
- Non-Recurring Caged and Cageless
- Monthly Recurring Caged and Cageless

B. DESCRIPTION OF SERVICE

This service is used to connect together multiple forms of CLECs own collocations within the same Qwest Central Office, i.e., physical to physical, physical to virtual, virtual to virtual, or non-contiguous cageless bays.

Cost Elements

- **Flat Charge** - Includes the design and engineering hours required for the copper, CLEC to CLEC job and 20' of new cable racking weighted at 5% of the time shared by three CLECs. *No cable material or placement costs are included in this rate.*
- **Fiber Flat Charge** - Includes the design and engineering hours required for the fiber, CLEC to CLEC job and 10' of new cable racking weighted at 90% of the time shared by three CLECs. *No cable material or placement costs are included in this rate.*
- **Cable Racking** - Includes the per foot, cable racking charges for DS0, DS1, DS3 and fiber. *No cable material or placement costs are included in this rate.*
- **Virtual Connections** - Includes the virtual cable connection charges for DS0, DS1, and DS3. *No cable material or placement costs are included in this rate.* The DS0 Virtual Connection charge is per 100 connections. The DS1 Virtual Connection charge is per 28 connections. The DS3 Virtual Connection charge is per 1 connection. This charge is only applicable if the job consists of one or more virtual collocations. The CLEC/DLEC will provide the connection labor for jobs consisting of physical collocation(s). If the job is a CLEC to CLEC Direct Connect consisting of two virtual collocations, the applicable Virtual Connection charge will be applied twice. If the job is a CLEC to CLEC Direct Connect consisting of two physical collocations, the applicable Virtual Connection charge will be zero.
- **Cable Hole** - Includes the per occurance, cable hole charges required to open and close the cable hole between floors. *No cable material or placement costs are included in this rate.*

C. Study Methodology

The costs were developed from material, engineering and installation labor costs provided by Subject Matter Experts (SME's) in Central Office Engineering and Outside Plant Engineering. *(No cable material or placement costs are included in this study.)*

Monthly maintenance costs were developed by taking the element - specific expense and applying the account - code specific maintenance.

The investments/expenses from the above items were then entered into the WCP (Wholesale Cost Program) model, developed and used within Qwest.

Executive Summary

D. DESCRIPTION OF LONG RUN INCREMENTAL COSTS

Long Run Incremental Cost (LRIC) is the method Qwest uses to estimate product and service costs. It provides a measurement of costs over a period of time long enough to fully adjust to changes of output (including changes in the size of facilities, levels of investment, etc.) in order to optimally accommodate this change. This methodology is forward looking in nature (i.e. LRIC uses the latest technology costs or replacement costs.) Since LRIC is forward looking, it does *not* measure historic investment decisions of the corporation.

The Qwest LRIC format disaggregates the cost results on a unitized basis into the components shown below:

Total Service Long Run Incremental Cost (TSLRIC) --Total Service Long Run Incremental Cost is the forward looking cost avoided (or added) by discontinuing (or offering) an entire service or group of services in the most efficient manner, holding constant the production of all other services produced by the firm. This cost is often referred to in economic terms as direct cost.

Shared Cost (SC)-- The cost associated with the provision of multiple services (service family). This cost is not volume sensitive and is eliminated only if the entire service family is discontinued.

Total Service Long Run Incremental Costs plus Shared Costs (TSLRIC+SC)--The Total Service Long Run Incremental Costs for a service plus the Shared Costs of a family of services.

Total Element Long Run Incremental Cost (TELRIC) -- Total Element Long Run Incremental Cost, as defined by the Federal Communications Commission, is the sum of the forward looking direct cost incurred in the production of a network element (as opposed to an entire service), attributed costs considered as shared cost under TSLRIC terminology and selected administrative costs considered as common under TSLRIC terminology.

Common Cost (CC)

For **TSLRIC** purposes, common costs are the current cost incurred for the benefit of the enterprise as a whole. This cost does not vary with the provision of a service or a service family. These costs are sometimes referred to as *general overhead costs.* The Common Cost added to the TSLRIC + SC produces a **Fully Allocated Cost (FAC)** as required by Commission rules.

For **TELRIC** purposes, common costs are the current cost incurred for the benefit of the enterprise as a whole, after those cost that vary with the provisioning of individual network elements are removed. The costs removed from common for TELRIC purposes are included in the TELRIC itself. **Total Long Run Incremental Cost plus TELRIC common costs (TELRIC + CC)** form the basis for pricing Interconnection network elements. TELRIC + CC is the equivalent of fully allocated cost as the term is applied to network elements.

Typically, the cost identified by these cost categories include capital costs for depreciation, return, and income taxes. TSLRIC also includes ongoing operating costs for: administration expense, product management expense, pre sales expense, and business fees.

E. Study Assumptions

1. All cost are forward looking.
2. See "Input Sheet" worksheet on page 7.

Direct CLEC to CLEC Interconnection

Rate Elements

CLEC to CLEC Direct Connections	RC	NRC	Rate Mapping NRC	Rate Mapping RC
Flat Charge (Design Engineering & Installation - NO CABLES.)		$ 622.55	Engineering!$E$8+'Cable Racking'!$F$24	
Fiber Flat Charge (Design Engineering & Installation - NO CABLES.)		$ 1,265.88	Engineering!$E$8+'Cable Racking'!$F$29	
Cable Racking (per foot, per cable)				
DS0	$ 0.18445			Cable Racking'!$G$26+'Cable Racking'!$G$45
DS1	$ 0.19724			Cable Racking'!$G$27+'Cable Racking'!$G$46
DS3	$ 0.16761			Cable Racking'!$G$28+'Cable Racking'!$G$47
Fiber	$ 1.52558			Cable Racking'!$G$29+'Cable Racking'!$G$48
Virtual Connections (if applicable - Connections only; NO CABLES.)				
DS0 (per 100 connections)		$ 195.47	Cable Connections'!$G$7	
DS1 (per 28 connections)		$ 91.54	Cable Connections'!$G$12	
DS3 (per 1 connection)		$ 6.25	Cable Connections'!$G$17	
Cable Hole (if applicable)		$ 470.49	Cable Hole'!$E$12	

NOTE: CLEC/DLEC must supply and place cables.
No cable material or placement costs are included in these rates.

Direct CLEC to CLEC Interconnection

Study Name	*Direct CLEC to CLEC Interconnection*	
Study Requester	*Vicki Bishara*	
Type of Study	*TELRIC*	
Study ID	*6505*	
Cost Factor Group	*Interconnection*	
Study Applications		
Completion Date	*June 13, 2002*	
Cost Analyst	*Tom Wilkinson*	
Study Review	**Reviewer**	**Date**
	Vicki Bishara	*June 13, 2002*
Cost Models Used	**Model**	**Version and/or Release Date**
	Wholesale Cost Program	*01/08/01 (Version 2.08)*
	Cost Factor Databases	*01/02/01 (Vintage: 02SD01E)*
	Cost Factors Model (TELRIC)	
Cost Factors Used	**Factor**	**Effective Date**
	Capital Recovery	*04/02*
	Maintenance	*02/02*
	Ad Valorem	*02/02*
	Power	*01/01*
	Sales Tax	*01/01*
	Interest During Construction	*01/01*
	COE Land & Bldg	*02/02*
	Directly Assigned Factors	*04/02*
	Directly Attributable Factors	*04/02*
	Common	*04/02*
	Cost Of Money	*10.14%*
Inflation		
Major Cost Drivers		

Direct CLEC to CLEC Interconnection

Study Information

	Value
Filing Month	June
Filing Year	2002
State	SD
State Full Name	SOUTH DAKOTA
Run Date	6/13/02
Factor Vintage	*02SD01E*
Study ID	6505

Model Assumptions

	Value	Description/Source
General		
Shipping Rate	13.99%	
Tax on Labor	*Yes*	
Work Completion Interval	90	
USWI Labor Percent	*69%*	
Specific		
Engineering Hours Override (Total)	**8**	
CPMC Hours	1	Network
Engineering Hours	5	Network
SICM Walk-thru	1	Network
P70-Quality Inspec./Install. Hours	1	Network
Percent New Cable Racking Required	5%	Network
Average Length (in feet) of New Cable Rack Placement	20	Network
Types of CLEC to CLEC connections		
Virtual to Virtual	2	connections made by QWEST
Virtual to Physical	1	connection made by QWEST
Physical to Physical	0	no connections made by QWEST
Types of CLEC to CLEC service		
New Cable Racking Cable Capacity	3	
Fiber Expense Per Foot Per Cable	$ 60.00	SME
New Cable Racking Fill	100%	
Existing Cable Racking Fill	70%	
Engineering Labor Rate	$ 51.76	per hour
Infrastructure Availability Center Labor Rate	$ 56.97	per hour
State Interconnection Manager (SICM)	$ 69.25	per hour
P70-Quality Inspec./Install. Labor Rate	$ 49.32	per hour

Collocation Model Inputs

		Value	Source
Aerial Support			**Collocation Model**
Grand Total Overall Aerial Support-90 day - Major	*$*	*8,478.12*	E. 2.1 & 3.1 Aerial Support
Grand Total Overall Aerial Support-90 day - Minor	*$*	*855.71*	E. 2.1 & 3.1 Aerial Support
Number of Channels - Major		*9.5*	D. Defaults and Overrides - Number of Channels
Number of Channels - Minor		*1.3*	D. Defaults and Overrides - Number of Channels
% of Offices that Require Major Aerial Support		*50%*	E. 2.1 & 3.1 Aerial Support
Overall Aerial Support for 10' of Cable Rack	*$*	*775.34*	=((E41/E43)+(E42/E44))*E45
Cable Racking			**Collocation Model**
Grand Total Cable Racking -90 day - Major	*$*	*7,031.41*	E. 2.1 & 3.1 Cable Racking
Grand Total Cable Racking -90 day - Minor	*$*	*1,476.60*	E. 2.1 & 3.1 Cable Racking
Number of 10' Cable Racking Sections - Major		*9.5*	D. Defaults and Overrides - Number of Channels
Number of 10' Cable Racking Sections - Minor		*1.3*	D. Defaults and Overrides - Number of Channels
% of Offices that Require Major Aerial Support		*50%*	E. 2.1 & 3.1 Cable Racking
Weighted 10' Section of Cable Racking	*$*	*938.00*	=((E48/E50)+(E49/E51))*E52
ITP			**Collocation Model**
DS0 Capacity Per Rack		*219*	=E. 1.7 ITP

Direct CLEC to CLEC Interconnection

DS1 Capacity Per Rack		322	=E. 1.7 ITP
DS3 Capacity Per Rack		833	=E. 1.7 ITP
DS3 Capacity Per Rack		42	SME
Defaults and Overrides			**Collocation Model**
Expense per DS0 Cable Foot	$	1.45	=D. Defaults and Overrides
Expense per DS1 Cable Foot	$	1.13	=D. Defaults and Overrides
Expense per DS3 Cable Foot	$	0.89	=D. Defaults and Overrides
Cable Hole			**Collocation Model**
Total 90 Day Labor Expense	$	207.91	=E. 2.1 Cable Hole
			='E. 2.1 Cable Hole', Sum of "Other"& Fire Hole
Total Material Expense	$	95.71	Material Expense
Power Adjustment			**Collocation Model**
Power Maint Expense Adj		0.003266	G. Investment Factors

Labor Rate Inputs

		Value	Source
Placement, per foot (2, 50-pair cables)	$	2.09	='Labor Rates'!$R$18
Each Additional Placement, per foot (2, 50-pair cable)	$	1.75	='Labor Rates'!$R$19
Placement, per foot (1, 28-pair cable set)	$	2.26	='Labor Rates'!$R$11
Each Additional Placement, per foot (1, 28-pair cable set)	$	1.91	='Labor Rates'!$R$12
Placement, per foot (1 Coax Cable)	$	2.19	='Labor Rates'!$R$13
Each Additional Placement, per foot (1 Coax Cable)	$	1.89	='Labor Rates'!$R$14
Per 100-pair Connection	$	138.82	='Labor Rates'!$R$29
Per 28-pair Connection	$	65.01	='Labor Rates'!$R$27
Per 1 Coax Connection	$	4.44	='Labor Rates'!$R$15

Factors

	Value
WCP Version	2.08
Cost of Money	10.14%
Capital Recovery	04/02
Maintenance	02/02
Ad Valorem	02/02
Power	01/01
Sales Tax	01/01
Interest During Construction	01/01
COE Land & Bldg	02/02
Directly Assigned Factors	04/02
Directly Attributable Factors	04/02
Common	04/02
Vintage	02SD01E
Investment Loadings	
Power	0.069700
Sales Tax	0.056400
Interest During Construction	0.006100
COE Land And Building Investment	
Building	0.199833
Land	0.003732
Investment Based Monthly Direct Costs	
Depreciation	0.109717
Cost Of Money	0.045455
Income Tax Expense	0.017189
Maintenance	0.025490
Ad Valorem Tax	0.009546
COE Land And Building Cost	
COE Building	0.151319
COE Land	0.155318

Direct CLEC to CLEC Interconnection

Marketing & Business Fees	
Product Management Expense	*0.019957*
Sales Expense	*0.011877*
Product Advertising Expense	*0.000000*
Business Fees (Other Operating Taxes)	*0.001483*
Other Direct Expenses	
Network Operations	*0.034832*
Network Support Assets	*0.014703*
General Support Assets	*0.088742*
General Purpose Computers	*0.043342*
Uncollectible	*0.003786*
Accounting & Finance Expense	*0.007346*
Human Resources Expense	*0.008294*
Information Management Expense	*0.070887*
Intangibles	*0.000000*
State Prescribed Directly Attributed	*0.000000*
Common	
Executive Expense	*0.011267*
Planning Expense	*0.000525*
External Relations Expense	*0.037846*
Legal Expense	*0.004717*
Other Procurement Expense	*0.001860*
Research & Development Expense	*0.000006*
Other General and Admin Expense	*0.015064*
State Prescribed Common	*0.000000*

Engineering

CPMC Hours	1.00		
Expense/Unit	$ 56.97		
		$	56.97
Infrastructure Availability Center Hours	5.00		
Expense/Unit	$ 51.76		
		$	258.80
Quality Inspection Hours	1.00		
Expense/Unit	$ 69.25		
		$	69.25
Quality Inspection Hours	1.00		
Expense/Unit	$ 49.32		
		$	49.32
Total Expense		**$**	**385.02**
Total Loaded Cost		**$**	**542.13**

ENGINEERING REQUIREMENTS

Collocation Project Management Center — **HOURS: 1.0**
- Application Verification
- Date Set
- Project Management

Common Systems Planning Engineering Center — **HOURS: 5.0**
- Initialize Billing Authorization Number
- Obtain Funding Authorization
- Prepare Engineering Package

CPD

& Engineering
- Field Engineering Walk Through
- Structure Verification
- Complete Walk Through Report
- Update Design Work Package
- Update Engineering Prints

Forms/Follow-up — **HOURS: 2.0**
- Quality Check
- SICM/ATR Cable Route Walk Through

Cable Racking

	Material & Labor per Bay	Feet per Section	Expense per Foot
Aerial Support	$ 775.34	10.00	$ 77.53
Cable Rack (per 10' section)	$ 938.00	10.00	$ 93.80
			$ 171.33

New Cable Racking

Cable Type	Number of CLECs	Expense Per Foot per Cable	Fill	Cost Per Foot per CLEC
DS0	3	**$ 57.11**	100%	**$ 57.11**
DS1	3	**$ 57.11**	100%	**$ 57.11**
DS3	3	**$ 57.11**	100%	**$ 57.11**
Fiber	3	**$ 57.11**	100%	**$ 57.11**

Assumptions	DS-x	Fiber
Percent New Cable Racking Required	**5%**	**90%**
Average Length (in feet) of New Cable Rack Placement	**20**	**10**

Expense	
Total DS0 Per Foot Expense	**$ 57.11**
Total DS1 Per Foot Expense	**$ 57.11**
Total DS3 Per Foot Expense	**$ 57.11**
Total Fiber Expense	**$ 514.00**

Loaded	Non-Recurring	Recurring
DS0 Cable Racking	**$ 80.42**	**$ 0.14893**
DS1 Cable Racking	**$ 80.42**	**$ 0.14893**
DS3 Cable Racking	**$ 80.42**	**$ 0.14893**
Fiber Cable Racking	**$ 723.75**	**$ 1.34037**

Existing Cable Racking

Cable	Cable Capacity	Expense Per Foot per Cable	Fill	Cost Per Foot per Cable
DS0	219	**$ 0.78**	70%	**$ 1.12**
DS1	161	**$ 1.06**	70%	**$ 1.52**
DS3	417	**$ 0.41**	70%	**$ 0.59**
Fiber	42	**$ 4.08**	70%	**$ 5.83**

Expense	
Total DS0 Per Foot Expense	**$ 1.12**
Total DS1 Per Foot Expense	**$ 1.52**
Total DS3 Per Foot Expense	**$ 0.59**
Total Fiber Per Foot Expense	**$ 5.83**

Loaded	Non-Recurring	Recurring
DS0 Cable Racking (per foot)	-	**$ 0.03552**
DS1 Cable Racking (per foot)	-	**$ 0.04831**
DS3 Cable Racking (per foot)	-	**$ 0.01868**
Fiber Cable Racking (per foot)	-	**$ 0.18521**

Cable Connections

NOTE: Qwest provides Cable Connections for Virtual Collocations only.

DS0		Labor	Quantity	Total	
	Per 100-pair Connection	$ 138.82	1.00	$ 138.82	
	Total Connection Expense				**$ 138.82**
	Loaded				**$ 195.47**

DS1					
	Per 28-pair Connection	$ 65.01	1.00	$ 65.01	
	Total Connection Expense				**$ 65.01**
	Loaded				**$ 91.54**

DS3					
	Per 1 Coax Connection	$ 4.44	$ 1.00	$ 4.44	
	Total Connection Expense				**$ 4.44**
	Loaded				**$ 6.25**

Cable Hole

(For Cable Hole detail, see Collocation Model)

Total 90 Day Labor Expense	$ 207.91	(see Inputs)
Total Material Expense	$ 95.71	(see Inputs)
	$ 303.63	
Shipping	$ 13.39	
Sales Tax	$ 17.12	
Cable Hole Total		$ 334.14

Total Connection Expense	$ 334.14
Loaded	**$ 470.49**

WCP Non-Recurring

	Factor Value	Engineering Cost	Cable Racking DS0	Cable Racking DS1	Cable Racking DS3	Cable Racking Fiber	Connections DS0	Connections DS1
Expense		$ 385.02	$ 57.11	$ 57.11	$ 57.11	$ 514.00	$ 138.82	$ 65.01
Marketing & Business Fees								
Product Management Expense	0.019957	$ 7.68	$ 1.14	$ 1.14	$ 1.14	$ 10.26	$ 2.77	$ 1.30
Sales Expense	0.011877	$ 4.57	$ 0.68	$ 0.68	$ 0.68	$ 6.10	$ 1.65	$ 0.77
Product Advertising Expense	0.000000	$ -	$ -	$ -	$ -	$ -	$ -	$ -
Business Fees (Other Operating Taxes)	0.001483	$ 0.59	$ 0.09	$ 0.09	$ 0.09	$ 0.79	$ 0.21	$ 0.10
Marketing & Business Fees Total		$ 12.85	$ 1.91	$ 1.91	$ 1.91	$ 17.15	$ 4.63	$ 2.17
Sub-Total Invst., B&C, Marketing		$ 397.87	$ 59.02	$ 59.02	$ 59.02	$ 531.15	$ 143.45	$ 67.18
Other Direct Expenses								
Network Operations	0.034832	$ 13.86	$ 2.06	$ 2.06	$ 2.06	$ 18.50	$ 5.00	$ 2.34
Network Support Assets	0.014703	$ 5.85	$ 0.87	$ 0.87	$ 0.87	$ 7.81	$ 2.11	$ 0.99
General Support Assets	0.088742	$ 35.31	$ 5.24	$ 5.24	$ 5.24	$ 47.14	$ 12.73	$ 5.96
General Purpose Computers	0.043342	$ 17.24	$ 2.56	$ 2.56	$ 2.56	$ 23.02	$ 6.22	$ 2.91
Uncollectible	0.003786	$ 1.51	$ 0.22	$ 0.22	$ 0.22	$ 2.01	$ 0.54	$ 0.25
Accounting & Finance Expense	0.007346	$ 2.92	$ 0.43	$ 0.43	$ 0.43	$ 3.90	$ 1.05	$ 0.49
Human Resources Expense	0.008294	$ 3.30	$ 0.49	$ 0.49	$ 0.49	$ 4.41	$ 1.19	$ 0.56
Information Management Expense	0.070887	$ 28.20	$ 4.18	$ 4.18	$ 4.18	$ 37.65	$ 10.17	$ 4.76
Intangibles	0.000000	$ -	$ -	$ -	$ -	$ -	$ -	$ -
State Prescribed Directly Attributed	0.000000	$ -	$ -	$ -	$ -	$ -	$ -	$ -
Total Other Direct Expenses		$ 108.19	$ 16.05	$ 16.05	$ 16.05	$ 144.44	$ 39.01	$ 18.27
TELRIC		$ 506.06	$ 75.07	$ 75.07	$ 75.07	$ 675.59	$ 182.46	$ 85.45

Loading Calculations *(continued)*

Common									
Executive Expense	**0.011267**	**$ 5.70**	**$ 0.85**	**$ 0.85**	**$ 0.85**	**$ 7.61**	**$ 2.06**	**$ 0.96**	
Planning Expense	**0.000525**	**$ 0.27**	**$ 0.04**	**$ 0.04**	**$ 0.04**	**$ 0.35**	**$ 0.10**	**$ 0.04**	
External Relations Expense	**0.037846**	**$ 19.15**	**$ 2.84**	**$ 2.84**	**$ 2.84**	**$ 25.57**	**$ 6.91**	**$ 3.23**	
Legal Expense	**0.004717**	**$ 2.39**	**$ 0.35**	**$ 0.35**	**$ 0.35**	**$ 3.19**	**$ 0.86**	**$ 0.40**	
Other Procurement Expense	**0.001860**	**$ 0.94**	**$ 0.14**	**$ 0.14**	**$ 0.14**	**$ 1.26**	**$ 0.34**	**$ 0.16**	
Research & Development Expense	**0.000006**	**$ 0.00**	**$ 0.00**	**$ 0.00**	**$ 0.00**	**$ 0.00**	**$ 0.00**	**$ 0.00**	
Other General and Admin Expense	**0.015064**	**$ 7.62**	**$ 1.13**	**$ 1.13**	**$ 1.13**	**$ 10.18**	**$ 2.75**	**$ 1.29**	
State Prescribed Common	**0.000000**	**$ -**	**$ -**	**$ -**	**$ -**	**$ -**	**$ -**	**$ -**	
Common Costs		**$ 36.07**	**$ 5.35**	**$ 5.35**	**$ 5.35**	**$ 48.16**	**$ 13.01**	**$ 6.09**	
TELRIC + Common Costs		**$ 542.13**	**$ 80.42**	**$ 80.42**	**$ 80.42**	**$ 723.75**	**$ 195.47**	**$ 91.54**	

Direct CLEC to CLEC Interconnection

WCP Non-Recurring

	Factor Value	Connections DS3	Cable Hole
Expense		$ 4.44	$ 334.14
Marketing & Business Fees			
Product Management Expense	0.019957	$ 0.09	$ 6.67
Sales Expense	0.011877	$ 0.05	$ 3.97
Product Advertising Expense	0.000000	$ -	$ -
Business Fees (Other Operating Taxes)	0.001483	$ 0.01	$ 0.51
Marketing & Business Fees Total		$ 0.15	$ 11.15
Sub-Total Invst., B&C, Marketing		$ 4.58	$ 345.29
Other Direct Expenses			
Network Operations	0.034832	$ 0.16	$ 12.03
Network Support Assets	0.014703	$ 0.07	$ 5.08
General Support Assets	0.088742	$ 0.41	$ 30.64
General Purpose Computers	0.043342	$ 0.20	$ 14.97
Uncollectible	0.003786	$ 0.02	$ 1.31
Accounting & Finance Expense	0.007346	$ 0.03	$ 2.54
Human Resources Expense	0.008294	$ 0.04	$ 2.86
Information Management Expense	0.070887	$ 0.32	$ 24.48
Intangibles	0.000000	$ -	$ -
State Prescribed Directly Attributed	0.000000	$ -	$ -
Total Other Direct Expenses		$ 1.25	$ 93.90
TELRIC		$ 5.83	$ 439.19

Direct CLEC to CLEC Interconnection

Loading Calculations *(continued)*

Common					
Executive Expense	**0.011267**	**$**	**0.07**	**$**	**4.95**
Planning Expense	**0.000525**	**$**	**0.00**	**$**	**0.23**
External Relations Expense	**0.037846**	**$**	**0.22**	**$**	**16.62**
Legal Expense	**0.004717**	**$**	**0.03**	**$**	**2.07**
Other Procurement Expense	**0.001860**	**$**	**0.01**	**$**	**0.82**
Research & Development Expense	**0.000006**	**$**	**0.00**	**$**	**0.00**
Other General and Admin Expense	**0.015064**	**$**	**0.09**	**$**	**6.62**
State Prescribed Common	**0.000000**	**$**	**-**	**$**	**-**
Common Costs		**$**	**0.42**	**$**	**31.31**
TELRIC + Common Costs		**$**	**6.25**	**$**	**470.49**

Direct CLEC to CLEC Interconnection

WCP Recurring

	Factor Value	Cable Racking DS0	Cable Racking DS1	Cable Racking DS3	Cable Racking Fiber
Investment		$1.1176	$1.5203	$0.5877	$5.8277
Investment Loadings					
Power	0.069700	$0.0779	$0.1060	$0.0410	$0.4062
Sales Tax	0.056400	$0.0674	$0.0917	$0.0355	$0.3516
Interest During Construction	0.006100	$0.0078	$0.0105	$0.0041	$0.0404
Loaded Investment		$1.2707	$1.7285	$0.6682	$6.6259
COE Land And Building Investment					
Building	0.199833	$0.2539	$0.3454	$0.1335	$1.3241
Land	0.003732	$0.0047	$0.0065	$0.0025	$0.0247
Investment With COE Land And Bldg		$1.5294	$2.0803	$0.8042	$7.9747
Investment Based Monthly Direct Costs					
Depreciation	0.109717	$0.0116	$0.0158	$0.0061	$0.0606
Cost Of Money	0.045455	$0.0048	$0.0065	$0.0025	$0.0251
Income Tax Expense	0.017189	$0.0018	$0.0025	$0.0010	$0.0095
Maintenance	0.025490	$0.0027	$0.0037	$0.0014	$0.0141
Ad Valorem Tax	0.009546	$0.0010	$0.0014	$0.0005	$0.0053
Investment Based Monthly Direct Costs		$0.0220	$0.0299	$0.0115	$0.1145
COE Land And Building Cost					
COE Building	0.151319	$0.0032	$0.0044	$0.0017	$0.0167
COE Land	0.155318	$0.0001	$0.0001	$0.0000	$0.0003
COE Land And Building Monthly Costs		$0.0033	$0.0044	$0.0017	$0.0170
Total Investment Based Monthly Costs		$0.0252	$0.0343	$0.0133	$0.1315
Marketing & Business Fees					
Product Management Expense	0.019957	$0.0005	$0.0007	$0.0003	$0.0026
Sales Expense	0.011877	$0.0003	$0.0004	$0.0002	$0.0016
Product Advertising Expense	0.000000	$0.0000	$0.0000	$0.0000	$0.0000
Business Fees (Other Operating Taxes)	0.001483	$0.0000	$0.0001	$0.0000	$0.0002
Marketing & Business Fees Total		$0.0008	$0.0011	$0.0004	$0.0044
Sub-Total Invst., B&C, Marketing		$0.0261	$0.0355	$0.0137	$0.1359

Direct CLEC to CLEC Interconnection

WCP Recurring

	Factor Value	Cable Racking DS0	Cable Racking DS1	Cable Racking DS3	Cable Racking Fiber
Other Direct Expenses					
Network Operations	0.034832	$0.0009	$0.0012	$0.0005	$0.0047
Network Support Assets	0.014703	$0.0004	$0.0005	$0.0002	$0.0020
General Support Assets	0.088742	$0.0023	$0.0031	$0.0012	$0.0121
General Purpose Computers	0.043342	$0.0011	$0.0015	$0.0006	$0.0059
Uncollectible	0.003786	$0.0001	$0.0001	$0.0001	$0.0005
Accounting & Finance Expense	0.007346	$0.0002	$0.0003	$0.0001	$0.0010
Human Resources Expense	0.008294	$0.0002	$0.0003	$0.0001	$0.0011
Information Management Expense	0.070887	$0.0018	$0.0025	$0.0010	$0.0096
Intangibles	0.000000	$0.0000	$0.0000	$0.0000	$0.0000
State Prescribed Directly Attributed	0.000000	$0.0000	$0.0000	$0.0000	$0.0000
Total Other Direct Expenses		$0.0071	$0.0096	$0.0037	$0.0370
TELRIC		$0.0332	$0.0451	$0.0174	$0.1729
Common					
Executive Expense	0.011267	$0.0004	$0.0005	$0.0002	$0.0019
Planning Expense	0.000525	$0.0000	$0.0000	$0.0000	$0.0001
External Relations Expense	0.037846	$0.0013	$0.0017	$0.0007	$0.0065
Legal Expense	0.004717	$0.0002	$0.0002	$0.0001	$0.0008
Other Procurement Expense	0.001860	$0.0001	$0.0001	$0.0000	$0.0003
Research & Development Expense	0.000006	$0.0000	$0.0000	$0.0000	$0.0000
Other General and Admin Expense	0.015064	$0.0005	$0.0007	$0.0003	$0.0026
State Prescribed Common	0.000000	$0.0000	$0.0000	$0.0000	$0.0000
Common Costs		$0.0024	$0.0032	$0.0012	$0.0123
TELRIC + Common Costs		$0.0355	$0.0483	$0.0187	$0.1852

Direct CLEC to CLEC Interconnection

Monthly Maintenance

	Factor Value	Cable Racking DS0	Cable Racking DS1	Cable Racking DS3	Cable Racking Fiber
Investment		$ 57.11	$ 57.11	$ 57.11	$ 514.00
Investment Based Costs					
Maintenance	0.022224	$0.10577	$0.10577	$0.10577	$0.95192
Marketing & Business Fees					
Product Management Expense	0.019957	$0.00211	$0.00211	$0.00211	$0.01900
Sales Expense	0.011877	$0.00126	$0.00126	$0.00126	$0.01131
Product Advertising Expense	0.000000	$0.00000	$0.00000	$0.00000	$0.00000
Business Fees (Other Operating Taxes)	0.001483	$0.00016	$0.00016	$0.00016	$0.00146
Marketing & Business Fees Total		$0.00353	$0.00353	$0.00353	$0.03176
Sub-Total Invst., B&C, Marketing		$0.10930	$0.10930	$0.10930	$0.98368
Other Direct Expenses					
Network Operations	0.034832	$0.00381	$0.00381	$0.00381	$0.03426
Network Support Assets	0.014703	$0.00161	$0.00161	$0.00161	$0.01446
General Support Assets	0.088742	$0.00970	$0.00970	$0.00970	$0.08729
General Purpose Computers	0.043342	$0.00474	$0.00474	$0.00474	$0.04263
Uncollectible	0.003786	$0.00041	$0.00041	$0.00041	$0.00372
Accounting & Finance Expense	0.007346	$0.00080	$0.00080	$0.00080	$0.00723
Human Resources Expense	0.008294	$0.00091	$0.00091	$0.00091	$0.00816
Information Management Expense	0.070887	$0.00775	$0.00775	$0.00775	$0.06973
Intangibles	0.000000	$0.00000	$0.00000	$0.00000	$0.00000
Total Other Direct Expenses		$0.02972	$0.02972	$0.02972	$0.26749
TELRIC		$0.13902	$0.13902	$0.13902	$1.25118
Common					
Executive Expense	0.011267	$0.00157	$0.00157	$0.00157	$0.01410
Planning Expense	0.000525	$0.00007	$0.00007	$0.00007	$0.00066
External Relations Expense	0.037846	$0.00526	$0.00526	$0.00526	$0.04735
Legal Expense	0.004717	$0.00066	$0.00066	$0.00066	$0.00590
Other Procurement Expense	0.001860	$0.00026	$0.00026	$0.00026	$0.00233
Research & Development Expense	0.000006	$0.00000	$0.00000	$0.00000	$0.00001
Other General and Admin Expense	0.015064	$0.00209	$0.00209	$0.00209	$0.01885
Common Costs		$0.00991	$0.00991	$0.00991	$0.08919
TELRIC + Common Costs		$0.14893	$0.14893	$0.14893	$1.34037

CONTINUATION

[105]



Collocation: Line Sharing

SOUTH DAKOTA
June 2002

Study ID: 6506

QWEST CORPORATION
Policy and Law

Table of Contents

	Page
I. Executive Summary	3
A. Purpose Scope, and Application	3
B. Description of Service	3
C. Study Methodology	4
D. Description of Long Run Incremental Costs	4
E. Study Assumptions	5
II. Rate Elements	6
III. Work Papers	7
Study Summary	7
Inputs	8
Configurations	12
Cost Summary	15
Engineering	16
Cost per Splitter	17
Splitter Bay - Direct to DLEC	18
Splitter Bay - Data to 410	19
Splitter Bay - Vo & VoDa	20
IDF Splitter Direct to DLEC	21
IDF Splitter to 410	22
MDF Splitter Direct to DLEC	23
MDF Splitter to 410	24
WCP Maintenance	25
WCP Non-Recurring	27
Bay Constuction	29
Lighting	30
Line Sharing Actuals	32

Executive Summary

A. PURPOSE, SCOPE, AND APPLICATION

The purpose of this study is to determine the expenses and recurring costs that will be incurred by Qwest to provide Collocation: Line Sharing for customers.

This study develops Qwest average costs. Costs are based on a per unit basis depending upon which element is being requested.

The costs developed in this study can be used for developing pricing for customer - requested items.

B. DESCRIPTION OF SERVICE

Line Sharing allows the Co-Provider's the ability to share the local loop by permitting them access to the customer through ADSL technology. Line Sharing will permit the use of any ADSL technology that falls within the parameters of the T1.413 standard.

The Co-Provider's have the option of either purchasing approved central office POTS splitters from a list of approved products or to have Qwest purchase the splitter on the Co-Provider's behalf.

Qwest will install the splitter in one of three possible locations within the central office:
1. on a Splitter Bay as close to the Intermediate Distribution Frame (IDF) or the Co-Provider's DS0 termination points as possible;
2. on the IDF; or
3. on the Main Distribution Frame (MDF) where options 1 or 2 are not available.

Cost Elements

- **Engineering** - This rate element applies when Line Sharing is ordered. Included in the charge are the engineering hours required for each job request. *No material or placement costs are included in this rate.*
- **Splitter Shelf Charge** - This rate element applies when the splitter is located on an equipment bay in the common area and the data connections are tied back to the 410 block on IDF or to the CLECs space. Included in the charge are the apportioned equipment bay costs required to house the splitter and the cost to mount the splitter. *The cost of splitter and cards are charged separately.*
- **Splitter in the Common Area - Data to 410 Block** - This rate element applies when the splitter is located on an equipment bay in the common area and the data connections are tied back to the 410 block on IDF. Included in the charge are the cable, placement and connector costs for 96 DS0 cable equivalents. In addition, the tying of cables to the blocks, stenciling, and test and tone out are included. This configuration also includes the required Voice and Voice/Data charges that include the 89-100 block, mounting the block, the tying of cables to the block, stenciling, and test and tone out. This configuration assumes the CLEC has connections between the MDF and IDF and the CLEC has purchased or supplied the splitter and cards.
- **Splitter in the Common Area - Data Direct to CLEC** - This rate element applies when the splitter is located on an equipment bay in the common area and the data connections are tied back to the CLEC's collocation space. Included in the charge are the cable, placement and connector costs for 96 DS0 cable equivalents. This configuration also includes the required Voice and Voice/Data charges that include the 89-100 block, mounting the block, the tying of cables to the block, stenciling, and test and tone out. This configuration assumes the CLEC has connections between the MDF and IDF, terminations to the IDF, and the CLEC has purchased or supplied the splitter and cards.
- **Splitter on the MDF - Data to 410 Block** - This rate element applies when the splitter is located on the MDF and the data connections are tied back to the 410 block on the same frame. Included in the charge are the cable and placement costs for 96 DS0 cable equivalents. In addition, mounting the splitter blocks, the tying of cables to the blocks, stenciling, and test and tone out are included. This configuration assumes the CLEC has purchased or supplied the splitter and cards.
- **Splitter on the MDF - Data Direct to CLEC** - This rate element applies when the splitter is located on the MDF and the data connections are tied back to the CLEC's collocation space. Included in the charge are

- **Splitter on the MDF - Data Direct to CLEC** - This rate element applies when the splitter is located on the MDF and the data connections are tied back to the CLEC's collocation space. Included in the charge are the cable and placement costs for 96 DS0 cable equivalents. In addition, mounting the splitter blocks, the tying of cables to the blocks, stenciling, and test and tone out are included. This configuration assumes the CLEC has purchased or supplied the splitter and cards.

- **Splitter on the IDF - Data to 410 Block** - This rate element applies when the splitter is located on the IDF and the data connections are tied back to the 410 block on the same frame. Included in the charge are the cable, placement and connector costs for 96 DS0 cable equivalents. In addition, mounting the splitter blocks, the tying of cables to the blocks, stenciling, and test and tone out are included. This configuration assumes the CLEC has connections between the MDF and IDF and the CLEC has purchased or supplied the splitter and cards.

- **Splitter on the IDF - Data Direct to CLEC** - This rate element applies when the splitter is located on the IDF and the data connections are tied back to the CLEC's collocation space. Included in the charge are the cable and placement costs for 96 DS0 cable equivalents. In addition, mounting the splitter blocks, the tying of cables to the blocks, stenciling, and test and tone out are included. This configuration assumes the CLEC has connections between the MDF and IDF, terminations to the IDF, and the CLEC has purchased or supplied the splitter and cards.

C. STUDY METHODOLOGY

The costs were developed from material, engineering and installation labor costs provided by Subject Matter Experts (SME's) in Central Office Engineering and Outside Plant Engineering.

Monthly maintenance costs were developed by taking the element - specific expense and applying the account - code specific maintenance.

The investments/expenses from the above items were then entered into the WCP (Wholesale Cost Program) model, developed and used within Qwest.

D. DESCRIPTION OF LONG RUN INCREMENTAL COSTS

Long Run Incremental Cost (LRIC) is the method Qwest uses to estimate product and service costs. It provides a measurement of costs over a period of time long enough to fully adjust to changes of output (including changes in the size of facilities, levels of investment, etc.) in order to optimally accommodate this change. This methodology is forward looking in nature (i.e. LRIC uses the latest technology costs or replacement costs.) Since LRIC is forward looking, it does *not* measure historic investment decisions of the corporation.

The Qwest LRIC format disaggregates the cost results on a unitized basis into the components shown below:

Total Service Long Run Incremental Cost (TSLRIC) --Total Service Long Run Incremental Cost is the forward looking cost avoided (or added) by discontinuing (or offering) an entire service or group of services in the most efficient manner, holding constant the production of all other services produced by the firm. This cost is often referred to in economic terms as direct cost.

Shared Cost (SC)-- The cost associated with the provision of multiple services (service family). This cost is not volume sensitive and is eliminated only if the entire service family is discontinued.

Total Service Long Run Incremental Costs plus Shared Costs (TSLRIC+SC)--The Total Service Long Run Incremental Costs for a service plus the Shared Costs of a family of services.

Total Element Long Run Incremental Cost (TELRIC) -- Total Element Long Run Incremental Cost, as defined by the Federal Communications Commission, is the sum of the forward looking

direct cost incurred in the production of a network element (as opposed to an entire service), attributed costs considered as shared cost under TSLRIC terminology and selected administrative costs considered as common under TSLRIC terminology.

Common Cost (CC)

For **TSLRIC** purposes, common costs are the current cost incurred for the benefit of the enterprise as a whole. This cost does not vary with the provision of a service or a service family. These costs are sometimes referred to as *general overhead costs*. The Common Cost added to the TSLRIC + SC produces a **Fully Allocated Cost (FAC)** as required by Commission rules.

For **TELRIC** purposes, common costs are the current cost incurred for the benefit of the enterprise as a whole, after those cost that vary with the provisioning of individual network elements are removed. The costs removed from common for TELRIC purposes are included in the TELRIC itself. **Total Long Run Incremental Cost plus TELRIC common costs (TELRIC + CC)** form the basis for pricing Interconnection network elements. TELRIC + CC is the equivalent of fully allocated cost as the term is applied to network elements.

Typically, the cost identified by these cost categories include capital costs for depreciation, return, and income taxes. TSLRIC also includes ongoing operating costs for: administration expense, product management expense, pre sales expense, and business fees.

E. Study Assumptions

1. All cost are forward looking.
2. See "Inputs" worksheet.

Rate Elements

State: SOUTH DAKOTA

Line Sharing	RC	NRC	Rate Mapping RC	Rate Mapping NRC
Splitter Shelf Charge	$ 4.39	$ 532.56	Cost Summary'!G10	Cost Summary'!F10
Splitter TIE Cable Connections				
Splitter in the Common Area - Data to 410 Block	$ 5.19	$ 2,804.98	Cost Summary'!G17+('Cost Summary'!D18*'Cost Summary'!G18)	Cost Summary'!F17+('Cost Summary'!D18*'Cost Summary'!F18)
Splitter in the Common Area - Data Direct to CLEC	$ 5.52	$ 2,981.61	Cost Summary'!G11+('Cost Summary'!D12*'Cost Summary'!G12)	Cost Summary'!F11+('Cost Summary'!D12*'Cost Summary'!F12)
Splitter on the MDF - Data to 410 Block	$ 1.63	$ 882.73	Cost Summary'!G35	Cost Summary'!F35
Splitter on the MDF - Data Direct to CLEC	$ 3.69	$ 1,991.96	Cost Summary'!G31	Cost Summary'!F31
Splitter on the IDF - Data to 410 Block	$ 1.58	$ 853.16	Cost Summary'!G27	Cost Summary'!F27
Splitter on the IDF - Data Direct to CLEC	$ 3.11	$ 1,679.72	Cost Summary'!G23	Cost Summary'!F23
Engineering		$ 1,300.49		Cost Summary'!F6

Collocation: Line Sharing

Study Name	*Collocation: Line Sharing*	
Study Requester	*Vicki Bishara*	
Type of Study	*TELRIC*	
Study ID	*6506*	
Cost Factor Group	*Interconnection*	
Study Applications		
Completion Date	*June 13, 2002*	
Cost Analyst	*Tom Wilkinson*	
Study Review	**Reviewer**	**Date**
	Vicki Bishara	*June 13, 2002*
Cost Models Used	**Model**	**Version and/or Release Date**
	Wholesale Cost Program	*Version 2.08*
	Cost Factor Databases	*Vintage: 02SD01E*
	Cost Factors Model (TELRIC)	
Cost Factors Used	**Factor**	**Effective Date**
	Capital Recovery	*04/02*
	Maintenance	*02/02*
	Ad Valorem	*02/02*
	Power	*01/01*
	Sales Tax	*01/01*
	Interest During Construction	*01/01*
	COE Land & Bldg	*02/02*
	Directly Assigned Factors	*04/02*
	Directly Attributable Factors	*04/02*
	Common	*04/02*
	Cost Of Money	*10.14%*
Inflation		
Major Cost Drivers		

Collocation: Line Sharing

Study Information

	Value
Filing Month	June
Filing Year	2002
State	SD
State Full Name	SOUTH DAKOTA
Run Date	6/13/02
Factor Vintage	*02SD01E*
Study ID	6506

Model Assumptions

	Value	Source
General		
Shipping Rate	13.99%	
Tax on Labor	*Yes*	
Work Completion Interval	90	
USWI Labor Percent	*69%*	
Specific		
Engineering		
Engineering Hours Override	**20**	Network
Engineering Rate	$ 46.18	Engineering
Other		
Projected Bay-Mounted Splitter per Office	8	Network
Number of feet to Splitter - Splitter on Splitter Bay	200	Network
Number of feet to Splitter - Splitter on MDF	200	Network
Number of feet to Splitter - Splitter on IDF	156	Network
Number of feet to Splitter - 410 Block	30	Network
Number of feet to Splitter - Vertical Drop	20	Network
Mounting Splitter Labor	$ 113.75	Network
Expense Per Foot of 25-pair Cable	$ 0.35	
Connector for Cable	$ 6.50	
Square Feet per Bay	9	
New Cable Racking Cable Utilization	3	
New Cable Racking Fill	100%	
Existing Cable Racking Fill	70%	SME

Collocation Model Inputs

	Value	Source
Aerial Support		
Grand Total Overall Aerial Support-90 day - Major (A)	*$ 8,478.12*	E. 2.1 & 3.1 Aerial Support
Grand Total Overall Aerial Support-90 day - Minor (B)	*$ 855.71*	E. 2.1 & 3.1 Aerial Support
Number of Channels - Major (C)	*9.5*	D. Defaults and Overrides - Number of Channels
Number of Channels - Minor (D)	*1.3*	D. Defaults and Overrides - Number of Channels
% of Offices that Require Major Aerial Support (E)	*50%*	E. 2.1 & 3.1 Aerial Support
Overall Aerial Support for 10' of Cable Rack	*$ 775.34*	=((A/C)+(B/D))*E
Cable Racking		
Grand Total Cable Racking -90 day - Major (A)	*$ 7,031.41*	E. 2.1 & 3.1 Cable Racking
Grand Total Cable Racking -90 day - Minor (B)	*$ 1,476.60*	E. 2.1 & 3.1 Cable Racking
Number of 10' Cable Racking Sections - Major (C)	*9.5*	D. Defaults and Overrides - Number of Channels
Number of 10' Cable Racking Sections - Minor (D)	*1.3*	D. Defaults and Overrides - Number of Channels
% of Offices that Require Major Aerial Support (E)	*50%*	E. 2.1 & 3.1 Cable Racking
Weighted 10' Section of Cable Racking	*$ 938.00*	=((A/C)+(B/D))*E
ITP		
DS0 Capacity Per Rack	*219*	=E. 1.7 ITP
DS1 Capacity Per Rack	*322*	=E. 1.7 ITP

DS3 Capacity Per Rack		833	=E. 1.7 ITP
Defaults and Overrides			
Expense per DS0 Cable Foot	$	1.45	=D. Defaults and Overrides
Expense per DS1 Cable Foot	$	1.13	=D. Defaults and Overrides
Expense per DS3 Cable Foot	$	0.89	=D. Defaults and Overrides
Expense per Bay	$	279.71	=D. Defaults and Overrides
90 Day Labor Expense per Bay	$	413.90	=D. Defaults and Overrides
90 Day Labor Expense add'l Bay	$	302.79	=D. Defaults and Overrides
Expense per Fixture	$	111.70	=D. Defaults and Overrides
90 Day Labor Expense per Fixture	$	202.37	=D. Defaults and Overrides
Expense per Light	$	103.96	=D. Defaults and Overrides
90 Day Labor expense per Light	$	202.37	=D. Defaults and Overrides
Expense per Cable	$	0.37	=D. Defaults and Overrides
90 Day Labor expense per Cable	$	2.36	=D. Defaults and Overrides
Expense per Wire	$	0.25	=D. Defaults and Overrides
90 Day Labor Expense per Wire	$	2.26	=D. Defaults and Overrides
Number of Fixtures		2.56	=D. Defaults and Overrides
Number of Conduit Supports per fixture	$	0.29	=D. Defaults and Overrides
Expense per Conduit Support	$	0.11	=D. Defaults and Overrides
Number of Outlet Raceways per fixture	$	2.27	=D. Defaults and Overrides
Expense per Outlet Raceway	$	44.11	=D. Defaults and Overrides
Number of Supports per fixture	$	8.15	=D. Defaults and Overrides
Expense per Support	$	8.42	=D. Defaults and Overrides
Number of Switches per fixture	$	1.20	=D. Defaults and Overrides
Expense per Switch	$	97.81	=D. Defaults and Overrides
Number of Fittings per fixture	$	8.73	=D. Defaults and Overrides
Expense per Fitting	$	4.74	=D. Defaults and Overrides
Number of Fitting Supports per fixture	$	0.73	=D. Defaults and Overrides
Expense per Fitting Supports	$	13.67	=D. Defaults and Overrides
Number of Miscellaneous Items per fixture	$	5.22	=D. Defaults and Overrides
Expense per Miscellaneous Item	$	0.27	=D. Defaults and Overrides
Expense per 89 Block	$	85.46	=D. Defaults and Overrides
Cable Hole			
Total 90 Day Labor Expense	$	207.91	='E. 2.1 Cable Hole'!$B$14
Total Material Expense	$	95.71	='E. 2.1 Cable Hole', Sum of "Other"& Fire Hole Material Expense
Rent Summary			
Rent per Square Foot	$	3.03	Detailed Summary of Results
Ground Wire			
Total 4/0 AWG cost per ft.	$	14.24	Grounding - Cage
Power Adjustment			
Power Maint Expense Adj		0.003266	G. Investment Factors

Labor Rate Inputs

		Value	Source
Placement, First Four (4, 25-pair Cables)	$	2.07	='Labor Rates'!$R$16
Tying Cables to Block	$	40.94	='Labor Rates'!$R$26
Block Stenciling	$	50.00	='Labor Rates'!$R$68
Test and Tone Out for First Three Shelves	$	124.17	='Labor Rates'!$R$65
Connect Bulk Cables (76-100)	$	138.82	='Labor Rates'!$R$29

Collocation: Line Sharing

Placement, Each Addl (4, 25-pair Cables)	$	1.73	='Labor Rates'!$R$17
MDF Block Installation	$	18.02	='Labor Rates'!$R$63

Factors	Value
WCP Version	2.08
Cost of Money	10.14%
Capital Recovery	04/02
Maintenance	02/02
Ad Valorem	02/02
Power	01/01
Sales Tax	01/01
Interest During Construction	01/01
COE Land & Bldg	02/02
Directly Assigned Factors	04/02
Directly Attributable Factors	04/02
Common	04/02
Vintage	02SD01E
Investment Loadings	
Power	0.069700
Sales Tax	0.056400
Interest During Construction	0.006100
COE Land And Building Investment	
Building	0.199833
Land	0.003732
Investment Based Monthly Direct Costs	
Depreciation	0.109717
Cost Of Money	0.045455
Income Tax Expense	0.017189
Maintenance	0.025490
Ad Valorem Tax	0.009546
COE Land And Building Cost	
COE Building	0.151319
COE Land	0.155318
Directly Assigned	
Product Management Expense	0.019957
Sales Expense	0.011877
Product Advertising Expense	0.000000
Business Fees (Other Operating Taxes)	0.001483
Directly Attributed	
Network Operations	0.034832
Network Support Assets	0.014703
General Support Assets	0.088742
General Purpose Computers	0.043342
Uncollectible	0.003786
Accounting & Finance Expense	0.007346
Human Resources Expense	0.008294
Information Management Expense	0.070887
Intangibles	0.000000
State Prescribed Directly Attributed	0.000000
Common	
Executive Expense	0.011267
Planning Expense	0.000525
External Relations Expense	0.037846

Collocation: Line Sharing

Legal Expense	*0.004717*
Other Procurement Expense	*0.001860*
Research & Development Expense	*0.000006*
Other General and Admin Expense	*0.015064*
State Prescribed Common	*0.000000*

Collocation: Line Sharing

Option 1A - Splitter on the Splitter Bay: Data Connections Direct to DLEC

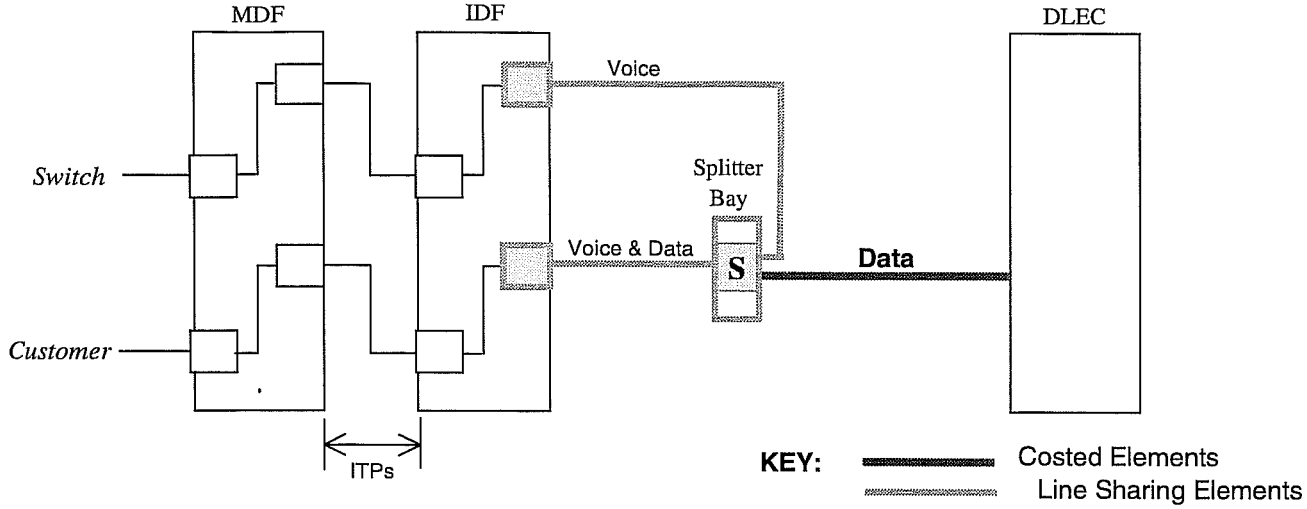

Option 1B - Splitter on the Splitter Bay: Data Connections to the 410 Block

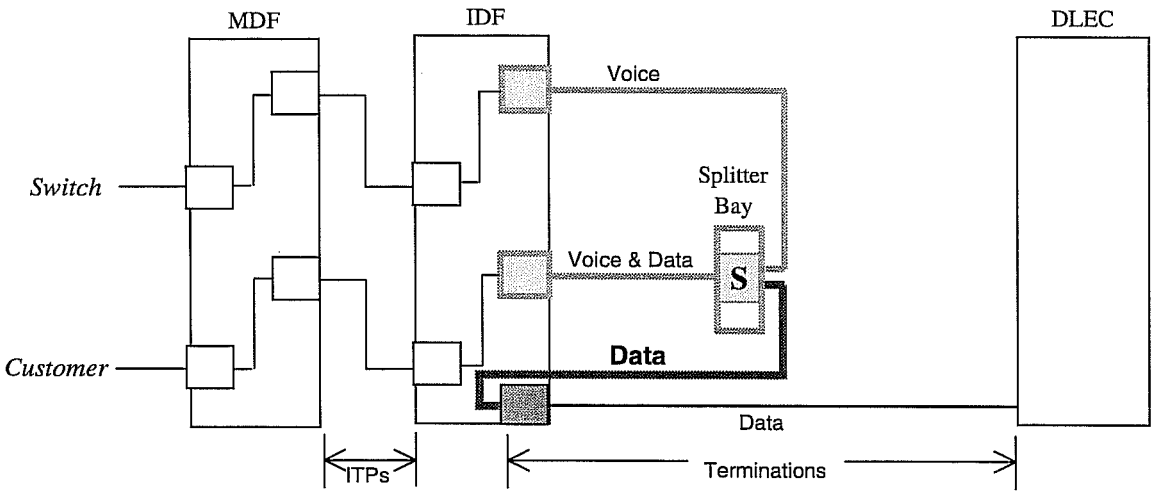

Option 1A & 1B - Splitter on the Splitter Bay: Per Each Voice and Voice/Data Connections

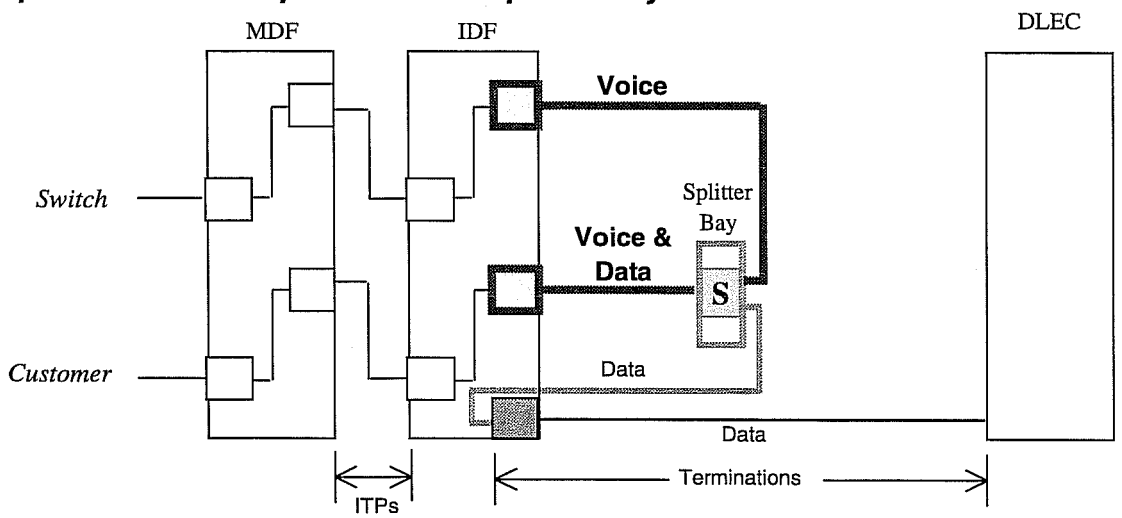

Collocation: Line Sharing

Option 2A - Splitter on the IDF: Data Connections Direct to DLEC

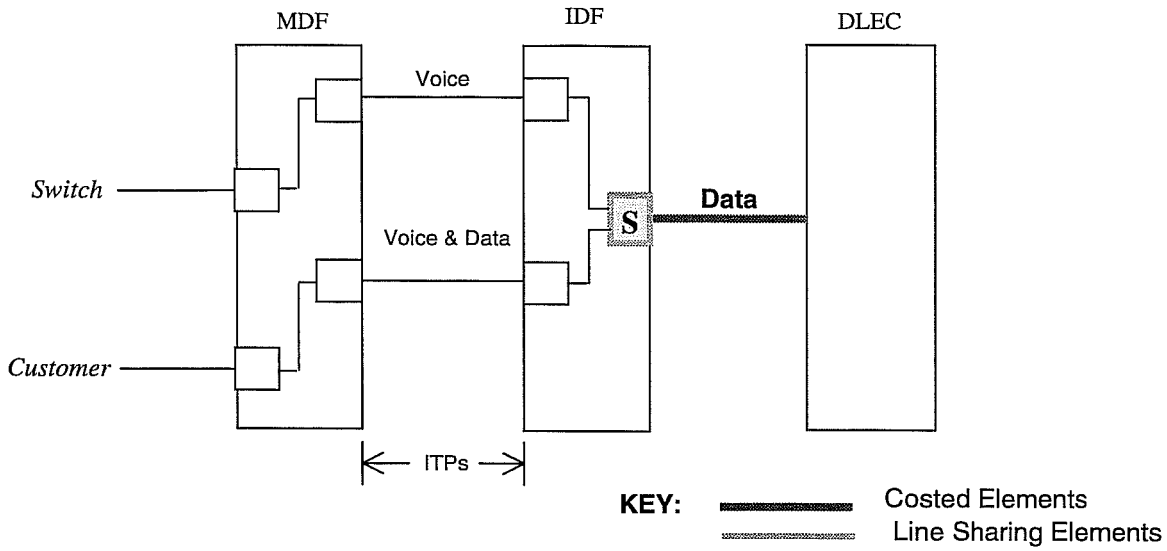

Option 2B - Splitter on the IDF: Data Connections to the 410 Block

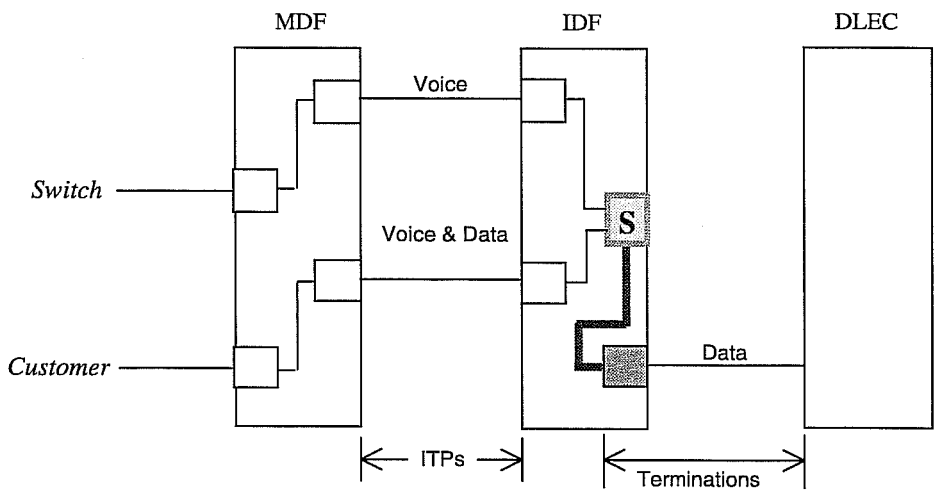

Collocation: Line Sharing

Option 3A - Splitter on the MDF: Data Connections Direct to DLEC

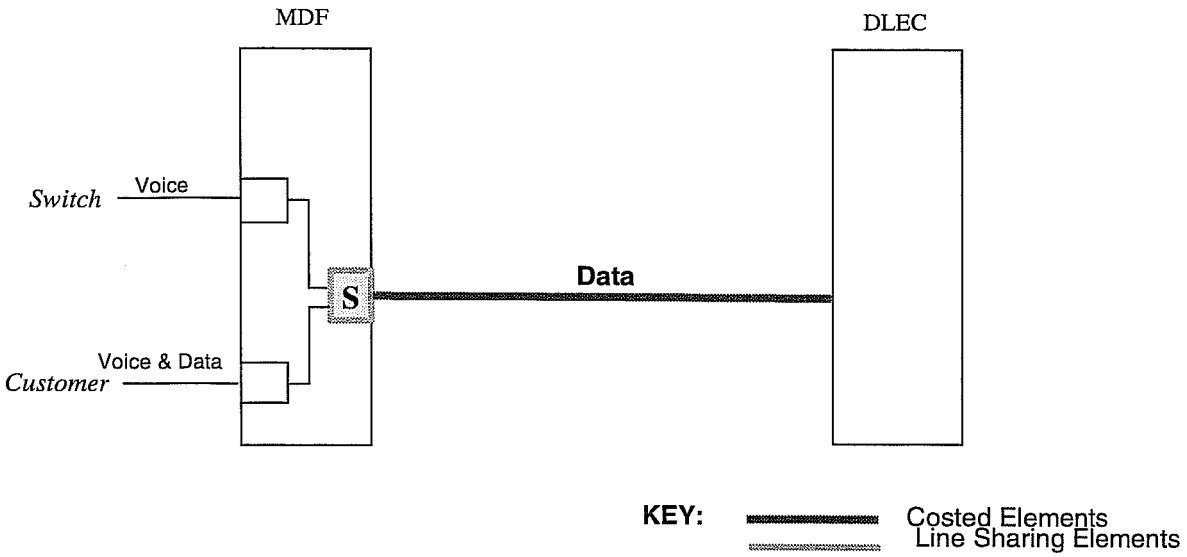

Option 3B - Splitter on the MDF: Data Connections to the 410 Block

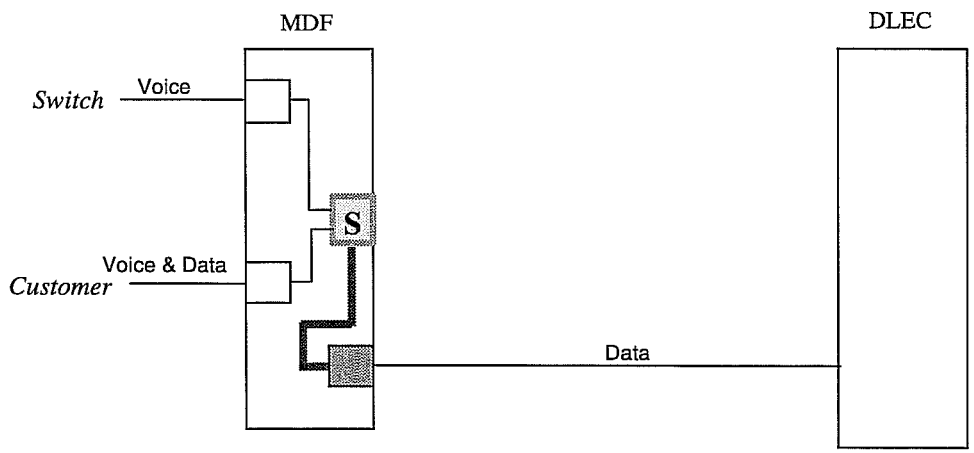

Collocation: Line Sharing

Line Sharing Cost Summary

Costs per Line Sharing Application	Minimum Quantity Required	Expense	Loaded Cost	Recurring Cost
Engineering	1	$ 923.60	$ 1,300.49	-
Total Engineering		**$ 923.60**	**$ 1,300.49**	-

Splitter Configuration Options

	Minimum Quantity Required	Expense	Loaded Cost	Recurring Cost
Common Area to 410				
Option 1 - Splitter on the Splitter Bay: Cost Per Splitter and Cards (8 shelves)	1	$ 378.22	$ 532.56	$ 4.39
Option 1B - Splitter on the Splitter Bay: Data Connections to the 410 Block	1	$ 595.04	$ 837.86	$ 1.55
Option 1A & 1B - Splitter on the Splitter Bay: Per Each Voice and Voice/Data Connections	2	$ 698.52	$ 983.56	$ 1.82
Total Common Area to 410		**$ 2,370.30**	**$ 3,337.54**	**$ 9.59**
Common Area Direct to DLEC				
Option 1 - Splitter on the Splitter Bay: Cost Per Splitter and Cards (8 shelves)	1	$ 378.22	$ 532.56	$ 4.39
Option 1A - Splitter on the Splitter Bay: Data Connections Direct to DLEC	1	$ 720.48	$ 1,014.49	$ 1.88
Option 1A & 1B - Splitter on the Splitter Bay: Per Each Voice and Voice/Data Connections	2	$ 698.52	$ 983.56	$ 1.82
Total Common Area Direct to DLEC		**$ 2,495.74**	**$ 3,514.17**	**$ 9.92**
MDF to 410				
Option 3B - Splitter on the MDF: Data Connections to the 410 Block	1	$ 626.91	$ 882.73	$ 1.63
Total MDF to 410		**$ 626.91**	**$ 882.73**	**$ 1.63**
MDF Direct to DLEC				
Option 3A - Splitter on the MDF: Data Connections Direct to DLEC	1	$ 1,414.68	$ 1,991.96	$ 3.69
Total MDF Direct to DLEC		**$ 1,414.68**	**$ 1,991.96**	**$ 3.69**
IDF to 410 Block				
Option 2B - Splitter on the IDF: Data Connections to the 410 Block	1	$ 605.91	$ 853.16	$ 1.58
Total IDF to 410 Block		**$ 605.91**	**$ 853.16**	**$ 1.58**
IDF Direct to DLEC				
Option 2A - Splitter on the IDF: Data Connections Direct to DLEC	1	$ 1,192.93	$ 1,679.72	$ 3.11
Total IDF Direct to DLEC		**$ 1,192.93**	**$ 1,679.72**	**$ 3.11**

Engineering

Costs per Line Sharing Application

Hours	20	
Expense/Unit	$ 46.18	
Total Expense		**$ 923.60**

Loading

Total Loaded Cost	**$**	**1,300.49**

ENGINEERING LINE SHARING REQUIREMENTS

PRELIMINARY ENGINEERING **HOURS: 2**

- Drawing Configuration
- Verify Existing Equipment
- Research Associated Jobs
- Verify Existing Office Environment

WALK THROUGH (FIELD SURVEY) **HOURS: 5**

- Bay Location Verification
- Detailed Cable Measurements
- Hardware Assessment
  - To include: Earthquake Bracing
    - Cable Racking Requirements
    - Bay Measurements
    - Ceiling Support
    - Floor Support
- Cable Placement

ENGINEERING **HOURS: 8**

- Material Order
- Material Verification
- Cable Placement on Engineering Prints
- Structure Placement on Engineering Prints
  - To include:
    - Bays
    - Cable Racking
    - Earthquake Bracing
    - Frame Placement
    - Floor Bracing
    - Ceiling Bracing
- Circuit Engineering and Verification
  - To include: All circuit placement and connections including connectivity.

FORMS/FOLLOW-UP **HOURS: 7**

- Installation Verification
  - To include: All Circuit Assignments
    - Equipment Placement
    - Cable Placement
    - Hardware Placement
- Verify Existing Circuits in TIRKS
- Remove Existing Circuits in TIRKS
- Place New Circuit connections in SWITCH
- Communicate Assignment Information to Customer

Option 1 - *Splitter on the Splitter Bay: Cost Per Splitter and Cards*

Bay Expenses

Bay Construction	Material & Labor per Bay	Units	Expense per Bay
Aerial Support	$ 775.34	0.42	$ 325.14
Network Bay (7 foot)	$ 748.51	1.00	$ 748.51
Cable Rack (per 10' section)	$ 938.00	0.84	$ 786.71
Ground Wire (ft)	$ 14.24	14.19	$ 202.11
Lighting (per fixture)	$ 275.39	0.19	$ 53.30
Total			**$ 2,115.77**

Projected Bay-Mounted Splitter per Office		**8**
Expense per Shelf	**$**	**264.47**
Mounting Splitter	**$**	**113.75**

Total Expense *(Does NOT include splitter and cards which are charged separately)*	**$**	**378.22**

Loading

Bay Expense: Total Loaded Cost	**$**	**532.56**

Monthly Maintenance

Total Monthly Maintenance	**$**	**0.99**

Rent

Rent per Square Foot	**$**	**3.03**	
Number of Square Feet per Bay	**$**	**9.00**	
Total Investment per Splitter and Cards	**$**	**12.03**	**$ 3.41**

Total Monthly Costs	**$**	**4.39**

Notes

The cost per splitter is calculated based on taking all costs related to the cost of building the bay and surrounding area and dividing by the number of splitters or shelves that a single bay can house.

Assumptions

This configuration assumes the CLEC has purchased or supplied the splitter and cards.

Option 1A - *Splitter on the Splitter Bay: Data Connections Direct to DLEC*

Cable Expense

Cable Placement

Placement (4, 25-pair Cables)	$ 2.07	1	$ 2.07
Number of feet to Splitter			200.00
Average Expense in Placing Cable			**$ 414.48**

Weighted Cable Expense

Expense Per Foot of 25-pair Cable	$ 0.35
Number of feet to Splitter	200.00
Connector for Cable	$ 6.50
Total Expense for 1, 25-pair Cable with Connector	**$ 76.50**
Number of 25-pair cables needed for 96 terminations	4.00
Total Expense for Cables and Connections to Splitter	**$ 306.00**

Total Expense for 96-pair Data Connections to the Splitter	**$ 720.48**

Loading

Total Loaded Cost for 96-pair Data Connection to the Splitter	**$ 1,014.49**

Monthly Maintenance

Total Monthly Maintenance	**$ 1.88**

Notes

The connections to the splitter are per 96 DS0 equivalents.
Cable lengths are based on cable lengths for actual jobs.

Assumptions

This configuration assumes the CLEC has connections between the MDF and IDF.
This configuration assumes the CLEC has purchased or supplied the splitter and cards.

Option 1B - *Splitter on the Splitter Bay: Data Connections to the 410 Block*

	Material & Labor	Units	Expense per Unit	
Block Expense				
Tying Cables to Block	$ 40.94	4	$ 163.75	
Block Stenciling	$ 50.00	0.333	$ 16.67	
Test and Tone Out for First Three Shelves	$ 124.17	0.333	$ 41.39	
Total Block Expense				**$ 221.80**
Cable Expense				
Cable Placement				
Placement (4, 25-pair Cables)	$ 2.07	1	$ 2.07	
Number of feet to Splitter			100.00	
Average Expense in Placing Cable			**$ 207.24**	
Weighted Cable Expense				
Expense Per Foot of 25-pair Cable			$ 0.35	
Number of feet to Splitter			100.00	
Connector for Cable			$ 6.50	
Total Expense for 1, 25-pair Cable with Connector			**$ 41.50**	
Number of 25 pair cables needed for 96 terminations			4.00	
Total Expense for Cables and Connections to Splitter			**$ 166.00**	
Total Expense for 4 Cables				**$ 373.24**
Total Expense for 96-pair Data Connections to the Splitter				**$ 595.04**
Loading				
Total Loaded Cost for 96-pair Data Connection to the Splitter				**$ 837.86**
Monthly Maintenance				
Total Monthly Maintenance				**$ 1.55**

Notes

Splitter and cards must be purchased separately.
The connections to the splitter are per 96 DS0 equivalents.
Cable lengths are based on cable lengths for actual jobs.

Assumptions

This configuration assumes the CLEC has a termination on the IDF.
This configuration assumes the CLEC has connections between the MDF and IDF.
This configuration assumes the CLEC has purchased or supplied the splitter and cards.

Option 1A & 1B - *Splitter on the Splitter Bay: Per Each Voice and Voice/Data Con*

	Material & Labor	Units	Expense per Unit		
Block Expense					
89-100 Block	$ 85.46	1	$ 85.46		
Mounting 89-100 Block	$ 18.02	1	$ 18.02		
Total Mounting Labor & Expense for 89-100 Block			**$ 103.48**		
Block Stenciling	$ 50.00	0.333	$ 16.67		
Tying Cables to Block	$ 40.94	4	$ 163.75		
Test and Tone Out	$ 124.17	0.333	$ 41.39		
Total Block Expense				**$**	**325.28**
Cable Expense					
Cable Placement					
Placement (4, 25-pair Cables)			$ 2.07		
Number of feet to Splitter			100.00		
Average Expense in Placing Cable			**$ 207.24**		
Weighted Cable Expense					
Expense Per Foot of 25-pair Cable			$ 0.35		
Number of feet to Splitter			100.00		
Connector for Cable			$ 6.50		
Total Expense for 1, 25-pair Cable and Connector			**$ 41.50**		
Number of 25 pair cables needed for 100 terminations			4.00		
Total Expense for Cables and Connections to Splitter			**$ 166.00**		
Total Expense for 4 Cables				**$**	**373.24**
Total Expense For 96-pair Connection (Voice or Voice/Data)				**$**	**698.52**
Loading					
Total Loaded Cost for Block & 96-pair Connection to Splitter				**$**	**983.56**
Monthly Maintenance					
Total Monthly Maintenance				**$**	**1.82**

Notes

This cost must be multiplied by two for both *Voice* and *Voice/Data* connections.
The connections to the splitter are per 96 DS0 equivalents.
Cable lengths are based on cable lengths for actual jobs.

Assumptions

This configuration assumes the CLEC has a termination on the IDF.
This configuration assumes the CLEC has connections between the MDF and IDF.
This configuration assumes the CLEC has purchased or supplied the splitter and cards.

Option 2A - *Splitter on the IDF: Data Connections Direct to DLEC*

	Material & Labor	Units	Expense per Unit	
Block Expense				
Mounting Splitter Block	$ 18.02	6	$ 108.13	
Block Stenciling	$ 16.67	6	$ 100.00	
Tying 25-pair Cable to Splitter	$ 26.20	6	$ 157.20	
Test and Tone Out	$ 124.17	0.3333	$ 41.39	
Total Expense for Each Block				**$ 406.71**
Cable Expense				
Cable Placement				
Placement (6, 25-pair Cable)	$ 1.96	1.50	$ 2.94	
Number of feet to Splitter			156.00	
Average Expense in Placing Cable			**$ 458.62**	
Cable Expense				
Expense Per Foot of 25-pair Cable			$ 0.35	
Number of feet to Splitter			156.00	
Number of 25-pair Cables Needed for 96 Terminations			6.00	
Total Cable Material Expense			**$ 327.60**	
Total Cable Expense				**$ 786.22**
Total Expense for 96-pair Connection				**$ 1,192.93**
Loading				
Total Loaded Cost for 96-pair Connection				**$ 1,679.72**
Monthly Maintenance				
Total Monthly Maintenance				**$ 3.11**

Notes

CANNOT divide total cost by six to get cost per one block.
The connections to the splitter are per 96 DS0 equivalents.
Average cable lengths are based on cable lengths for actual jobs.

Assumptions

This configuration assumes the CLEC has connections between the MDF and IDF.
This configuration assumes the CLEC has purchased or supplied a splitter blocks.

Option 2B - *Splitter on the IDF: Data Connections to the 410 Block*

Block Expense	Material & Labor	Units	Expense per Unit	
Mounting Splitter Block	$ 18.02	6	$ 108.13	
Block Stenciling (3)	$ 16.67	6	$ 100.00	
Tying 25-pair Cable to Splitter & 410	$ 26.20	12	$ 314.39	
Test and Tone Out	$ 124.17	0.3333	$ 41.39	
Total Expense for Each Block				**$ 563.91**

Cable Expense

Cable Placement

(*no charge*)	$	-
Average Expense in Placing Cable	**$**	**-**

Cable Expense

Expense Per Foot of 25-pair Cable	$	0.35
Number of Cable Feet on Frame		20.00
Number of 25-pair Cables Needed for 96 Terminations		6.00
Total Cable Material Expense	**$**	**42.00**

Total Cable Material Expense	**$**	**42.00**
Total Expense for 96-pair Connection	**$**	**605.91**

Loading

Total Loaded Cost for 96-pair Connection	**$**	**853.16**

Monthly Maintenance

Total Monthly Maintenance	**$**	**1.58**

Notes

CANNOT divide total cost by six to get cost per one block.
The connections to the splitter are per 96 DS0 equivalents.
Average cable lengths are based on cable lengths for actual jobs.

Assumptions

This configuration assumes the CLEC has purchased a Termination on the IDF.
This configuration assumes the CLEC has connections between the MDF and IDF.
This configuration assumes the CLEC has purchased or supplied a splitter blocks.

Collocation: Line Sharing

Option 3A - *Splitter on the MDF: Data Connections Direct to DLEC*

	Material & Labor	Units	Expense per Unit		
Block Expense					
Mounting Splitter Block	$ 18.02	6	$ 108.13		
Block Stenciling	$ 16.67	6	$ 100.00		
Tying Cable to Splitter	$ 26.20	6	$ 157.20		
Test and Tone Out	$ 124.17	0.3333	$ 41.39		
Total Cost for Each Block				$	406.71
Cable Expense					
Cable Placement					
Placement (6, 25-pair Cables)	$ 1.96	1.50	$ 2.94		
Number of Feet to Splitter			200.00		
Average Expense in Placing Cable			**$ 587.97**		
Cable Expense					
Expense Per Foot of 25-pair Cable			$ 0.35		
Number of Feet to Splitter			200.00		
Number of 25-pair Cables Needed for 96 Terminations			6.00		
Total Cable Material Expense			**$ 420.00**		
Total Cable Expense				$	1,007.97
Total Expense for 96-pair Connection				$	1,414.68
Loading					
Total Loaded Cost for 96-pair Connection				$	1,991.96
Monthly Maintenance					
Total Monthly Maintenance				$	3.69

Notes

CANNOT divide total cost by six to get cost per one block.
The connections to the splitter are per 96 DS0 equivalents.
Average cable lengths are based on cable lengths for actual jobs.

Assumptions

This configuration assumes the CLEC has purchased or supplied the splitter blocks.

Collocation: Line Sharing

Option 3B - *Splitter on the MDF: Data Connections to the 410 Block*

Block Expense	Material & Labor	Units	Expense per Unit	
Mounting Splitter Block	$ 18.02	6	$ 108.13	
Block Stenciling	$ 16.67	6	$ 100.00	
Tying Cable to Splitter	$ 26.20	12	$ 314.39	
Test and Tone Out	$ 124.17	0.3333	$ 41.39	
Total Cost for Each Block				**$ 563.91**

Cable Expense

Cable Placement

(*no charge*)	$	-
Average Expense in Placing Cable	**$**	**-**

Cable Expense

Expense Per Foot of 25-pair Cable	$	0.35
Number of Feet to Splitter		30.00
Number of 25-pair Cables Needed for 96 Terminations		6.00
Total Cable Material Expense	**$**	**63.00**

Total Cable Expense	**$**	**63.00**
Total Expense for 96-pair Connection	**$**	**626.91**

Loading

Total Loaded Cost for 96-pair Connection	**$**	**882.73**

Monthly Maintenance

Total Monthly Maintenance	**$**	**1.63**

Notes

CANNOT divide total cost by six to get cost per one block.
The connections to the splitter are per 96 DS0 equivalents.
Average cable lengths are based on cable lengths for actual jobs.

Assumptions

This configuration assumes the CLEC has purchased or supplied the splitter blocks.

CONTINUATION

[108]

WCP Maintenance

	Factor Value	Shelf Cost	Splitter Bay A Cost	Splitter Bay B Cost	Splitter Bay C Cost	MDF-DLEC Splitter Cost	MDF-410 Splitter Cost	IDF-DLEC Splitter Cost	IDF-410 Splitter Cost
Investment		$ 378.22	$ 595.04	$ 720.48	$ 698.52	$ 1,414.68	$ 626.91	$ 1,192.93	$ 605.91
Investment Based Costs									
Maintenance	0.022224	$0.70	$1.10	$1.33	$1.29	$2.62	$1.16	$2.21	$1.12
Directly Assigned									
Product Management Expense	0.019957	$0.01398	$0.02199	$0.02663	$0.02582	$0.05229	$0.02317	$0.04409	$0.02239
Sales Expense	0.011877	$0.00832	$0.01309	$0.01585	$0.01537	$0.03112	$0.01379	$0.02624	$0.01333
Product Advertising Expense	0.000000	$0.00000	$0.00000	$0.00000	$0.00000	$0.00000	$0.00000	$0.00000	$0.00000
Business Fees (Other Operating Taxes)	0.001483	$0.00107	$0.00169	$0.00204	$0.00198	$0.00401	$0.00178	$0.00338	$0.00172
Directly Assigned Costs		$0.02337	$0.03677	$0.04452	$0.0432	$0.0874	$0.0387	$0.0737	$0.0374
Total Direct Costs		$0.72383	$1.13878	$1.37885	$1.3368	$2.7074	$1.1998	$2.2830	$1.1596
Directly Attributed									
Network Operations	0.034832	$0.02521	$0.03967	$0.04803	$0.0466	$0.0943	$0.0418	$0.0795	$0.0404
Network Support Assets	0.014703	$0.01064	$0.01674	$0.02027	$0.0197	$0.0398	$0.0176	$0.0336	$0.0170
General Support Assets	0.088742	$0.06423	$0.10106	$0.12236	$0.1186	$0.2403	$0.1065	$0.2026	$0.1029
General Purpose Computers	0.043342	$0.03137	$0.04936	$0.05976	$0.0579	$0.1173	$0.0520	$0.0990	$0.0503
Uncollectible	0.003786	$0.00274	$0.00431	$0.00522	$0.0051	$0.0103	$0.0045	$0.0086	$0.0044
Accounting & Finance Expense	0.007346	$0.00532	$0.00837	$0.01013	$0.0098	$0.0199	$0.0088	$0.0168	$0.0085
Human Resources Expense	0.008294	$0.00600	$0.00944	$0.01144	$0.0111	$0.0225	$0.0100	$0.0189	$0.0096
Information Management Expense	0.070887	$0.05131	$0.08072	$0.09774	$0.0948	$0.1919	$0.0850	$0.1618	$0.0822
Intangibles	0.000000	$0.00000	$0.00000	$0.00000	$0.0000	$0.0000	$0.0000	$0.0000	$0.0000
Directly Attributed Costs		$0.19683	$0.30967	$0.37495	$0.3635	$0.7362	$0.3263	$0.6208	$0.3153
TELRIC		$0.92067	$1.44845	$1.75380	$1.7003	$3.4436	$1.5260	$2.9038	$1.4749

Monthly Maintenance *(continued)*

Common									
Executive Expense	0.011267	$0.01037	$0.01632	$0.01976	$0.0192	$0.0388	$0.0172	$0.0327	$0.0166
Planning Expense	0.000525	$0.00048	$0.00076	$0.00092	$0.0009	$0.0018	$0.0008	$0.0015	$0.0008
External Relations Expense	0.037846	$0.03484	$0.05482	$0.06637	$0.0644	$0.1303	$0.0578	$0.1099	$0.0558
Legal Expense	0.004717	$0.00434	$0.00683	$0.00827	$0.0080	$0.0162	$0.0072	$0.0137	$0.0070
Other Procurement Expense	0.001860	$0.00171	$0.00269	$0.00326	$0.0032	$0.0064	$0.0028	$0.0054	$0.0027
Research & Development Expense	0.000006	$0.00001	$0.00001	$0.00001	$0.0000	$0.0000	$0.0000	$0.0000	$0.0000
Other General and Admin Expense	0.015064	$0.01387	$0.02182	$0.02642	$0.0256	$0.0519	$0.0230	$0.0437	$0.0222
Common Costs		$0.06563	$0.10325	$0.12502	$0.1212	$0.2455	$0.1088	$0.2070	$0.1051
TELRIC + Common Costs		$0.98630	$1.55171	$1.87882	$1.8215	$3.6891	$1.6348	$3.1108	$1.5800

WCP Non-Recurring

	Factor Value	Engineering Cost	Shelf Cost	Splitter Bay A Cost	Splitter Bay B Cost	Splitter Bay C Cost	MDF-DLEC Splitter Cost	MDF-410 Splitter Cost	IDF-DLEC Splitter Cost	IDF-410 Splitter Cost
Expense		$ 923.60	$ 378.22	$ 595.04	$ 720.48	$ 698.52	$ 1,414.68	$ 626.91	$ 1,192.93	$ 605.91
Directly Assigned										
Product Management Expense	0.019957	$ 18.43	$ 7.55	$ 11.88	$ 14.38	$ 13.94	$ 28.23	$ 12.51	$ 23.81	$ 12.09
Sales Expense	0.011877	$ 10.97	$ 4.49	$ 7.07	$ 8.56	$ 8.30	$ 16.80	$ 7.45	$ 14.17	$ 7.20
Product Advertising Expense	0.000000	$ -	$ -	$ -	$ -	$ -	$ -	$ -	$ -	$ -
Business Fees (Other Operating Taxes	0.001483	$ 1.41	$ 0.58	$ 0.91	$ 1.10	$ 1.07	$ 2.16	$ 0.96	$ 1.83	$ 0.93
Directly Assigned Costs		$ 30.82	$ 12.62	$ 19.85	$ 24.04	$ 23.31	$ 47.20	$ 20.92	$ 39.80	$ 20.22
Total Direct Monthly Costs		$ 954.42	$ 390.84	$ 614.90	$ 744.52	$ 721.83	$ 1,461.88	$ 647.83	$ 1,232.73	$ 626.12
Directly Attributed										
Network Operations	0.034832	$ 33.24	$ 13.61	$ 21.42	$ 25.93	$ 25.14	$ 50.92	$ 22.56	$ 42.94	$ 21.81
Network Support Assets	0.014703	$ 14.03	$ 5.75	$ 9.04	$ 10.95	$ 10.61	$ 21.49	$ 9.53	$ 18.13	$ 9.21
General Support Assets	0.088742	$ 84.70	$ 34.68	$ 54.57	$ 66.07	$ 64.06	$ 129.73	$ 57.49	$ 109.40	$ 55.56
General Purpose Computers	0.043342	$ 41.37	$ 16.94	$ 26.65	$ 32.27	$ 31.29	$ 63.36	$ 28.08	$ 53.43	$ 27.14
Uncollectible	0.003786	$ 3.61	$ 1.48	$ 2.33	$ 2.82	$ 2.73	$ 5.53	$ 2.45	$ 4.67	$ 2.37
Accounting & Finance Expense	0.007346	$ 7.01	$ 2.87	$ 4.52	$ 5.47	$ 5.30	$ 10.74	$ 4.76	$ 9.06	$ 4.60
Human Resources Expense	0.008294	$ 7.92	$ 3.24	$ 5.10	$ 6.17	$ 5.99	$ 12.12	$ 5.37	$ 10.22	$ 5.19
Information Management Expense	0.070887	$ 67.66	$ 27.71	$ 43.59	$ 52.78	$ 51.17	$ 103.63	$ 45.92	$ 87.38	$ 44.38
Intangibles	0.000000	$ -	$ -	$ -	$ -	$ -	$ -	$ -	$ -	$ -
State Prescribed Directly Attributed	0.000000	$0.00	$0.00	$0.00	$0.00	$0.00	$0.00	$0.00	$0.00	$0.00
Directly Attributed Costs		$ 259.54	$ 106.28	$ 167.21	$ 202.46	$ 196.29	$ 397.53	$ 176.16	$ 335.22	$ 170.26
TELRIC		$ 1,213.95	$ 497.12	$ 782.11	$ 946.98	$ 918.11	$ 1,859.41	$ 823.99	$ 1,567.95	$ 796.39

WCP Non-Recurring (continued)

Common																
Executive Expense	0.011267	$	13.68	$	5.60	$	8.81	$	10.67	$	10.34	$	20.95	$	9.28	$	17.67	$	8.97
Planning Expense	0.000525	$	0.64	$	0.26	$	0.41	$	0.50	$	0.48	$	0.98	$	0.43	$	0.82	$	0.42
External Relations Expense	0.037846	$	45.94	$	18.81	$	29.60	$	35.84	$	34.75	$	70.37	$	31.18	$	59.34	$	30.14
Legal Expense	0.004717	$	5.73	$	2.35	$	3.69	$	4.47	$	4.33	$	8.77	$	3.89	$	7.40	$	3.76
Other Procurement Expense	0.001860	$	2.26	$	0.92	$	1.45	$	1.76	$	1.71	$	3.46	$	1.53	$	2.92	$	1.48
Research & Development Expense	0.000006	$	0.01	$	0.00	$	0.00	$	0.01	$	0.01	$	0.01	$	0.00	$	0.01	$	0.00
Other General and Admin Expense	0.015064	$	18.29	$	7.49	$	11.78	$	14.27	$	13.83	$	28.01	$	12.41	$	23.62	$	12.00
State Prescribed Common	0.000000		$0.00		$0.00		$0.00		$0.00		$0.00		$0.00		$0.00		$0.00		$0.00
Common Costs		$	86.54	$	35.44	$	55.75	$	67.51	$	65.45	$	132.55	$	58.74	$	111.77	$	56.77
TELRIC + Common Costs		$	1,300.49	$	532.56	$	837.86	$	1,014.49	$	983.56	$	1,991.96	$	882.73	$	1,679.72	$	853.16

Line Sharing
Collocation Model Worksheet

Bay Construction

Bay		
Number of Bays		1
Expense per Bay	$	279.71
Total Material Expense	$	279.71
Shipping	$	39.13
Sales Tax	$	15.78
90 Day Labor Expense per Bay	$	413.90
90 Day Labor Expense add'l Bay	$	302.79
Total 90 Day Labor Expense	$	413.90
Total 90 Day Expense	$	693.61
Total Bay Construction	**$**	**748.51**

Line Sharing
Collocation Model Worksheet

Lighting

Fixtures		
Number of Fixtures		1.00
Expense per Fixture	$	111.70
90 Day Labor Expense per Fixture	$	202.37
Total Fixture Expense	**$**	**314.07**
Lights		
Number of Lights		1.00
Expense per Light	$	103.96
90 Day Labor expense per Light	$	202.37
Total Light Expense	**$**	**306.33**
Cable		
Number of Cables		1
expense per Cable	$	0.37
90 Day Labor expense per Cable	$	2.36
Total cable expense	**$**	**2.73**
Wire		
Number of Wires		1
expense per Wire	$	0.25
90 Day Labor Expense per Wire	$	2.26
Total wire expense	**$**	**2.51**
Other		
Number of Conduit Supports per fixture		0.11
expense per Conduit Support	$	0.11
Total	*$*	*0.01*
Number of Outlet Raceways per fixture		0.89
expense per Outlet Raceway	$	44.11
Total	*$*	*39.07*
Number of Supports per fixture		3.18
expense per Support	$	8.42
Total	*$*	*26.79*
Number of Switches per fixture		0.47
Expense per Switch	$	97.81
Total	*$*	*45.64*
Number of Fittings per fixture		3.41
Expense per Fitting	$	4.74
Total	*$*	*16.16*
Number of Fitting Supports per fixture		0.29
Expense per Fitting Supports	$	13.67
Total	*$*	*3.91*
Number of Miscellaneous Items per fixture		2.04
Expense per Miscellaneous Item	$	0.27
Total	*$*	*0.56*
Total Other	**$**	**132.14**
Shipping	$	48.74
Taxes	$	19.65

Line Sharing
Collocation Model Worksheet

Total 90 Day Expense	$ 826.17

Line [illegible]aring
Actuals

BVAPP - (BVMV...)	Average Units	###	###	###	###	###	###	###	###	###	###	###	###	###	###	###	###	###	###	###	###	###	###	###	###	###	###	###	###	###	###	###
Cabling Footage	100.00	150	100	75	80	100	180	80	100	180	100	75	100	120	120	180	120	85	20	120	120	220	120	50	100	100	65	65	100	220	50	50
Bay Ironwork (per bay)	0.42	1	1	1	0	0	0	0	0	0	0	0	0	0	1	0	1	1	1	0	0	1	1	0	1	0	1	0	1	0	0	1
Cable Rack (10' Pieces)	0.84	3	2	2	0	0	0	0	0	0	0	0	0	0	3	0	2	1	2	0	0	3	0	0	2	0	1	0	3	0	0	2
Ground Wire (ft)	14.19	30	30	30	0	0	0	0	0	0	0	0	0	0	30	0	25	10	40	0	0	75	10	0	40	0	10	0	60	0	0	50
Lighting (per fixture)incl in labor	0.19	1	1	1	0	0	0	0	0	0	0	0	0	0	0	0	0	1	0	0	0	0	1	0	0	0	0	0	0	0	0	1

CONTINUATION

[110]



Collocation: OCn Terminations

SOUTH DAKOTA
June 2002

Study ID: 6507

QWEST CORPORATION
Policy and Law

Collocation: OCn Terminations

Table of Contents

	Page
I. Executive Summary	3
A. Purpose Scope, and Application	3
B. Description of Service	4
C. Study Methodology	4
D. Description of Long Run Incremental Costs	4
E. Study Assumptions	4
II. Rate Elements	5
III. Work Papers	6
Study Summary	6
Inputs	7
Fiber Distribution Frame	9
Fiber distribution Panel	10
Cable Racking	11
WCP Recurring	12
WCP Non-Recurring	14
WCP Maintenance	15

Executive Summary

A. PURPOSE, SCOPE, AND APPLICATION

The purpose of this study is to determine the expenses and recurring costs that will be incurred by Qwest to provide OCn Terminations for customers.

This study develops Qwest average costs. Costs are based on a per unit basis depending upon which element is being requested.

The costs developed in this study can be used for developing pricing for customer-requested items.

Costs are depicted as follows:
- Non-Recurring Caged and Cageless
- Monthly Recurring Caged and Cageless

B. DESCRIPTION OF SERVICE

OCn Terminations provide an uninterrupted path from the Collocation space to an existing fiber frame. The connection will be designed from the Collocation space to the same fiber frame that Qwest uses. The CLEC and Qwest will share the same fiber distributing frames for similar types and speeds of equipment, where technically feasible and space permitting.

Cost Elements

- **OCn Terminations** - Includes the costs for the bay, panel, connector and cables required to provide an uninterrupted path from the Collocation space to an existing fiber termination frame.
- **OCn Additional Connector** - Includes the costs for an additional connector, if requested.
- **OCn Cable Racking Shared** - Includes the recurring costs per 12 fibers for existing cable racking.
- **OCn Cable Racking Dedicated** - Includes the flat rate dedicated cable racking costs for fiber terminations.

C. Study Methodology

The costs were developed from material and installation labor costs provided by Subject Matter Experts (SME's) in Central Office Engineering and Outside Plant Engineering.

Monthly maintenance costs were developed by taking the element - specific expense and applying the account - code specific maintenance.

The investments/expenses from the above items were then entered into the WCP (Wholesale Cost Program) model, developed and used within Qwest.

Executive Summary

D. DESCRIPTION OF LONG RUN INCREMENTAL COSTS

Long Run Incremental Cost (LRIC) is the method Qwest uses to estimate product and service costs. It provides a measurement of costs over a period of time long enough to fully adjust to changes of output (including changes in the size of facilities, levels of investment, etc.) in order to optimally accommodate this change. This methodology is forward looking in nature (i.e. LRIC uses the latest technology costs or replacement costs.) Since LRIC is forward looking, it does *not* measure historic investment decisions of the corporation.

The Qwest LRIC format disaggregates the cost results on a unitized basis into the components shown below:

Total Service Long Run Incremental Cost (TSLRIC) --Total Service Long Run Incremental Cost is the forward looking cost avoided (or added) by discontinuing (or offering) an entire service or group of services in the most efficient manner, holding constant the production of all other services produced by the firm. This cost is often referred to in economic terms as direct cost.

Shared Cost (SC)-- The cost associated with the provision of multiple services (service family). This cost is not volume sensitive and is eliminated only if the entire service family is discontinued.

Total Service Long Run Incremental Costs plus Shared Costs (TSLRIC+SC)--The Total Service Long Run Incremental Costs for a service plus the Shared Costs of a family of services.

Total Element Long Run Incremental Cost (TELRIC) -- Total Element Long Run Incremental Cost, as defined by the Federal Communications Commission, is the sum of the forward looking direct cost incurred in the production of a network element (as opposed to an entire service), attributed costs considered as shared cost under TSLRIC terminology and selected administrative costs considered as common under TSLRIC terminology.

Common Cost (CC)

For **TSLRIC** purposes, common costs are the current cost incurred for the benefit of the enterprise as a whole. This cost does not vary with the provision of a service or a service family. These costs are sometimes referred to as *general overhead costs.* The Common Cost added to the TSLRIC + SC produces a **Fully Allocated Cost (FAC)** as required by Commission rules.

For **TELRIC** purposes, common costs are the current cost incurred for the benefit of the enterprise as a whole, after those cost that vary with the provisioning of individual network elements are removed. The costs removed from common for TELRIC purposes are included in the TELRIC itself. **Total Long Run Incremental Cost plus TELRIC common costs (TELRIC + CC)** form the basis for pricing Interconnection network elements. TELRIC + CC is the equivalent of fully allocated cost as the term is applied to network elements.

Typically, the cost identified by these cost categories include capital costs for depreciation, return, and income taxes. TSLRIC also includes ongoing operating costs for: administration expense, product management expense, pre sales expense, and business fees.

E. Study Assumptions

1. All cost are forward looking.
2. See "Input Sheet" worksheet on page 7.

Collocation: OCn Terminations

Rate Elements

State: SOUTH DAKOTA

	Recurring	Non-recurring
OCn TERMINATIONS (per 12 fibers)	$ 28.99	$ 1,658.35
OCn ADDITIONAL CONNECTOR (if applicable)	$ 0.84	$ 450.93
OCn CABLE RACKING SHARED (per 12 fibers)	$ 2.31	
OCn CABLE RACKING DEDICATED	$ 2.79	$ 1,507.33

Collocation: OCn Terminations

Study Name	*OCn Terminations*	
Study Requester	*Vicki Bishara*	
Type of Study	*TELRIC*	
Study ID	*6507*	
Cost Factor Group	*Interconnection*	
Study Applications		
Completion Date	*June 13, 2002*	
Cost Analyst	*Tom Wilkinson*	
Study Review	**Reviewer**	**Date**
	Vicki Bishara	*June 13, 2002*
Cost Models Used	**Model**	**Version and/or Release Date**
	Wholesale Cost Program	*Version 2.08*
	Cost Factor Databases	*Vintage: 02SD01E*
	Cost Factors Model (TELRIC)	
Cost Factors Used	**Factor**	**Effective Date**
	Capital Recovery	*04/02*
	Maintenance	*02/02*
	Ad Valorem	*02/02*
	Power	*01/01*
	Sales Tax	*01/01*
	Interest During Construction	*01/01*
	COE Land & Bldg	*02/02*
	Directly Assigned Factors	*04/02*
	Directly Attributable Factors	*04/02*
	Common	*04/02*
	Cost Of Money	*10.14%*
Inflation		
Major Cost Drivers		

Study Information	Value
Filing Month	June
Filing Year	2002
State	SD
State Full Name	SOUTH DAKOTA
Run Date	6/13/02
Factor Vintage	*02SD01E*
Study ID	6507

Model Assumptions	Value	Source
General		
Shipping Rate	13.99%	
Tax on Labor	*Yes*	
Work Completion Interval	90	
USWI Labor Percent	*69%*	

Network Inputs	Value	Source
Fiber Management Systems		
Shared Fiber Management System Length	*120*	SME
Dedicated Fiber Management System Length	*20*	SME
Shared Fiber Management System Capacity	*0.003266*	G. Investment Factors
Power Maint Expense Adj	*0.003266*	G. Investment Factors

Labor Rate Inputs		Value	Source
Aux Framing Installation	$	*11.91*	='Labor Rates'!$R$40
Cable Rack Installation	$	*21.32*	='Labor Rates'!$R$41
Cable Rack Panning Installation	$	*12.27*	='Labor Rates'!$R$42
Cable Horn Installation	$	*6.27*	='Labor Rates'!$R$43

ollocation Model Inputs		Value	Source
Power Adjustment			
Power Maint Expense Adj		*0.003266*	G. Investment Factors
Defaults and Overrides			
Aux Frame Channel - Expense per 20 foot channel	$	*50.10*	=D. Defaults and Overrides
Expense per Aux Frame Support	$	*6.90*	=D. Defaults and Overrides
Expense per Horn	$	*13.93*	=D. Defaults and Overrides
Expense for Pan	$	*26.31*	=D. Defaults and Overrides
Expense of Aux Frame Nuts and Bolts	$	*0.39*	=D. Defaults and Overrides

Specifics from Collocation 41 Job Breakdown		Value	Source
Framing Auxiliary V-Bolt Frame Support A	$	*18.78*	"overall aerial sup cost" tab, Cell AP41
Clip, Auxiary	$	*0.98*	"overall aerial sup cost" tab, Cell AR40
Aux Framing Splice	$	*29.08*	"overall aerial sup cost" tab, Cell AR25
Framing Auxiliary Bracing	$	*19.38*	"overall aerial sup cost" tab, Cell AQ43
Nut Spring 5/8-11 A8308-8	$	*1.74*	"overall aerial sup cost" tab, Cell AP50
Angles	$	*22.06*	"overall aerial sup cost" tab, Cell AQ54
Bolt U Sq 5/16-18 X 4 1/4 In	$	*3.63*	"overall aerial sup cost" tab, Cell AP42
Racking Total	$	*67.85*	"racking cost" tab, Cell AX21
Splice, Adjustable Runway	$	*20.74*	"racking cost" tab, Cell AT92
Cablerack Ladder Type Low Typ J Bolt 4	$	*6.39*	"racking cost" tab, Cell AT115

Collocation: OCn Terminations

Factors	Value
WCP Version	2.08
Cost of Money	10.14%
Capital Recovery	04/02
Maintenance	02/02
Ad Valorem	02/02
Power	01/01
Sales Tax	01/01
Interest During Construction	01/01
COE Land & Bldg	02/02
Directly Assigned Factors	04/02
Directly Attributable Factors	04/02
Common	04/02
Vintage	02SD01E
Investment Loadings	
Power	0.069700
Sales Tax	0.056400
Interest During Construction	0.006100
COE Land And Building Investment	
Building	0.199833
Land	0.003732
Investment Based Monthly Direct Costs	
Depreciation	0.109717
Cost Of Money	0.045455
Income Tax Expense	0.017189
Maintenance	0.025490
Ad Valorem Tax	0.009546
COE Land And Building Cost	
COE Building	0.151319
COE Land	0.155318
Marketing & Business Fees	
Product Management Expense	0.019957
Sales Expense	0.011877
Product Advertising Expense	0.000000
Business Fees (Other Operating Taxes)	0.001483
Other Direct Expenses	
Network Operations	0.034832
Network Support Assets	0.014703
General Support Assets	0.088742
General Purpose Computers	0.043342
Uncollectible	0.003786
Accounting & Finance Expense	0.007346
Human Resources Expense	0.008294
Information Management Expense	0.070887
Intangibles	0.000000
State Prescribed Directly Attributed	0.000000
Common	
Executive Expense	0.011267
Planning Expense	0.000525
External Relations Expense	0.037846
Legal Expense	0.004717
Other Procurement Expense	0.001860
Research & Development Expense	0.000006
Other General and Admin Expense	0.015064
State Prescribed Common	0.000000

Fiber Distribution Frame

NETWORK BAY

Collocation Reference ID	Equipment	Qty	Cost Per Unit	Total	Weighting	Grand Total
18	7-0 Medium To Large Office Configuration	1	$3,706	$3,706	30%	$1,112
19	7-0 Small Office Configuration	1	$10,500	$10,500	30%	$3,150
20	9-0 Small Office Configuration	1	$10,619	$10,619	15%	$1,593
21	11-6 Medium To Large Office Configuration	1	$4,189	$4,189	12.5%	$524
22	11-6 Small Office Configuration	1	$10,678	$10,678	12.5%	$1,335
					TOTAL	$7,713

ENDGUARD

Collocation Reference ID	Equipment	Qty	Cost Per Unit	Total	Weighting	Grand Total
23	7-0 12 Inch End Guard	2	$298	$596	60%	$358
24	9-0 12 Inch End Guard	2	$298	$596	15%	$89
25	11-6 12 Inch End Guard	2	$298	$596	25%	$149
					TOTAL	$596

FIBER SPLICE BAY

Collocation Reference ID	Equipment	Qty	Cost Per Unit	Total	Weighting	Grand Total
26	7-0 Fiber Splice Frame Skeleton	1	$1,245	$1,245	60%	$747
27	9-0 Fiber Splice Bay E/W Blank Panel Cbl Manag	1	$1,364	$1,364	15%	$205
28	11-6 Fiber Splice Frame Skeleton	1	$1,423	$1,423	25%	$356
					TOTAL	$1,307

INSTALLATION KIT

Collocation Reference ID	Equipment	Qty	Cost Per Unit	Total	Weighting	Grand Total
29	Installation Kit For 9 and 11-6 Frames	1	$404	$404	15%	$61
30	Installation Kit For 9 and 11-6 Frames	1	$404	$404	25%	$101
					TOTAL	$162

FIBER SPLICE BAY KIT

Collocation Reference ID	Equipment	Qty	Cost Per Unit	Total	Weighting	Grand Total
31	7-0 Fiber Splice Bay Kit	1	$3,490	$3,490	30%	$1,047
32	11-6 Fiber Splice Bay Kit	1	$3,668	$3,668	12.5%	$459
					TOTAL	$1,506

INTERBAY MANAGEMENT PANEL

Collocation Reference ID	Equipment	Qty	Cost Per Unit	Total	Weighting	Grand Total
33	7-0 Interbay Management Panel For Network Frameworks	2	$421	$842	60%	$505
34	9-0 Interbay Management Panel For Network Framework	2	$421	$842	15%	$126
35	11-6 Interbay Management Panel For Network Frameworks	2	$421	$842	25%	$211
					TOTAL	$842

COMMON EQUIPMENT

Collocation Reference ID	Equipment	Qty	Cost Per Unit	Total	Weighting	Grand Total
36	AC Raceway For Network Framework	1	$114	$114	33%	$38
37	Blank AC Raceway For Network Framework	1	$62	$62	67%	$42
38	5" AC Raceway Filler For Fiber Management Panels	1	$62	$62	100%	$62
39	FCM Panel E/W FC Connectors	1.7	$1,365	$2,321	100%	$2,321
40	OSP/Riser Cable Clamp	3.15	$30	$95	100%	$95
41	8" High 192 Splice Capacity	0.85	$878	$746	100%	$746
42	12 Splice Capacity Heat Shrink Fusion Splice	24	$39	$936	100%	$936
43	Communication Panel For FDF Framework Only	0.25	$1,089	$272	100%	$272
					TOTAL	$4,511

FIBER DISTRIBUTION FRAME TOTAL	**$16,636**
UTILIZATION FACTOR	**85%**
FIBER DISTRIBUTION FRAME GRAND TOTAL	**$19,571.98**
FIBER DISTRIBUTION FRAME PER 12 FIBERS	**$815.50**

NOTES:
THE WEIGHTING WERE DEVELOPED BY CAPACITY PROVISIONING PLANNERS. IT IS ASSUMED THAT 60% OF THE TIME THERE USW WILL USE A 7' FRAME WITH 30% OF THE TIME BEING IN A MED/LRG OFFICE AND 30% OF THE TIME IN A SML OFFICE. USW WILL USE A 9' FRAME 15% OF THE TIME AND AN 11'-6 FRAME THE OTHER 25% OF THE TIME (12.5% FOR MED/LRG OFFICE AND 12.5% FOR SML OFFICE)
AC RACEWAY IS IN EVERY THIRD FRAME WITH A BLANK IN THE OTHER 2 OUT OF 3 FRAMES.

Collocation: OCn Terminations

Fiber Distribution Panel Material

Collocation Reference ID	Equipment	Qty		Cost Per Unit	Total	FIBER CAPACITY PER 12 FIBERS	
13	Bay Mount FDP For OC3 Hand Off	1	$	130.00	$130.00	24	$65.00
14	Riser Cable Without Connectors	140	$	1.41	$197.40	12	$197.40
15	FCPC Connectors For One End No Cable	1	$	320.25	$320.25	12	$320.25
16	Fiber Placement	140	$	2.37	$331.10	12	$331.10
17	Fiber Patchcord 3 Meter FC To FC Assembly	12	$	22.00	$264.00	N/A	$264.00

TOTAL FIBER EXPENSE	**$1,177.75**
ADDITIONAL CONNECTOR	**$320.25**

NOTES:
THE DISTANCE BETWEEN THE CLEC EQUIPMENT AND THE FIBER DISTRIBUTION FRAME AVERAGES BETWEEN 120' AND 160'. FOR THIS STUDY WE ASSUMED THE AVERAGE TO BE 140'. FOR CABLE RACKING, 20' IS DEDICATED TO ONLY CLEC AND WILL NOT BE USED BY QWEST AND THE BALANCE 120' WILL BE SHARED WITH QWEST AND THE CLECS.

Collocation: OCn Terminations

Development for 10 feet of Cable Racking

AUXILIARY FRAMING	MATERIAL QUANTITY	UNIT COST	TOTAL MATERIAL	LABOR RATE	LABOR UNITS	TOTAL LABOR	TOTAL MATERIAL & LABOR
THREADED ROD SUPPORTS	7	$ 6.90	$48.29				$48.29
CLIPS	4	$ 0.98	$3.93				$3.93
AUX. FRAMING (20')	4	$ 50.10	$200.42	$ 11.91	20	$238.15	$438.56
3 HOLE SPLICE	2	$ 29.08	$58.17				$58.17
SUBTOTAL			**$310.81**			**$238.15**	**$548.95**

EARTHQUAKE LIGHT BRACING	MATERIAL QUANTITY	UNIT COST	TOTAL MATERIAL	LABOR RATE	LABOR UNITS	TOTAL LABOR	TOTAL MATERIAL & LABOR
SINGLE TR BRACE	5	$ 19.38	$96.92				$96.92
THREADED ROD	7	$ 6.90	$48.29				$48.29
UNISTRUT NUT	4	$ 1.74	$6.96				$6.96
SUBTOTAL			**$152.17**				**$152.17**

EARTHQUAKE HEAVY BRACING	MATERIAL QUANTITY	UNIT COST	TOTAL MATERIAL	LABOR RATE	LABOR UNITS	TOTAL LABOR	TOTAL MATERIAL & LABOR
SINGLE ANGLE BRACE	3	$ 19.38	$58.15				$58.15
ANGLE BRACE 6-0	3	$ 22.06	$66.18				$66.18
THREADED ROD	4	$ 6.90	$27.59				$27.59
END BOLT KIT	6	$ 3.63	$21.78				$21.78
LOCKWASHER, 5/8 TOOTH TYPE	12	$ 0.39	$4.72				$4.72
SUBTOTAL			**$178.42**				**$178.42**

MAIN AISLE CABLE RACK	MATERIAL QUANTITY	UNIT COST	TOTAL MATERIAL	LABOR RATE	LABOR UNITS	TOTAL LABOR	TOTAL MATERIAL & LABOR
CABLE RACK 1-BL	1	$ 67.85	$67.85	$ 21.32	10	$213.21	$281.05
PAN RACK	1	$ 26.31	$26.31	$ 12.27	10	$122.68	$148.98
CABLE HORN	13	$ 13.93	$181.10	$ 6.27	13	$81.55	$262.65
RACK SPLICE	1	$ 20.74	$20.74				$20.74
J BOLTS	2	$ 6.39	$12.77				$12.77
SUBTOTAL			**$308.78**			**$417.43**	**$726.21**

	MATERIAL & LABOR (10' of Cable Racking)
AUXILIARY FRAME	$548.95
EARTHQUAKE LIGHT BRACING	$152.17
EARTHQUAKE HEAVY BRACING	$178.42
MAIN AISLE CABLE RACK	$726.21
TOTAL	**$1,605.75**

	MATERIAL & LABOR (10' of Cable Racking)	# OF FEET	TOTAL MATERIAL & LABOR	FIBER CAPACITY	UTILIZATION FACTOR	SHARED COST (12 fibers)
CABLE RACK - SHARED	$1,605.75	120	$19,268.97	3744	85%	$72.66

	MATERIAL & LABOR (10' of Cable Racking)	# OF FEET	TOTAL MATERIAL & LABOR	# OF CLECS	COST PER CLEC (12 Fibers)
CABLE RACK - DEDICATED	$1,605.75	20	$3,211.50	3	$1,070.50

NOTES:

1. MATERIAL QUANTITY IS DETERMINED FROM STANDARD ENGINEERING REQUIREMENTS IN TEC. PUB. 77351, ISSUE D
2. MATERIAL COST IS BASED ON 41 ACTUAL COLLOCATION JOBS
3. ALL LABOR QUANTITIES ARE DETERMINED FROM THE INSTALLATION ESTIMATING GUIDELINE (BROADGUAGE WHICH IS THE CP MANUAL THAT IDENTIFIES THE INSTALLATION REQUIRED PER OPERATION CODE. THE OPERATION CODE

Collocation: OCn Terminations

ASSIGNED IDENTIFIES THE TYPE OF ACTIVITY (E.G.: AUX. FRAMING) AND THE PARTS WHICH NEED TO BE INSTALLED TO C
THAT ACTIVITY.

4. MAIN AISLE CABLE RACK COMES IN 10 LINEAL FT. INCREMENTS.
5. TOTAL LABOR FOR CABLE RACK IS BASED ON THE NUMBER OF CABLE RACKS THAT MUST BE INSTALLED.
6. THE LABOR FOR OVERALL AERIAL SUPPORT IS ASSINGED TO THE AUX FRAMING. THIS INCLUDES THE INSTALLATION OF
OF THE OTHER LISTED ITEMS.

Collocation: OCn Terminations

Collocation: OCn Terminations

COMPLETE

F ALL

Collocation: OCn Terminations

WCP Recurring

	Factor Value	FIBER DIST. FRAME	SHARED CABLE RACK
Investment		$815.4993	$72.6583
Investment Loadings			
Power	0.069700	$56.8403	$5.0643
Sales Tax	0.056400	$49.2000	$4.3836
Interest During Construction	0.006100	$5.6559	$0.5039
Loaded Investment		$927.1954	$82.6100
COE Land And Building Investment			
Building	0.199833	$185.2839	$16.5082
Land	0.003732	$3.4603	$0.3083
Investment With COE Land And Bldg		$1,115.9396	$99.4265
Investment Based Monthly Direct Costs			
Depreciation	0.109717	$8.4775	$0.7553
Cost Of Money	0.045455	$3.5121	$0.3129
Income Tax Expense	0.017189	$1.3281	$0.1183
Maintenance	0.025490	$1.9695	$0.1755
Ad Valorem Tax	0.009546	$0.7376	$0.0657
Investment Based Monthly Direct Costs		$16.0248	$1.4278
COE Land And Building Cost			
COE Building	0.151319	$2.3364	$0.2082
COE Land	0.155318	$0.0448	$0.0040
COE Land And Building Monthly Costs		$2.3812	$0.2122
Total Investment Based Monthly Costs		$18.4060	$1.6399
Marketing & Business Fees			
Product Management Expense	0.019957	$0.3673	$0.0327
Sales Expense	0.011877	$0.2186	$0.0195
Product Advertising Expense	0.000000	$0.0000	$0.0000
Business Fees (Other Operating Taxes)	0.001483	$0.0282	$0.0025
Marketing & Business Fees Total		$0.6141	$0.0547
Sub-Total Invst., B&C, Marketing		$19.0201	$1.6946

Collocation: OCn Terminations

WCP Recurring

	Factor Value	FIBER DIST. FRAME	SHARED CABLE RACK
Other Direct Expenses			
Network Operations	0.034832	$0.6625	$0.0590
Network Support Assets	0.014703	$0.2797	$0.0249
General Support Assets	0.088742	$1.6879	$0.1504
General Purpose Computers	0.043342	$0.8244	$0.0734
Uncollectible	0.003786	$0.0720	$0.0064
Accounting & Finance Expense	0.007346	$0.1397	$0.0124
Human Resources Expense	0.008294	$0.1577	$0.0141
Information Management Expense	0.070887	$1.3483	$0.1201
Intangibles	0.000000	$0.0000	$0.0000
State Prescribed Directly Attributed	0.000000	$0.0000	$0.0000
Total Other Direct Expenses		$5.1722	$0.4608
TELRIC		$24.1923	$2.1555
Common			
Executive Expense	0.011267	$0.2726	$0.0243
Planning Expense	0.000525	$0.0127	$0.0011
External Relations Expense	0.037846	$0.9156	$0.0816
Legal Expense	0.004717	$0.1141	$0.0102
Other Procurement Expense	0.001860	$0.0450	$0.0040
Research & Development Expense	0.000006	$0.0001	$0.0000
Other General and Admin Expense	0.015064	$0.3644	$0.0325
State Prescribed Common	0.000000	$0.0000	$0.0000
Common Costs		$1.7246	$0.1537
TELRIC + Common Costs		$25.9169	$2.3091

Collocation: OCn Terminations

WCP Non-Recurring

	Factor Value	FIBER PANEL	ADDITIONAL CONNECTOR	DEDICATED CABLE RACK
Expense		$1,177.75	$320.25	$1,070.50
Marketing & Business Fees				
Product Management Expense	0.019957	$ 23.50	$ 6.39	$ 21.36
Sales Expense	0.011877	$ 13.99	$ 3.80	$ 12.71
Product Advertising Expense	0.000000	$ -	$ -	$ -
Business Fees (Other Operating Taxes)	0.001483	$ 1.80	$ 0.49	$ 1.64
Marketing & Business Fees Total		$ 39.30	$ 10.69	$ 35.72
Sub-Total Invst., B&C, Marketing		$ 1,217.05	$ 330.94	$ 1,106.22
Other Direct Expenses				
Network Operations	0.034832	$ 42.39	$ 11.53	$ 38.53
Network Support Assets	0.014703	$ 17.89	$ 4.87	$ 16.27
General Support Assets	0.088742	$ 108.00	$ 29.37	$ 98.17
General Purpose Computers	0.043342	$ 52.75	$ 14.34	$ 47.95
Uncollectible	0.003786	$ 4.61	$ 1.25	$ 4.19
Accounting & Finance Expense	0.007346	$ 8.94	$ 2.43	$ 8.13
Human Resources Expense	0.008294	$ 10.09	$ 2.74	$ 9.17
Information Management Expense	0.070887	$ 86.27	$ 23.46	$ 78.42
Intangibles	0.000000	$ -	$ -	$ -
State Prescribed Directly Attributed	0.000000	$ -	$ -	$ -
Total Other Direct Expenses		$ 330.95	$ 89.99	$ 300.82
TELRIC		$ 1,548.00	$ 420.93	$ 1,407.03
Common				
Executive Expense	0.011267	$ 17.44	$ 4.74	$ 15.85
Planning Expense	0.000525	$ 0.81	$ 0.22	$ 0.74
External Relations Expense	0.037846	$ 58.59	$ 15.93	$ 53.25
Legal Expense	0.004717	$ 7.30	$ 1.99	$ 6.64
Other Procurement Expense	0.001860	$ 2.88	$ 0.78	$ 2.62
Research & Development Expense	0.000006	$ 0.01	$ 0.00	$ 0.01
Other General and Admin Expense	0.015064	$ 23.32	$ 6.34	$ 21.20
State Prescribed Common	0.000000	$ -	$ -	$ -
Common Costs		$ 110.35	$ 30.01	$ 100.30
TELRIC + Common Costs		$ 1,658.35	$ 450.93	$ 1,507.33

Direct CLEC to CLEC Interconnection

Monthly Maintenance

	Factor Value	FIBER PANEL	ADDITIONAL CONNECTOR	DEDICATED CABLE RACK
Investment		$1,177.75	$320.25	$1,070.50
Investment Based Costs				
Maintenance	0.022224	$2.18118	$0.59310	$1.98255
Marketing & Business Fees				
Product Management Expense	0.019957	$0.04353	$0.01184	$0.03957
Sales Expense	0.011877	$0.02591	$0.00704	$0.02355
Product Advertising Expense	0.000000	$0.00000	$0.00000	$0.00000
Business Fees (Other Operating Taxes)	0.001483	$0.00334	$0.00091	$0.00303
Marketing & Business Fees Total		$0.07277	$0.01979	$0.06615
Sub-Total Invst., B&C, Marketing		$2.25396	$0.61289	$2.04870
Other Direct Expenses				
Network Operations	0.034832	$0.07851	$0.02135	$0.07136
Network Support Assets	0.014703	$0.03314	$0.00901	$0.03012
General Support Assets	0.088742	$0.20002	$0.05439	$0.18181
General Purpose Computers	0.043342	$0.09769	$0.02656	$0.08880
Uncollectible	0.003786	$0.00853	$0.00232	$0.00776
Accounting & Finance Expense	0.007346	$0.01656	$0.00450	$0.01505
Human Resources Expense	0.008294	$0.01869	$0.00508	$0.01699
Information Management Expense	0.070887	$0.15978	$0.04345	$0.14523
Intangibles	0.000000	$0.00000	$0.00000	$0.00000
Total Other Direct Expenses		$0.61292	$0.16666	$0.55711
TELRIC		$2.86688	$0.77955	$2.60581
Common				
Executive Expense	0.011267	$0.03230	$0.00878	$0.02936
Planning Expense	0.000525	$0.00151	$0.00041	$0.00137
External Relations Expense	0.037846	$0.10850	$0.02950	$0.09862
Legal Expense	0.004717	$0.01352	$0.00368	$0.01229
Other Procurement Expense	0.001860	$0.00533	$0.00145	$0.00485
Research & Development Expense	0.000006	$0.00002	$0.00000	$0.00002
Other General and Admin Expense	0.015064	$0.04319	$0.01174	$0.03925
Common Costs		$0.20437	$0.05557	$0.18576
TELRIC + Common Costs		$3.07124	$0.83512	$2.79156

CONTINUATION

[111]



SOUTH DAKOTA

COLLOCATION: SPACE INQUIRY

QWEST

June 2002

Study ID: 6508

QWEST CORPORATION
Policy and Law

Table of Contents

	Page
I. Executive Summary	3
A. Purpose Scope, and Application	3
B. Description of Service	3
C. Study Methodology	3
D. Description of Long Run Incremental Cos	3
E. Study Assumptions	4
II. Rate Elements	5
III. Work Papers	6
Study Summary	6
Input Sheet	7
Labor and Materials	9
WCP Non-Recurring	10

Executive Summary

A. PURPOSE, SCOPE, AND APPLICATION

The purpose of this study is to determine the non-recurring costs that will be incurred by Qwest to provide Space Inquiry requests for customers.

This study develops Qwest average costs. Costs are based on a per unit basis depending upon which element is being requested.

B. DESCRIPTION OF SERVICE

Paragraph 58 of the FCC 706 ruling requires incumbent LECs to provide space availability report to Co-Providers requesting such a report. This report will be generated for one central office at a time.

The space inquiry report contains the following information for each central office requested:

1. Number of Collocators within the office;
2. Amount of Collocation space available (number of equipment bay spaces available);
3. Measures under way to make additional space available for collocation;
4. Modifications in the use of space since the last report;
5. Whether there is sufficient power;
6. Number of CLECs in queue; and
7. Whether the premise is equipped with DS3 capabilities.

C. Study Methodology

Costs were developed from material, engineering and installation labor costs provided by Subject Matter Experts (SME's) in Central Office Engineering and Outside Plant Engineering.

Monthly maintenance costs were developed by taking the element - specific expense and applying the account - code specific maintenance.

The investments/expenses from the above items were then entered into the WCP (Wholesale Cost Program) model, developed and used within QWEST Corporation.

D. DESCRIPTION OF LONG RUN INCREMENTAL COSTS

Long Run Incremental Cost (LRIC) is the method QWEST Corporation uses to estimate product and service costs. It provides a measurement of costs over a period of time long enough to fully adjust to changes of output (including changes in the size of facilities, levels of investment, etc.) in order to optimally accommodate this change. This methodology is forward looking in nature (i.e. LRIC uses the latest technology costs or replacement costs.) Since LRIC is forward looking, it does *not* measure historic investment decisions of the corporation.

The Qwest LRIC format disaggregates the cost results on a unitized basis into the components shown below:

Total Service Long Run Incremental Cost (TSLRIC) --Total Service Long Run Incremental Cost is the forward looking cost avoided (or added) by discontinuing (or offering) an entire service or group of services in the most efficient manner, holding constant the production of all other services produced by the firm. This cost is often referred to in economic terms as direct cost.

Shared Cost (SC)-- The cost associated with the provision of multiple services (service family). This cost is not volume sensitive and is eliminated only if the entire service family is discontinued

Total Service Long Run Incremental Costs plus Shared Costs (TSLRIC+SC)--The Total Service Long Run Incremental Costs for a service plus the Shared Costs of a family of services.

Total Element Long Run Incremental Cost (TELRIC) -- Total Element Long Run Incremental Cost, as defined by the Federal Communications Commission, is the sum of the forward looking direct cost incurred in the production of a network element (as opposed to an entire service), attributed costs considered as shared cost under TSLRIC terminology and selected administrative costs considered as common under TSLRIC terminology.

Common Cost (CC)

For **TSLRIC** purposes, common costs are the current cost incurred for the benefit of the enterprise as a whole. This cost does not vary with the provision of a service or a service family. These costs are sometimes referred to as *general overhead costs.* The Common Cost added to the TSLRIC + SC produces a **Fully Allocated Cost (FAC)** as required by Commission rules.

For **TELRIC** purposes, common costs are the current cost incurred for the benefit of the enterprise as a whole, after those cost that vary with the provisioning of individual network elements are removed. The costs removed from common for TELRIC purposes are included in the TELRIC itself. **Total Long Run Incremental Cost plus TELRIC common costs (TELRIC + CC)** form the basis for pricing Interconnection network elements. TELRIC + CC is the equivalent of fully allocated cost as the term is applied to network elements.

Typically, the cost identified by these cost categories include capital costs for depreciation, return, and income taxes. TSLRIC also includes ongoing operating costs for: administration expense, product management expense, pre sales expense, and business fees.

E. Study Assumptions

1. All costs are forward looking.
2. See "Inputs" worksheet.

RATE SUMMARY

	Unit	Investment	NRC	State
SPACE INQUIRY REPORT	Per office	$ 241.69	**$ 340.32**	OUTH DAKOTA

COLLOCATION: SPACE INQUIRY REPORT

Study Name	*Space Inquiry*	
Study Requester	*Vicki Bishara*	
Type of Study	*TELRIC*	
Study ID	*6508*	
Cost Factor Group	*Interconnection*	
Study Applications		
Completion Date	*June 13, 2002*	
Cost Analyst	*Tom Wilkinson*	
Study Review	**Reviewer**	**Date**
	Vicki Bishara	*June 13, 2002*
Cost Models Used	**Model**	**Version and/or Release Date**
	Wholesale Cost Program	*01/08/01 (Version 2.08)*
	Cost Factor Databases	*01/02/01 (Vintage: 02SD01E)*
	Cost Factors Model (TELRIC)	
Cost Factors Used	**Factor**	**Effective Date**
	Capital Recovery	*04/02*
	Maintenance	*02/02*
	Ad Valorem	*02/02*
	Power	*01/01*
	Sales Tax	*01/01*
	Interest During Construc	*01/01*
	COE Land & Bldg	*02/02*
	Directly Assigned Facto	*04/02*
	Directly Attributable Fa	*04/02*
	Common	*04/02*
	Cost Of Money	*10.14%*
Inflation		
Major Cost Drivers		

COLLOCATION: SPACE INQUIRY REPORT

Study Information

	Value
Filing Month	June
Filing Year	2002
State	SD
State Full Name	SOUTH DAKOTA
Run Date	6/13/02
Factor Vintage	*02SD01E*
Study ID	6508

Engineering Rate Inputs

	Value	Source
COMMON SYSTEMS PLANNING ENGINEERING CENTEF	$ *46.18*	
INFRASTRUCTURE AVAILABILITY CENTER (IAC)	$ *56.97*	

Labor Calculation

COMMON SYSTEMS PLANNING ENGINEERING CENTER (CSPEC)

NUMBER OF COLLOCATORS WITHING THE OFFICE	0.5	per hour
AMOUNT OF COLLO SPACE AVAILABLE IN OFFICE	2.5	per hour
ADDITIONAL SPACE FOR COLLOCATION	0.5	per hour
MODIFICATIONS IN USE OF SPACE SINCE THE LAST REPOR	0.5	per hour

Factors

	Value
WCP Version	*2.08*
Cost of Money	*10.14%*
Capital Recovery	*04/02*
Maintenance	*02/02*
Ad Valorem	*02/02*
Power	*01/01*
Sales Tax	*01/01*
Interest During Construction	*01/01*
COE Land & Bldg	*02/02*
Directly Assigned Factors	*04/02*
Directly Attributable Factors	*04/02*
Common	*04/02*
Vintage	*02SD01E*
Investment Loadings	
Power	*0.069700*
Sales Tax	*0.056400*
Interest During Construction	*0.006100*
COE Land And Building Investment	
Building	*0.199833*
Land	*0.003732*
Investment Based Monthly Direct Costs	
Depreciation	*0.109717*
Cost Of Money	*0.045455*
Income Tax Expense	*0.017189*
Maintenance	*0.025490*
Ad Valorem Tax	*0.009546*
COE Land And Building Cost	

COLLOCATION: SPACE INQUIRY REPORT

COE Building	*0.151319*
COE Land	*0.155318*
Marketing & Business Fees	
Product Management Expense	*0.019957*
Sales Expense	*0.011877*
Product Advertising Expense	*0.000000*
Business Fees (Other Operating Taxes)	*0.001483*
Other Direct Expenses	
Network Operations	*0.034832*
Network Support Assets	*0.014703*
General Support Assets	*0.088742*
General Purpose Computers	*0.043342*
Uncollectible	*0.003786*
Accounting & Finance Expense	*0.007346*
Human Resources Expense	*0.008294*
Information Management Expense	*0.070887*
Intangibles	*0.000000*
State Prescribed Directly Attributed	*0.000000*
Common	
Executive Expense	*0.011267*
Planning Expense	*0.000525*
External Relations Expense	*0.037846*
Legal Expense	*0.004717*
Other Procurement Expense	*0.001860*
Research & Development Expense	*0.000006*
Other General and Admin Expense	*0.015064*
State Prescribed Common	*0.000000*

COLLOCATION: SPACE INQUIRY REPORT

LABOR CALCULATIONS

Work Item	Hours Per Request	Time Minutes	Prob	Applied Time (Minutes)	Labor /Hour	Cost	Rate Calculation
A	B	C	D	E	F	G	
				C * D			
-COMMON SYSTEMS PLANNING ENGINEERING CENTER (CSPEC)							
NUMBER OF COLLOCATORS WITHIN THE OFFICE							
Verify and match documentation; determine number of Collocators in office	0.5	30	1.000	30.00	$46.18	$23.09	*Space Report*
AMOUNT OF COLLO SPACE AVAILABLE IN OFFICE							
Database verification (COEFM), communication with Real Estate, SICM's, CO Techniciaions and IOF if grooming or moving circuits is identified.	2.5	150	1.000	150.00	$46.18	$115.45	*Space Report*
ADDITIONAL SPACE FOR COLLOCATION							
Check to see if building addition is in any planning stage. Check with switch group to see about any upcoming conversions/removals.	0.5	30	1.000	30.00	$46.18	$23.09	*Space Report*
MODIFICATIONS IN USE OF SPACE SINCE THE LAST REPORT							
Pull report from COE-FM.	0.5	30	1.000	30.00	$46.18	$23.09	*Space Report*
Subtotal - COMMON SYSTEMS PLANNING ENGINEERING CENTER (CSPEC)				**240.00**		**$184.72**	
-INFRASTRUCTURE AVAILABILITY CENTER (IAC)							
QUOTE PREPARATION AND PROCESSING							
Review for completeness resolve discrepancies, Quote Preparation and processing, data basing	1.0	60	1.000	60.00	$56.97	$56.97	*Space Report*
Subtotal - INFRASTRUCTURE AVAILABILITY CENTER (IAC)				**60.00**		**$56.97**	
Total						**$241.69**	

WCP Non-Recurring

	Factor Value		Space Inquiry Report
Expense			$241.69
Marketing & Business Fees			
Product Management Expense	0.019957	$	4.82
Sales Expense	0.011877	$	2.87
Product Advertising Expense	0.000000	$	-
Business Fees (Other Operating Ta)	0.001483	$	0.37
Marketing & Business Fees Total		$	8.06
Sub-Total Invst., B&C, Marketing		$	249.75
Other Direct Expenses			
Network Operations	0.034832	$	8.70
Network Support Assets	0.014703	$	3.67
General Support Assets	0.088742	$	22.16
General Purpose Computers	0.043342	$	10.82
Uncollectible	0.003786	$	0.95
Accounting & Finance Expense	0.007346	$	1.83
Human Resources Expense	0.008294	$	2.07
Information Management Expense	0.070887	$	17.70
Intangibles	0.000000	$	-
State Prescribed Directly Attributed	0.000000		$0.00
Total Other Direct Expenses		$	67.92
TELRIC		$	317.67
Common			
Executive Expense	0.011267	$	3.58
Planning Expense	0.000525	$	0.17
External Relations Expense	0.037846	$	12.02
Legal Expense	0.004717	$	1.50
Other Procurement Expense	0.001860	$	0.59
Research & Development Expense	0.000006	$	0.00
Other General and Admin Expense	0.015064	$	4.79
State Prescribed Common	0.000000		$0.00
Common Costs		$	22.65
TELRIC + Common Costs		$	340.32

CONTINUATION

[114]



SOUTH DAKOTA

COLLOCATION:
SPACE OPTIONING

Study ID: 6509

QWEST
June 2002

QWEST CORPORATION
Policy and Law

Table of Contents

	Page
I. Executive Summary	3
A. Purpose Scope, and Application	3
B. Description of Service	3
C. Study Methodology	4
D. Description of Long Run Incremental Cos	4
E. Study Assumptions	4
II. Rate Elements	5
III. Work Papers	6
Study Summary	6
Input Sheet	7
Labor Calculations	9
WCP Non-Recurring	10

Executive Summary

A. PURPOSE, SCOPE, AND APPLICATION

The purpose of this study is to determine the expenses and recurring costs that will be incurred by Qwest to provide Space Optioning requests for customers.

This study develops Qwest average costs. Costs are based on a per unit basis depending upon which element is being requested.

B. DESCRIPTION OF SERVICE

The collocation Space Option will permit CLECs, Qwest, and Qwest Affiliates to option space for future collocation needs. Space Options are subject to first right of refusal requests by other parties with firm collocation orders.

Space Option Administration Fee is a nonrecurring fee for all Collocation Space Option requests and covers the processing of application, feasibility, common space engineering, records management, and administration of the First Right of Refusal process.

C. Study Methodology

Costs were developed from material, engineering and installation labor costs provided by Subject Matter Experts (SME's) in Central Office Engineering and Outside Plant Engineering.

The investments/expenses from the above items were then entered into the WCP (Wholesale Cost Program) model, developed and used within QWEST Corporation.

D. DESCRIPTION OF LONG RUN INCREMENTAL COSTS

Long Run Incremental Cost (LRIC) is the method QWEST Corporation uses to estimate product and service costs. It provides a measurement of costs over a period of time long enough to fully adjust to changes of output (including changes in the size of facilities, levels of investment, etc.) in order to optimally accommodate this change. This methodology is forward looking in nature (i.e. LRIC uses the latest technology costs or replacement costs.) Since LRIC is forward looking, it does *not* measure historic investment decisions of the corporation.

The Qwest LRIC format disaggregates the cost results on a unitized basis into the components shown below:

Total Service Long Run Incremental Cost (TSLRIC) --Total Service Long Run Incremental Cost is the forward looking cost avoided (or added) by discontinuing (or offering) an entire service or group of services in the most efficient manner, holding constant the production of all other services produced by the firm. This cost is often referred to in economic terms as direct cost.

Shared Cost (SC)-- The cost associated with the provision of multiple services (service family). This cost is not volume sensitive and is eliminated only if the entire service family is discontinued.

Total Service Long Run Incremental Costs plus Shared Costs (TSLRIC+SC)--The Total Service Long Run Incremental Costs for a service plus the Shared Costs of a family of services.

Total Element Long Run Incremental Cost (TELRIC) -- Total Element Long Run Incremental Cost, as defined by the Federal Communications Commission, is the sum of the forward looking direct cost incurred in the production of a network element (as opposed to an entire service), attributed costs considered as shared cost under TSLRIC terminology and selected administrative costs considered as common under TSLRIC terminology.

Common Cost (CC)

For **TSLRIC** purposes, common costs are the current cost incurred for the benefit of the enterprise as a whole. This cost does not vary with the provision of a service or a service family. These costs are sometimes referred to as *general overhead costs.* The Common Cost added to the TSLRIC + SC produces a **Fully Allocated Cost (FAC)** as required by Commission rules.

For **TELRIC** purposes, common costs are the current cost incurred for the benefit of the enterprise as a whole, after those cost that vary with the provisioning of individual network elements are removed. The costs removed from common for TELRIC purposes are included in the TELRIC itself. **Total Long Run Incremental Cost plus TELRIC common costs (TELRIC + CC)** form the basis for pricing Interconnection network elements. TELRIC + CC is the equivalent of fully allocated cost as the term is applied to network elements.

Typically, the cost identified by these cost categories include capital costs for depreciation, return, and income taxes. TSLRIC also includes ongoing operating costs for: administration expense, product management expense, pre sales expense, and business fees.

E. Study Assumptions

1. All costs are forward looking.

RATE SUMMARY

Collocation: Space Option

	Unit	Investment	Loaded Rate
Space Option Administration Fee	Per request	$ 814.41	$ **1,146.74**

SPACE OPTIONING

Study Name	*COLLOCATION: SPACE OPTIONING*	
Study Requester	*Vicki Bishara*	
Type of Study	*TELRIC*	
Study ID	*6509*	
Cost Factor Group	*Interconnection*	
Study Applications		
Completion Date	*June 13, 2002*	
Cost Analyst	*Tom Wilkinson*	
Study Review	**Reviewer**	**Date**
	Vicki Bishara	*June 13, 2002*
Cost Models Used	**Model**	**Version and/or Release Date**
	Wholesale Cost Program	*01/08/01 (Version 2.08)*
	Cost Factor Databases	*01/02/01 (Vintage: 02SD01E)*
	Cost Factors Model (TELRIC)	
Cost Factors Used	**Factor**	**Effective Date**
	Capital Recovery	*04/02*
	Maintenance	*02/02*
	Ad Valorem	*02/02*
	Power	*01/01*
	Sales Tax	*01/01*
	Interest During Constructio	*01/01*
	COE Land & Bldg	*02/02*
	Directly Assigned Factors	*04/02*
	Directly Attributable Facto	*04/02*
	Common	*04/02*
	Cost Of Money	*10.14%*
Inflation		
Major Cost Drivers		

Study Information

	Value
Filing Month	June
Filing Year	2002
State	SD
State Full Name	SOUTH DAKOTA
Run Date	6/13/02
Factor Vintage	*02SD01E*
Study ID	6509

Model Assumptions

	Value		Description/Source
Engineering			
Common Systems Planning Engineering Center (CSPEC)	$	46.18	per hour
Product Management Implementation (PMI)	$	56.97	per hour
Infrastructure Availability Center Labor Rate	$	56.97	per hour

Labor Calculation Defaults

PRODUCT MANAGEMENT IMPLEMENTATION (PMI)		
JOB MONITORING, ORDER VALIDATION, SCHEDULING		
ICC (scheduling, project managing, MOP)	2.0	per hour
INFRASTRUCTURE AVAILABILITY CENTER (IAC)		
APPLICATION PROCESSING		
Order Validation	1.0	per hour
Quote	1.0	per hour
Billing Work	1.0	per hour
CPMC First Right of Refusal	2.0	per hour
COMMON SYSTEMS PLANNING ENGINEERING CENTER (CSPEC)		
FIRST RIGHT OF REFUSAL		
Implementation of First Right of Refusal	1.0	per hour
COMMON SPACE ENGINEERING		
Engineering	7.0	per hour
First Right of Refusal	1.0	per hour

Factors

	Value
WCP Version	*2.08*
Cost of Money	*10.14%*
Capital Recovery	*04/02*
Maintenance	*02/02*
Ad Valorem	*02/02*
Power	*01/01*
Sales Tax	*01/01*
Interest During Construction	*01/01*
COE Land & Bldg	*02/02*
Directly Assigned Factors	*04/02*
Directly Attributable Factors	*04/02*
Common	*04/02*
Vintage	*02SD01E*
Investment Loadings	
Power	*0.069700*
Sales Tax	*0.056400*
Interest During Construction	*0.006100*
COE Land And Building Investment	
Building	*0.199833*
Land	*0.003732*
Investment Based Monthly Direct Costs	
Depreciation	*0.109717*

SPACE OPTIONING

Cost Of Money	*0.045455*
Income Tax Expense	*0.017189*
Maintenance	*0.025490*
Ad Valorem Tax	*0.009546*
COE Land And Building Cost	
COE Building	*0.151319*
COE Land	*0.155318*
Marketing & Business Fees	
Product Management Expense	*0.019957*
Sales Expense	*0.011877*
Product Advertising Expense	*0.000000*
Business Fees (Other Operating Taxes)	*0.001483*
Other Direct Expenses	
Network Operations	*0.034832*
Network Support Assets	*0.014703*
General Support Assets	*0.088742*
General Purpose Computers	*0.043342*
Uncollectible	*0.003786*
Accounting & Finance Expense	*0.007346*
Human Resources Expense	*0.008294*
Information Management Expense	*0.070887*
Intangibles	*0.000000*
State Prescribed Directly Attributed	*0.000000*
Common	
Executive Expense	*0.011267*
Planning Expense	*0.000525*
External Relations Expense	*0.037846*
Legal Expense	*0.004717*
Other Procurement Expense	*0.001860*
Research & Development Expense	*0.000006*
Other General and Admin Expense	*0.015064*
State Prescribed Common	*0.000000*

LABOR CALCULATIONS

Work Item	Hours Per Request	Time Minutes	Prob	Applied Time (Minutes)	Labor /Hour	Cost
A	B	C	D	E	F	G
				C * D		
-PRODUCT MANAGEMENT IMPLEMENTATION (PMI)						
JOB MONITORING, ORDER VALIDATION, SCHEDULING						
Overall project management and coordination	2.0	120	1.000	120.00	$ 56.97	$ 113.94
Subtotal - PRODUCT MANAGEMENT IMPLEMENTATION (PMI)				**120.00**		**$113.94**
-COMMON SYSTEMS PLANNING ENGINEERING CENTER (CSPEC)						
FIRST RIGHT OF REFUSAL						
Implementation of First Right of Refusal	1.0	60	1.000	60.00	$ 46.18	$ 46.18
COMMON SPACE ENGINEERING						
Engineering	7.0	420	1.000	420.00	$ 46.18	$ 323.26
First Right of Refusal	1.0	60	1.000	60.00	$ 46.18	$ 46.18
Subtotal - COMMON SYSTEMS PLANNING ENGINEERING CENTER (CSPEC)				**540.00**		**$415.62**
-INFRASTRUCTURE AVAILABILITY CENTER (IAC)						
APPLICATION PROCESSING						
Order Validation	1.0	60	1.000	60.00	$ 56.97	$ 56.97
Quote	1.0	60	1.000	60.00	$ 56.97	$ 56.97
Billing Work	1.0	60	1.000	60.00	$ 56.97	$ 56.97
CPMC First Right of Refusal	2.0	120	1.000	120.00	$ 56.97	$ 113.94
Subtotal - INFRASTRUCTURE AVAILABILITY CENTER (IAC)				**300.00**		**$284.85**

WCP Non-Recurring

	Factor Value		Space Option Admin. Fee
Expense			$814.41
Marketing & Business Fees			
Product Management Expense	0.019957	$	16.25
Sales Expense	0.011877	$	9.67
Product Advertising Expense	0.000000		
Business Fees (Other Operating Taxes)	0.001483	$	1.25
Marketing & Business Fees Total		$	27.17
Sub-Total Invst., B&C, Marketing		$	841.58
Other Direct Expenses			
Network Operations	0.034832	$	29.31
Network Support Assets	0.014703	$	12.37
General Support Assets	0.088742	$	74.68
General Purpose Computers	0.043342	$	36.48
Uncollectible	0.003786	$	3.19
Accounting & Finance Expense	0.007346	$	6.18
Human Resources Expense	0.008294	$	6.98
Information Management Expense	0.070887	$	59.66
Intangibles	0.000000	$	-
State Prescribed Directly Attributed	0.000000		$0.00
Total Other Direct Expenses		$	228.85
TELRIC		$	1,070.44
Common			
Executive Expense	0.011267	$	12.06
Planning Expense	0.000525	$	0.56
External Relations Expense	0.037846	$	40.51
Legal Expense	0.004717	$	5.05
Other Procurement Expense	0.001860	$	1.99
Research & Development Expense	0.000006	$	0.01
Other General and Admin Expense	0.015064	$	16.12
State Prescribed Common	0.000000		$0.00
Common Costs		$	76.31
TELRIC + Common Costs		$	1,146.74



Executive Summary

South Dakota

Unbundled Packet Switching UNE

Prescribed Lives

Cost Study

June 2002

Study ID #6517

Service Cost and Economic Analysis Organization

TABLE OF CONTENTS

Topic	Page
A. Purpose, Scope and Application	1
B. Description of Service	1
C. Study Methodology	1
D. Description of Total Element Long Run Incremental Costs	2
E. Study Assumptions	3
F. Study Summary	4
G. Results Summary	5

A. PURPOSE, SCOPE AND APPLICATION

The purpose of this study is to estimate the long run incremental costs incurred by QWEST in provisioning this service.

This study includes all recurring costs directly assigned with this service. Costs provided in this study are intended as input for management decision making and cost support for commission filings.

B. DESCRIPTION OF SERVICE

Unbundled Packet Switching (UPS) utilizes Asynchronus Transfer Mode (ATM) technology to provide the functionality of delivering packet data units via a virtual channel between a Co-Provider demarcation point and the Remote Terminal Digital Subscriber Line Access Multiplexer (DSLAM). UPS includes use of transport facilities, DSLAM functionality and ATM electronics necessary to generate a virtual channel. It may also include use of the Unbundled Network Element (UNE) Unbundled Distribution Subloop.

For UPS, the demarcation point is between the Intermediate Connecting Distribution Frame (ICDF) and Digital Cross Connect (DSX) and will always be in the central office housing the Qwest ATM switch. Collocation is required for UPS but does not limit Co-Providers to the central offices with ATM switches. If the Co-Provider wants to utilize a collocation site in a central office without an ATM switch, the Co-Provider must order an additional UNE service to connect to the central office housing the ATM switch.

Two new UNE's are required to enable Packet Switching functionality with this technology:

1. Unbundled Packet ATM Switch Interface Port at a DS1 and DS3 level
2. Unbundled Packet Switch Customer Channel – this element consists of DSLAM functionality and a virtual channel that will serve as the originating and terminating points for Virtual Path Connections (VPC) and Virtual Channel Connections (VCC).

UPS utilizes the Qwest feeder cable to the Remote DSLAM, but at the customers discretion they may provide their own feeder from their own central office. The UPS Interface Port and UPS Customer Channel are new elements unique to the UPS functionality.

C. STUDY METHODOLOGY

Costs for this service are calculated through the use of a program developed by Qwest. The Wholesale model converts installed investments to LRIC monthly costs by applying appropriate Investment and Expense factors to the installed investments.

D. DESCRIPTION OF LONG RUN INCREMENTAL COSTS

Long Run Incremental cost (LRIC) is the method Qwest Communications uses to estimate product and service costs. It provides a measurement of costs over a period of time long enough to fully adjust to changes of output (including changes in the size of facilities, levels of investment, etc.) in order to optimally accommodate this change. This methodology is forward looking in nature (i.e. LRIC uses the latest technology costs or replacement costs). Since LRIC is forward looking, it does not measure historic investment decisions of the corporation.

The Qwest LRIC format diaggregates the cost results on a unitized basis into the components shown below:

Investment Based & Marketing Costs – Inv. Based & Mktg. costs are the forward-looking costs that are caused by offering the service in the long run. These costs would not be incurred if the network element were not offered. Inv. Based & Mktg. Costs reflect the per-unit forward-looking cost associated with providing the entire network element in the most efficient manner, holding constant the production of all other network elements produced by the firm. In a recurring cost study, Inv. Based & Mktg. Costs include the capital costs (e.g., depreciation, cost of money, income taxes) and maintenance costs associated with the investment required to provision a network element, along with other network element-specific costs such as product management expense. In a nonrecurring cost study, Inv. Based & Mktg. Costs include the one-time labor expenses associated with establishing or changing a network element, along with other network element-specific costs such as product management expense.

Network Support Costs – Include network administration and engineering costs. These costs are not directly associated with a single network element, but are generally caused by the provision of a group of network elements. These costs are sometimes categorized as shared or group-related costs.

Other Direct Expense Costs – Include various costs such as accounting and finance expenses and the cost of computer systems. These costs are not directly associated with a single network element. However, these costs vary with the provision of all network elements, and are not common to the entire firm.

Total Element Long Run Incremental Costs (TELRIC) - represent the sum of Total Direct Costs and Directly Attributed Costs. This measure of costs includes the forward-looking costs incurred in the provision of a network element. This measure of costs is consistent with TELRIC as defined by the FCC.

Common Costs – Are associated with the enterprise as a hole. These costs do vary based on the total size of the firm, but do not vary with the provisioning of individual network elements. These costs are avoidable only with the elimination of the entire firm, and are sometimes referred to as *general overhead costs.*

Fully Allocated Costs – Represent the sum of Total Element Long Run Incremental Cost plus Common Costs.

E. STUDY ASSUMPTIONS

1. All costs displayed are at a 2002 cost level.

2. We consider all equipment and facilities to be forward looking equipment.

3. Remote Terminal (RT) Configuration Weighting were provided by Product Management. These weightings were to reflect the anticipated deployment of each configuration. It was stated that Vendor 1 would be deployed 87.5% of the time, with Vendor 2 deployed 7.2%, Vendor 3 at 4.8% and Vendor 4 at 0.5%.

4. Product Management and the Network Engineer, decided to use the Vendor 1 as the cost surrogate for the Vendor 3 and Vendor 4 configurations. This was required due to a lack of equipment costs for the Vendor 3 and Vendor 4 Configurations. To do this we were asked to add the 4.8 % occurrence weighting for Vendor 3, and the 0.5% occurrence weighting for Vendor 4 to the Vendor 1 percentage.

5. The Network Engineer identified equipment in the Vendor 1 that would be shared between the Wholesale Colocation Study and this study. The identified equipment had a 85% weighting applied to capture the costs that were not recovered in the Wholesale Colocation study.

6. The Network Engineer identified equipment in the Vendor 2 Configuration that would be shared between the Wholesale Colocation study, which allocates space for wholesale use, and this study. The identfied equipment had a 75% weighting applied to capture the costs not recovered in the Wholesale Colocation study. In addition, some equipment was identified as being shared between this data service and telephony services. This additional equipment had a 37.5% weighting applied to it. (Data/Telephony Weighting: 50% occurrence x 75% not picked up in Colocation Study = 37.5% weighting.)

7. Product Management provided us with a 100% weighting for the Test Set. This weighting indicates that 100% of the costs of the Test Set should be recovered in the Retail and UNE cost studies.

8. Product management provided us with the assumption that on average there would be 31.3 RT's being served out of each Central Office.

9. The Network engineer provided us with the assumption that 60 subscribers could be serviced over a DS1, with all subscribers receiving UBR level service.

10. The Switching Modeler provided us with the assumption that each ASM-B card could have 8DS1's terminated in the card.

11. The Vendor 1 Card adjustment factor of 97% was supplied by the Colocation Cost Analyst. This adjustment factor was developed to appropriately remove cabinet costs that were included in the cost of the card. The 97% is the remaining costs not recovered in the Wholesale Colocation Study.

Study Name	*Unbundled Packet Switching UNE*	
Study Requester	*Brett Fesler*	
Type of Study	*TELRIC*	
Study ID	*6517*	
Cost Factor Group	*Interconnection*	
Study Applications	*Interconnection*	
Completion Date	*June 3, 2002*	
Cost Analyst	*Brett Bode*	
Study Review	**Reviewer**	**Date**
	Paul Branecki	*June 3, 2002*
Models Used	**Model**	**Version**
	Wholesale Cost Program	*2.08*
	Cost Factor Databases	*02SD01E*
	Cost Factors Model (TELRIC)	*00V2*
	DS1 NAC Model	*V 11003.0 SD*
Cost Factors Used	**Factor**	**Effective Date**
	Capital Recovery	*01/01*
	Maintenance	*01/01*
	Ad Valorem	*01/01*
	COE Land & Bldg	*01/01*
	Directly Assigned Factors	*01/01*
	Billing & Collection (PL)	*01/01*
	Directly Attributable Factors	*01/01*
	Common	*01/01*
	Cost Of Money	*10.14%*
Inflation		
Major Cost Drivers		

Parameter File: H:\MRSOMA1\users\bxbode\public\Cost Studies\D A Hotel\Wholesale Studies\Packet Switching UNE\South Dakota UPS WP #6
State(s): SD
Database Vintage: 02SD01E
Factors For: Interconnection
Report Type: ICM Format
Decimal Places: 2
Costs Format: Monthly
Group Totals: Yes
ACF Input: H:\MRSOMA1\users\bxbode\public\Cost Studies\D A Hotel\Wholesale Studies\Packet Switching UNE\South Dakota UPS WP #6517.
ACF Output: H:\MRSOMA1\users\bxbode\public\Cost Studies\D A Hotel\Wholesale Studies\Packet Switching UNE\South Dakota UPS WP #651
Investment: H:\MRSOMA1\users\bxbode\public\Cost Studies\D A Hotel\Wholesale Studies\Packet Switching UNE\South Dakota UPS WP #6517
Output: H:\MRSOMA1\users\bxbode\public\Cost Studies\D A Hotel\Wholesale Studies\Packet Switching UNE\South Dakota UPS WP #6517.xls,

State: South Dakota

Description	USOC	Loaded Investment	Direct Expense	Invst. Based & Mktg.	Network Support	Other Direct Expenses	TELRIC	Common	TELRIC + Common
Unbundled Packet Switch Customer Channel		$799.33	$5.03	$18.10	$0.90	$4.92	$23.02	$1.64	$24.66
Unbundled Packet Switch Port DS3 Interface		$12,393.74	$0.00	$197.64	$9.79	$53.74	$251.38	$17.92	$269.30
Unbundled Packet Switch Port DS1 Interface		$7,212.47	$0.00	$115.01	$5.70	$31.28	$146.29	$10.43	$156.72
Unbundled Packet Switch DSLAM Functionality		$640.05	$5.03	$15.56	$0.77	$4.23	$19.79	$1.41	$21.20

Instructions

This file contains the South Dakota Unbundled Packet Switching UNE Work Papers

To print, use File, Print and select: **Entire Workbook**

Do not establish links



WORKPAPERS

SOUTH DAKOTA

Unbundled Packet Switching UNE

PRESCRIBED LIVES

COST STUDY

JUNE 2002

Study ID #6517

Service Cost And Economic Analysis Organizations

TABLE OF CONTENTS

ITEM	TAB
Study Summary	A
Cost Output File	B
Total Product Costs Tab	C
Investment Cost Calculations Tab	D
Cost Study Inputs Page	E
Read Me Tab	F
Vendor 1 Configuration Calculations	G
Vendor 2 Configuration Calculations	H
Vendor 3 Configuration Calculations	I
Vendor 4 Configuration Calculations	J
Combined Remote Terminal Configuration Calculations	K
Configurations for DSLAM Functionality	L
Demand Calculations	M
Port Investment Builder Worksheet	N
Cable & Racking Investment Builder Worksheet	O
Summary of Investments and Expenses	P
Cost Model Investment File	Q
Study Parameters	R
Annual Cost Factors Inputs	S
Annual Cost Factors Outputs	T

Study Name	*Unbundled Packet Switching UNE*	
Study Requester	*Brett Fesler*	
Type of Study	*TELRIC*	
Study ID	*6517*	
Cost Factor Group	*Interconnection*	
Study Applications	*Interconnection*	
Completion Date	*May 29, 2002*	
Cost Analyst	*Brett Bode*	
Study Review	**Reviewer**	**Date**
	Paul Branecki	*May 29, 2002*
Models Used	**Model**	**Version**
	Wholesale Cost Program	*2.08*
	Cost Factor Databases	*02SD01E*
	Cost Factors Model (TELRIC)	*02V1*
	DS1 NAC Model	*DS1V11003.0 SD*
Cost Factors Used	**Factor**	**Effective Date**
	Capital Recovery	*04/02*
	Maintenance	*02/02*
	Ad Valorem	*02/02*
	COE Land & Bldg	*02/02*
	Marketing Factors	*04/02*
	Billing & Collection (PL)	*01/01*
	Other Direct Expenses	*04/02*
	Common	*04/02*
	Cost Of Money	*10.14%*
Inflation		
Major Cost Drivers		

Parameter File: H:\MRSOMA1\users\bxbode\public\Cost Studies\D A Hotel\Wholesale Studies\Packet Switching UNE\South Dakota UPS WP #6517.xls, Sheet "WINPC3 Parameters"
State(s): SD
Database Vintage: 02SD01E
Factors For: Interconnection
Report Type: ICM Format
Decimal Places: 2
Costs Format: Monthly
Group Totals: Yes
ACF Input: H:\MRSOMA1\users\bxbode\public\Cost Studies\D A Hotel\Wholesale Studies\Packet Switching UNE\South Dakota UPS WP #6517.xls, Sheet "WINPC3 ACF Inputs"
ACF Output: H:\MRSOMA1\users\bxbode\public\Cost Studies\D A Hotel\Wholesale Studies\Packet Switching UNE\South Dakota UPS WP #6517.xls, Sheet "WINPC3 ACF Outputs"
Investment: H:\MRSOMA1\users\bxbode\public\Cost Studies\D A Hotel\Wholesale Studies\Packet Switching UNE\South Dakota UPS WP #6517.xls, Sheet "WINPC3 Investments"
Output: H:\MRSOMA1\users\bxbode\public\Cost Studies\D A Hotel\Wholesale Studies\Packet Switching UNE\South Dakota UPS WP #6517.xls, Sheet "WINPC3 Output"

State: South Dakota

Description	USOC	Loaded Investment	Direct Expense	Invst. Based & Mktg.	Network Support	Other Direct Expenses	TELRIC	Common	TELRIC + Common
Unbundled Packet Switch Customer Channel		$799.33	$5.03	$18.10	$0.90	$4.92	$23.02	$1.64	$24.66
Unbundled Packet Switch Port DS3 Interface		$12,393.74	$0.00	$197.64	$9.79	$53.74	$251.38	$17.92	$269.30
Unbundled Packet Switch Port DS1 Interface		$7,212.47	$0.00	$115.01	$5.70	$31.28	$146.29	$10.43	$156.72
Unbundled Packet Switch DSLAM Functionality		$640.05	$5.03	$15.56	$0.77	$4.23	$19.79	$1.41	$21.20

5/29/0 .39 PM

Row	South Dakota	Source or Calculation	Factor Value	Unbundled Packet Switch Customer Channel	Unbundled Packet Switch Port DS3 Interface	Unbundled Packet Switch Port DS1 Interface	Unbundled Packet Switch DSLAM Functionality
			A	B	C	D	E
1	**Investment**	sl r"Total" cD		799.33	12,393.74	7,212.47	640.05
2							
3	***Investment Based Costs***	***sl r"Total" cK***		12.43	190.44	110.82	9.99
4							
5	Direct Expenses			5.03	0.00	0.00	5.03
6	Miscellaneous Expenses			0.00	0.00	0.00	0.00
7	Billing & Collection - PL	cA*(r8-r6)	0.004304	0.05	0.82	0.48	0.04
8	***Total Investment Based + Billing & Collection***			17.51	191.26	111.30	15.06
9							
10	***Marketing & Business Fees***						
11	Product Management Expense	cA*(r8-r6)	0.019957	0.35	3.82	2.22	0.30
12	Sales Expense	cA*(r8-r6)	0.011877	0.21	2.27	1.32	0.18
13	Product Advertising Expense	cA*(r8-r6)	0.000000	0.00	0.00	0.00	0.00
14	Business Fees (Other Operating Taxes)	cA*(Sum(r8:r13)-r6)	0.001483	0.03	0.29	0.17	0.02
15	***Marketing & Business Fees Total***	***Sum r11:r14***		0.58	6.38	3.71	0.50
16							
17	***Sub-Total Invst., B & C, Mktg***	***r8 + r15***		18.10	197.64	115.01	15.56
18							
19	***Other Direct Expenses***						
20	Network Operations	cA*(r17-r6)	0.034832	0.63	6.88	4.01	0.54
21	Network Support Assets	cA*(r17-r6)	0.014703	0.27	2.91	1.69	0.23
22	General Support Assets	cA*(r17-r6)	0.088742	1.61	17.54	10.21	1.38
23	General Purpose Computers	cA*(r17-r6)	0.043342	0.78	8.57	4.98	0.67
24	Uncollectible	cA*(r17-r6)	0.003786	0.07	0.75	0.44	0.06
25	Accounting & Finance Expense	cA*(r17-r6)	0.007346	0.13	1.45	0.84	0.11
26	Human Resources Expense	cA*(r17-r6)	0.008294	0.15	1.64	0.95	0.13
27	Information Management Expense	cA*(r17-r6)	0.070887	1.28	14.01	8.15	1.10
28	Intangibles	cA*(r17-r6)	0.000000	0.00	0.00	0.00	0.00
29	***Total Other Direct Expenses***	***Sum r20:r28***		4.92	53.74	31.28	4.23
30							
31	***TELRIC***	***r17 + r29***		23.02	251.38	146.29	19.79
32							
33	***Common***						
34	Executive Expense	cA*(r31-r6)	0.011267	0.26	2.83	1.65	0.22
35	Planning Expense	cA*(r31-r6)	0.000525	0.01	0.13	0.08	0.01
36	External Relations Expense	cA*(r31-r6)	0.037846	0.87	9.51	5.54	0.75
37	Legal Expense	cA*(r31-r6)	0.004717	0.11	1.19	0.69	0.09
38	Other Procurement Expense	cA*(r31-r6)	0.001860	0.04	0.47	0.27	0.04
39	Research & Development Expense	cA*(r31-r6)	0.000006	0.00	0.00	0.00	0.00
40	Other General and Admin Expense	cA*(r31-r6)	0.015064	0.35	3.79	2.20	0.30
41	***Common Costs***	***Sum r34:r40***		1.64	17.92	10.43	1.41
42							
43	***TELRIC + Common Costs***	***r31 + r41***		24.66	269.30	156.72	21.20

5/29/02
South Dakota

Unbundled Packet Switching UNE

Acct	FRC	Account Name	Investment	Depreciation	Cost Of Money	Income Tax	Ad Valorem	Maintenance	Switch RTU	Total Capital Costs
Unbundled Packet Switch Customer Channel										
2232.3	357C	Circuit Equipment - Other Digital Equipment	5.74	0.05	0.02	0.01	0.00	0.01	0.00	0.10
2232.2	257C	Circuit Equipment - Pair Gain - Digital	511.42	4.68	1.94	0.73	0.41	0.45	0.00	8.20
2232.2	257CP	Pair Gain - Digital (Customer Premise)	10.88	0.10	0.04	0.02	0.01	0.01	0.00	0.17
2232.2	257CS	Subscriber Pair Gain Equipment (SONET)	0.56	0.01	0.00	0.00	0.00	0.00	0.00	0.01
2232.2	257CSP	Subscriber Pair Gain (SONET - Customer Prer	0.98	0.01	0.00	0.00	0.00	0.00	0.00	0.02
2441	4C	Conduit System	8.71	0.02	0.05	0.02	0.01	0.01	0.00	0.09
2422.11,.21	5C	Underground Cable - Metallic	6.58	0.05	0.03	0.01	0.01	0.02	0.00	0.11
2423.11,.21	45C	Buried Cable - Metallic	72.33	0.37	0.34	0.13	0.06	0.32	0.00	1.22
2422.12,.22	85C	Underground Cable - NonMetallic	0.05	0.00	0.00	0.00	0.00	0.00	0.00	0.00
2423.12,.22	845C	Buried Cable - NonMetallic	0.79	0.00	0.00	0.00	0.00	0.00	0.00	0.01
2426.2	862C	Intrabuilding Network Cable - NonMetallic	0.00	0.00	0.00	0.00	0.00	0.00	0.00	0.00
2212	377C	Digital Switch	63.06	0.57	0.24	0.09	0.05	0.05	0.00	1.00
2111	20C	Land	2.17	0.00	0.02	0.01	0.00	0.00		0.03
2121	110C	Building	116.06	0.25	0.72	0.27	0.09	0.12		1.46
		Total	**799.33**	**6.10**	**3.41**	**1.29**	**0.64**	**0.99**	**0.00**	**12.43**
Unbundled Packet Switch Port DS3 Interface										
2212	377C	Digital Switch	10,297.53	93.46	39.00	14.75	8.19	8.60	0.00	163.99
2111	20C	Land	38.43	0.00	0.31	0.12	0.03	0.04		0.50
2121	110C	Building	2,057.78	4.43	12.84	4.86	1.64	2.19		25.95
		Total	**12,393.74**	**97.89**	**52.15**	**19.72**	**9.86**	**10.83**	**0.00**	**190.44**
Unbundled Packet Switch Port DS1 Interface										
2212	377C	Digital Switch	5,992.59	54.39	22.69	8.58	4.77	5.00	0.00	95.43
2111	20C	Land	22.36	0.00	0.18	0.07	0.02	0.02		0.29
2121	110C	Building	1,197.52	2.58	7.47	2.83	0.95	1.27		15.10
		Total	**7,212.47**	**56.96**	**30.35**	**11.48**	**5.74**	**6.30**	**0.00**	**110.82**
Unbundled Packet Switch DSLAM Functionality										
2232.2	257C	Circuit Equipment - Pair Gain - Digital	474.72	4.34	1.80	0.68	0.38	0.42	0.00	7.61
2423.11,.21	45C	Buried Cable - Metallic	68.22	0.35	0.32	0.12	0.05	0.30	0.00	1.15
2423.12,.22	845C	Buried Cable - NonMetallic	0.46	0.00	0.00	0.00	0.00	0.00	0.00	0.01
2111	20C	Land	1.77	0.00	0.01	0.01	0.00	0.00		0.02
2121	110C	Building	94.87	0.20	0.59	0.22	0.08	0.10		1.20
		Total	**640.05**	**4.89**	**2.73**	**1.03**	**0.51**	**0.82**	**0.00**	**9.99**

Service	Unbundled Packet Switching UNE
Jurisdiction	South Dakota
Cost Year	2002
Study Date	May 30, 2002

Section A

Central Office Connecting Channels
Source: NAC Model

		FRC	Total Direct Category 1	Total Direct Category 2	Total Direct Category 1 & 2
	DS1 COCC				
DS1 COCC		257C	$ 14.72	$ -	$ 14.72

Section B

Port Investments
Source: Switching Model

	FRC	Total Investment
OC3 Port	377C	$ 15,450.39
DS3 Port	377C	$ 10,297.53
DS1 Port	377C	$ 5,992.59

Section C

Cost of Money Assumption
Source: Factors Group

Cost of Money = 10.14%

Section D

Cable Racking and Frame
Source: Colocation Analyst

Description	FRC	Cost
Cable Racking and Frame	377C	$ 29.40

Section E

Vendor 1 Configuration Equipment Investments

Vendor Proprietary

Section F

Vendor 2 Configuration Equipment Investments

Vendor Proprietary

Section G

Vendor 1 Retail/Wholesale Allocation Assumption

Source: Network Engineer

Dedicated Retail Equipment :	100%
Retail/Wholesale Shared Equipment :	85%

Section H

Remote Terminal (RT) Configuration Weighting Assumptions

Source: Product Manager

	Percentage of Total Deployment
Vendor 1	**87.5%**
Vendor 2	**7.2%**
Vendor 3	**4.8%**
Vendor 4	**0.5%**

Section I

Test Set Weighting Assumptions

Source: Product Management

Percentage of Test Set Invesments associated with Data service :	100.0%

Section J

Vendor 2 Retail/ Wholesale Allocation Assumptions

Source: Network Engineer

Dedicated Retail Equipment =	100.0%
Retail/Wholesale Shared Equipment =	75.0%
Telephony/Data shared Equipment =	37.5%

Section K

Vendor 3 Configuration Cost Assumption

Source: Network Engineer

It was determined by the Network Engineer, that for a cost estimate for this cost study we would use the Vendor 1 costs, as a cost surrogate.

Section L

Common Cabling & Termination Blocks for Remote Terminals
Source: Network Engineer

DA Hotel Cabling

Cable placement for new DA Hotel & splicing at FDI only.

	FRC	Quantity	Unit Cost	Amount
C-COPPER-BURIED-24GA_400PR (per sheath foot)	45C	50	$ 2.75	$137.61
Engineering labor per sheath foot (.0112)	45C	50	$ 53.00	$29.68
C-COPPER-BURIED-24GA_50PR (per sheath foot)	45C	50	$ 0.44	$22.19
Engineering labor per sheath foot (.0074)	45C	50	$ 53.00	$19.61
C-STRCTR-CONDUIT-1_DUCT_BUR, Qty = 3 @ 35'	45C	105	$ 1.02	$107.10
C-STRCTR-INRDUCT-BUR-2DUCT, Qty = 1 @ 35'	845C	35	$ 1.42	$49.72
C-ACTVTY-CONDUIT-ENC-DIRBUR_1DUC	45C	35	$ 3.04	$106.30
C-ACTVTY-CONDUIT-TRENCH_ADDITION, times 4	45C	140	$ 0.49	$68.25
C-ACTVTY-COPPER-PULL_CNDT, times 2	45C	100	$ 1.17	$117.13

Termination Blocks

New Termination Blocks (placed at existing FDI)

C-XCON-SAI-PED-25PR_BLOCKS	45C	8	$ 117.11	$936.88

Engineering

DWP Engineering	45C	8	$ 53.00	$424.00

Splicing Cable at FDI, per Pair

C-ACTVTY-COPPER-SPLICE-BURIED (perpr)	45C	200	$ 0.38	$75.24
8 terminal blocks @ 25 pairs prblock = 200 pairs				

Section M

Demand - Average Subscribers per Remote Terminal
Source: Product Manager

Year	Total Number of Subscribers	Total # of Remote Terminals	Average Cumulative Subscribers per Remote Terminal	Average Incremental Subscribers per Remote Terminal
2001	56448	2400	24	24
2002	186105	5765	33	9
2003	343501	5765	60	27
2004	499796	5765	87	27
2005	614922	5765	107	20
2006	712164	5765	124	17
2007	804005	5765	140	16

Section N

Additional Maintenance Costs from Vendor 1
Source: Network Engineer

	FRC	Total Expense
Maintenance Costs on a Annual Basis	257X	$ 7,000.00

Section O

Average Amount of DA's per Central Office Assumption
Source: Product Manager

Average DA's per CO = 31.3

Section P

Number of Subscribers a DS1 will Carry Assumption
Source: Network Engineer

Subscribers per DS1 = 60

Section Q

ASM-B Card Costs and Assumptions

Source: Switching Model

	FRC	Total Investment
ASM-B Card	377C	$ 5,992.59

Number of DS1's that can terminate in an ASM-B Card = 8

Section R

Feeder Costs

Source: NAC Model

DS1 Feeder Costs

	FRC	Total Direct Category 1	Total Direct Category 2	Total Direct Category 1 & 2
CIRCUIT-OTHER DIGITAL	357C	$ 271.55	$ -	$ 271.55
CIRCUIT-DIGITAL	257C	$ 707.83		$ 707.83
CIRCUIT-DIGITAL -PREMISES	257CP	$ 523.16	$ 3.97	$ 527.13
CONDUIT SYSTEMS	4C	$ 424.22	$ -	$ 424.22
UNDERGROUND CABLE METALLIC	5C	$ 322.69	$ -	$ 322.69
BURIED CABLE METALLIC	45C	$ 207.94	$ -	$ 207.94
CIRCUIT-DIGITAL AT RT	257C	$ 982.15	$ 79.39	$ 1,061.54

Fiber Feeder Costs

	FRC	Total Direct Category 1	Total Direct Category 2	Total Direct Category 1 & 2
CIRCUIT-OTHER DIGITAL	357C	$ 302.70	$ -	$ 302.70
CIRCUIT-DIGITAL	257C	$ 29.78	$ -	$ 29.78
CIRCUIT-DIGITAL -PREMISES	257CP	$ 202.40	$ 1.41	$ 203.80
CIRCUIT-DIGITAL SONET	257CS	$ 841.41	$ -	$ 841.41
CIRCUIT-DIGITAL SONET-PREMISES	257CSP	$ 1,459.39	$ 10.90	$ 1,470.29
CONDUIT SYSTEMS	4C	$ 94.64	$ -	$ 94.64
UNDERGROUND CABLE NONMETALLIC	85C	$ 72.32	$ -	$ 72.32
BURIED CABLE NONMETALLIC	845C	$ 486.68	$ -	$ 486.68
INTRABUILDING CABLE NONMETALLIC	862C	$ 2.84	$ -	$ 2.84

Section S

Vendor 4 Configuration Cost Assumption

Source: Network Engineer

It was determined by the Network Engineer, that for a cost estimate for this cost study we would use the Vendor 1 costs, as a cost surrogate.

Section T

Mic Cables

Source: Network Engineer

	FRC	Total Investment
20 m. MIC Cable	257C	$ 70.29
5 m. MIC Cable	257C	$ 56.42

Section U

Equipment Utilization Assumption

Source: Product Management

Equipment Utilization	90%

Section V

Common Cabling Retail/Wholesale Allocation Assumption

Source: Network Engineer

Retail Dedicated Equipment	100%
Retail/Wholesale Shared Equipment	75%

Section W

Wholesale Cabnet Cost Adjustment to Vendor 1 Card Material Cost

Source: Colocation Cost Analyst

Adjustment Factor =	97%

CONFIDENTIAL

#1

CONFIDENTIAL

2

	A	B	C	D	E	F	G
1	Investment						
2	STUDY	Unbundled Packet Switching UNE					
3	DATE	5/30/02					
4	PRODUCT	TELRIC					
5	GROUP	Unbundled Packet Switch Customer Channel					
6	LOADED	SD	5.7381456716	0.	0.	357C	CIRCUIT-OTHER DIGITAL
7	LOADED	SD	511.4165989873	0.	0.	257C	CIRCUIT-DIGITAL
8	LOADED	SD	10.8822068149	0.	0.	257CP	CIRCUIT-DIGITAL -PREMISES
9	LOADED	SD	0.5626081575	0.	0.	257CS	CIRCUIT-DIGITAL SONET
10	LOADED	SD	0.9831094584	0.	0.	257CSP	CIRCUIT-DIGITAL SONET-PREMISES
11	LOADED	SD	8.7112752223	0.	0.	4C	CONDUIT SYSTEMS
12	LOADED	SD	6.578333524	0.	0.	5C	UNDERGROUND CABLE METALLIC
13	LOADED	SD	72.3338248202	0.	0.	45C	BURIED CABLE METALLIC
14	LOADED	SD	0.0483580854	0.	0.	85C	UNDERGROUND CABLE NONMETALLIC
15	LOADED	SD	0.7871651057	0.	0.	845C	BURIED CABLE NONMETALLIC
16	LOADED	SD	0.001898087	0.	0.	862C	INTRABUILDING CABLE NONMETALLIC
17	LOADED	SD	63.0633048822	0.	0.	377C	Digital Electronic Switching
18	COMMON	SD	5.0272583741	0.	0.		CIRCUIT-DIGITAL Expense
19	GROUP	Unbundled Packet Switch Port DS3 Interface					
20	LOADED	SD	10,297.53	0.	0.	377C	DIGITAL ELECTRONIC SWITCHING
21	GROUP	Unbundled Packet Switch Port DS1 Interface					
22	LOADED	SD	5,992.59	0.	0.	377C	DIGITAL ELECTRONIC SWITCHING
23	GROUP	Unbundled Packet Switch DSLAM Functionality					
24	LOADED	SD	474.7238160766	0.	0.	257C	CIRCUIT-DIGITAL
25	LOADED	SD	68.2224540622	0.	0.	45C	BURIED CABLE METALLIC
26	LOADED	SD	0.4617493478	0.	0.	845C	BURIED CABLE NONMETALLIC
27	COMMON	SD	5.0272583741	0.	0.		CIRCUIT-DIGITAL Expense
28	GROUP						

	A	B
1	Parameter	
2	SD	
3	7	
4	2	
5	Monthly	12
6	Yes	
7	No	
8		
9	11	
10	6517	

	A	B	C	D	E	F	G	H	I	J	K	L	M
1	ACFIN												
2	02SD01E												
3	377C	DEPR-AVG	COM-AVG	IT-AVG	MTNC-TOT	RTU-SWIT	ADVAL	BLDG	LAND	PRODMAN	SALESEXP	ADVER	BF
4	20C	DEPR-AVG	COM-AVG	IT-AVG	MTNC-TOT	ADVAL	PRODMAN	SALESEXP	ADVER	BF	NTWKOP	NTWKST	GENLST
5	110C	DEPR-AVG	COM-AVG	IT-AVG	MTNC-TOT	ADVAL	PRODMAN	SALESEXP	ADVER	BF	NTWKOP	NTWKST	GENLST
6	257C	DEPR-AVG	COM-AVG	IT-AVG	MTNC-TOT	ADVAL	BLDG	LAND	PRODMAN	SALESEXP	ADVER	BF	NTWKOP
7	357C	DEPR-AVG	COM-AVG	IT-AVG	MTNC-TOT	ADVAL	BLDG	LAND	PRODMAN	SALESEXP	ADVER	BF	NTWKOP
8	5C	DEPR-AVG	COM-AVG	IT-AVG	MTNC-TOT	ADVAL	BLDG	LAND	PRODMAN	SALESEXP	ADVER	BF	NTWKOP
9	85C	DEPR-AVG	COM-AVG	IT-AVG	MTNC-TOT	ADVAL	BLDG	LAND	PRODMAN	SALESEXP	ADVER	BF	NTWKOP
10	45C	DEPR-AVG	COM-AVG	IT-AVG	MTNC-TOT	ADVAL	BLDG	LAND	PRODMAN	SALESEXP	ADVER	BF	NTWKOP
11	845C	DEPR-AVG	COM-AVG	IT-AVG	MTNC-TOT	ADVAL	BLDG	LAND	PRODMAN	SALESEXP	ADVER	BF	NTWKOP
12	862C	DEPR-AVG	COM-AVG	IT-AVG	MTNC-TOT	ADVAL	BLDG	LAND	PRODMAN	SALESEXP	ADVER	BF	NTWKOP
13	4C	DEPR-AVG	COM-AVG	IT-AVG	MTNC-TOT	ADVAL	BLDG	LAND	PRODMAN	SALESEXP	ADVER	BF	NTWKOP
14	257CS	DEPR-AVG	COM-AVG	IT-AVG	MTNC-TOT	ADVAL	BLDG	LAND	PRODMAN	SALESEXP	ADVER	BF	NTWKOP
15	257CP	DEPR-AVG	COM-AVG	IT-AVG	MTNC-TOT	ADVAL	BLDG	LAND	PRODMAN	SALESEXP	ADVER	BF	NTWKOP
16	257CSP	DEPR-AVG	COM-AVG	IT-AVG	MTNC-TOT	ADVAL	BLDG	LAND	PRODMAN	SALESEXP	ADVER	BF	NTWKOP

	N	O	P	Q	R	S	T	U	V	W	X	Y	Z	AA
1														
2														
3	NTWKOP	NTWKST	GENLST	COMPTR	UNCOLL	ACCNT	HREXP	INTAN	EXEC	PLAN	EXTERN	INFOR	LEGAL	PROCR
4	COMPTR	UNCOLL	ACCNT	HREXP	INTAN	EXEC	PLAN	EXTERN	INFOR	LEGAL	PROCR	RDEXP	GENL	BC
5	COMPTR	UNCOLL	ACCNT	HREXP	INTAN	EXEC	PLAN	EXTERN	INFOR	LEGAL	PROCR	RDEXP	GENL	BC
6	NTWKST	GENLST	COMPTR	UNCOLL	ACCNT	HREXP	INTAN	EXEC	PLAN	EXTERN	INFOR	LEGAL	PROCR	RDEXP
7	NTWKST	GENLST	COMPTR	UNCOLL	ACCNT	HREXP	INTAN	EXEC	PLAN	EXTERN	INFOR	LEGAL	PROCR	RDEXP
8	NTWKST	GENLST	COMPTR	UNCOLL	ACCNT	HREXP	INTAN	EXEC	PLAN	EXTERN	INFOR	LEGAL	PROCR	RDEXP
9	NTWKST	GENLST	COMPTR	UNCOLL	ACCNT	HREXP	INTAN	EXEC	PLAN	EXTERN	INFOR	LEGAL	PROCR	RDEXP
10	NTWKST	GENLST	COMPTR	UNCOLL	ACCNT	HREXP	INTAN	EXEC	PLAN	EXTERN	INFOR	LEGAL	PROCR	RDEXP
11	NTWKST	GENLST	COMPTR	UNCOLL	ACCNT	HREXP	INTAN	EXEC	PLAN	EXTERN	INFOR	LEGAL	PROCR	RDEXP
12	NTWKST	GENLST	COMPTR	UNCOLL	ACCNT	HREXP	INTAN	EXEC	PLAN	EXTERN	INFOR	LEGAL	PROCR	RDEXP
13	NTWKST	GENLST	COMPTR	UNCOLL	ACCNT	HREXP	INTAN	EXEC	PLAN	EXTERN	INFOR	LEGAL	PROCR	RDEXP
14	NTWKST	GENLST	COMPTR	UNCOLL	ACCNT	HREXP	INTAN	EXEC	PLAN	EXTERN	INFOR	LEGAL	PROCR	RDEXP
15	NTWKST	GENLST	COMPTR	UNCOLL	ACCNT	HREXP	INTAN	EXEC	PLAN	EXTERN	INFOR	LEGAL	PROCR	RDEXP
16	NTWKST	GENLST	COMPTR	UNCOLL	ACCNT	HREXP	INTAN	EXEC	PLAN	EXTERN	INFOR	LEGAL	PROCR	RDEXP

	AB	AC	AD
1			
2			
3	RDEXP	GENL	BC
4			
5			
6	GENL	BC	
7	GENL	BC	
8	GENL	BC	
9	GENL	BC	
10	GENL	BC	
11	GENL	BC	
12	GENL	BC	
13	GENL	BC	
14	GENL	BC	
15	GENL	BC	
16	GENL	BC	

	A	B	C	D	E	F	G	H	I	J	K	L	M
1	ACFOUT Factors For: Interconnection												
2	*-Run Done With Database Vintage: 02SD01E, Dated: 04/08/02*												
3	*-Wholesale Cost Program (TELRIC) Data Base released 04/02 (02SD01E).*												
4	*-Factors loaded from Factors Model (Expense Module), Version 02V1.*												
5	*-CAPITAL RECOVERY factors released 04/02 and based on 10.14% Cost*												
6	*Of Money. No 1-10 year factors developed.*												
7	*-MAINTENANCE factors released 02/02.*												
8	*-RTU factors released 02/01.*												
9	*-AD VALOREM Tax released 02/02.*												
10	*-DIRECTLY ASSIGNED expense factors released 04/02.*												
11	*-BUSINESS FEES released 04/02.*												
12	*-COMMON Expense released 04/02.*												
13	*-TOTAL INSTALLED FACTORS (TIF) released 01/01.*												
14	*-POWER investment factors released 01/01.*												
15	*-SALES TAX released 01/01.*												
16	*-TELCO Engineering factors released 01/01.*												
17	*-INTEREST DURING CONSTRUCTION released 01/01.*												
18	*-LAND AND BUILDING factors released 02/02.*												
19	*-DIRECTLY ATTRIBUTABLE expense factors released 04/02.*												
20	*-SALES EXPENSE factor released 04/02.*												
21	*-PRODUCT MANAGEMENT factor released 04/02.*												
22	*-BILLING & COLLECTION factor released 01/01.*												
23	*-PROVISIONING factors released 01/01.*												
24	*-TELEPHONE PLANT INDEX released 01/01.*												
25	*-STRUCTURE RATIO released 01/01.*												
26													
27													
28													
29													
30													
31													
32													
33													

	A	B	C	D	E	F	G	H	I	J	K	L	M	N	O
34															
35															
36															
37															
38	State:	South Dakota													
39															
40	**ACCOUNTS**	**DEPR-AVG**	**COM-AVG**	**IT-AVG**	**MTNC-TOT**	**RTU-SWIT**	**ADVAL**	**BLDG**	**LAND**	**PRODMAN**	**SALESEXP**	**ADVER**	**BF**	**NTWKOP**	**NTWKST**
41	377C	0.108910	0.045445	0.017186	0.010018	0.000000	0.009546	0.199833	0.003732	0.019957	0.011877	0.000000	0.001483	0.034832	0.014703
42	20C	0.000000	0.096506	0.036495	0.012770	0.000000	0.009546	0.000000	0.000000	0.019957	0.011877	0.000000	0.001483	0.034832	0.014703
43	110C	0.025821	0.074869	0.028313	0.012770	0.000000	0.009546	0.000000	0.000000	0.019957	0.011877	0.000000	0.001483	0.034832	0.014703
44	257C	0.109717	0.045455	0.017189	0.010529	0.000000	0.009546	0.199833	0.003732	0.019957	0.011877	0.000000	0.001483	0.034832	0.014703
45	357C	0.109717	0.045455	0.017189	0.025490	0.000000	0.009546	0.199833	0.003732	0.019957	0.011877	0.000000	0.001483	0.034832	0.014703
46	5C	0.090987	0.056203	0.021254	0.030615	0.000000	0.009546	0.000000	0.000000	0.019957	0.011877	0.000000	0.001483	0.034832	0.014703
47	85C	0.070742	0.056557	0.021388	0.018901	0.000000	0.009546	0.000000	0.000000	0.019957	0.011877	0.000000	0.001483	0.034832	0.014703
48	45C	0.060902	0.057059	0.021578	0.052623	0.000000	0.009546	0.000000	0.000000	0.019957	0.011877	0.000000	0.001483	0.034832	0.014703
49	845C	0.060902	0.057059	0.021578	0.023075	0.000000	0.009546	0.000000	0.000000	0.019957	0.011877	0.000000	0.001483	0.034832	0.014703
50	862C	0.062692	0.058372	0.022074	0.017856	0.000000	0.009546	0.000000	0.000000	0.019957	0.011877	0.000000	0.001483	0.034832	0.014703
51	4C	0.021443	0.064600	0.024429	0.007242	0.000000	0.009546	0.000000	0.000000	0.019957	0.011877	0.000000	0.001483	0.034832	0.014703
52	257CS	0.109717	0.045455	0.017189	0.010529	0.000000	0.009546	0.199833	0.003732	0.019957	0.011877	0.000000	0.001483	0.034832	0.014703
53	257CP	0.109717	0.045455	0.017189	0.010529	0.000000	0.009546	0.000000	0.000000	0.019957	0.011877	0.000000	0.001483	0.034832	0.014703
54	257CSP	0.109717	0.045455	0.017189	0.010529	0.000000	0.009546	0.000000	0.000000	0.019957	0.011877	0.000000	0.001483	0.034832	0.014703

	P	Q	R	S	T	U	V	W	X	Y	Z	AA	AB	AC	AD
34															
35															
36															
37															
38															
39															
40	GENLST	COMPTR	UNCOLL	ACCNT	HREXP	INTAN	EXEC	PLAN	EXTERN	INFOR	LEGAL	PROCR	RDEXP	GENL	BC
41	0.088742	0.043342	0.003786	0.007346	0.008294	0.000000	0.011267	0.000525	0.037846	0.070887	0.004717	0.001860	0.000006	0.015064	0.004304
42	0.088742	0.043342	0.003786	0.007346	0.008294	0.000000	0.011267	0.000525	0.037846	0.070887	0.004717	0.001860	0.000006	0.015064	0.004304
43	0.088742	0.043342	0.003786	0.007346	0.008294	0.000000	0.011267	0.000525	0.037846	0.070887	0.004717	0.001860	0.000006	0.015064	0.004304
44	0.088742	0.043342	0.003786	0.007346	0.008294	0.000000	0.011267	0.000525	0.037846	0.070887	0.004717	0.001860	0.000006	0.015064	0.004304
45	0.088742	0.043342	0.003786	0.007346	0.008294	0.000000	0.011267	0.000525	0.037846	0.070887	0.004717	0.001860	0.000006	0.015064	0.004304
46	0.088742	0.043342	0.003786	0.007346	0.008294	0.000000	0.011267	0.000525	0.037846	0.070887	0.004717	0.001860	0.000006	0.015064	0.004304
47	0.088742	0.043342	0.003786	0.007346	0.008294	0.000000	0.011267	0.000525	0.037846	0.070887	0.004717	0.001860	0.000006	0.015064	0.004304
48	0.088742	0.043342	0.003786	0.007346	0.008294	0.000000	0.011267	0.000525	0.037846	0.070887	0.004717	0.001860	0.000006	0.015064	0.004304
49	0.088742	0.043342	0.003786	0.007346	0.008294	0.000000	0.011267	0.000525	0.037846	0.070887	0.004717	0.001860	0.000006	0.015064	0.004304
50	0.088742	0.043342	0.003786	0.007346	0.008294	0.000000	0.011267	0.000525	0.037846	0.070887	0.004717	0.001860	0.000006	0.015064	0.004304
51	0.088742	0.043342	0.003786	0.007346	0.008294	0.000000	0.011267	0.000525	0.037846	0.070887	0.004717	0.001860	0.000006	0.015064	0.004304
52	0.088742	0.043342	0.003786	0.007346	0.008294	0.000000	0.011267	0.000525	0.037846	0.070887	0.004717	0.001860	0.000006	0.015064	0.004304
53	0.088742	0.043342	0.003786	0.007346	0.008294	0.000000	0.011267	0.000525	0.037846	0.070887	0.004717	0.001860	0.000006	0.015064	0.004304
54	0.088742	0.043342	0.003786	0.007346	0.008294	0.000000	0.011267	0.000525	0.037846	0.070887	0.004717	0.001860	0.000006	0.015064	0.004304

Qwest

ACCESS TO OPERATIONAL SUPPORT SYSTEMS FOR INTERCONNECTION - Line Sharing Study ID 6536

SOUTH DAKOTA

2002 RECURRING COST STUDY

May 2002

This cost study reflects the cost of Operational Support Systems (OSS) related to Line Sharing

A. PURPOSE, SCOPE, AND APPLICATION

The purpose of this study is to determine the Line Sharing Operational Support Systems (OSS) cost that will be incurred by QWEST to provide to OSS for Line Sharing.

B. DESCRIPTION OF SERVICE

The OSS investment and expense dollars are the costs that will be incurred by QWEST to support Line Sharing. Line Sharing is making available the opportunity for the Co-Provider (data Competitive Local Exchange Carrier) to offer Digital Subscriber Line (DSL)-qualified advanced data services within the spectrum of an existing QWEST end user's analog voice-grade service.

C. STUDY METHODOLOGY

The QWEST Wholesale Cost Program was used to convert investments and expenses to 2002 costs by applying the appropriate South Dakota capital and expense factors. The costs displayed do not include any ongoing maintenance costs, product specific advertising expenses, and pre - sales expenses or sales compensation expenses.

The costs of making the opportunity of providing data services over existing QWEST end user lines available include not only QWEST planning, programming, training, and support but also enhancements and modifications to existing operational support systems.

D. STUDY ASSUMPTIONS

1. The study assumes cost recovery of 2002 OSS enhancement and upgrade expenses and investments over a 5-year period beginning in 2002 and ending in 2006.
2. CLEC Line Sharing demand is based on a limited amount of information that QWEST was able to obtain from the data CLECs.
3. In this cost study, QWEST has not used the economic depreciation lives (and/or cost of money) that it advocates. QWEST does not advocate the depreciation lives (and/or cost of money) used in this study, nor does it believe that they are appropriate inputs for its cost studies beyond the scope of this application.
4. Ongoing maintenance expenses associated with these Line Sharing Start Up OSS costs are included in a separate cost study.
5. This study assumes that billing for Line Sharing OSS will appear on the Shared Line bill. The only billing costs included in this cost study are those incurred by Information Technologies to ensure that the separate Line Sharing OSS charge appears on the Shared Line bill.

E. TOTAL ELEMENT LONG RUN INCREMENTAL COST

Qwest performs Total Element Long Run Incremental Cost (TELRIC) studies to estimate the economic cost of providing network elements. The Qwest TELRIC studies identify the forward-looking costs associated with the provision of the total quantity of a network element in the long run. The *forward-looking* Qwest TELRIC studies identify the costs that are likely to be incurred in the future, and consider the latest forward-looking technologies and methods of operation that are currently available. These studies are *not* embedded or historical, and do not measure the impact of prior investment decisions by the corporation. The Qwest TELRIC studies also identify the *long run* costs associated with providing a network element—reflecting a time period over which all inputs (including changes in the size of facilities, levels of investment, etc.) can be adjusted.

The Qwest cost study format disaggregates the cost results, on a unitized basis, into the following components:

Investment-Based Costs and Other Element-Specific Expenses are direct costs. Investment Based Costs are associated with recurring cost elements and include the capital costs (e.g., depreciation, return, taxes) and maintenance costs associated with the investment required for provisioning a network element. Element-specific Expenses are other network element costs such as billing and for non-recurring costs, the labor-related expenses associated with the provision of a network element.

Marketing and Business Fees are direct costs for which Qwest's accounting records typically allow tracking down to a particular product or service group.

Other Direct Costs include network administration and engineering costs and various other administrative costs such as the cost of general-purpose computers and accounting and finance expenses. These costs are not directly associated with a specific network element. However, these costs vary with the provision of all network elements, and are not common to the entire firm.

Total Element Long Run Incremental Costs (TELRIC) represent the sum of all direct costs (e.g., Investment-Based Costs and Other Element-Specific Expenses, Marketing and Business Fees and Other Direct Costs). This measure of costs includes the forward-looking costs incurred in the provision of a network element. This measure of costs is consistent with TELRIC as defined by the FCC.

Common Costs are associated with the enterprise as a whole. These costs do vary based on the total size of the firm, but do not vary with the provisioning of individual network elements. These costs are avoidable only with the elimination of the entire firm, and are sometimes referred to as *general overhead costs.*

Fully Allocated Costs represent the sum of Total Element Long Run Incremental Cost plus Common Costs (TELRIC + CC).

OPERATIONAL SUPPORT SYSTEMS
INTERCONNECTION
LINE SHARING

TABLE OF CONTENTS

Tab		Page
SECTION 1 – Study Output		
	Executive Summary	1
	WINPC3 – Study Summary	3
	WINPC3 Output	4
	Total Product Costs	5
	Investment Cost Calc	6
SECTION 2 – Cost Calculations		
	Inputs	7
	Demand	8
	Investments	9
	Expenses	10
	OSS Line Sharing Invest/Exp	11
	Summary	12
	WINPC3 Investments	13
	WINPC3 Parameters	14
	WINPC3 ACF Inputs	15
	WINPC3 ACF Outputs	17
SECTION 3 – Miscellaneous		
	Study Input Requirements	20
	Read Me	21

OSS LINE SHARING INTERCONNECTION

FILES INCLUDED IN OSS LINE SHARING COST STUDY

All Word Files.doc – This is the Word file that contains:

Executive Summary. Details the purpose of this study, a description of the elements included in this study, the methodology used to complete this study, the assumptions that were used in this study and a complete description of Total Element Long Run Incremental Costs.

Table of Contents for entire study.

Title page for study.

Read Me instructions to recreate study results.

SD OSS Line Sharing.xls – This is the Excel file that contains:

The pages containing the cost calculations for the OSS Line Sharing cost study and the output results from the following models:

Wholesale Cost Program – Version 2.08 The purpose of the Wholesale Cost Program is to develop the Total Element Long Run Incremental Costs of the Investments/Expenses to provide OSS for Line Sharing. The Wholesale Cost Model creates formulas for inflating and loading investments, along with formulas for applying annual cost factors to the investments and/or expenses.

Cost Factor Databases – Vintage 02SD01E (05/29/02)

Cost Factors Model (TELRIC) – Version 02V1 –

To generate the cost results found in this study, do as follows:

Go to the inputs tab in the SD OSS Line Sharing.xls file. Fill in the cells in red. These inputs will flow through to produce the costs found on page 3 of the cost study. (Note: State name must remain the same or the Wholesale Cost Program will have to be rerun.)

Study Name	*LINE SHARING OSS PER LINE*	
Study Requester	*Doug Gollehon*	
Type of Study	*TELRIC*	
Study ID	*6536*	
Cost Factor Group	*Interconnection*	
Study Applications		
Completion Date	*May 30, 2002*	
Cost Analyst	*Nancy Frazee*	
Study Review	**Reviewer**	**Date**
		May 30, 2002
Models Used	**Model**	**Version**
	Model Used	*OSS Line Sharing Tab*
	Wholesale Cost Program	*2.08*
	Cost Factor Databases	*02SD01E*
	Cost Factors Model (TELRIC)	*02V1*
Cost Factors Used	**Factor**	**Effective Date**
	Capital Recovery	*04/02*
	Ad Valorem	*02/02*
	Sales Tax	*01/01*
	Interest During Construction	*01/01*
	COE Land & Bldg	*02/02*
	Marketing Factors	*04/02*
	Other Direct Expenses	*04/02*
	Common	*04/02*
	Cost Of Money	*10.14%*
Inflation		
Major Cost Drivers		

Parameter File: I:\SLHILL-Team\OSS\SD OSS Studies\2002\SD OSS LINE SHARING.xls, Sheet "WINPC3 Parameters"
State(s): SD
Database Vintage: 02SD01E
Factors For: Interconnection
Report Type: ICM Format
Decimal Places: 6
Costs Format: Monthly
Group Totals: Yes
ACF Input: I:\SLHILL-Team\OSS\SD OSS Studies\2002\SD OSS LINE SHARING.xls, Sheet "WINPC3 ACF Inputs"
ACF Output: I:\SLHILL-Team\OSS\SD OSS Studies\2002\SD OSS LINE SHARING.xls, Sheet "WINPC3 ACF Outputs"
Investment: I:\SLHILL-Team\OSS\SD OSS Studies\2002\SD OSS LINE SHARING.xls, Sheet "WINPC3 Investments"
Output: I:\SLHILL-Team\OSS\SD OSS Studies\2002\SD OSS LINE SHARING.xls, Sheet "WINPC3 Output"

State: South Dakota

Description	Loaded Investment	Direct Expense	Invst. Based & Mktg.	Network Support	Other Direct Expenses	TELRIC	Common	TELRIC + Common
LINE SHARING OSS PER LINE	$0.000000	$2.305218	$2.354711	$0.116641	$0.640321	$2.995032	$0.213502	$3.208534

5/30/02 1:58 PM

Row	South Dakota	Source or Calculation	Factor Value	LINE SHARING OSS PER LINE
			A	B
1	**Investment**	sl r"Total" cD		0.000000
2				
3	***Investment Based Costs***	***sl r"Total" cK***		0.000000
4				
5	Direct Expenses			2.305218
6	Miscellaneous Expenses			0.000000
7	Billing & Collection - PL			0.000000
8	***Total Investment Based + Billing & Collection***			2.305218
9				
10	***Marketing & Business Fees***			
11	Product Management Expense	cA*(r8-r6)	0.019957	0.046006
12	Sales Expense			0.000000
13	Product Advertising Expense			0.000000
14	Business Fees (Other Operating Taxes)	cA*(Sum(r8:r13)-r6	0.001483	0.003487
15	***Marketing & Business Fees Total***	***Sum r11:r14***		0.049493
16				
17	***Sub-Total Invst., B & C, Mktg***	***r8 + r15***		2.354711
18				
19	***Other Direct Expenses***			
20	Network Operations	cA*(r17-r6)	0.034832	0.082019
21	Network Support Assets	cA*(r17-r6)	0.014703	0.034622
22	General Support Assets	cA*(r17-r6)	0.088742	0.208962
23	General Purpose Computers	cA*(r17-r6)	0.043342	0.102058
24	Uncollectible	cA*(r17-r6)	0.003786	0.008915
25	Accounting & Finance Expense	cA*(r17-r6)	0.007346	0.017297
26	Human Resources Expense	cA*(r17-r6)	0.008294	0.019529
27	Information Management Expense	cA*(r17-r6)	0.070887	0.166918
28	Intangibles	cA*(r17-r6)	0.000000	0.000000
29	***Total Other Direct Expenses***	***Sum r20:r28***		0.640321
30				
31	***TELRIC***	***r17 + r29***		2.995032
32				
33	***Common***			
34	Executive Expense	cA*(r31-r6)	0.011267	0.033746
35	Planning Expense	cA*(r31-r6)	0.000525	0.001573
36	External Relations Expense	cA*(r31-r6)	0.037846	0.113350
37	Legal Expense	cA*(r31-r6)	0.004717	0.014129
38	Other Procurement Expense	cA*(r31-r6)	0.001860	0.005569
39	Research & Development Expense	cA*(r31-r6)	0.000006	0.000018
40	Other General and Admin Expense	cA*(r31-r6)	0.015064	0.045117
41	***Common Costs***	***Sum r34:r40***		0.213502
42				
43	***TELRIC + Common Costs***	***r31 + r41***		3.208534

5/30/02
South Dakota

LINE SHARING OSS PER LINE

Acct	FRC	Account Name	Investment	Depreciation	Cost Of Money	Income Tax	Ad Valorem	Maintenance	Switch RTU	Total Capital Costs

LINE SHARING OSS PER LINE

		Total	0.000000	0.000000	0.000000	0.000000	0.000000	0.000000	0.000000	0.000000

Service:	**OSS LINE SHARING**
Jurisdiction:	South Dakota
2-character Abbreviation	SD
Product Group:	Interconnect
Cost Year:	2002
Study Date:	May-02

SECTION A

Levelizing and Present Worth Factors

Source: MSEA Website

Discount Rate	10.14%
Levelizing Period (years)	5

SECTION B

Investments

Source: Information Technology Group

Unbundling & Systems Access Capital	2124	$	-

Expenses

Source: Information Technology Group

Unbundling & Systems Access Expenses	Expense	$	870,720.00
Direct Expenses Including Telcordia	Expense	$	11,206,000.00

SECTION C

Demand

Source: Forecasting

2001	35,248
2002	71,081
2003	116,659
2004	170,520
2005	231,422

CONFIDENTIAL

[3]

	A	B	C	D	E	F	G	H	I
1	Investment								
2	STUDY	LINE SHARING OSS PER LINE							
3	DATE	4/3/01							
4	GROUP	LINE SHARING OSS PER LINE						Model Used	Tab
5	COMMON	SD	2.3052179008		0.		LINE SHARING OSS EXPENSES	OSS Line Sharing Tab	Summary

	A	B
1	Parameter	
2	SD	
3	7	
4	6	
5	Monthly	12
6	Yes	
7	No	
8		
9	11	

	A	B	C	D	E	F	G	H	I	J	K	L	M	N	O
1	ACFIN														
2	02SD01E														
3	2124	DEPR-5YR	COM-5YR	IT-5YR	DEPR-AVG	COM-AVG	IT-AVG	ADVAL	SALES	IDC	BLDG	LAND	PRODMAN	BF	NTWKOP

	P	Q	R	S	T	U	V	W	X	Y	Z	AA	AB	AC	AD
1															
2															
3	NTWKST	GENLST	COMPTR	UNCOLL	ACCNT	HREXP	INTAN	EXEC	PLAN	EXTERN	INFOR	LEGAL	PROCR	RDEXP	GENL

	A	B	C	D	E	F	G	H	I	J	K	L	M
1	ACFOUT	Factors For:	Interconnection										
2	*-Run Done With Database Vintage: 02SD01E, Dated: 04/08/02*												
3	*-Wholesale Cost Program (TELRIC) Data Base released 04/02 (02SD01E).*												
4	*-Factors loaded from Factors Model (Expense Module), Version 02V1.*												
5	*-CAPITAL RECOVERY factors released 04/02 and based on 10.14% Cost*												
6	*Of Money. No 1-10 year factors developed.*												
7	*-MAINTENANCE factors released 02/02.*												
8	*-RTU factors released 02/01.*												
9	*-AD VALOREM Tax released 02/02.*												
10	*-DIRECTLY ASSIGNED expense factors released 04/02.*												
11	*-BUSINESS FEES released 04/02.*												
12	*-COMMON Expense released 04/02.*												
13	*-TOTAL INSTALLED FACTORS (TIF) released 01/01.*												
14	*-POWER investment factors released 01/01.*												
15	*-SALES TAX released 01/01.*												
16	*-TELCO Engineering factors released 01/01.*												
17	*-INTEREST DURING CONSTRUCTION released 01/01.*												
18	*-LAND AND BUILDING factors released 02/02.*												
19	*-DIRECTLY ATTRIBUTABLE expense factors released 04/02.*												
20	*-SALES EXPENSE factor released 04/02.*												
21	*-PRODUCT MANAGEMENT factor released 04/02.*												
22	*-BILLING & COLLECTION factor released 01/01.*												
23	*-PROVISIONING factors released 01/01.*												
24	*-TELEPHONE PLANT INDEX released 01/01.*												
25	*-STRUCTURE RATIO released 01/01.*												
26													
27													
28													
29													
30													
31													
32	*State:*												
33													

	A	B	C	D	E	F	G	H	I	J	K	L	M	N	O
34	***ACCOUNTS***														
35	***20C***														
36	***110C***														
37															
38	State:	South Dakota													
39															
40	**ACCOUNTS**	**DEPR-5YR**	**COM-5YR**	**IT-5YR**	**DEPR-AVG**	**COM-AVG**	**IT-AVG**	**ECONLIFE**	**ADVAL**	**SALES**	**IDC**	**BLDG**	**LAND**	**PRODMAN**	**BF**
41	2124	0.000000	0.000000	0.000000	0.164850	0.047620	0.018008	0.230478	0.009546	0.056400	0.006100	0.000000	0.000000	0.019957	0.001483

	P	Q	R	S	T	U	V	W	X	Y	Z	AA	AB	AC	AD	AE
34																
35																
36																
37																
38																
39																
40	NTWKOP	NTWKST	GENLST	COMPTR	UNCOLL	ACCNT	HREXP	INTAN	EXEC	PLAN	EXTERN	INFOR	LEGAL	PROCR	RDEXP	GENL
41	0.034832	0.014703	0.088742	0.043342	0.003786	0.007346	0.008294	0.000000	0.011267	0.000525	0.037846	0.070887	0.004717	0.001860	0.000006	0.015064

QWEST

ACCESS TO OPERATIONAL SUPPORT SYSTEMS FOR INTERCONNECTION - Ongoing Maintenance

Cost Study #: 6549

SOUTH DAKOTA

JUNE 2002

This cost study identifies the Operational Support Systems (OSS) Ongoing Maintenance cost per service order. The final TELRIC cost estimates include attributed costs and common costs.

OPERATIONAL SUPPORT SYSTEMS
INTERCONNECTION
ONGOING MAINTENANCE

TABLE OF CONTENTS

Page

SECTION 1 – Study Output

Executive Summary 1

Study Summary 3

Cost Summary 4

Total Product Costs 5

Investment Cost Calculations 6

SECTION 2 – Cost Calculations

Inputs 7

Demand 8

Expense 9

Calculation Summary 10

WINPC3 Investments 11

WINPC3 Parameters 12

WINPC3 ACF Inputs 13

WINPC3 ACF Outputs 16

SECTION 3 – Miscellaneous

Study Input Requirements 20

A. PURPOSE, SCOPE, AND APPLICATION

The purpose of this study is to determine the costs that will be incurred by QWEST to provide ongoing maintenance of interfaces used by the CLECs for interconnection.

The costs calculated in this study can be used for developing pricing for customer requested items.

B. DESCRIPTION OF SERVICE

Ongoing maintenance is the cost of maintaining the electronic interfaces for interconnection. These interfaces provide electronic means for state certified resellers and Competitive Local Exchange Carriers (CLECs) to access QWEST Operational Support Systems (OSS) for the purpose of providing equivalent end-user service as is provided by QWEST.

C. STUDY METHODOLOGY

The Wholesale Cost Program was used to convert expenses to 2000 costs by applying the appropriate South Dakota expense factors.

QWEST will incur ongoing maintenance costs associated with the electronic interfaces. Examples of these expenses include salaries, travel and training expenses for people involved in making table updates, resolving error conditions, starting up the application software and other maintenance-and-operations-related tasks associated solely with systems access.

Forecasted total QWEST maintenance expenses for 2001 through 2010 were used to determine cost. The costs displayed do not include any product specific advertising costs, pre-sales expenses, sales compensation expenses, expensed right to use fees or ad valorem taxes. The costs displayed also do not include enhancement and development investments and expenses.

D. STUDY ASSUMPTIONS

Expenses for the years 2001-2010 are assumed to be equal to actual expense for 1999.

This study assumes CLEC demand for completed service orders based on actual service orders generated as a result of Local Service Requests, estimates of service orders generated as a result of Access Service Requests, migration estimates of existing CLEC Resale lines and QWEST Retail lines to UNE C, and line sharing. Total completed service orders for 2001 through 2010 are extrapolated with a linear trend using EXCEL from the 1999 actual service orders generated and forecasts of 2000 and 2001 service order demand.

In this cost study, QWEST has not used the economic depreciation lives (and/or cost of money) that it advocates. QWEST does not advocate the depreciation lives (and/or cost of money) used in this study, nor does it believe that they are appropriate inputs for its cost studies beyond the scope of this application.

TOTAL ELEMENT LONG RUN INCREMENTAL COST

Qwest performs Total Element Long Run Incremental Cost (TELRIC) studies to estimate the economic cost of providing network elements. The Qwest TELRIC studies identify the forward-looking costs associated with the provision of the total quantity of a network element in the long run. The *forward-looking* Qwest TELRIC studies identify the costs that are likely to be incurred in the future, and consider the latest forward-looking technologies and methods of operation that are currently available. These studies are *not* embedded or historical, and do not measure the impact of prior investment decisions by the corporation. The Qwest TELRIC studies also identify the *long run* costs associated with providing a network element—reflecting a time period over which all inputs (including changes in the size of facilities, levels of investment, etc.) can be adjusted.

The Qwest cost study format disaggregates the cost results, on a unitized basis, into the following components:

Investment-Based Costs and Other Element-Specific Expenses are direct costs. Investment Based Costs are associated with recurring cost elements and include the capital costs (e.g., depreciation, return, taxes) and maintenance costs associated with the investment required for provisioning a network element. Element-specific Expenses are other network element costs such as billing and for non-recurring costs, the labor-related expenses associated with the provision of a network element.

Marketing and Business Fees are direct costs for which Qwest's accounting records typically allow tracking down to a particular product or service group.

Other Direct Costs include network administration and engineering costs and various other administrative costs such as the cost of general-purpose computers and accounting and finance expenses. These costs are not directly associated with a specific network element. However, these costs vary with the provision of all network elements, and are not common to the entire firm.

Total Element Long Run Incremental Costs (TELRIC) represent the sum of all direct costs (e.g., Investment-Based Costs and Other Element-Specific Expenses, Marketing and Business Fees and Other Direct Costs). This measure of costs includes the forward-looking costs incurred in the provision of a network element. This measure of costs is consistent with TELRIC as defined by the FCC.

Common Costs are associated with the enterprise as a whole. These costs do vary based on the total size of the firm, but do not vary with the provisioning of individual network elements. These costs are avoidable only with the elimination of the entire firm, and are sometimes referred to as *general overhead costs.*

Fully Allocated Costs represent the sum of Total Element Long Run Incremental Cost plus Common Costs (TELRIC + CC).

Study Name	*OSS Ongoing Maintenance*	
Study Requester		
Type of Study	*TELRIC*	
Study ID	*6549*	
Cost Factor Group	*Interconnection*	
Study Applications		
Completion Date	*June 13, 2002*	
Cost Analyst	*Nancy Frazee*	
Study Review	**Reviewer**	**Date**
		June 13, 2002
Models Used	**Model**	**Version**
	Model Used	*NA*
	Wholesale Cost Program	*2.08*
	Cost Factor Databases	*02SD01E*
	Cost Factors Model (TELRIC)	*02V1*
Cost Factors Used	**Factor**	**Effective Date**
	Capital Recovery	*04/02*
	Maintenance	*02/02*
	Ad Valorem	*02/02*
	Power	*01/01*
	Sales Tax	*01/01*
	Interest During Construction	*01/01*
	COE Land & Bldg	*02/02*
	Telco	*01/01*
	Marketing Factors	*04/02*
	Other Direct Expenses	*04/02*
	Common	*04/02*
	Cost Of Money	*10.14%*
Inflation		
Major Cost Drivers		

Parameter File: I:\SLHILL-Team\OSS\SD OSS Studies\2002\SD OSS ONGOING MAINTENANC.xls, Sheet "WINPC3 Parameters"
State(s): SD
Database Vintage: 02SD01E
Factors For: Interconnection
Report Type: ICM Format
Decimal Places: 8
Costs Format: Monthly
Group Totals: Yes
ACF Input: I:\SLHILL-Team\OSS\SD OSS Studies\2002\SD OSS ONGOING MAINTENANC.xls, Sheet "WINPC3 ACF Inputs"
ACF Output: I:\SLHILL-Team\OSS\SD OSS Studies\2002\SD OSS ONGOING MAINTENANC.xls, Sheet "WINPC3 ACF Outputs"
Investment: I:\SLHILL-Team\OSS\SD OSS Studies\2002\SD OSS ONGOING MAINTENANC.xls, Sheet "WINPC3 Investments"
Output: I:\SLHILL-Team\OSS\SD OSS Studies\2002\SD OSS ONGOING MAINTENANC.xls, Sheet "WINPC3 Output"

State: South Dakota

Description	Loaded Investment	Direct Expense	Invst. Based & Mktg.	Network Support	Other Direct Expenses	TELRIC	Common	TELRIC + Common
Summary per OSS Service Order	$0.00000000	$1.00326281	$1.02480279	$0.05076390	$0.27867654	$1.30347933	$0.09291920	$1.39639853

6/13/02 [illegible]9 AM

Row	South Dakota	Source or Calculation	Factor Value	Summary per OSS Service Order
			A	B
1	**Investment**	sl r"Total" cD		0.00000000
2				
3	***Investment Based Costs***	***sl r"Total" cK***		0.00000000
4				
5	Direct Expenses			1.00326281
6	Miscellaneous Expenses			0.00000000
7	Billing & Collection - PL			0.00000000
8	***Total Investment Based + Billing & Collection***			1.00326281
9				
10	***Marketing & Business Fees***			
11	Product Management Expense	cA*(r8-r6)	0.019957	0.02002233
12	Sales Expense	cA*(r8-r6)	0.000000	0.00000000
13	Product Advertising Expense			0.00000000
14	Business Fees (Other Operating Taxes)	cA*(Sum(r8:r13)-r6	0.001483	0.00151765
15	***Marketing & Business Fees Total***	***Sum r11:r14***		0.02153998
16				
17	***Sub-Total Invst., B & C, Mktg***	***r8 + r15***		1.02480279
18				
19	***Other Direct Expenses***			
20	Network Operations	cA*(r17-r6)	0.034832	0.03569574
21	Network Support Assets	cA*(r17-r6)	0.014703	0.01506816
22	General Support Assets	cA*(r17-r6)	0.088742	0.09094321
23	General Purpose Computers	cA*(r17-r6)	0.043342	0.04441714
24	Uncollectible	cA*(r17-r6)	0.003786	0.00387985
25	Accounting & Finance Expense	cA*(r17-r6)	0.007346	0.00752797
26	Human Resources Expense	cA*(r17-r6)	0.008294	0.00849939
27	Information Management Expense	cA*(r17-r6)	0.070887	0.07264508
28	Intangibles	cA*(r17-r6)	0.000000	0.00000000
29	***Total Other Direct Expenses***	***Sum r20:r28***		0.27867654
30				
31	***TELRIC***	***r17 + r29***		1.30347933
32				
33	***Common***			
34	Executive Expense	cA*(r31-r6)	0.011267	0.01468693
35	Planning Expense	cA*(r31-r6)	0.000525	0.00068477
36	External Relations Expense	cA*(r31-r6)	0.037846	0.04933161
37	Legal Expense	cA*(r31-r6)	0.004717	0.00614901
38	Other Procurement Expense	cA*(r31-r6)	0.001860	0.00242384
39	Research & Development Expense	cA*(r31-r6)	0.000006	0.00000766
40	Other General and Admin Expense	cA*(r31-r6)	0.015064	0.01963538
41	***Common Costs***	***Sum r34:r40***		0.09291920
42				
43	***TELRIC + Common Costs***	***r31 + r41***		1.39639853

6/13/02
South Dakota

OSS Ongoing Maintenance

Acct	FRC	Account Name	Investment	Depreciation	Cost Of Money	Income Tax	Ad Valorem	Maintenance	Switch RTU	Total Capital Costs

Summary per OSS Service Order

Total	0.00000000	0.00000000	0.00000000	0.00000000	0.00000000	0.00000000	0.00000000	0.00000000

Service:	**OSS ONGOING MAINTENANCE**
Jurisdiction:	South Dakota
2-character Abbreviation	SD
Product Group:	Interconnect
Cost Year:	2002
Study Date:	Jun-02

SECTION A

Levelizing and Present Worth Factors

Source: MSEA Website

Discount Rate	10.14%
Levelizing Period (years)	10

SECTION B

Expenses

Source: Information Technology Group

Maintenance & Operations - 2001	Expense	$	4,700,000.00
Maintenance & Operations - 2002	Expense	$	4,700,000.00
Maintenance & Operations - 2003	Expense	$	4,700,000.00
Maintenance & Operations - 2004	Expense	$	4,700,000.00
Maintenance & Operations - 2005	Expense	$	4,700,000.00
Maintenance & Operations - 2006	Expense	$	4,700,000.00
Maintenance & Operations - 2007	Expense	$	4,700,000.00
Maintenance & Operations - 2008	Expense	$	4,700,000.00
Maintenance & Operations - 2009	Expense	$	4,700,000.00
Maintenance & Operations - 2010	Expense	$	4,700,000.00

SECTION C

Demand

Source: Forecasting

2000	4,470,971
2001	3,735,714
2002	3,792,140
2003	3,931,606
2004	4,161,226
2005	4,471,838
2006	4,790,713
2007	5,238,836
2008	5,806,350
2009	6,494,747
2010	7,390,753

OSS ONGOING MAINTENANCE

South Dakota

Demand

Demand

1.	Forecasted Demand	*Inputs Tab, Sec C*	
	a. 2001		3,735,714
	b. 2002		3,792,140
	c. 2003		3,931,606
	d. 2004		4,161,226
	e. 2005		4,471,838
	f. 2006		4,790,713
	g. 2007		5,238,836
	h. 2008		5,806,350
	I. 2009		6,494,747
	j. 2010		7,390,753
2.	Total Demand		49,813,923
3.	Total Net Present Value of Demand	*NPV of Line 1a:j*	**28,613,232**
	using:		
	Discount Rate	*Inputs Tab, Sec A*	10.14%
	Levelizing Period (years)	*Inputs Tab, Sec A*	10

OSS ONGOING MAINTENANCE

South Dakota

Expense

Expense

1.	Forecasted Demand	*Inputs Tab, Sec B*		
	a. Maintenance & Operations - 2001		$	4,700,000.00
	b. Maintenance & Operations - 2002		$	4,700,000.00
	c. Maintenance & Operations - 2003		$	4,700,000.00
	d. Maintenance & Operations - 2004		$	4,700,000.00
	e. Maintenance & Operations - 2005		$	4,700,000.00
	f. Maintenance & Operations - 2006		$	4,700,000.00
	g. Maintenance & Operations - 2007		$	4,700,000.00
	h. Maintenance & Operations - 2008		$	4,700,000.00
	I. Maintenance & Operations - 2009		$	4,700,000.00
	j. Maintenance & Operations - 2010		$	4,700,000.00
2.	Total Expense	*NPV of Line 1a:j*	$	47,000,000.00
3.	Total Net Present Value of Expense	*A/P of Line 2*		$28,706,591.91
	using:			
	Discount Rate	*Inputs Tab, Sec A*		10.14%
	Levelizing Period (years)	*Inputs Tab, Sec A*		10
4.	Total Net Present Value of Demand	*Demand Tab, Ln 3*		28,613,232
5.	Expense per Order	*Ln3 / Ln4*	$	1.00

OSS ONGOING MAINTENANCE

South Dakota

Summary

Annual Expense per Line
A
from: *Expenses Tab, Ln 5*

Summary per OSS Service Order

Expense	$	1.00

	A	B	C	D	E	F	G	H	I
1	Investment								
2	STUDY	OSS Ongoing Maintenance							
3	DATE	6/26/02 17:30							
4	PRODUCT	TELRIC							
5	GROUP	Summary per OSS Service Order						Model Used	Tab
6	COMMON	SD	1.0032628074	0.	0.		OSS EXPENSES - ONGOING MAINTENANCE	NA	Summary
7	GROUP								

	A	B
1	Parameter	
2	SD	
3	7	
4	8	
5	Monthly	12
6	Yes	
7	No	
8		
9	11	
10	6549	

	A	B	C	D	E	F	G	H	I	J	K	L	M
1	ACFIN												
2	02SD01E												
3	377C	DEPR-AVG	COM-AVG	IT-AVG	MTNC-TOT	RTU-SWIT	ADVAL	POWER	SALES	TELCO	IDC	BLDG	LAND
4	20C	DEPR-AVG	COM-AVG	IT-AVG	MTNC-TOT	RTU-SWIT	ADVAL	POWER	SALES	TELCO	IDC	BLDG	LAND
5	110C	DEPR-AVG	COM-AVG	IT-AVG	MTNC-TOT	RTU-SWIT	ADVAL	POWER	SALES	TELCO	IDC	BLDG	LAND

	N	O	P	Q	R	S	T	U	V	W	X	Y	Z
1													
2													
3	PRODMAN	BF	NTWKOP	NTWKST	GENLST	COMPTR	UNCOLL	ACCNT	HREXP	INTAN	EXEC	PLAN	EXTERN
4	PRODMAN	SALESEXP	BF	NTWKOP	NTWKST	GENLST	COMPTR	UNCOLL	ACCNT	HREXP	INTAN	EXEC	PLAN
5	PRODMAN	SALESEXP	BF	NTWKOP	NTWKST	GENLST	COMPTR	UNCOLL	ACCNT	HREXP	INTAN	EXEC	PLAN

	AA	AB	AC	AD	AE	AF
1						
2						
3	INFOR	LEGAL	PROCR	RDEXP	GENL	
4	EXTERN	INFOR	LEGAL	PROCR	RDEXP	GENL
5	EXTERN	INFOR	LEGAL	PROCR	RDEXP	GENL

	A	B	C	D	E	F	G	H	I	J	K	L	M
1	ACFOUT	Factors For:	Interconnection										
2	*-Run Done With Database Vintage: 02SD01E, Dated: 04/08/02*												
3	*-Wholesale Cost Program (TELRIC) Data Base released 04/02 (02SD01E).*												
4	*-Factors loaded from Factors Model (Expense Module), Version 02V1.*												
5	*-CAPITAL RECOVERY factors released 04/02 and based on 10.14% Cost*												
6	*Of Money. No 1-10 year factors developed.*												
7	*-MAINTENANCE factors released 02/02.*												
8	*-RTU factors released 02/01.*												
9	*-AD VALOREM Tax released 02/02.*												
10	*-DIRECTLY ASSIGNED expense factors released 04/02.*												
11	*-BUSINESS FEES released 04/02.*												
12	*-COMMON Expense released 04/02.*												
13	*-TOTAL INSTALLED FACTORS (TIF) released 01/01.*												
14	*-POWER investment factors released 01/01.*												
15	*-SALES TAX released 01/01.*												
16	*-TELCO Engineering factors released 01/01.*												
17	*-INTEREST DURING CONSTRUCTION released 01/01.*												
18	*-LAND AND BUILDING factors released 02/02.*												
19	*-DIRECTLY ATTRIBUTABLE expense factors released 04/02.*												
20	*-SALES EXPENSE factor released 04/02.*												
21	*-PRODUCT MANAGEMENT factor released 04/02.*												
22	*-BILLING & COLLECTION factor released 01/01.*												
23	*-PROVISIONING factors released 01/01.*												
24	*-TELEPHONE PLANT INDEX released 01/01.*												
25	*-STRUCTURE RATIO released 01/01.*												
26													
27													
28													
29													
30													
31	*State:*												
32													
33	*ACCOUNTS*												

	A	B	C	D	E	F	G	H	I	J	K	L	M	N	O
34	***20C***														
35	***2116***														
36	***110C***														
37															
38	State:	South Dakota													
39															
40	**ACCOUNTS**	**DEPR-AVG**	**COM-AVG**	**IT-AVG**	**MTNC-TOT**	**RTU-SWIT**	**ADVAL**	**POWER**	**SALES**	**TELCO**	**IDC**	**BLDG**	**LAND**	**PRODMAN**	**SALESEXP**
41	377C	0.108910	0.045445	0.017186	0.010018	0.000000	0.009546	0.069700	0.056400	0.110500	0.006100	0.199833	0.003732	0.019957	0.000000
42	20C	0.000000	0.096506	0.036495	0.012770	0.000000	0.009546	0.000000	0.056400	0.000000	0.000000	0.000000	0.000000	0.019957	0.011877
43	110C	0.025821	0.074869	0.028313	0.012770	0.000000	0.009546	0.000000	0.056400	0.000000	0.006100	0.000000	0.000000	0.019957	0.011877

	P	Q	R	S	T	U	V	W	X	Y	Z	AA	AB	AC	AD	AE
34																
35																
36																
37																
38																
39																
40	**BF**	**NTWKOP**	**NTWKST**	**GENLST**	**COMPTR**	**UNCOLL**	**ACCNT**	**HREXP**	**INTAN**	**EXEC**	**PLAN**	**EXTERN**	**INFOR**	**LEGAL**	**PROCR**	**RDEXP**
41	0.001483	0.034832	0.014703	0.088742	0.043342	0.003786	0.007346	0.008294	0.000000	0.011267	0.000525	0.037846	0.070887	0.004717	0.001860	0.000006
42	0.001483	0.034832	0.014703	0.088742	0.043342	0.003786	0.007346	0.008294	0.000000	0.011267	0.000525	0.037846	0.070887	0.004717	0.001860	0.000006
43	0.001483	0.034832	0.014703	0.088742	0.043342	0.003786	0.007346	0.008294	0.000000	0.011267	0.000525	0.037846	0.070887	0.004717	0.001860	0.000006

	AF
34	
35	
36	
37	
38	
39	
40	**GENL**
41	0.015064
42	0.015064
43	0.015064

EFFECTIVE DATE: June, 10, 2002	SD			
TYPE of STUDY	TSLRIC		TELRIC	
Place a "X" were appropriate; Under Economic place a "X or ?" ? =	Economic	Commission	Economic	Commission
Retail				
Rate/Price Case	?	X		
Individual Rate Filings		X		
Filing Requirements				
Wholesale				
Cost Docket			?	X
Individual Rate Filings				X
Filing Requirements				
Inputs				
Depreciation (Economic, Prescribed, Ordered)	Economic	Prescribed-STATE	Economic	Prescribed-STATE
Deaverage (Yes)				
State Specific Adjustments (Yes)				
Composite Cost of Money Percentage	10.89%	10.14%	10.89%	10.14%
PRETAX Discount Rate	15.86%	13.98%	15.86%	13.98%
Major Models				
Current - see Section 3 for current model releases				
WINPC3 Factor Vintage	Current	02SD01S	Current	02SD01E
NRC Factor Vintage	Current	02SD01S	Current	02SD01E
SCM - Switching Feature Module	Current	Current	Current	Current
SUM - Switching Usage Module	Current	Current	Current	Current
Loop - RLCAP / LoopMod	Current	Current	Current	Current
NAC	Current	Current	Current	Current
Transport	Current	Current	Current	Current
CM				1.0
ICM				2.2

NOTES

GENERAL NOTES

EXECUTIVE SUMMARY

QWEST

ACCESS TO OPERATIONAL SUPPORT SYSTEMS FOR INTERCONNECTION - Development & Enhancements

2002 COST STUDY

JUNE 2002

Cost Study #6550

OPERATIONAL SUPPORT SYSTEMS INTERCONNECTION DEVELOPMENT & ENHANCEMENTS

TABLE OF CONTENTS

Page

SECTION 1 – Study Output

Executive Summary	1
Study Summary	4
Study Results	5
Total Product Costs	6
Investment Cost Calculation	7

SECTION 2 – Cost Calculations

Inputs	8
Demand	11
Investment – Planning Dollars Allocation	12
Expense – Planning Dollars Allocation	13
Calculation Summary	14
WINPC3 Investments	15
WINPC3 Parameters	16
WINPC3 ACF Inputs	17
WINPC3 ACF Outputs	19

A. PURPOSE, SCOPE, AND APPLICATION

The purpose of this study is to determine Operational Support Systems (OSS) development and enhancement (Start Up) capital and expense dollars that will be incurred by QWEST to provide access to OSS for interconnection.

The costs calculated in this study can be used for developing pricing for customer requested items.

B. DESCRIPTION OF SERVICE

The OSS development and enhancement capital and expense dollars are the start up costs that will be incurred by QWEST to provide access to OSS for interconnection.

C. STUDY METHODOLOGY

The QWEST Windows Personal Computer Cost Calculator (WINPC3) was used to convert capital investments and expenses to 2000 costs by applying the appropriate South Dakota capital and expense factors. The costs displayed do not include any ongoing maintenance costs[1], product specific advertising expenses, and pre - sales expenses or sales compensation expenses. Total actual investments and expenses for 2000 were used to determine cost.

The costs of providing access to OSS include not only the development of electronic interfaces but also the enhancement of existing operational support systems. Investments and expenses have been identified for the tasks summarized in each of the following categories. Please note that the Resale amounts have been excluded.

Unbundling - Unbundling allows a CLEC to obtain facilities from QWEST at an unbundled rate. Unbundled network elements include the unbundled loop, local switching, transport elements and line ports. Capacity must be expanded to handle the additional data that identifies the unbundled elements and their features and to allow for their ordering, provisioning, repair and billing. Additionally, various tasks must be completed on systems. Such systems and tasks include adding Universal Service Order Codes and Master Customer Numbers, and associated edits to RSOLAR/SOLAR/SOPAD and SONAR and adding the ability to test unbundled loops to MLT.

Local Interconnect Services (LIS) - LIS trunks are the interoffice facilities supporting interconnection traffic. Capacity must be increased for TIRKS and WFA. For example, additional capacity is needed to support new data identifying traffic by a CLEC. Additionally, various tasks must be completed on systems. An example of these tasks is updating the routing tables in the repair systems so that those systems recognize the unique codes identifying each CLEC.

Collocation - Collocation permits a CLEC's equipment to reside in leased space

within a QWEST central office. Specific examples of systems work include modifying the billing systems and the service order processors to mechanize the billing for collocation.

Systems Access - This term is used to describe the work and functions involved in the human-to-computer and computer-to-computer interfaces. These interfaces

[1] Ongoing Maintenance expenses are included in a separate cost study.

allow a CLEC to access QWEST's OSS to perform pre-ordering, ordering, provisioning, maintenance and repair, and billing functions. All of the software development tasks are included here. Examples include defining functional requirements, producing design specifications, coding modules, developing and executing test scripts, planning and building releases, and moving application code into production environments.

UNE Remand – The Unbundled Network Element (UNE) Remand projects are those involved in modifying the OSS to allow the new or revised UNEs to be handled as individual products. Capacity in various OSS had to be expanded to handle the additional data that identify UNEs and their features and to allow for their ordering, provisioning, repair and billing, as QWEST does not provides UNEs to itself.

D. STUDY ASSUMPTIONS

1. The study assumes cost recovery of 2000 development and enhancement investments and expenses over a 6-year period beginning in 2001 and ending in 2006.

2. This study assumes CLEC demand for completed service orders based on actual service orders generated as a result of Local Service Requests, estimates of service orders generated as a result of Access Service Requests, migration estimates of existing CLEC Resale lines and QWEST Retail lines to UNE C, and line sharing. Total completed service orders for 2001 through 2006 are extrapolated with a linear trend using EXCEL from the 1999 actual service orders generated and forecasts of 2000 and 2001 service order demand.

3. Estimated expenses associated with the expense factors used to calculate costs have been removed from the cost study inputs for 2000.

4. QWEST has not used economic depreciation lives (and/or cost of money) in this cost study. QWEST does not advocate these depreciation lives (and/or cost of money), nor does it believe that these are appropriate inputs for its cost studies beyond the scope of this application.

E. TOTAL ELEMENT LONG RUN INCREMENTAL COST

Qwest performs Total Element Long Run Incremental Cost (TELRIC) studies to estimate the economic cost of providing network elements. The Qwest TELRIC studies identify

the forward-looking costs associated with the provision of the total quantity of a network element in the long run. The *forward-looking* Qwest TELRIC studies identify the costs that are likely to be incurred in the future, and consider the latest forward-looking technologies and methods of operation that are currently available. These studies are *not* embedded or historical, and do not measure the impact of prior investment decisions by the corporation. The Qwest TELRIC studies also identify the *long run* costs associated

with providing a network element—reflecting a time period over which all inputs (including changes in the size of facilities, levels of investment, etc.) can be adjusted.

The Qwest cost study format disaggregates the cost results, on a unitized basis, into the following components:

Investment-Based Costs and Other Element-Specific Expenses are direct costs. Investment Based Costs are associated with recurring cost elements and include the capital costs (e.g., depreciation, return, taxes) and maintenance costs associated with the investment required for provisioning a network element. Element-specific Expenses are other network element costs such as billing and for non-recurring costs, the labor-related expenses associated with the provision of a network element.

Marketing and Business Fees are direct costs for which Qwest's accounting records typically allow tracking down to a particular product or service group.

Other Direct Costs include network administration and engineering costs and various other administrative costs such as the cost of general-purpose computers and accounting and finance expenses. These costs are not directly associated with a specific network element. However, these costs vary with the provision of all network elements, and are not common to the entire firm.

Total Element Long Run Incremental Costs (TELRIC) represent the sum of all direct costs (e.g., Investment-Based Costs and Other Element-Specific Expenses, Marketing and Business Fees and Other Direct Costs). This measure of costs includes the forward-looking costs incurred in the provision of a network element. This measure of costs is consistent with TELRIC as defined by the FCC.

Common Costs are associated with the enterprise as a whole. These costs do vary based on the total size of the firm, but do not vary with the provisioning of individual network elements. These costs are avoidable only with the elimination of the entire firm, and are sometimes referred to as *general overhead costs.*

Fully Allocated Costs represent the sum of Total Element Long Run Incremental Cost plus Common Costs (TELRIC + CC).

Study Name	*OSS Development and Enhancements*	
Study Requester		
Type of Study	*TELRIC*	
Study ID	*6550*	
Cost Factor Group	*Interconnection*	
Study Applications		
Completion Date	*June 13, 2002*	
Cost Analyst	*Nancy Frazee*	
Study Review	**Reviewer**	**Date**
		June 13, 2002
Models Used	**Model**	**Version**
	Wholesale Cost Program	*2.08*
	Cost Factor Databases	*02SD01E*
	Cost Factors Model (TELRIC)	*02V1*
Cost Factors Used	**Factor**	**Effective Date**
	Capital Recovery	*04/02*
	Ad Valorem	*02/02*
	Marketing Factors	*04/02*
	Other Direct Expenses	*04/02*
	Common	*04/02*
	Cost Of Money	*10.14%*
Inflation		
Major Cost Drivers		

Parameter File: I:\SLHILL-Team\OSS\SD OSS Studies\2002\SD OSS START UP.xls, Sheet "WINPC3 Parameters"
State(s): SD
Database Vintage: 02SD01E
Factors For: Interconnection
Report Type: ICM Format
Decimal Places: 2
Costs Format: Annual
Group Totals: Yes
ACF Input: I:\SLHILL-Team\OSS\SD OSS Studies\2002\SD OSS START UP.xls, Sheet "WINPC3 ACF Inputs"
ACF Output: I:\SLHILL-Team\OSS\SD OSS Studies\2002\SD OSS START UP.xls, Sheet "WINPC3 ACF Outputs"
Investment: I:\SLHILL-Team\OSS\SD OSS Studies\2002\SD OSS START UP.xls, Sheet "WINPC3 Investments"
Output: I:\SLHILL-Team\OSS\SD OSS Studies\2002\SD OSS START UP.xls, Sheet "WINPC3 Output"

State: South Dakota

Description	Loaded Investment	Factor	Direct Expense	Invst. Based & Mktg.	Network Support	Other Direct Expenses	TELRIC	Common	TELRIC + Common
OSS Development and Enhancements - per Order	$0.71	N/A	$9.81	$10.19	$0.51	$2.77	$12.97	$0.92	$13.89

	6/13/02 [illegible]:29 AM			
Row	South Dakota	Source or Calculation	Factor Value	Development and Enhancements - per Order
			A	B
1	**Investment**	sl r"Total" cD		0.71
2				
3	***Investment Based Costs***	***sl r"Total" cK***		0.17
4				
5	Direct Expenses			9.81
6	Miscellaneous Expenses			0.00
7	Billing & Collection - PL			0.00
8	***Total Investment Based + Billing & Collection***			9.98
9				
10	***Marketing & Business Fees***			
11	Product Management Expense	cA*(r8-r6)	0.019957	0.20
12	Sales Expense			0.00
13	Product Advertising Expense			0.00
14	Business Fees (Other Operating Taxes)	cA*(Sum(r8:r13)-r6	0.001483	0.02
15	***Marketing & Business Fees Total***	***Sum r11:r14***		0.21
16				
17	***Sub-Total Invst., B & C, Mktg***	***r8 + r15***		10.19
18				
19	***Other Direct Expenses***			
20	Network Operations	cA*(r17-r6)	0.034832	0.36
21	Network Support Assets	cA*(r17-r6)	0.014703	0.15
22	General Support Assets	cA*(r17-r6)	0.088742	0.90
23	General Purpose Computers	cA*(r17-r6)	0.043342	0.44
24	Uncollectible	cA*(r17-r6)	0.003786	0.04
25	Accounting & Finance Expense	cA*(r17-r6)	0.007346	0.07
26	Human Resources Expense	cA*(r17-r6)	0.008294	0.08
27	Information Management Expense	cA*(r17-r6)	0.070887	0.72
28	Intangibles	cA*(r17-r6)	0.000000	0.00
29	***Total Other Direct Expenses***	***Sum r20:r28***		2.77
30				
31	***TELRIC***	***r17 + r29***		12.97
32				
33	***Common***			
34	Executive Expense	cA*(r31-r6)	0.011267	0.15
35	Planning Expense	cA*(r31-r6)	0.000525	0.01
36	External Relations Expense	cA*(r31-r6)	0.037846	0.49
37	Legal Expense	cA*(r31-r6)	0.004717	0.06
38	Other Procurement Expense	cA*(r31-r6)	0.001860	0.02
39	Research & Development Expense	cA*(r31-r6)	0.000006	0.00
40	Other General and Admin Expense	cA*(r31-r6)	0.015064	0.20
41	***Common Costs***	***Sum r34:r40***		0.92
42				
43	***TELRIC + Common Costs***	***r31 + r41***		13.89

6/13/02
South Dakota

OSS Development and Enhancements

Acct	FRC	Account Name	Investment	Depreciation	Cost Of Money	Income Tax	Ad Valorem	Maintenance	Switch RTU	Total Capital Costs
OSS Development and Enhancements - per Order										
2124	2124	General Purpose Computers	0.71	0.12	0.03	0.01	0.01	0.00	0.00	0.17
		Total	**0.71**	**0.12**	**0.03**	**0.01**	**0.01**	**0.00**	**0.00**	**0.17**

Service:	**OSS ENHANCEMENTS & DEVELOPMENT**
Jurisdiction:	South Dakota
2-character Abbreviation	SD
Product Group:	Interconnect
Cost Year:	2002
Study Date:	Jun-02

SECTION A

Levelizing and Present Worth Factors

Source: MSEA Website

Discount Rate	10.14%
Period (years)	10

SECTION B

Investments

Source: Information Technology Group

1997				
Planning	2124	$	207,800.00	Section 3, Pg
Resale	2124	$	138,000.00	
UNE	2124	$	2,500.00	
LIS	2124	$	934,800.00	
Collocation	2124	$	-	
Systems Administration	2124	$	3,085,100.00	
Cross Project	2124	$	-	
1998				
Planning	2124	$	23,153.39	Section 3, Pg
Resale	2124	$	12,529.83	
UNE	2124	$	45,368.86	
LIS	2124	$	-	
Collocation	2124	$	-	
Systems Administration	2124	$	2,677,349.90	
Cross Project	2124	$	1,472,194.40	
		$	4,230,596.38	
1999				
Planning	2124	$	68,853.00	Section 3, Pg
Resale	2124	$	420,231.00	
UNE	2124	$	2,711.00	
Rebundling	2124	$	-	
LIS	2124	$	24,788.00	
Collocation	2124	$	-	
Systems Administration	2124	$	2,719,315.00	
Cross Project	2124	$	9,524.00	
2000				
Planning	2124	$	-	Section 3, Pg
Resale	2124	$	70,000.00	
UNE	2124	$	-	
Rebundling	2124	$	-	

LIS	2124	$	-	
Collocation	2124	$	-	
Systems Administration	2124	$	2,965,000.00	
Cross Project	2124	$	830,000.00	

Expenses

Source: Information Technology Group

1997

Planning	Expense	$	4,551,101.00	Section 3, Pg
Resale	Expense	$	3,381,298.00	
UNE	Expense	$	1,056,129.00	
LIS	Expense	$	1,507,095.00	
Collocation	Expense	$	118,554.00	
Systems Administration	Expense	$	15,668,781.00	
Cross Project	Expense	$	-	

1998

Planning	Expense	$	8,548,416.31	Section 3, Pg
Resale	Expense	$	8,395,533.66	
UNE	Expense	$	2,316,022.53	
LIS	Expense	$	1,696.56	
Collocation	Expense	$	562,911.53	
Systems Administration	Expense	$	28,285,356.12	
Cross Project	Expense	$	3,705,450.41	

1999

Planning	Expense	$	5,781,332.00	Section 3, Pg
Resale	Expense	$	8,519,601.00	
UNE	Expense	$	3,836,020.00	
Rebundling	Expense	$	71,499.00	
LIS	Expense	$	5,684,011.00	
Collocation	Expense	$	230,329.00	
Systems Administration	Expense	$	52,420,529.00	
Cross Project	Expense	$	3,787,724.00	

2000

Planning	Expense	$	-	Section 3, Pg
Resale	Expense	$	5,549,881.59	
UNE	Expense	$	3,154,934.17	
Rebundling	Expense	$	364,312.06	
LIS	Expense	$	1,988,566.64	
Collocation	Expense	$	214,812.87	
Systems Administration	Expense	$	60,142,707.38	
Cross Project	Expense	$	7,029,021.61	

SECTION C

Demand

Source: Demand Analysis and Forecasting Group

2000	4,470,971	Section 3, Pg
2001	3,735,714	
2002	3,792,140	
2003	3,931,606	
2004	4,161,226	
2005	4,471,838	
2006	4,790,713	
2007	5,238,836	
2008	5,806,350	

2009	6,494,747
2010	7,390,753

SECTION D

Planning Dollar Allocation

Source: Information Technology Group

% of Planning $ to Include in Capital

1997	100%
1998	27%
1999	33%
2000	0%

% of Planning $ to Include in Expense

1997	29%
1998	55%
1999	84%
2000	0%

g 1

g 2

g 3

g 4

g1

g2

g3

g4

g7

CONFIDENTIAL

[5]

CONFIDENTIAL # [6]

	A	B	C	D	E	F	G
1	Investment						
2	STUDY	OSS Development and Enhancements					
3	DATE	6/26/02 17:31					
4	PRODUCT	TELRIC					
5	GROUP	OSS Development and Enhancements - per Order					
6	EF&I	SD	0.7058279229	0.	0.	2124	
7	COMMON	SD	9.8112630578	0.	0.		
8	GROUP						

	A	B
1	Parameter	
2	SD	
3	7	
4	2	
5	Annual	1
6	Yes	
7	No	
8		
9	11	
10	6550	

	A	B	C	D	E	F	G	H	I	J	K	L	M
1	ACFIN												
2	02SD01E												
3	2124	DEPR-AVG	COM-AVG	IT-AVG	ADVAL	PRODMAN	BF	NTWKOP	NTWKST	GENLST	COMPTR	UNCOLL	ACCNT

	N	O	P	Q	R	S	T	U	V	W
1										
2										
3	HREXP	INTAN	EXEC	PLAN	EXTERN	INFOR	LEGAL	PROCR	RDEXP	GENL

	A	B	C	D	E	F	G	H	I	J	K	L	M
1	ACFOUT Factors For: Interconnection												
2	*-Run Done With Database Vintage: 02SD01E, Dated: 04/08/02*												
3	*-Wholesale Cost Program (TELRIC) Data Base released 04/02 (02SD01E).*												
4	*-Factors loaded from Factors Model (Expense Module), Version 02V1.*												
5	*-CAPITAL RECOVERY factors released 04/02 and based on 10.14% Cost*												
6	*Of Money. No 1-10 year factors developed.*												
7	*-MAINTENANCE factors released 02/02.*												
8	*-RTU factors released 02/01.*												
9	*-AD VALOREM Tax released 02/02.*												
10	*-DIRECTLY ASSIGNED expense factors released 04/02.*												
11	*-BUSINESS FEES released 04/02.*												
12	*-COMMON Expense released 04/02.*												
13	*-TOTAL INSTALLED FACTORS (TIF) released 01/01.*												
14	*-POWER investment factors released 01/01.*												
15	*-SALES TAX released 01/01.*												
16	*-TELCO Engineering factors released 01/01.*												
17	*-INTEREST DURING CONSTRUCTION released 01/01.*												
18	*-LAND AND BUILDING factors released 02/02.*												
19	*-DIRECTLY ATTRIBUTABLE expense factors released 04/02.*												
20	*-SALES EXPENSE factor released 04/02.*												
21	*-PRODUCT MANAGEMENT factor released 04/02.*												
22	*-BILLING & COLLECTION factor released 01/01.*												
23	*-PROVISIONING factors released 01/01.*												
24	*-TELEPHONE PLANT INDEX released 01/01.*												
25	*-STRUCTURE RATIO released 01/01.*												
26													
27													
28													
29													
30													
31													
32													
33													

	A	B	C	D	E	F	G	H	I	J	K	L	M	N	O	P
34																
35																
36																
37																
38	State:	South Dakota														
39																
40	**ACCOUNTS**	**DEPR-AVG**	**COM-AVG**	**IT-AVG**	**ADVAL**	**PRODMAN**	**BF**	**NTWKOP**	**NTWKST**	**GENLST**	**COMPTR**	**UNCOLL**	**ACCNT**	**HREXP**	**INTAN**	**EXEC**
41	2124	0.164850	0.047620	0.018008	0.009546	0.019957	0.001483	0.034832	0.014703	0.088742	0.043342	0.003786	0.007346	0.008294	0.000000	0.011267

	Q	R	S	T	U	V	W
34							
35							
36							
37							
38							
39							
40	**PLAN**	**EXTERN**	**INFOR**	**LEGAL**	**PROCR**	**RDEXP**	**GENL**
41	0.000525	0.037846	0.070887	0.004717	0.001860	0.000006	0.015064



SOUTH DAKOTA

COLLOCATION:
CABLE AUGMENT QPF

QWEST

June 2002

Study ID: 6551

QWEST CORPORATION
Policy and Law

Table of Contents

	Page
I. Executive Summary	3
A. Purpose Scope, and Application	3
B. Description of Service	3
C. Study Methodology	3
D. Description of Long Run Incremental Cos	4
E. Study Assumptions	4
II. Rate Elements	5
III. Work Papers	6
Study Summary	6
Input Sheet	7
Labor Calculations	9
WCP Non-Recurring	10

Executive Summary

A. PURPOSE, SCOPE, AND APPLICATION

The purpose of this study is to determine the non-recurring costs associated with the quote preparation that will be incurred by Qwest to provide Cable Augment requests for customers.

This study develops Qwest average costs. Costs are based on a per unit basis.

B. DESCRIPTION OF SERVICE

This product is only applicable for augments to existing termination cables, the transmission facilities purchased by the CLEC for the purpose of accessing Unbundled Network Elements within the collocated central office.

In order for the Cable Augment QPF to be applicable, the following criteria must be satisfied:

□ Augment terminations must originate and terminate within the same central office.
□ Augment terminations must originate from the same location as existing terminations.
□ Augment terminations must terminate on the same frame as existing terminations.
□ Augment terminations must be of the same transmission facility type (i.e., copper or fiber) as existing terminations.
□ Augment terminations must be of the same signal level (i.e., DS0, DS1, etc.) as existing terminations.

Cost Elements
- *Cable Augment QPF* - a non-recurring element that recovers the labor associated with preparing a quote when a CLEC requests a collocation cable augment for existing terminations to the point of Quote/DWP release. Costs not included in this element are as follows:

1. Travel time
2. OSP
3. Real Estate
4. Installation
5. Procurement
6. Data basing (TIRKS and/or SWITCH)
7. CLEC related issues

C. Study Methodology

Costs were developed from material, engineering and installation labor costs provided by Subject Matter Experts (SME's) in Central Office Engineering and Outside Plant Engineering.

Monthly maintenance costs were developed by taking the element - specific expense and applying the account - code specific maintenance.

The investments/expenses from the above items were then entered into the WCP (Wholesale Cost Program) model, developed and used within QWEST Corporation.

D. DESCRIPTION OF LONG RUN INCREMENTAL COSTS

Long Run Incremental Cost (LRIC) is the method QWEST Corporation uses to estimate product and service costs. It provides a measurement of costs over a period of time long enough to fully adjust to changes of output (including changes in the size of facilities, levels of investment, etc.) in order to optimally accommodate this change. This methodology is forward looking in nature (i.e. LRIC uses the latest technology costs or replacement costs.) Since LRIC is forward looking, it does *not* measure historic investment decisions of the corporation.

The Qwest LRIC format disaggregates the cost results on a unitized basis into the components shown below:

Total Service Long Run Incremental Cost (TSLRIC) --Total Service Long Run Incremental Cost is the forward looking cost avoided (or added) by discontinuing (or offering) an entire service or group of services in the most efficient manner, holding constant the production of all other services produced by the firm. This cost is often referred to in economic terms as direct cost.

Shared Cost (SC)-- The cost associated with the provision of multiple services (service family). This cost is not volume sensitive and is eliminated only if the entire service family is discontinued

Total Service Long Run Incremental Costs plus Shared Costs (TSLRIC+SC)--The Total Service Long Run Incremental Costs for a service plus the Shared Costs of a family of services.

Total Element Long Run Incremental Cost (TELRIC) -- Total Element Long Run Incremental Cost, as defined by the Federal Communications Commission, is the sum of the forward looking direct cost incurred in the production of a network element (as opposed to an entire service), attributed costs considered as shared cost under TSLRIC terminology and selected administrative costs considered as common under TSLRIC terminology.

Common Cost (CC)

For **TSLRIC** purposes, common costs are the current cost incurred for the benefit of the enterprise as a whole. This cost does not vary with the provision of a service or a service family. These costs are sometimes referred to as *general overhead costs.* The Common Cost added to the TSLRIC + SC produces a **Fully Allocated Cost (FAC)** as required by Commission rules.

For **TELRIC** purposes, common costs are the current cost incurred for the benefit of the enterprise as a whole, after those cost that vary with the provisioning of individual network elements are removed. The costs removed from common for TELRIC purposes are included in the TELRIC itself. **Total Long Run Incremental Cost plus TELRIC common costs (TELRIC + CC)** form the basis for pricing Interconnection network elements. TELRIC + CC is the equivalent of fully allocated cost as the term is applied to network elements.

Typically, the cost identified by these cost categories include capital costs for depreciation, return, and income taxes. TSLRIC also includes ongoing operating costs for: administration expense, product management expense, pre sales expense, and business fees.

E. Study Assumptions

1. All costs are forward looking.
2. All work is performed by Qwest.
3. See "Inputs" worksheet.

RATE SUMMARY

	Unit	NRC	State
Cable Augment QPF	Per request	**$ 1,409.96**	DUTH DAKOTA

COLLOCATION: SPACE INQUIRY REPORT

Study Name	*Cable Augment QPF*	
Study Requester	*Vicki Bishara*	
Type of Study	*TELRIC*	
Study ID	*6551*	
Cost Factor Group	*Interconnection*	
Study Applications		
Completion Date	*June 13, 2002*	
Cost Analyst	*Tom Wilkinson*	
Study Review	**Reviewer**	**Date**
	Vicki Bishara	*June 13, 2002*
Cost Models Used	**Model**	**Version and/or Release Date**
	Wholesale Cost Program	*01/08/01 (Version 2.08)*
	Cost Factor Databases	*01/02/01 (Vintage: 02SD01E)*
	Cost Factors Model (TELRIC)	
Cost Factors Used	**Factor**	**Effective Date**
	Capital Recovery	*04/02*
	Maintenance	*02/02*
	Ad Valorem	*02/02*
	Power	*01/01*
	Sales Tax	*01/01*
	Interest During Construction	*01/01*
	COE Land & Bldg	*02/02*
	Directly Assigned Factors	*04/02*
	Directly Attributable Factors	*04/02*
	Common	*04/02*
	Cost Of Money	*10.14%*
Inflation		
Major Cost Drivers		

COLLOCATION: SPACE INQUIRY REPORT

Study Information

	Value
Filing Month	June
Filing Year	2002
State	SD
State Full Name	SOUTH DAKOTA
Run Date	6/13/02
Factor Vintage	*02SD01E*
Study ID	6551

Engineering Rate Inputs

	Value	
COMMON SYSTEMS PLANNING ENGINEERING CENTER (CSPEC)	$ *46.18*	per hour
PROJECT IMPLEMENTATION (ACCOUNT TEAM)	$ *56.97*	per hour
NETWORK ENGINEERING LABOR RATE (N20)	$ *46.18*	per hour
STATE INTERCONNECTION MANAGER (SICM)	$ *69.25*	per hour
NETWORK MAINTENANCE (L40)	$ *43.81*	per hour
COLLOCATION PROJECT MANAGEMENT CENTER	$ *56.97*	per hour

Labor Calculation

COMMON SYSTEMS PLANNING ENGINEERING CENTER (CSPEC)		
	7.20	hour(s) {per Network}
ENGINEERING		
	6.00	hour(s) {per Network}
STATE INTERCONNECTION MANAGER (SICM)		
	0.50	hour(s) {per Network}
WALK THROUGH		
	1.00	hour(s) {per Network}
COLLOCATION PROJECT MANAGEMENT CENTER (CPMC)		
Review for completeness resolve discrepancies	0.50	hour(s) {per Network}
Determine engineering contacts/make copies and distribute	0.50	hour(s) {per Network}
Log to master tracking spreadsheet w/appropriate dates	0.25	hour(s) {per Network}
Host meeting w/USW reps and co-provider	1.00	hour(s) {per Network}
Serve as point of contact between engr and customer	0.50	hour(s) {per Network}
Track, escalate, ensure feasibility time frames are met	0.50	hour(s) {per Network}
Prepare feasibility letter, send to AE, prod mgmt and file	0.50	hour(s) {per Network}
PROJECT IMPLEMENTATION (ACCOUNT TEAM)		
	1.75	hour(s) {per Network}

Factors

	Value
WCP Version	*2.08*
Cost of Money	*10.14%*
Capital Recovery	*04/02*
Maintenance	*02/02*
Ad Valorem	*02/02*
Power	*01/01*
Sales Tax	*01/01*
Interest During Construction	*01/01*
COE Land & Bldg	*02/02*
Directly Assigned Factors	*04/02*
Directly Attributable Factors	*04/02*
Common	*04/02*

COLLOCATION: SPACE INQUIRY REPORT

Vintage	*02SD01E*
Investment Loadings	
Power	*0.069700*
Sales Tax	*0.056400*
Interest During Construction	*0.006100*
COE Land And Building Investment	
Building	*0.199833*
Land	*0.003732*
Investment Based Monthly Direct Costs	
Depreciation	*0.109717*
Cost Of Money	*0.045455*
Income Tax Expense	*0.017189*
Maintenance	*0.025490*
Ad Valorem Tax	*0.009546*
COE Land And Building Cost	
COE Building	*0.151319*
COE Land	*0.155318*
Marketing & Business Fees	
Product Management Expense	*0.019957*
Sales Expense	*0.011877*
Product Advertising Expense	*0.000000*
Business Fees (Other Operating Taxes)	*0.001483*
Other Direct Expenses	
Network Operations	*0.034832*
Network Support Assets	*0.014703*
General Support Assets	*0.088742*
General Purpose Computers	*0.043342*
Uncollectible	*0.003786*
Accounting & Finance Expense	*0.007346*
Human Resources Expense	*0.008294*
Information Management Expense	*0.070887*
Intangibles	*0.000000*
State Prescribed Directly Attributed	*0.000000*
Common	
Executive Expense	*0.011267*
Planning Expense	*0.000525*
External Relations Expense	*0.037846*
Legal Expense	*0.004717*
Other Procurement Expense	*0.001860*
Research & Development Expense	*0.000006*
Other General and Admin Expense	*0.015064*
State Prescribed Common	*0.000000*

LABOR CALCULATIONS

Work Item	Hours Per Request	Time Minutes	Prob	Applied Time (Minutes)	Labor /Hour	Cost
A	B	C	D	E	F	G
				C * D		
-PROJECT IMPLEMENTATION (ACCOUNT TEAM)						
REVIEW EIC REQUEST, ENTER INTO AQCB SYSTEM, MONITOR REQUEST PROGRESS						
Review EIC request, enter AQCB, monitor	1.75	105.00	1.000	105.00	$ 56.97	$99.70
Subtotal - PRODUCT MANAGEMENT IMPLEMENTATION (PMI)				**105.00**		**$99.70**
-COLLOCATION PROJECT MANAGEMENT CENTER (CPMC)						
REVIEW INFORMATION FROM OSP, CSPEC, BRI, AND SEND TO PMI, PUT TOGETHER INVESTMENT PACKAGE						
Review for completeness resolve discrepancies	0.50	30.00	1.000	30.00	$ 56.97	$28.49
Determine engineering contacts/make copies and distribute	0.50	30.00	1.000	30.00	$ 56.97	$28.49
Log to master tracking spreadsheet w/appropriate dates	0.25	15.00	1.000	15.00	$ 56.97	$14.24
Host meeting w/USW reps and co-provider	1.00	60.00	1.000	60.00	$ 56.97	$56.97
Serve as point of contact between engr and customer	0.50	30.00	1.000	30.00	$ 56.97	$28.49
Track, escalate, ensure feasibility time frames are met	0.50	30.00	1.000	30.00	$ 56.97	$28.49
Prepare feasibility letter, send to AE, prod mgmt and file	0.50	30.00	1.000	30.00	$ 56.97	$28.49
Subtotal - COLLOCATION PROJECT MANAGEMENT CENTER (CPMC)				**225.00**		**$213.64**
-ENGINEERING						
	6.00	360.00	1.000	360.00	$ 46.18	$277.08
Subtotal - ENGINEERING				**360.00**		**$277.08**
-COMMON SYSTEMS PLANNING ENGINEERING CENTER (CSPEC)						
	7.20	432.00	1.000	432.00	$ 46.18	$332.50
Subtotal - COMMON SYSTEMS PLANNING ENGINEERING CENTER (CSPEC)				**432.00**		**$332.50**
-STATE INTERCONNECTION MANAGER (SICM)						
	0.50	30.00	1.000	30.00	$ 69.25	$34.63
Subtotal - STATE INTERCONNECTION MANAGER (SICM)				**30.00**		**$34.63**
-WALK THROUGH						
	1.00	60.00	1.000	60.00	$ 43.81	$43.81
Subtotal - WALK THROUGH				**60.00**		**$43.81**

LABOR CALCULATIONS

Work Item	Hours Per Request	Time Minutes	Prob	Applied Time (Minutes)	Labor /Hour	Cost
A	B	C	D	E	F	G
				C * D		
Total						**$1,001.35**

WCP Non-Recurring

	Factor Value		Space Inquiry Report
Expense			$1,001.35
Marketing & Business Fees			
Product Management Expense	0.019957	$	19.98
Sales Expense	0.011877	$	11.89
Product Advertising Expense	0.000000	$	-
Business Fees (Other Operating Ta›	0.001483	$	1.53
Marketing & Business Fees Total		$	33.41
Sub-Total Invst., B&C, Marketing		$	1,034.76
Other Direct Expenses			
Network Operations	0.034832	$	36.04
Network Support Assets	0.014703	$	15.21
General Support Assets	0.088742	$	91.83
General Purpose Computers	0.043342	$	44.85
Uncollectible	0.003786	$	3.92
Accounting & Finance Expense	0.007346	$	7.60
Human Resources Expense	0.008294	$	8.58
Information Management Expense	0.070887	$	73.35
Intangibles	0.000000	$	-
State Prescribed Directly Attributed	0.000000		$0.00
Total Other Direct Expenses		$	281.38
TELRIC		$	1,316.14
Common			
Executive Expense	0.011267	$	14.83
Planning Expense	0.000525	$	0.69
External Relations Expense	0.037846	$	49.81
Legal Expense	0.004717	$	6.21
Other Procurement Expense	0.001860	$	2.45
Research & Development Expense	0.000006	$	0.01
Other General and Admin Expense	0.015064	$	19.83
State Prescribed Common	0.000000		$0.00
Common Costs		$	93.82
TELRIC + Common Costs		$	1,409.96

POLE AND CABLE ATTACHMENT RATES

Maximum Annual Rates Calculated per FCC Formulas

State:	South Dakota
Data Year:	2000
Rate Effective Year:	2001

Pole Attachment Rate - Cable **$2.79**

(Rate shown is per Pole Attachment)

Pole Attachment Rates - Telecom

(Rates shown are per Pole Attachment)

Urban Area Rate:	
Actual Calculated Rate	**$4.21**
*Phase-In Rate Effective for 2002 **	**$3.36**
Non-Urban Area Rate:	
Actual Calculated Rate	**$6.35**
*Phase-In Rate Effective for 2002 **	**$4.21**

Conduit Rate **$0.2815**

(Rate shown is per Attachment per Linear Foot)

* Calculated as the Cable Rate + 20% of the difference between the Telecom Rate and the Cable Rate. For 2002 the phase-in percentage is 40%, resulting in the following rates:

Urban	$3.36
Non-Urban	$4.21

For 2003 the phase-in percentage is 60%, resulting in the following rates:

Urban	$3.64
Non-Urban	$4.93

For 2004 the phase-in percentage is 80%, resulting in the following rates:

Urban	$3.93
Non-Urban	$5.64

CABLE AND TELECOM FORMULAS
FOR DETERMINING MAXIMUM RATES FOR USE OF LEC UTILITY POLES
Using FCC Methodology (If Positive Net Pole Investment)
2001 Rates - South Dakota

General Calculations:

1.	**NET POLE INVESTMENT**		
A.	Gross Pole Investment (Account 2411 - Poles)	$4,542,000	
B.	Accumulated Depreciation (Account 3124.11 - Poles)	$8,379,090	
C.	Accumulated Deferred Income Taxes (Account 4340 - Poles) (see Note 1)	($1,539,123)	
D.	Accumulated Deferred Income Taxes (FCC Proration Method) (see Note 2)	$201,533	
E.	Net Pole Investment 1E = 1A-1B-1C	($2,297,967)	**NOTE:** If this is negative, use Worksheet 2
2.	**NET TOTAL PLANT INVESTMENT**		
A.	Gross Plant Investment (Account 2001)	$682,069,000	
B.	Accumulated Depreciation (Accounts 3100, 3400, and 3500) (see Note 3)	$391,963,000	
C.	Accumulated Deferred Income Taxes (Accounts 4100 and 4340)	$30,264,000	
D.	Net Plant Investment 2D = 2A-2B-2C	$259,842,000	
3.	**DEPRECIATION ELEMENT**		
A.	Depreciation Rate for Gross Pole Investment (FCC/ARMIS Prescribed)	0.1220	
B.	Gross Pole Investment (Line 1A)	$4,542,000	
C.	Net Pole Investment (Line 1E)	($2,297,967)	
D.	Depreciation Element 3D = (3B/3C)*3A	(0.2411)	
4.	**MAINTENANCE ELEMENT**		
A.	Maintenance Expense - Poles (Account 6411)	$44,000	
B.	Rental Expense - Poles (Account 6411 EXTCs CPQ, CPU, CP7, 59A)	$30,557	
C.	Net Maintenance Expense - Poles 4C = 4A-4B	$13,443	
D.	Net Pole Investment (Line 1E)	($2,297,967)	
E.	Maintenance Element 4E = 4C/4D	(0.0059)	
5.	**ADMINISTRATIVE ELEMENT**		
A.	Total General and Administrative Expense (Accounts 6710 and 6720)	$21,695,010	
B.	Net Plant Investment (Line 2D)	$259,842,000	
C.	Administrative Element 5C = 5A/5B	0.0835	
6.	**TAXES ELEMENT**		
A.	Total Operating Taxes (Account 7200)	$22,781,000	
B.	Net Plant Investment (Line 2D)	$259,842,000	
C.	Taxes Element 6C = 6A/6B	0.0877	
7.	**RETURN ELEMENT**		
A.	Authorized Rate of Return	0.1014	
8.	**CARRYING CHARGE RATE**		
A.	Sum of Carrying Charge Rate Elements 8A = 3D+4E+5C+6C+7A	0.0256	
9.	**OTHER INFORMATION**		
A.	Pole Space Occupied per Attachment	1	
B.	Usable Pole Space	13.5	
C.	Unusable Pole Space	24	
D.	Pole Height 9D = 9B+9C	37.5	
E.	Number of Attaching Entities - Urbanized	5	
F.	Number of Attaching Entities - Non-Urbanized	3	
G.	Total Number of Poles	15,927	

CABLE AND TELECOM FORMULAS
FOR DETERMINING MAXIMUM RATES FOR USE OF LEC UTILITY POLES
Using FCC Methodology (If Positive Net Pole Investment)
2001 Rates - South Dakota

FCC Cable Formula:

MAXIMUM RATE PER POLE = (SPACE OCCUPIED / USABLE SPACE) x (NET POLE INVESTMENT / TOTAL NUMBER OF POLES) x 0.95 x CARRYING CHARGE RATE

10. MAXIMUM YEARLY RATE PER POLE PER ATTACHMENT CALCULATION		
A.	Space Factor = Space Occupied/Usuable Space 10A = 9A/9B	0.0741
B.	Net Cost of a Bare Pole = (Net Pole Investment/Total Number of Poles) x 0.95 10B = (1E/9G)*.95	($137.07)
C.	Maximum Yearly Rate per Pole per Attachment 10C = 10A*10B*8A	($0.2597)

FCC Telecom Formula:

MAXIMUM RATE PER POLE = [(SPACE OCCUPIED + (2/3 x (UNUSABLE SPACE / NO. OF ATTACHING ENTITIES))) / POLE HEIGHT] x (NET POLE INVESTMENT / TOTAL NUMBER OF POLES) x 0.95 x CARRYING CHARGE RATE

11. MAXIMUM YEARLY RATE PER POLE PER ATTACHMENT CALCULATION - URBANIZED		
A.	Unusable Space Portion = 2/3 x (Unusable Space/No. of Attaching Entities) 11A = 2/3*(9C/9E)	3.200
B.	Space Factor = (Space Occupied + Unusable Space Portion)/Pole Height 11B = (9A+11A)/9D	0.112
C.	Net Cost of a Bare Pole = (Net Pole Investment/Total Number of Poles) x 0.95 11C = (1E/9G)*.95	($137.07)
D.	Maximum Yearly Rate per Pole per Attachment 11D = 11B*11C*8A	($0.3927)

12. MAXIMUM YEARLY RATE PER POLE PER ATTACHMENT CALCULATION - NON-URBANIZED		
A.	Unusable Space Portion = 2/3 x (Unusable Space/No. of Attaching Entities) 12A = 2/3*(9C/9F)	5.333
B.	Space Factor = (Space Occupied + Unusable Space Portion)/Pole Height 12B = (9A+12A)/9D	0.169
C.	Net Cost of a Bare Pole = (Net Pole Investment/Total Number of Poles) x 0.95 12C = (1E/9G)*.95	($137.07)
D.	Maximum Yearly Rate per Pole per Attachment 12D = 12B*12C*8A	($0.5921)

CABLE AND TELECOM FORMULAS
FOR DETERMINING MAXIMUM RATES FOR USE OF LEC UTILITY POLES
Using FCC Methodology (If Positive Net Pole Investment)
2001 Rates - South Dakota

Calculation Methodology Sources:

FCC 01-170, CS Docket Nos. 97-98 and 97-151, Consolidated Partial Order on Reconsideration, Released 5-25-2001
Appendix D-1 for Cable Formula
Appendix E-1 for Telecom Formula

Notes:

1. Accumulated Deferred Income Taxes, as defined by the FCC, is the sum of Accounts 4100 and 4340. Qwest does not include Property related (including Pole) Deferred taxes in Account 4100; therefore only that portion of Account 4340 specific to poles was used in this calculation.

2. The FCC's Order, in discussing Accumulated Deferred Income Taxes for Conduit investment, requires the following proration method be used for the calculation of the conduit portion of accumulated deferred taxes, until such time (after 2001) as the investment specific accumulated deferred tax information is available in the ARMIS 43-02 Report: (for this illustration, the conduit references were changed to poles)

A. Gross Pole Investment (Line 1A)	$4,542,000
B. Total Gross Plant Investment (Line 2A)	$682,069,000
C. Total Accumulated Deferred Income Taxes (Line 2C)	$30,264,000
D. Accumulated Deferred Income Taxes for Poles D = (A/B)*C	$201,533

However, this Proration Formula cannot be used for Pole investment accumulated deferred taxes because, in most states, the specific pole accumulated deferred tax balance is a debit amount and the total company accumulated deferred tax amount is always a credit balance. Thus, the use of the Proration Formula will result in an obviously incorrect number (I.e., the calculation will yield a credit amount vs. the correct debit amount for pole related accumulated deferred taxes).

3. Although the FCC's instructions refer only to Accumulated Depreciation Account 3100, the Gross Plant Investment summary account 2001 (shown on Line 2A) also includes Accounts 2680 (Amortizable Tangible Assets) and 2690 (Intangibles). Thus, the related Accumulated Amortization Accounts 3400 and 3500 must also be included in the Accumulated Depreciation amount used for this calculation in order to appropriately reflect the Net Plant Investment amount shown on Line 2D.

CABLE AND TELECOM FORMULAS
FOR DETERMINING MAXIMUM RATES FOR USE OF LEC UTILITY POLES
Using FCC Methodology (If Negative Net Pole Investment)
2001 Rates - South Dakota

General Calculations:

1.	**NET POLE INVESTMENT**	
A.	Gross Pole Investment (Account 2411 - Poles)	$4,542,000
B.	Accumulated Depreciation (Account 3124.11 - Poles)	$8,379,090
C.	Accumulated Deferred Income Taxes (Account 4340 - Poles) (see Note 1)	($1,539,123)
D.	Accumulated Deferred Income Taxes (FCC Proration Method) (see Note 2)	$201,533
E.	Net Pole Investment 1E = 1A-1B-1C	($2,297,967)
2.	**NET TOTAL PLANT INVESTMENT**	
A.	Gross Plant Investment (Account 2001)	$682,069,000
B.	Accumulated Depreciation (Accounts 3100, 3400, and 3500) (see Note 3)	$391,963,000
C.	Accumulated Deferred Income Taxes (Accounts 4100 and 4340)	$30,264,000
D.	Net Plant Investment 2D = 2A-2B-2C	$259,842,000
3.	**DEPRECIATION ELEMENT**	
A.	Depreciation Rate for Gross Pole Investment (FCC/ARMIS Prescribed)	0.1220
4.	**MAINTENANCE ELEMENT**	
A.	Maintenance Expense - Poles (Account 6411)	$44,000
B.	Rental Expense - Poles (Account 6411 - EXTCs CPQ, CPU, CP7, 59A)	$30,557
C.	Net Maintenance Expense - Poles 4C = 4A-4B	$13,443
D.	Gross Pole Investment (Line 1A)	$4,542,000
E.	Maintenance Element 4E = 4C/4D	0.0030
5.	**ADMINISTRATIVE ELEMENT**	
A.	Total General and Administrative Expense (Accounts 6710 and 6720)	$21,695,010
B.	Gross Plant Investment (Line 2A)	$682,069,000
C.	Administrative Element 5C = 5A/5B	0.0318
6.	**TAXES ELEMENT**	
A.	Total Operating Taxes (Account 7200)	$22,781,000
B.	Gross Plant Investment (Line 2A)	$682,069,000
C.	Taxes Element 6C = 6A/6B	0.0334
7.	**RETURN ELEMENT**	
A.	Authorized Rate of Return	0.1014
B.	Net Pole Investment (Line 1E)	($2,297,967)
C.	Gross Pole Investment (Line 1A)	$4,542,000
D.	Return Element 7D = (7A*7B)/7C	(0.0513)
8.	**CARRYING CHARGE RATE**	
A.	Sum of Carrying Charge Rate Elements 8A = 3A+4E+5C+6C+7D	0.1389
9.	**OTHER INFORMATION**	
A.	Pole Space Occupied per Attachment	1
B.	Usable Pole Space	13.5
C.	Unusable Pole Space	24
D.	Pole Height 9D = 9B+9C	37.5
E.	Number of Attaching Entities - Urbanized	5
F.	Number of Attaching Entities - Non-Urbanized	3
G.	Total Number of Poles	15,927

CABLE AND TELECOM FORMULAS
FOR DETERMINING MAXIMUM RATES FOR USE OF LEC UTILITY POLES
Using FCC Methodology (If Negative Net Pole Investment)
2001 Rates - South Dakota

FCC Cable Formula:

MAXIMUM RATE PER POLE = [(SPACE OCCUPIED / USABLE SPACE) x 0.95 x GROSS POLE INVESTMENT x CARRYING CHARGE RATE] / TOTAL NUMBER OF POLES

Restated in the same format as the Positive Net Investment Formula:

MAXIMUM RATE PER POLE = (SPACE OCCUPIED / USABLE SPACE) x (GROSS POLE INVESTMENT / TOTAL NUMBER OF POLES) x 0.95 x CARRYING CHARGE RATE

10. MAXIMUM YEARLY RATE PER POLE PER ATTACHMENT CALCULATION

A.	Space Factor = Space Occupied/Usuable Space 10A = 9A/9B	0.0741
B.	Gross Cost of a Bare Pole = (Gross Pole Investment/Total No. of Poles) x .95 10B = (1A/9G)*.95	$270.92
C.	Maximum Yearly Rate per Pole per Attachment 10C = 10A*10B*8A	$2.7867

FCC Telecom Formula:

MAXIMUM RATE PER POLE = {[(SPACE OCCUPIED + (2/3 x (UNUSABLE SPACE / NO. OF ATTACHING ENTITIES))) / POLE HEIGHT] x 0.95 x GROSS POLE INVESTMENT x CARRYING CHARGE RATE} / TOTAL NUMBER OF POLES)

Restated in the same format as the Positive Net Investment Formula:

MAXIMUM RATE PER POLE = {[(SPACE OCCUPIED + (2/3 x (UNUSABLE SPACE / NO. OF ATTACHING ENTITIES))) / POLE HEIGHT] x (GROSS POLE INVESTMENT / TOTAL NUMBER OF POLES) x 0.95 x CARRYING CHARGE RATE

11. MAXIMUM YEARLY RATE PER POLE PER ATTACHMENT CALCULATION - URBANIZED

A.	Unusable Space Portion = 2/3 x (Unusable Space/No. of Attaching Entities) 11A = 2/3*(9C/9E)	3.200
B.	Space Factor = (Space Occupied + Unusable Space Portion)/Pole Height 11B = (9A+11A)/9D	0.112
C.	Gross Cost of a Bare Pole = (Gross Pole Investment/Total No. of Poles) x 0.95 11C = (1A/9G)*.95	$270.92
D.	Maximum Yearly Rate per Pole per Attachment 11D = 11B*11C*8A	$4.2136

12. MAXIMUM YEARLY RATE PER POLE PER ATTACHMENT CALCULATION - NON-URBANIZED

A.	Unusable Space Portion = 2/3 x (Unusable Space/No. of Attaching Entities) 12A = 2/3*(9C/9F)	5.333
B.	Space Factor = (Space Occupied + Unusable Space Portion)/Pole Height 12B = (9A+12A)/9D	0.169
C.	Gross Cost of a Bare Pole = (Gross Pole Investment/Total No. of Poles) x 0.95 12C = (1A/9G)*.95	$270.92

CABLE AND TELECOM FORMULAS
FOR DETERMINING MAXIMUM RATES FOR USE OF LEC UTILITY POLES
Using FCC Methodology (If Negative Net Pole Investment)
2001 Rates - South Dakota

D. Maximum Yearly Rate per Pole per Attachment	12D = 12B*12C*8A	$6.3538

CABLE AND TELECOM FORMULAS
FOR DETERMINING MAXIMUM RATES FOR USE OF LEC UTILITY POLES
Using FCC Methodology (If Negative Net Pole Investment)
2001 Rates - South Dakota

Calculation Methodology Sources:

FCC 01-170, CS Docket Nos. 97-98 and 97-151, Consolidated Partial Order on Reconsideration, Released 5-25-2001
Page 24 for Cable Formula
Appendix E-1, supplemented by page 24, for Telecom Formula

Notes:

1. Accumulated Deferred Income Taxes, as defined by the FCC, is the sum of Accounts 4100 and 4340. Qwest does not include Property related (including Pole) Deferred taxes in Account 4100; therefore only that portion of Account 4340 specific to poles was used in this calculation.

2. The FCC's Order, in discussing Accumulated Deferred Income Taxes for Conduit investment, requires the following proration method be used for the calculation of the conduit portion of accumulated deferred taxes, until such time (after 2001) as the investment specific accumulated deferred tax information is available in the ARMIS 43-02 Report: (for this illustration, the conduit references were changed to poles)

A. Gross Pole Investment (Line 1A)	$4,542,000
B. Total Gross Plant Investment (Line 2A)	$682,069,000
C. Total Accumulated Deferred Income Taxes (Line 2C)	$30,264,000
D. Accumulated Deferred Income Taxes for Poles D = (A/B)*C	$201,533

However, this Proration Formula cannot be used for Pole investment accumulated deferred taxes because, in most states, the specific pole accumulated deferred tax balance is a debit amount and the total company accumulated deferred tax amount is always a credit balance. Thus, the use of the Proration Formula will result in an obviously incorrect number (I.e., the calculation will yield a credit amount vs. the correct debit amount for pole related accumulated deferred taxes).

3. Although the FCC's instructions refer only to Accumulated Depreciation Account 3100, the Gross Plant Investment summary account 2001 (shown on Line 2A) also includes Accounts 2680 (Amortizable Tangible Assets) and 2690 (Intangibles). Thus, the related Accumulated Amortization Accounts 3400 and 3500 must also be included in the Accumulated Depreciation amount used for this calculation in order to appropriately reflect the Net Plant Investment amount shown on Line 2D.

FORMULA FOR DETERMINING MAXIMUM RATE FOR USE OF LEC UTILITY CONDUIT

Using FCC Methodology

2001 Rates - South Dakota

General Calculations:

1.	**NET CONDUIT INVESTMENT**	
A.	Gross Conduit Investment (Account 2441 - Conduit)	$27,095,000
B.	Accumulated Depreciation (Account 3124.41 - Conduit)	$9,219,460
C.	Accumulated Deferred Income Taxes (Account 4340 - Conduit) (see Note 1)	$3,775,221
D.	Accumulated Deferred Income Taxes (FCC Proration Method) (see Note 2)	$1,202,229
E.	Net Conduit Investment 1E = 1A-1B-1D	$16,673,311
2.	**NET TOTAL PLANT INVESTMENT**	
A.	Gross Plant Investment (Account 2001)	$682,069,000
B.	Accumulated Depreciation (Account 3100)	$391,963,000
C.	Accumulated Deferred Income Taxes (Accounts 4100 and 4340)	$30,264,000
D.	Net Plant Investment 2D = 2A-2B-2C	$259,842,000
3.	**DEPRECIATION ELEMENT**	
A.	Depreciation Rate for Gross Pole Investment (FCC/ARMIS Prescribed)	0.0210
B.	Gross Conduit Investment (Line 1A)	$27,095,000
C.	Net Conduit Investment (Line 1E)	$16,673,311
D.	Depreciation Element 3D = (3B/3C)*3A	0.0341
4.	**MAINTENANCE ELEMENT**	
A.	Maintenance Expense - Conduit (Account 6441)	$208,000
B.	Net Conduit Investment (Line 1E)	$16,673,311
C.	Maintenance Element 4C = 4A/4B	0.0125
5.	**ADMINISTRATIVE ELEMENT**	
A.	Total General and Administrative Expense (Accounts 6710 and 6720)	$21,695,010
B.	Net Plant Investment (Line 2D)	$259,842,000
C.	Administrative Element 5C = 5A/5B	0.0835
6.	**TAXES ELEMENT**	
A.	Total Operating Taxes (Account 7200)	$22,781,000
B.	Net Plant Investment (Line 2D)	$259,842,000
C.	Taxes Element 6C = 6A/6B	0.0877
7.	**RETURN ELEMENT**	
A.	Authorized Rate of Return	0.1014
8.	**CARRYING CHARGE RATE**	
A.	Sum of Carrying Charge Rate Elements 8A = 3D+4C+5C+6C+7A	0.3192
9.	**OTHER INFORMATION**	
A.	Percentage of Conduit Duct Capacity Occupied per Attachment	0.5
B.	Conduit Duct in Km	2,881
C.	Km per Mile	1.6093
D.	Feet per Mile	5,280

FORMULA FOR DETERMINING MAXIMUM RATE FOR USE OF LEC UTILITY CONDUIT

Using FCC Methodology

2001 Rates - South Dakota

FCC Formula:

MAXIMUM RATE PER LINEAR FOOT = PERCENTAGE OF CONDUIT CAPACITY x (NET CONDUIT INVESTMENT / SYSTEM DUCT LENGTH (feet)) **x CARRYING CHARGE RATE**

10. MAXIMUM YEARLY RATE PER LINEAR FOOT CALCULATION

A.	System Duct Length in Linear Feet 10A = (9B/9C)*9D	9,452,358
B.	Net Conduit Investment per Linear Foot 10B = 1E/10A	$1.7639
C.	Maximum Yearly Rate per Linear Foot 10C = 9A*10B*8A	$0.2815

Calculation Methodology Source:

FCC 01-170, Appendix F-1, in CS Docket Nos. 97-98 and 97-151, Consolidated Partial Order on Reconsideration, Released 5-25-2001

Notes:

1. Accumulated Deferred Income Taxes, as defined by the FCC, is the sum of Accounts 4100 and 4340. Qwest does not include Property related (including Conduit) Deferred taxes in Account 4100; therefore only that portion of Account 4340 specific to conduit was used in this calculation. However, this amount will not be used in the Conduit Formula until 2002 data is available -- see Note 2.

2. Although available from Qwest's internal records, Accumulated Deferred Income Taxes specific to conduit investment will not be available in the ARMIS Report 43-02 until after 2001. Until that time, the FCC requires the following proration method be used for the calculation of the conduit portion of accumulated deferred income taxes:

A.	Gross Conduit Investment (Line 1A)	$27,095,000
B.	Total Gross Plant Investment (Line 2A)	$682,069,000
C.	Total Accumulated Deferred Income Taxes (Line 2C)	$30,264,000
D.	Accumulated Deferred Income Taxes for Conduit D = (A/B)*C	$1,202,229

3. Although the FCC's instructions refer only to Accumulated Depreciation Account 3100, the Gross Plant Investment summary account 2001 (shown on Line 2A) also includes Accounts 2680 (Amortizable Tangible Assets) and 2690 (Intangibles). Thus, the related Accumulated Amortization Accounts 3400 and 3500 must also be included in the Accumulated Depreciation amount used for this calculation in order to appropriately reflect the Net Plant Investment amount shown on Line 2D.

INPUT DATA

State: South Dakota
Year: 2000

ARMIS Data

Description	ARMIS Report Row /Column	Total	
43-03 Report ($000's) (see NOTE 1)			
Gross Plant Investment (TPIS)	2001 (b)	682,069	682,069
Gross Pole Investment	2411 (b)	4,542	4,542
Gross Conduit Investment	2441 (b)	27,095	27,095
Total Accumulated Depreciation			
Account 3100	3100 (b)	388,449	388,449
Account 3400	3400 (b)	1,825	1,825
Account 3500	3500 (b)	1,689	1,689
		391,963	
Total Accum. Deferred Income Tax			
Account 4100	4100 (b)	(3,247)	(3,247)
Account 4340	4340 (b)	33,511	33,511
		30,264	
Maintenance Expense - Poles	6411 (b)	44	44
Maintenance Expense - Conduit	6441 (b)	208	208
Total General and Admin Expense			
Account 6710	6710 (b)	2,336	2,336
Account 6720 (see NOTE 2)	6720 (b)	27,434	27,434
		29,770	
Total Operating Taxes	7200 (b)	22,781	22,781
43-08 Report - Table I.A (see NOTE 1)			
Total Number of Poles	column v	15,927	
Conduit Duct in Km	column x	2,881	

MR Booked Amounts

	EXTC		
Account 6411 - Pole Rental Expense	CPQ	5	5
	CPU	5	5
	CP7	7	7
	59A	30,540	30,540
		30,557	
	Account		
Accumulated Depreciation - Poles	3124.11	8,379,090	8,379,090
Accumulated Depreciation - Conduit	3124.41	9,219,460	9,219,460

INPUT DATA

Prescribed Rates

Rate of Return (State)		10.1400%
Pole Depreciation Rate (FCC/ARMIS)		0.1220
Conduit Depreciation Rate (FCC/ARMIS)		0.0210

FCC Rebuttable Presumptions

Pole Space Occupied per Attch.	(in feet)	1.0
Usuable Pole Space	(in feet)	13.5
Unusable Pole Space	(in feet)	24.0
Pole Height	(in feet)	37.5
Number of Attaching Entities - Urban		5
Number of Attaching Entities - Non-Urban		3
Conduit Duct Capacity Occupied by Attach (%)		0.5

Standard Conversion Rates

Km per Mile	1.6093
Feet per Mile	5,280

NOTES:

(1) Malheur results are included in the Idaho-South results shown on ARMIS 43-03 and 43-08

(2) The 2000 ARMIS results reflect several significant merger related and out-of-period bookings to Account 6728.99. These amounts, shown below, must be removed from the expenses used to develop the Pole and Conduit Attachment rates.

	Total	
	8,074,990	8,074,990

INPUT DATA

ARMIS Extracts

43-03: Table I. Regulated/Nonregulated Data

Year	COSA	Company Name	Sub_#	Row_#	Row_Title	Total_b
2000	NWSD	Qwest-South Dakota	1	6411	Poles	44
2000	NWSD	Qwest-South Dakota	1	6441	Conduit Systems	208
2000	NWSD	Qwest-South Dakota	1	6710	Executive and Planning	2336
2000	NWSD	Qwest-South Dakota	1	6720	General & Administrative	27434
2000	NWSD	Qwest-South Dakota	1	7200	Operating Taxes	22781
2000	NWSD	Qwest-South Dakota	1	2411	Poles	4542
2000	NWSD	Qwest-South Dakota	1	2441	Conduit Systems	27095
2000	NWSD	Qwest-South Dakota	1	2001	TPIS	682069
2000	NWSD	Qwest-South Dakota	1	3100	Accum Depreciation	388449
2000	NWSD	Qwest-South Dakota	1	3400	Accum Amort-tangibles	1825
2000	NWSD	Qwest-South Dakota	1	3500	Accum Amort-intangibles	1689
2000	NWSD	Qwest-South Dakota	1	4100	Net Current Deferred	-3247
2000	NWSD	Qwest-South Dakota	1	4340	Net Noncurrent Deferred	33511

INPUT DATA

43-08: Table Ia. Outside Plant Statistics-Cable and Wire Facilities

Year	COSA	Company Name	Sub_#	Row_#	Row_Title	Equivalent_ No_of_Poles _v	Conduit_S ys_Duct_ Km_x
2000	USTR	QWEST CORPORATI ON	2	520	South Dakota	15927	2881

Qwest Corporation
Summary of Deferred Taxes for Poles and Conduit
Tax Year Ending December 31, 2000

	Deferred Taxes - 4340	
States	Poles	Conduit
Arizona	1,766,201	52,527,491
Colorado	(790,037)	51,106,815
Iowa	(2,601,594)	6,839,957
Idaho - C	(270,130)	8,282,917
Idaho - Pacific	(73,634)	350,374
Minnesota	(2,098,042)	22,134,145
Montana	(1,124,073)	3,228,804
North Dakota	(771,415)	1,265,984
Nebraska	(873,016)	5,216,671
New Mexico	(1,015,038)	12,111,263
Oregon	40,803	32,387,239
South Dakota	(1,539,123)	3,775,221
Utah	(377,315)	15,366,076
Washington	(1,450,350)	47,001,914
Wyoming	112,939	5,708,093

( ) Denotes Debit Balance

Source: Qwest Tax Department