Petition of
Qwest
TC01-098

TC01-098

ride the light

Qwest

July 26, 2001

RECEIVED

JUL 27 2001

SOUTH DAKOTA PUBLIC UTILITIES COMMISSION

VIA UPS OVERNIGHT

Debra Elofson, Executive Director
SD Public Utilities Commission
500 E. Capitol
Pierre, SD 57501

Re: In the Matter of Determining Prices for Unbundled Network Elements (UNEs) in Qwest Corporation's Statement of Generally Available Terms (SGAT)

Dear Ms Elofson,

Please find the original and ten (10) paper copies of the Petition of Qwest Corporation for Initiation of Cost Docket and its Attachments. I have also enclosed five (5) electronic copies of the Attachments on compact disc.

Accompanying the Petition are the following cost studies and price lists:

- Attachment 1 Study No. 5393 - Integrated Cost Model (ICM) Outputs
- Attachment 2 Study No. 5336 – Collocation
- Attachment 3 Study No. 5436 - Line Sharing Collocation
- Attachment 4 Study No. 5116 - OSS Line Sharing
- Attachment 5 Study No. 5417 - Hi-Cap Unbundled Network Elements (DS1/DS3 Capable Loops, DS1 Capable Feeder, Dark Fiber)
- Attachment 6 Study No. 5362 - Subloop Distribution, Building Cable
- Attachment 7 Study No. 5453 - Vertical Features Per Port
- Attachment 8 Study No. 5476 - Cap Lease Per Port
- Attachment 9 Study No. 5431 - Channel Regeneration
- Attachment 10 Pole Attachment
- Attachment 11 Conduit Attachment
- Attachment 12 Study No. 5359 - Daily Usage Record
- Attachment 13 Study No. 5432 - Direct CLEC to CLEC
- Attachment 14 Study No. 5363 - Low Side Channel Performance

- Attachment 15 Study No. 5360 - ICNAM
- Attachment 16 Study No. 5355 - Category 11
- Attachment 17 Study No. 5172 - CLASS Call Trace
- Attachment 18 Study No. 5433 - Space Reservation Option
- Attachment 19 Study No. 5434 - Space Inquiry
- Attachment 20 Study No. 5416 - Nonrecurring Costs (ENRC)
- Attachment 21 South Dakota AT&T Arbitration Prices
- Attachment 22 South Dakota SGAT TELRIC Study Prices

The electronic version of the Attachments, which is found on the enclosed compact discs includes the following cost models

- Collocation
- HiCap
- ICM
- LIDB
- NAC & Dark Fiber
- Nonrecurring Cost Program
- OCN Interconnection NAC for E-UDIT
- Wholesale Cost Program

The compact disc also includes user instructions for these models

None of the enclosed studies and models are deemed confidential pursuant to the Commission's rules. However, Attachment 15, (ICNAM) contains vendor proprietary information that is password protected. Persons wanting to access the vendor proprietary information will need to execute an appropriate protective agreement. Qwest will then have to obtain the permission of the affected vendor(s) before releasing the data.

Sincerely yours,

Cynthia J. Pierson

Cynthia J. Pierson
Qwest Corporation
Enclosures

Cc: Tom Welk
Mary Hobson
Larry Toll
Jon Lehner
Colleen Sevold

TC01-098
RECEIVED
JUL 27 2001
SOUTH DAKOTA PUBLIC UTILITIES COMMISSION

BEFORE THE PUBLIC UTILITIES COMMISSION
OF THE STATE OF SOUTH DAKOTA

IN THE MATTER OF DETERMINING PRICES FOR UNBUNDLED NETWORK ELEMENTS (UNEs) IN QWEST CORPORATION'S STATEMENT OF GENERALLY AVAILABLE TERMS (SGAT)	TC 01-_____ PETITION OF QWEST CORPORATION FOR INITIATION OF COST DOCKET

Qwest Corporation ("Qwest"), formerly U S WEST Communications, Inc., files this petition seeking an order of the Public Utilities Commission of the State of South Dakota ("Commission") initiating a docket for the purpose of determining Qwest's forward looking costs to be used in setting the prices for the elements and services contained in Qwest's Statement of Generally Available Terms ("SGAT") and setting a scheduling conference for the purpose of adopting a procedural schedule for the orderly progression of this matter.[1]

Cost Studies

Accompanying this petition and attached hereto as Attachments 1 through 20 are Qwest's most recent South Dakota - specific total element long run incremental cost ("TELRIC") studies for those Unbundled Network Elements ("UNEs") offered in Qwest's SGAT[2]. Attachments 21 and 22 depict existing and certain proposed price information for Qwest's offerings in South Dakota. Attachment 21 contains those prices established by this Commission in *In the Matter of*

[1] The Commission opened a cost docket for purposes of establishing permanent prices are terms arising from the AT&T Arbitration (Docket No. TC96-184). The proceeding requested by this petition will render such docket moot.

[2] On November 22, 2000 Qwest filed a version of its SGAT with the Commission. By Order dated January 26, 2001, the Commission allowed the SGAT to go into effect subject to future approval or disapproval by the Commission. TC00-191. Since that time in response to orders issued by the Federal Communications Commission, to requests of Competitive Local Exchange Carriers (CLECs), and as a result of workshops and similar proceedings in other jurisdictions, Qwest has repeatedly modified its SGAT in those jurisdictions. In many cases the UNE cost elements and offerings reflected in Qwest's cost studies relate to UNEs and services as described in revised SGAT language. These facts are not central to the cost issues and Qwest does not expect the fact that the SGAT has undergone modification to cause confusion or difficulty in this docket because of the general industry familiarity with the evolution of the UNEs. Qwest will update its SGAT on file in with this Commission at later time and in appropriate proceeding.

the Interconnection Contract Negotiations Between AT&T Communications of the Midwest, Inc. and U S WEST Communications, Inc. Pursuant to 47 U.S.C. Section 251 (Docket No. TC96-184)("AT&T Arbitration"). Attachment 22 contains a complete list of all of the UNEs and services offered to wholesale customers by Qwest with the prices that are derived from the cost studies and materials contained in Attachments 1 to 20. It should be noted that since the completion of the AT&T Arbitration there have been a large number of new UNEs and other service configurations created for use by Qwest wholesale customers. Attachment 22 depicts prices for these new UNEs and configurations as well as for those products and services previously addressed by this Commission.

Finally, for the convenience of the Commission, Qwest submits its cost models, which include Collocation, HiCap, Integrated Cost Model (ICM), Lidb, NAC and Dark Fiber, Nonrecurring Cost Program, OCN Interconnection NAC for E-UDIT and Wholesale Cost Program, together with user instructions in compact disc format. Qwest will provide additional compact discs upon request.

Existing Prices

In offering the most current South Dakota-specific cost support for all of the products and services depicted on Attachment 22, Qwest is not generally seeking changes to those prices already established by this Commission in the AT&T Arbitration. To the contrary, Qwest recommends that this Commission declare those previously established prices to be Qwest's permanent TELRIC-based wholesale prices. Qwest makes this recommendation to facilitate speedy resolution of all wholesale pricing issues in this jurisdiction. This is the case despite the fact that a the comparison of Attachments 21 and 22 reveals the current cost studies and supporting information would, in many cases, support higher prices for those products and

services. With the exception of collocation rates where Qwest supports its cost study rates, in those cases where the cost studies produce lower rates for an element Qwest recommends that the lower rate be adopted by the Commission as its permanent TELRIC rate. For example, "Interconnection Tie Pairs" have lower rates with Qwest's cost studies than the AT&T Arbitration rates. So Qwest would propose that those rates be adopted. However, this principle would not apply when a given element has numerous cost components. This is because the cost of one component is frequently dependent on the cost calculation of the other component. For instance, "Basic Loop installation" is lower in Qwest's cost studies for the first loop installed ($89.94) compared to the AT&T Arbitrated rates ($106.29), but the cost of each additional loop is higher with the cost studies ($74.95) than the arbitrated rates ($54.44). In calculating these rates, the cost for the second loop is based in part on the allocation of the joint cost to the first loop. In this case, the rates need to be adopted as a set with the first line and each additional line adopted together. The element groups that "go together" can be identified by the price list number designation, for example, 9.2.4.1.

For those services that were not addressed in previous pricing decisions of this Commission, Qwest offers its cost studies and supporting materials in support of the prices depicted on Attachment 22.

OSS Cost Recovery

Qwest will not seek cost recovery for its Operations Support Systems (OSS) until testing of said systems has been successfully completed.[3] To the extent that OSS cost recovery cannot be addressed under the schedule adopted by this Commission without undue hardship to the

[3] This statement is subject to certain exceptions for discrete portions of the OSS costs incurred in connection with particular products and services. These limited exceptions will be highlighted and explained by Qwest as this proceeding progresses.

parties and delay to these proceedings, Qwest will seek recovery of those costs in a later proceeding.

Recommended Process

In an effort to allow the Commission, the Staff and any other interested parties to familiarize themselves with the mechanisms and issues that have been the subject of similar proceedings in other jurisdictions, Qwest proposes that the Commission first initiate a series of informal workshops to precede the preparation and filing of more formal positions. At these workshops Qwest will explain and, if requested, provide "hands-on" assistance for the use of its Integrated Cost Model ("ICM") and other cost models. In addition, Qwest will provide information about the inputs used to produce its results, show the effect of using alternative inputs and, if there is interest, provide information about the models and inputs used, and the results adopted in other jurisdictions. Specifically if no other party offers an alternative cost model, and if requested, Qwest will provide results from the HAI model, where such results are available, for comparison purposes.

This approach has been recently adopted by the Idaho Public Utilities Commission. The Idaho Commission Staff supported this approach because it gave all interested parties the opportunity to conduct discovery and to familiarize themselves, on an informal basis, with the issues, the cost models, and the UNE prices established in other Qwest jurisdictions. The Idaho Staff felt this approach offered advantages over a more formal proceeding in the context in which its own resources are limited and it is uncertain as to the extent of participation of intervenors with extensive cost docket experience in the Idaho docket. Qwest suggests similar circumstances may also prevail in South Dakota at this time.

Qwest believes that this proposed approach will ultimately expedite these proceedings in that it will provide extensive informal discovery and will eliminate much of the mystery of selecting one cost model over its competitors. In addition, Qwest believes that these workshops will provide the foundation not only for greater understanding of the cost models and cost issues but will also provide a valuable forum for the identification and possible stipulated resolution of those issues that are of significance to South Dakota competitive local exchange carriers and other participating parties.

Qwest is prepared to provide suggestions for the subject matter to be discussed at a series of workshops. Among the topics that should be considered is the willingness of interested parties to agree to accept the prices established in the AT&T arbitration in lieu of formal reconsideration of these prices in the current docket. Agreement on this point will greatly reduce the time and resources to be spent in this docket by all parties and by the Commission. For the most part, however, the content of the workshops should be driven by the needs of the Commission, Staff and participating parties. Qwest is willing to work with the Commission in scheduling the number and type of workshops that serve the needs of the participants in this docket.

Following the workshop phase, Qwest then proposes that the case move to a more formal schedule that provides for direct and rebuttal testimony and an evidentiary hearing on those issues remaining after the informal workshop process is completed.

Qwest submits that this recommended approach will afford all parties adequate opportunity to fully understand the Qwest advocacy and how it relates to the orders entered in other Qwest jurisdictions as well as to prepare a thorough and orderly presentation of their respective positions.

Based upon the foregoing, Qwest respectfully requests the Commission initiate a cost docket and set a scheduling conference for purposes of establishing a timeline for the "workshop" and formal phases of this case, thereby providing a roadmap for the completion of the task of developing TELRIC-based prices for all of the UNEs provided in Qwest's SGAT.

Dated this 26th day of July, 2001.

Thomas J. Welk
Boyce, Murphy, McDowell & Greenfield LLP
PO Box 5015
Sioux Falls, South Dakota 57117
Telephone: (605) 336-2424
FAX: (605) 334-0618

Mary S. Hobson
Stoel Rives LLP
101 S. Capitol Boulevard, Suite 1900
Boise, ID 83702-5958
Telephone: (208) 387-4277
FAX: (208) 389-9040

Attorneys for Qwest Corporation

South Dakota Public Utilities Commission
Docket No. TC 01_____
Qwest Corporation

Attachment 1

Study No. 5393
Integrated Cost Model (ICM)

Study ID #5393

Qwest Defaults 7/20/01 10:04:18 AM

South Dakota

Qwest

Integrated Cost Model Interconnection TELRIC Results

2001 Recurring Cost Study

Market Services &
MSEA
Economic Analysis

Table of Contents

Subject	Page
Summary - Interconnection TELRIC Summary of Recurring Costs	
Section A - Unbundled Loop	
Development of Total Product Costs	1
Investment Cost Calculation	5
Zone and Office Specific Loop Costs	9
Defaults and Overrides	16
Investment Development	18
Investment Module Outputs	22
Section B - Extension Technology	
Development of Total Product Costs	1
Investment Cost Calculation	2
Investment Development	3
Investment Module Outputs	7
Section C - Line and Trunk Ports	
Development of Total Product Costs	1
Investment Cost Calculation	2
Investment and Expense Development	4
Investment Module Outputs	14
Defaults and Overrides	15
Section D - Local and Usage	
Development of Total Product Costs	1
Investment Cost Calculation	3
Defaults and Overrides	6
Investment and Expense Development	8
Investment Module Outputs	11
Hold Times	14
Section E - Entrance Facilities and Direct Trunked Transport	
Development of Total Product Costs	1
Investment Cost Calculation	4
Defaults and Overrides	12
Investment Module Outputs	14
Section F - Intentionally Left Blank	

Section G - 8XX Database Services
Development of Total Product Costs 1
Investment Cost Calculation 2
Investment and Expense Inputs 3

Section H - Line Information Database
Development of Total Product Costs 1
Investment Cost Calculation 2
Investment and Expense Inputs 3

Section I - Signaling
Development of Total Product Costs 1
Investment Cost Calculation 2
Investment and Expense Inputs 4

Section J - Shared Transport
Development of Total Product Costs 1
Investment Cost Calculation 3
Defaults and Overrides 4
Investment Development 5
Expense Development 8
Investment Module Outputs 9

Section K - Unbundled Dedicated Interoffice Transport (UDIT)
Development of Total Product Costs 1
Investment Cost Calculation 8
Defaults and Overrides 21
Investment Module Outputs 22

Appendix - Factors, Investment Loadings and ICM Inputs
Expense Factors 1
Investment Based Factors 3
Billing 10
Land & Building Factors 12
Investment Loadings 13
ICM Run Data 15

Summary of Results

Qwest Defaults 7/20/01 10:04:18 AM — ICM Version 2.2

Recurring Costs
South Dakota

Cost Element	Investment	TELRIC	Common	TELRIC + Common
Section A - Unbundled Loop				
2 Wire				
Unbundled Loop (2 Wire) Statewide Average	1456.25	29.57	1.34	**30.90**
Unbundled Loop (2 Wire) Zone 1	901.53	21.13	1.34	**22.47**
Unbundled Loop (2 Wire) Zone 2	1292.79	27.20	1.34	**28.53**
Unbundled Loop (2 Wire) Zone 3	1859.62	35.65	1.34	**36.99**
4 Wire				
Unbundled Loop (4 Wire) Statewide Average	2912.50	59.11	2.67	**61.78**
Unbundled Loop (4 Wire) Zone 1	1803.05	42.24	2.67	**44.91**
Unbundled Loop (4 Wire) Zone 2	2585.58	54.37	2.67	**57.04**
Unbundled Loop (4 Wire) Zone 3	3719.25	71.29	2.67	**73.96**
Unbundled Loop Grooming				
Unbundled Loop Grooming (2 Wire)	67.31	1.40	0.06	**1.46**
Unbundled Loop Grooming (4 Wire)	158.01	3.25	0.15	**3.40**
Network Interface Device (NID)				
Network Interface Device (2 Wire) Statewide Average	44.98	0.99	0.04	**1.04**
Section B - Extension Technology				
2-Wire Extension Technology	191.04	3.92	0.18	**4.10**
2-Wire Extension Technology - Unbundled Loop Grooming	92.18	2.10	0.09	**2.20**
Section C - Line and Trunk Ports				
DS0 Analog Line Port	55.2346	1.1956	0.0540	**1.2496**
Each Addditional DS0 Analog Line Port	55.2346	1.1956	0.0540	**1.2496**
DS0 Trunk Port	842.2932	17.9317	0.8100	**18.7416**
DS1 Trunk Port	3598.3765	76.5371	3.4571	**79.9942**
ISDN BRI Port	644.8095	15.1082	0.6824	**15.7906**
ISDN PRI Port	10131.3938	215.6643	9.7414	**225.4057**
DID/PBX Trunk Port per DS0	187.2116	4.0013	0.1807	**4.1820**
Section D - Local Usage				
Local Switching UNE per Minute of Use	0.0125184	0.0035818	0.0001618	**0.003744**
Tandem Switching UNE per Minute of Use	0.0107881	0.0031197	0.0001409	**0.003261**
Local Switching LIS per Minute of Use	0.0073032	0.0023102	0.0001043	**0.002415**
Tandem Switching LIS per Minute of Use	0.0080809	0.0020554	0.0000928	**0.002148**
Tandem Switched Local Transport				
Fixed per Minute of Use 0 to 8 Miles	0.0021119	0.0005714	0.0000258	**0.000597**
Fixed per Minute of Use 8 to 25 Miles	0.0022735	0.0006151	0.0000278	**0.000643**
Fixed per Minute of Use 25 to 50 Miles	0.0022643	0.0006126	0.0000277	**0.000640**
Fixed per Minute of Use Over 50 Miles	0.0020630	0.0005582	0.0000252	**0.000583**
Distance Sensitive per Minute of Use per Mile from 0 to 8 miles	0.0004114	0.0000898	0.0000041	**0.0000939**
Distance Sensitive per Minute of Use per Mile from 8 to 25 miles	0.0002007	0.0000407	0.0000018	**0.0000425**
Distance Sensitive per Minute of Use per Mile from 25 to 50 miles	0.0001080	0.0000222	0.0000010	**0.0000232**
Distance Sensitive per Minute of Use per Mile over 50 miles	0.0000299	0.0000062	0.0000003	**0.0000065**

Qwest Defaults 7/20/01 10:04:18 AM — ICM Version 2.2

Recurring Costs
South Dakota

Cost Element	Investment	TELRIC	Common	TELRIC + Common
Section E - Entrance Facilities and Direct Trunked Transport				
Entrance Facilities				
DS1 Entrance Facility	4320.07	86.57	3.91	**90.48**
DS3 Entrance Facility	22826.04	453.79	20.50	**474.29**
Multiplexing				
Multiplexing DS3 to DS1	11892.42	243.93	11.02	**254.95**
Multiplexing DS1 to DS0	11204.03	229.81	10.38	**240.19**
DS1 Direct Trunked Transport				
Over 0 to 8 Miles, Fixed	1587.92	35.96	1.62	**37.58**
Over 0 to 8 Miles, Per Air Mile	199.66	3.45	0.16	**3.61**
Over 8 to 25 Miles, Fixed	1624.20	36.78	1.66	**38.44**
Over 8 to 25 Miles, Per Air Mile	202.47	3.44	0.16	**3.59**
Over 25 to 50 Miles, Fixed	1705.48	38.62	1.74	**40.36**
Over 25 to 50 Miles, Per Air Mile	112.57	1.93	0.09	**2.02**
Over 50 Miles, Fixed	1646.35	37.28	1.68	**38.97**
Over 50 Miles, Per Air Mile	47.87	0.83	0.04	**0.87**
DS3 Direct Trunked Transport				
Over 0 to 8 Miles, Fixed	10410.29	235.51	10.64	**246.15**
Over 0 to 8 Miles, Per Air Mile	3386.25	58.32	2.63	**60.96**
Over 8 to 25 Miles, Fixed	10559.58	238.89	10.79	**249.68**
Over 8 to 25 Miles, Per Air Mile	1146.15	18.15	0.82	**18.97**
Over 25 to 50 Miles, Fixed	9767.73	220.98	9.98	**230.96**
Over 25 to 50 Miles, Per Air Mile	1312.41	22.90	1.03	**23.93**
Over 50 Miles, Fixed	10280.58	232.58	10.51	**243.08**
Over 50 Miles, Per Air Mile	893.29	15.77	0.71	**16.48**
Section F - Intentionally Left Blank				
Section G - 8XX Database Services				
Basic Query	0.00154445	0.01859099	0.00083974	**0.01943073**
Call Handling and Destination	0.00000619	0.00000158	0.00000007	**0.00000165**
POTS Translation	0.00000206	0.00000053	0.00000002	**0.00000055**
Section H - Line Information Database				
LIDB per Query	0.0017113	0.0008111	0.0000366	**0.0008477**
Section I - Signaling				
TCAP Signal Transport	0.000081	0.0000205	0.0000009	**0.0000215**
TCAP Signal Switching	0.002128	0.0007989	0.0000361	**0.0008350**
ISUP Signal Formulation	0.002270	0.0005792	0.0000262	**0.0006053**
ISUP Signal Transport	0.000711	0.0001853	0.0000084	**0.0001937**
ISUP Signal Switching	0.002760	0.0009602	0.0000434	**0.0010036**
STP Port	11166.44	237.44	10.73	**248.17**
Section J - Shared Transport				
Shared Transport per MOU	0.005782	0.001802	0.000081	**0.001883**
Section K - Unbundled Dedicated Interoffice Transport (UDIT)				
Multiplexing				
Multiplexing DS3 to DS1	11892.42	243.93	11.02	**254.95**

Summary of Results

Qwest Defaults 7/20/01 10:04:18 AM — **ICM Version 2.2**

Recurring Costs
South Dakota

Cost Element	Investment	TELRIC	Common	TELRIC + Common
Multiplexing DS1 to DS0	11204.03	229.81	10.38	**240.19**
DS0 UDIT				
Over 0 to 8 Miles, Fixed	1073.12	24.31	1.10	**25.41**
Over 0 to 8 Miles, Per Air Mile	34.01	0.58	0.03	**0.61**
Over 8 to 25 Miles, Fixed	1083.27	24.54	1.11	**25.65**
Over 8 to 25 Miles, Per Air Mile	25.24	0.43	0.02	**0.45**
Over 25 to 50 Miles, Fixed	1083.37	24.54	1.11	**25.65**
Over 25 to 50 Miles, Per Air Mile	10.64	0.18	0.01	**0.19**
Over 50 Miles, Fixed	1076.36	24.39	1.10	**25.49**
Over 50 Miles, Per Air Mile	3.39	0.06	0.00	**0.06**
DS1 UDIT				
Over 0 to 8 Miles, Fixed	1587.92	35.96	1.62	**37.58**
Over 0 to 8 Miles, Per Air Mile	199.66	3.45	0.16	**3.61**
Over 8 to 25 Miles, Fixed	1624.20	36.78	1.66	**38.44**
Over 8 to 25 Miles, Per Air Mile	202.47	3.44	0.16	**3.59**
Over 25 to 50 Miles, Fixed	1705.48	38.62	1.74	**40.36**
Over 25 to 50 Miles, Per Air Mile	112.57	1.93	0.09	**2.02**
Over 50 Miles, Fixed	1646.35	37.28	1.68	**38.97**
Over 50 Miles, Per Air Mile	47.87	0.83	0.04	**0.87**
DS3 UDIT				
Over 0 to 8 Miles, Fixed	10410.29	235.51	10.64	**246.15**
Over 0 to 8 Miles, Per Air Mile	3386.25	58.32	2.63	**60.96**
Over 8 to 25 Miles, Fixed	10559.58	238.89	10.79	**249.68**
Over 8 to 25 Miles, Per Air Mile	1146.15	18.15	0.82	**18.97**
Over 25 to 50 Miles, Fixed	9767.73	220.98	9.98	**230.96**
Over 25 to 50 Miles, Per Air Mile	1312.41	22.90	1.03	**23.93**
Over 50 Miles, Fixed	10280.58	232.58	10.51	**243.08**
Over 50 Miles, Per Air Mile	893.29	15.77	0.71	**16.48**
OC3 UDIT				
Over 0 to 8 Miles, Fixed	33571.53	759.27	34.30	**793.57**
Over 0 to 8 Miles, Per Air Mile	11183.55	202.98	9.17	**212.15**
Over 8 to 25 Miles, Fixed	33810.71	764.68	34.54	**799.22**
Over 8 to 25 Miles, Per Air Mile	4010.38	64.72	2.92	**67.64**
Over 25 to 50 Miles, Fixed	32496.10	734.95	33.20	**768.14**
Over 25 to 50 Miles, Per Air Mile	4713.67	84.44	3.81	**88.26**
Over 50 Miles, Fixed	33330.05	753.81	34.05	**787.86**
Over 50 Miles, Per Air Mile	3333.94	58.88	2.66	**61.54**
OC12 UDIT				
Over 0 to 8 Miles, Fixed	93648.28	2117.98	95.67	**2213.65**
Over 0 to 8 Miles, Per Air Mile	5544.31	88.65	4.00	**92.66**
Over 8 to 25 Miles, Fixed	93648.28	2117.98	95.67	**2213.65**
Over 8 to 25 Miles, Per Air Mile	5858.18	90.10	4.07	**94.17**
Over 25 to 50 Miles, Fixed	93648.28	2117.98	95.67	**2213.65**
Over 25 to 50 Miles, Per Air Mile	6004.30	100.52	4.54	**105.06**
Over 50 Miles, Fixed	93648.28	2117.98	95.67	**2213.65**
Over 50 Miles, Per Air Mile	6789.69	118.27	5.34	**123.61**
OC48 UDIT				
Over 0 to 8 Miles, Fixed	308887.73	6985.90	315.55	**7301.45**
Over 0 to 8 Miles, Per Air Mile	18481.03	295.51	13.35	**308.86**
Over 8 to 25 Miles, Fixed	308887.73	6985.90	315.55	**7301.45**

Summary of Results

Qwest Defaults 7/20/01 10:04:18 AM — **ICM Version 2.2**

Recurring Costs
South Dakota

Cost Element	Investment	TELRIC	Common	TELRIC + Common
Over 8 to 25 Miles, Per Air Mile	19561.03	301.06	13.60	**314.66**
Over 25 to 50 Miles, Fixed	308887.73	6985.90	315.55	**7301.45**
Over 25 to 50 Miles, Per Air Mile	21171.88	361.24	16.32	**377.55**
Over 50 Miles, Fixed	308887.73	6985.90	315.55	**7301.45**
Over 50 Miles, Per Air Mile	25278.47	454.08	20.51	**474.59**
E-UDIT				
DS1 E-UDIT	4320.07	86.57	3.91	**90.48**
DS3 E-UDIT	22826.04	453.79	20.50	**474.29**
OC3 E-UDIT Central Office Node	45080.93	815.57	36.84	**852.41**
OC12 E-UDIT Central Office Node	65769.81	1239.09	55.97	**1295.06**
OC48 E-UDIT Central Office Node	162846.36	3226.34	145.73	**3372.07**
OC3 E-UDIT Remote Node	23652.02	488.46	22.06	**510.52**
OC12 E-UDIT Remote Node	46351.98	957.25	43.24	**1000.49**
OC48 E-UDIT Remote Node	145504.18	3004.93	135.73	**3140.66**

Summary of Results

Cell: A2
Comment: Results are from the Develop Total Product Costs Spreadsheets which are the first pages in each section.

Cell: A6
Comment: Section A - UNBUNDLED LOOP

Description

Unbundled Loops establish a transmission path between the Qwest distribution frame (or equivalent) and the network interface (NI) of the Competitive Local Exchange Carrier's (CLEC) end user. Unbundled loop is available in either a two-wire or four-wire configuration. The actual loop facilities that provide the service may utilize various technologies.

The investments in Unbundled Loops are calculated on a statewide average basis and on a de-averaged basis in up to five zones. Zones are calculated on a MSA (wire center) basis or on the basis of distance from the wire center. *Investments are also* separated into Feeder, Distribution and Network Interface Device (NID). NID is only on a statewide average basis.

Investment Development

Feeder

Feeder is the main cable leaving the central office, extending to the point where distribution facilities are interconnected. LoopMod builds facilities from the most distant location in each quadrant back to central office, adding demand along the route. The data includes the line demand at the SAI (also sometimes referred to as a Feeder Distribution Interface or FDI), the sub-feeder or lateral length and the main feeder length. At each taper point the line demand is incremented to show total demand used for cable sizing. In addition the distance at each location is used in determining the technology and placement methodology that will be utilized. If the technology used is fiber based DLC, the demand is shown as number of fibers required to support the DLC remote terminals. If the technology selection is copper cable, the demand is shown as copper pairs required. The engineering fill factor is applied to this demand to determine the copper cable size or to determine the DLC size the program will utilize.

Distribution

Distribution is the cable that connects with the feeder and extends the loop to a termination point (i.e., pole or pedestal) near a home or workplace. Distribution is modeled differently than feeder. Generic distribution designs are specified for a range of neighborhoods and business districts, based on the density of access lines. The average investment by component for each design is multiplied by the design percents to produce a distribution investment for each kilofoot of loop length within each wire center group.

The Distribution Group designs are adjusted in LoopMod V2.0 to reflect the density differences that occur DA to DA. Information about each DA is matched against density and building entrance terminal rules to map each DA to the appropriate DG design. The lot oriented designs (DG3, DG4 & DG5) are then adjusted based on a cable multiplier that reflects the difference between the standard design lot frontage and the frontage calculated for each individual DA.

Network Interface Device (NID) Costs are included in the Distribution costs. NID cost is also calculated separately for sell as a separate UNE when the customer does not purchase distribution.

Drop

The service wire or drop is a two to six pair facility that extends from the NID to the terminal on the distribution cable. The terminal contains a connecting block with lugs for terminating the drop wires. *Where demand exceeds a certain level, entrance* cables, not drops, are used and are terminated on building terminals. The costs for drop are included in the distribution costs.

Network Interface Device (NID)

The NID provides electrical protection and a point of interface between the drop or building entrance cable and the customers' inside wire. The NID may be housed in a small case on the side of residence or business, or it may be in a larger outside wall mounted building terminal for apartment buildings or small office buildings. In high density situations the NID would likely be associated with a terminal in the building basement or equipment closet.

Loop Grooming

The demultiplexing of unbundled loops on integrated digital loop carrier (DLC) uses two options. The first is based on a scenario involving TR-303 DLC in which the unbundled loops are pre-assigned to particular DS1s. These DS1s are routed from the DLC CO multiplexer through a DSX to a Universal DLC COT to demultiplex to a DS0 level and connect to a Main Distribution Frame. *The second scenario option assumes a TR-008 DLC with all DS1s passing through the UDLC to groom out the unbundled DS0s* and connect them to a Main Distribution Frame. Both options use a Litespan 2000 UDLC COT.

Billing and Collections

Summary of Results

Per line Billing and Collections investments and direct expenses are calculated in a separate study and are input to the QwestICM model.
All Loop costs include Billing and Collections.

Cell: A30
Comment: Section B - EXTENSION TECHNOLOGY
Description
2 Wire Extension Technology for Integrated Services Digital Network (ISDN) Basic Rate Interface (BRI) is an unbundled element which extends the ISDN BRI signal when the Competitive Local Exchange Carrier's (CLEC's) end user's unbundled loop has more than 40 decibels in loss measured at 40 kHz (based upon 2 Binary 1 Quantinary (2B1Q) line encoding), or the distance is beyond approximately 18 kilofeet between the Company's distribution frame (or equivalent) and the Network Interface (NI) of the Competitive Local Exchange Carrier's (CLEC) end user, where facilities are available.

Investment Development

Unbundled loop investments were obtained from the RLCAP cost model. The model was run twice, once at 100 percent pair gain with POTS and once at 100 percent ISDN with pair gain. The difference between the two sets of investments is the loop investment associated with 2-Wire Extension Technology for ISDN BRI Service.

In order to hand off the ISDN BRS line at a DS0 level, two additional DACS channels, two additional AD4 channel bank channels and one D4 BRITE card are required. The investments associated with this additional equipment are calculated in the Extension Technology cost study via a spreadsheet named DEMUXBRI.XLS.

The incremental loop investment and the investments for the additional equipment are added together to produce the total investment for Extension Technology.

Cell: A35
Comment: Section C - Line Ports
ANALOG LINE PORT
Description
Analog Line Port provides for the interconnection of individual loops to the switching components of the QWEST network. Ports provide access to the basic functionality of the switch, including signaling digit reception and translations, routing and rating, call supervision as well as access to interoffice services. An analog end office port is a two-wire, POTS type line side switch connection.

Cost Methodology
A monthly End Office Port cost is the cost associated with connecting a CLEC line to a QWEST end office switch. The line is assumed to be a copper DS0 pair - not an ISDN line nor a TR-303 or TR-008 integrated line, which has been traditionally referred to as a digital line. It is assumed to be connected to an analog line unit. This cost element is the NTS COE in the switch itself and the associated use of an OE (office equipment) block on the MDF. The labor to cross connect the OE block to the Tie Pair block which terminates the Expanded Interconnect Channel Termination (EICT) is not included in this rate element.

The methodology was to take the Investment per Analog Line and the Investment per MDF OSP Pair from the Switch Module. Because the Investment per Analog Line includes both the MDF OE block and the MDF OSP block, the OSP block investment was removed by subtracting the Investment per MDF OSP Pair from the Investment per Analog Line. Because the cost for the MDF is only broken down for the 5ESS and DMS host switches, the weighted average Investment per MDF OSP Pair for these two switches was subtracted from the weighted average Investment per Analog Line for all switches.

The following switches were eliminated from the statewide average: switches that had no analog lines - e.g., hosts without any lines directly connected to the host or remote switches that were ISDN only.

Cell: A37
Comment: DS0 Trunk Port
DESCRIPTION
The DS0 analog trunk port connects the co-provider to a metallic interface at the common ICDF (or equivalent) in a Qwest central office. The interfaces support a 2-wire or a 4-wire transmission.
STUDY METHODOLOGY

Summary of Results

DS0 ANALOG TRUNK Port investment was developed by dividing the DS1 Trunk Port in the Switch Usage Model (SUM) by 24 channels. Then adding the DS1 – DS0 multiplexing investment divided by 24 channels. The sum of the two was divided by the utilization factor.
Billing and collections are also part of this study.

Cell: A38
Comment: DS1 Trunk Port
DESCRIPTION
A DS1 Trunk Port is an unbundled switching product that provides a Co-Provider 4-wire DS1 metallic interface at the common ICDF (or equivalent) within the Qwest central office. The DS1 unbundled trunk port supports up to 24 DS0 channelized trunks. This DS1 trunk port does not provide ISDN PRI capabilities.

STUDY METHODOLOGY
The DS1 Trunk Port investment was developed in the Switch Model (SM).

Billing and collections are also part of this study.

Cell: A39
Comment: BRI ISDN Port
DESCRIPTION
Basic Rate Interface Integrated Services Digital Network (BRI ISDN) is a digital architecture that provides integrated voice and data capability. The Unbundled BRI- ISDN Digital Line Port provides access for the interconnection of the individual loops to the switching components of the USW BRI ISDN network for access to voice, data, image and facsimile functionality. The serving arrangement conforms to the internationally developed, published and recognized standards generated by International Telegraph and Telephone Union (formerly CCITT).

An Unbundled BRI – ISDN Digital Line Port is a digital 2B+D (2 bearer channels for voice or data and 1 delta channel for signaling and D channel packet) line side switch connection with BRI ISDN voice and data basic elements. The Unbundled BRI – ISDN Digital Line Port has interLATA and intraLATA (where available) carrier choice, access to 911 and USW operator services.

The BRI – ISDN Port includes the following:
Non-traffic Sensitive Central Office Equipment
Software Right to Use
Traffic Sensitive – Originating BRI
Traffic Sensitive – Terminating BRI
Standard Features
D – Channel Packet x.75 Link
Billing and Collections

The standard feature list includes:
2B+D
Primary Directory Numbers (2)
Call Appearances (2)
Normal Ringing
Caller ID Number Blocking per line

Any additional features available in the switch requested by the customer will be handled on an ICB basis.

STUDY METHODOLOGY
Central office switching feature costs are calculated by first determining incremental switching feature investments. These feature investments are obtained through the use Switching Module (SM) for digital stored program controlled central offices. The switch investments include processor time, memory and hardware appropriate for each feature. Feature utilization data pertaining to each type of feature is input into SM to develop an incremental Engineered, Furnished and Installed (EF&I) feature investment. SM input data is projected by using historical traffic data and best estimates of feature utilization. The switch investments are at a 2000 level.

DACs Port and ISDN end office equipment port and Digipac Port investments are calculated by loading vendor-installed price with power, sales tax (where applicable), land and building, and interest during construction. Link investment between end office and ISDN DAC and between DACs is calculated by the Transport Module (TM). Link investments are added to DACs Port and ISDN End Office equipment and Digipac Port investments and averaged over the number of forecasted ISDN lines.

RTU fees include RTU buy out cost which is averaged over all forecasted and actual Qwest ISDN lines in the 14 state area and additional fees paid per BRI ISDN port by switch type. These fees are added together and levelized over 16.5 years.

Billing and collections are also part of this study.

The investments are converted to monthly costs using monthly cost factors. Factors are represented as investment based and expense based.

Cell: A40
Comment: ISDN PRI Port
DESCRIPTION
Primary Rate Interface Digital ISDN trunk port is a switch termination supporting PRI ISDN functionality. PRI trunk port requires a digital four wire full duplex transmission path between ISDN compatible Customer Premises Equipment (CPE) and a PRI ISDN equipped central office.

The PRI central office equipped trunk port is a DS1 which provides 24 64 Kb/s channels. This product is dedicated call type of PRI with a maximum of 23 possible B channels. The 24th channel must be configured as a D channel, which will carry the signaling and control information. The B channels transmit voice and data.

The PRI – ISDN Port includes the following:
Software Right to Use
Standard Features
Billing and Collections

The standard feature list includes:
23B+D
Direct Inward Dialing (DID)
Direct Outward Dialing (DOD)
Calling Number Identification
Calling Number Identification Blocking – All Calls
Circuit Switched Data

Any additional features available in the switch requested by the customer will be handled on an ICB basis.

STUDY METHODOLOGY
These direct costs occur as a result of providing a PRI ISDN Port.

Central office switching feature costs are calculated by first determining incremental switching feature investments. These feature investments are obtained through the use of the Switch. The switch investments include processor time, memory and hardware appropriate for each feature. Feature utilization data pertaining to each type of feature is input into SM to develop an incremental Engineered, Furnished and Installed (EF&I) feature investment. SM input data is projected by using historical traffic data and best estimates of feature utilization. The switch investments are at a 2000 level.

Billing and collections are also part of this study.

Cell: A41
Comment: DID/PBX Trunk Port
DESCRIPTION OF SERVICE
The DID/PBX Trunk Port is an unbundled switching product that provides a Co- Provider the ability to connect a PBX (Private Branch Exchange) user utilizing the DID (Direct Inward Dialing) functionality to a Qwest DID capable central office.

DID is a special trunking arrangement that permits incoming calls from the exchange network to reach a specific PBX station directly without attendant assistance. DID service is offered with an analog or digital 2-way. If digital, the individual DSO's are 2-way trunks using advanced service that required DID ports. This product allows the Co-Provider to order DID numbers in blocks of 20. Provisioning of the DID feature requires that the Co-Provider subscribe to a sufficient number of trunk ports to adequately handle the volume of incoming calls.

Additional line or trunk features not offered with the basic DID/PBX product, are available to the Co-Provider on an individual case basis. A subsequent order charge will apply to add or change features.

Summary of Results

Usage costs are not included in the cost of the DID/PBX Trunk Port. Further, non-recurring charges for the port, first trunk ordered and each additional trunk apply. In addition, recurring and non-recurring charges apply to each DID feature.

STUDY METHODOLOGY: RECURRING COSTS

The costs identified are direct costs that occur as a result of providing a DID/PBX trunk port service. As stated in section "B", above, the analysis studies the trunk termination costs to provide both analog and digital trunk terminations within the central office. The total analog and digital investments are identified separately. The investments are averaged together based relative demand for analog and digital trunks. Central office costs include digital serving wire center offices only.

Costs are included for the following cost components:

Multiplexing Costs: DID analog service requires a trunk side connection which requires DS0 to DS1 muxing to channelize the DS0 to the DS1 level. These investments are acquired from the DS1 Private Line Transport Service Cost Study. Investments associated with multiplexing equipment are acquired from QWEST Network Engineering.

Main Distributing Frame Costs (MDF): The MDF portion of the central office costs include the equipment used in making the loop plant connections at the central office. Included in this cost are the "tip" or riser cables, a portion of the main distributing frame, connecting blocks, protectors, and miscellaneous wiring.

DSX-1 Costs: The Digital Signal Cross Connect (DSX) frame serves as a standard cross connect frame for digital facilities terminating on the trunk side of the switch. Equipment that terminates at the DSX includes D-type banks, Digital Cross Connect Systems, (DCS), digital switches, and digital multiplexers.

Digital Line Trunk Unit (DLTU) Costs: The DLTU provides a direct interface between DS1 facilities and the switch.

Functionality & Processing Costs: DID Functionality & Processing for DID Trunks is part of a business service available to customers with PBX type equipment. DID Functionality & Processing allows incoming calls on digital one-way, analog two-way, analog one-way, and two-way digital primary channels for ISDN from the network to be routed directly to the appropriate station number without the assistance of an attendant. This analysis studies the trunk functionality & processing associated with a DID trunk at the central office.

Cell: A44
Comment: Section D Local Usage
Local switching UNE consists of:
1) Terminating Interoffice end office switching for one office.
2) Non-Chargable Intercept which includes limited mechanical announcements informing callers of new numbers, referral numbers and/or line status.
3) Billing and Collections which provides the billing mechanism for QWest to charge Competitive Local Exchange Carriers for use of the Qwest local network.
4) AMA measurement equipment which stores information regarding each call that is required for billing purposes.
5) End office measurement investment

Cell: A45
Comment: Tandem Switching UNE consists of:
1) This includes the usage sensitive cost of switching a call through a local tandem switch.
2) AMA measurement equipment which stores information regarding each call that is required for billing purposes.
3) Billing and Collections which provides the billing mechanism for Qwest to charge Competitive Local Exchange Carriers for use of the Qwest local network.

Cell: A46
Comment: Local switching LIS consists of:
1) Terminating Interoffice end office switching for one office.
2) Non-Chargable Intercept which includes limited mechanical announcements informing callers of new numbers, referral numbers and/or line status.
3) Billing and Collections which provides the billing mechanism for U S WEST to charge Competitive Local Exchange Carriers for use of the USWC local network.
4) Hewlett Packard measurement equipment which collects information regarding each call that is required for billing purposes.

Local Switching LIS does not include costs for SS7.

Cell: A47
Comment: Tandem Switching LIS consists of the usage sensitive cost of switching a call through a local tandem switch.

It does not inlude the cost of SS7.

Cell: A49
Comment: Tandem Switched Local Transport

Tandem Switched Local Transport provides the transmission path from the end office which originates a call through the local tandem switch to the end office which terminates the call. Tandem Switched Transport consists of two elements:

1) Fixed

This element identifies the usage sensitive costs associated with terminating interoffice facilities in end offices and tandem switches. These termination costs are stated on a per minute of use basis for each of the mileage bands.

2) Distance Sensitive

The costs identified in this element are also usage sensitive and are associated with the outside plant facilities and intermediate multiplexing equipment which is required to connect central offices and tandem switches in the Qwest network. The costs are different by mileage bands as the costs vary by the distances between the offices. Costs are stated on a per minute of use per mile basis.

Cell: A59
Comment: Section E - Entrance Facility and Direct Trunk Transport
Description
DS1 and DS3 Entrance Facility provides for the communications path between the CLEC's Point of Interface (POI) and the Qwest Serving Wire Center (SWC) of that POI for the sole use of the CLEC. The Entrance Facility includes the fiber facility and supporting structure, transmission and terminating equipment at the serving wire center and the CLEC's POI.

DS1 and DS3 Direct Trunk Transport: Direct Trunk Transport (DTT) provides the transmission path without utilizing tandem switching functions on circuits dedicated to the use of a single CLEC between:

- the CLEC's SWC and an end office, or
- the CLEC's SWC and a local tandem, or
- the CLEC's SWC and a Qwest Hub where multiplexing functions are performed, or
- a Qwest Hub and an end office, or
- a Qwest Hub and a local tandem.

Direct Trunk Transport consists of two elements; fixed and per mile costs. The fixed element contains the costs associated with the terminating equipment at both ends of the transmission path. The per mile costs contain the costs associated with cable, repeaters, and intermediate central office equipment. The fixed are expressed per DS1 or DS3 circuit and the per mile costs are expressed per DS1 or DS3 circuit, per airline mile.

DS3 to DS1 Multiplexing: Central Office Multiplexing includes the equipment necessary for an arrangement that converts a DS3 channel to twenty-eight DS1 (1.544 Mbps) channels utilizing time division multiplexing.

DS1 to DS0 Multiplexing: Central Office Multiplexing includes the equipment necessary for an arrangement that converts a DS1 channel to twenty-four DS0 channels utilizing time division multiplexing.

Investment Development

DS1 and DS3 Entrance Facility investments are calculated using a Microsoft Excel spreadsheet based model called the NAC (Network Access Channel) model. The NAC model estimates the forward looking installed investment associated with DS1 and DS3 circuits between a SWC and a CLEC's POI.

DS1 and DS3 Direct Trunk Transport

Summary of Results

The Interoffice Transport investments for DS1 and DS3 were calculated using the Transport Module (TM). TM calculates the weighted average installed investment required for transport over the Qwest interoffice network. A weighted average investment is obtained by weighting the investments for various forward looking interoffice facility configurations by a state specific probability of occurrence.

Multiplexing

The installed investments for the Central Office Multiplexing were calculated using an Excel spreadsheet based on the required equipment specified by Network Standard Configurations.

Qwest Cost Models Used

QwestICM
NAC
Transport Model

Cell: A90
Comment: Section G - 800 Database Service
DESCRIPTION OF SERVICE
800 Database Query Service is an originating service which provides for the forwarding of CLEC end-user-dialed 8XX-NXX-XXXX calls to a toll carrier, based on the dialed 8XX number. When an 8XX call is originated by a CLEC end user, the CLEC Service Switching Point (SSP) will send an 8XX query to the Qwest 8XX Service Control Point (SCP) through the Qwest Signaling Transfer Point (STP). The Qwest SCP will perform the Carrier Identification Function based on the dialed digits to determine the toll carrier trunk group to which the call should be routed in accordance with the SMS/800 information residing in the Qwest SCP. The SCP will transmit the results of the Carrier Identification Function back to the CLEC SSP through the Qwest STP/Access Tandem. The results of the Carrier Identification Function will be the Carrier Identification Code (CIC) and/or the vertical feature(s) associated with the 8XX number. Call routing information in the SMS/800 reflects the desires of the owner of the 8XX number as entered in the SMS/800 by its chosen Responsible Organization (Resp. Org.).

Vertical Features:
In addition to the basic carrier identification function, 800Database Query Service subscribers may request vertical features through a Responsible Organization in accordance with the SMS/800 User Guide. Vertical features will be maintained within the Qwest SCP when technically feasible.

POTS Translation:
The POTS Translation vertical feature provides the option of having the ten-digit POTS number (i.e., NPA-NXX-XXXX) delivered instead of the 8XX dialed number (i.e., 1+8XX-XXXX) delivered to the service provider.

Call Handling and Destination Features:
Call Handling and Destination Features allow service subscriber's variable routing options by specifying a single carrier, multiple carriers (Exchange and/or Inter-exchange Carriers), single termination or multiple terminations.

STUDY METHODOLOGY
The hardware and software equipment costs were identified using the Switching Cost Model (SCM) Signaling System 7 (SS7) model. This model was developed to determine the economic costs of Qwest's Common Channel Signaling (CCS)/SS7 network. These economic costs are used to estimate the costs of services that use the SS7 network. One of these services is the InterLATA and IntraLATA 8XX Service. The term "cost" used in the model refers to initial cash outlays for hardware and software. Because software may be expensed, the term investment is not used. The model outputs expressed in terms of costs represent only the initial cash outlays. These outputs are the basis upon which the capital-related and operating expenses associated with these initial cash outlays are computed.

The SCM outputs were input to the TELRIC Cost Model. Factors were applied, including maintenance, ad valorem tax, administrative expense, common, business fees, power, sales tax, telco, interest during construction (IDC), land and building, sales expense, attributed costs and product management expense.

All costs, one time and recurring, were spread over the total levelized 8XX Database calls. The onetime costs are the 8XX Database Application Software and CRIS/CABS programming costs. The recurring costs include ISCP Expenses (Software On-site Installation and Support, Telegate Support per Year, Telecordia Software Support, IBM Software Mtce. Support, SMS/800 Management Team Billing).

Costs are developed for a "Basic Query", "POTS Translation" and "Call Handling".

Cell: A95
Comment: Section H - LIDB

DESCRIPTION

LIDB Query Service is a per query Switched Access Service. The query is assessed on all completed queries regardless of the output of the data. The query represents the transport from the Local Signaling Transfer Point (LSTP) to the Regional Signaling Transfer Point (RSTP) through the Message Relay Service (MRS) to the Service Control Point (SCP) and the actual retrieval of the data from the database. The query also is assessed on queries from the LSTP to the RSTP through the MRS then launched to another provider's SCP.

LIDB Query Service allows a CLEC to query QWEST's LIDB and secure the information to:
Validate a calling card
Automatically identify acceptance or rejection of collect or billed or third number calls, identify the billed number as a QWEST public or semi-public number, identify central office codes as vacant or active
Identify originating screening profiles associated with working telephone numbers,
Retrieve CLEC-defined data that the CLEC has stored in the QWEST LIDB

Thus, when a CLEC sends a Calling Card Verification query, a Billing Number Service query, an Originating Line Number Screening query or a GetData query to the QWEST SS7 network through the interconnection at the LSTP, the CLEC will be assessed a LIDB Query Service query charge.

STUDY METHODOLOGY
The costs are those which result from providing LIDB Query Service. Included in the per query cost are the following:

1. LSTP hardware, LSTP software, LSTP to RSTP data link hardware and software, RSTP hardware, RSTP software, RSTP to MRS SCP data link hardware and software, RSTP to LIDB SCP data link hardware and software, LIDB SCP hardware and software, MRS SCP hardware and software.

2. Database costs and associated labor.

Cell: A98
Comment: Section I – SIGNALING

DESCRIPTION
SS7 Signaling provides a means for transporting signaling information across our network. The following message types were studied:

Signal formulation is the capability of a Common Channel Signaling (CCS) end office or tandem switch to create or decode a CCS message. The ISUP Signal Formulation rate element recovers the costs associated with the formulation of call-related signaling messages for call setup, Integrated Services Digital Network (ISDN) User Part (ISUP), on a per call set up request. ISUP message length and content specifications are described in CCS/Signaling System 7 protocol.

Signal transport is the capability of the Common Channel Signaling (CCS) data links to carry a signaling message from one signaling network element to another. The ISUP Signal Transport rate element recovers the costs associated with the transmission of signaling data between the local Signal Transfer Point (STP) and the Service Switching Point (SSP) end office on a per call set up request basis. The TCAP Signal Transport rate element recovers the costs associated with the transmission of signaling data between the local Signal Transfer Point (STP) and the regional STP on a per data request basis.

Signal switching is the capability performed by the STP to route a signal message to its proper destination. The ISUP Signal Switching rate element recovers the costs associated with switching and routing ISUP signaling messages at the local STP on a per call set up request basis.

STUDY METHODOLOGY
This study uses the Signaling Interconnection Service model to identify the investment and expenses associated with SS7 Signaling. The model identifies the type and amount of hardware and/or software required for each component. Appropriate factors are then applied to convert the per request investments from SCM to per request costs.

This study also includes the costs associated with measuring and billing the Signaling Unbundled Network Elements (UNE). Investment and direct expense costs of the CROSS7/AMAT7 systems are a part of the signal switching UNE rate element cost

per call set up or data request.

Cell: A106
Comment: Section J - Shared Transport
DESCRIPTION OF SERVICES
Shared Transport is defined as the Co-Provider use of capacity on the U S WEST interoffice message trunk network and central office routing tables for the delivery of switched, voice grade traffic between USW end offices and tandem switches within the local calling area.

Shared Transport is only provided with Unbundled Local Switch Port elements. The existing routing tables resident in the switch will direct both U S WEST and Co-Provider traffic over U S WEST interoffice message trunk network. The Co-Provider may custom route operator services and directory assistance calls to unique trunks. The Co-Provider may not mix unbundled dedicated interoffice message trunk transport and shared transport in the same local calling area.

STUDY METHODOLOGY
This study uses the U S WEST Transport Module (TM) and Switching Module (SM) to calculate the investments associated with transporting calls over the U S WEST interoffice network. The output workbook converts TM and SM outputs to monthly equivalent investments using monthly traffic and mileage data. These investments are in turn converted to monthly costs using the factors calculated by the Expense Factors Module and Capital Costs Module.

STUDY ASSUMPTIONS

a. Costs are based on a least cost scorched node scenario and represent the cost of fully replacing the network required to provision the service, beginning from the existing grid of network nodes used by U S WEST today.
b. Costs do not reflect the emergence of widespread competition in the local exchange market.
c. All network investments are forward-looking:
i. Switching and transport equipment and facilities are digital.
ii. SONET is the forward looking technology in the interoffice network.
d. Standby capacity is a volume-sensitive cost. Non-volume sensitive spare switching capacity (e.g., modular spare) is a shared cost. Please refer to documentation for the Switching Module for further explanation.

Cell: A110
Comment: Section K - UDIT
Unbundled Dedicated Interoffice Transport (UDIT) provides the CLEC with a network element of a single transmission path between USW Wire Centers in the same LATA and state. UDIT is a bandwidth-specific interoffice transmission path designed to a DSX panel (or equivalent) in each Qwest Wire Center. The CLEC must have collocation in the USW serving wire center and have requested termination capacity through the collocation process. UDIT is available in DS0, DS1, DS3, OC-3, OC-12 and OC-48 where facilities are available. UDIT is distance sensitive and is for the sole use of the CLEC. The CLEC can assign channels and transport its choice of voice or data. UDIT is a point-to-point transmission path and not a self healing product.

UDIT consists of two elements; fixed and per mile costs. The fixed element contains the costs associated with the terminating equipment at both ends of the transmission path. The per mile costs contain the costs associated with cable, repeaters, and intermediate central office equipment. The fixed are expressed per DS0, DS1, DS3, OC-3, OC-12 or OC-48 circuit and the per mile costs are expressed per DS0, DS1, DS3, OC-3, OC-12 or OC-48 circuit, per airline mile.

Investment Development

The Interoffice Transport investments for DS0, DS1, DS3, OC-3, OC-12 and OC-48 were calculated using the Transport Module (TM). TM calculates the weighted average installed investment required for transport over the Qwest interoffice network. A weighted average investment is obtained by weighting the investments for various forward looking interoffice facility configurations by a state specific probability of occurrence.

Cell: A111
Comment: *DS3 to DS1 Multiplexing: Central Office Multiplexing includes the equipment necessary for an arrangement that converts a DS3* channel to twenty-eight DS1 (1.544 Mbps) channels utilizing time division multiplexing.

DS1 to DS0 Multiplexing: Central Office Multiplexing includes the equipment necessary for an arrangement that converts a DS1 channel to twenty-four DS0 channels utilizing time division multiplexing.

The multiplexing costs are aqual to the multiplexing costs provided in this study for Direct Trunked Transport.

Summary of Results

Cell: A175

Comment: E-UDIT:

Extended Unbundled Dedicated Interoffice Transport (EUDIT) provides the CLEC with a bandwidth specific transmission path between the Qwest Serving Wire Center to the CLEC's wire center or an IXC's point of presence located within the same Qwest Serving Wire Center area. EUDIT is available in DS0, DS1, DS3, OC-3, OC-12, and OC-48 bandwidths where facilities are available. CLEC can assign channels and transport its choice of voice or data. The Central Node and Remote Node are priced separately for OC-3, OC-12, and OC-48 bandwidths. Specifications, interfaces and parameters are described in Qwest Technical Publication 77389.

EUDIT investments are calculated using a Microsoft Excel spreadsheet based model called the NAC (Network Access Channel) model. The NAC model estimates the forward looking installed investment associated with circuits between a SWC and a CLEC's POI.

	A	B	C	D	E	F	G	H	I
1	Qwest Defaults 7/20/01 10:04:18 AM								
2	South Dakota	**Unbundled Loop**							
3		**Sorted by CLLI**							
4									
5	**Wire Center Name**	**CLLI**	**Wire Center Zone**	**Lines**	**Average Loop Length (Ft.)**	**Investment**	**TELRIC**	**Common**	**TELRIC + Common**
6	Aberdeen	ABRDSDCO	3	21206	13730	$1,494.69	$29.84	$1.34	$31.17
7	Arlington	ARTNSDCO	3	1231	24256	$3,725.44	$65.34	$1.34	$66.68
8	Belle Fourche	BLFRSDCO	3	3934	14128	$2,164.29	$40.37	$1.34	$41.70
9	Blackhawk	BLHKSDCE	2	3735	41275	$2,245.11	$42.45	$1.34	$43.79
10	Cavour	CAVRSDCO	3	296	38133	$8,100.81	$125.60	$1.34	$126.94
11	Chamberlain	CHBLSDCO	3	2349	11230	$2,204.07	$42.02	$1.34	$43.36
12	Colman	CLMNSDCO	3	683	14553	$2,816.58	$47.61	$1.34	$48.95
13	Canton	CNTNSDCO	3	2477	9537	$1,684.48	$33.37	$1.34	$34.70
14	Deadwood	DDWDSDCO	3	2680	22070	$2,361.96	$43.18	$1.34	$44.51
15	Desmet	DESMSDCO	3	1189	15324	$3,276.64	$58.19	$1.34	$59.52
16	Elk Point	ELPNSDCO	3	1466	21641	$2,711.20	$49.00	$1.34	$50.34
17	Flandreau	FLNDSDCO	3	2214	18837	$2,894.52	$53.12	$1.34	$54.46
18	Ft Pierre	FTPRSDCE	3	1498	10903	$2,505.26	$46.52	$1.34	$47.85
19	Hill City	HLCYSDCO	3	1755	31199	$4,117.36	$70.51	$1.34	$71.84
20	Harrisburg	HRBGSDCO	1	1009	27357	$2,328.41	$43.21	$1.34	$44.55
21	Huron	HURNSDCO	3	9839	11202	$1,312.97	$27.38	$1.34	$28.72
22	Iroquois	IRQSSDCO	3	381	26660	$5,774.10	$94.13	$1.34	$95.47
23	Lead	LEADSDCO	3	3088	17920	$2,248.46	$41.42	$1.34	$42.76
24	Lake Preston	LKPRSDCO	3	712	21704	$4,837.59	$81.52	$1.34	$82.86
25	Mcintosh	MCINSDCO	3	293	36480	$5,887.15	$93.71	$1.34	$95.04
26	Madison	MDSNSDCE	3	4891	10195	$1,398.06	$28.08	$1.34	$29.42
27	Milbank	MLBNSDCO	3	3647	14767	$2,428.21	$44.49	$1.34	$45.82
28	Miller	MLLRSDCO	3	1740	20923	$3,197.99	$56.00	$1.34	$57.33
29	Morristown	MRTWSDCO	3	229	34078	$7,254.46	$114.56	$1.34	$115.89
30	Mitchell	MTCHSDCO	3	10858	10431	$1,551.13	$30.47	$1.34	$31.81
31	Pierre	PIRRSDCO	3	13380	14021	$1,332.89	$27.77	$1.34	$29.10
32	Redfield	RDFDSDCO	3	2827	29812	$4,286.56	$73.67	$1.34	$75.00
33	Rapid City	RPCYSDCO	2	47779	16201	$1,122.30	$24.52	$1.34	$25.86
34	Rapid Valley	RPVYSDCO	2	3295	12542	$1,993.48	$37.87	$1.34	$39.20
35	Spearfish	SPRFSDCO	3	7936	11648	$1,749.73	$34.51	$1.34	$35.84
36	Sturgis	STRGSDCO	3	5485	15996	$2,124.79	$40.18	$1.34	$41.52
37	Sioux Falls Main	SXFLSDCO	1	70261	12014	$777.53	$19.12	$1.34	$20.46
38	Sioux Falls Southeast	SXFLSDSE	1	3867	32206	$1,173.55	$25.98	$1.34	$27.32
39	Sioux Falls Southwest	SXFLSDSW	1	13218	11771	$1,299.80	$27.50	$1.34	$28.84
40	Tea	TEA-SDCO	1	1332	16804	$1,619.14	$33.15	$1.34	$34.49
41	Timber Lake	TMLKSDCO	3	556	22583	$4,675.51	$76.22	$1.34	$77.55
42	Volga	VOLGSDCO	3	1298	25985	$3,442.95	$59.92	$1.34	$61.25
43	Vermillion	VRMLSDCO	3	8788	8086	$1,042.25	$22.98	$1.34	$24.31
44	Whitewood	WHWDSDCO	3	647	22601	$3,519.19	$61.75	$1.34	$63.08
45	Warwick	WRWKSDCO	2	4104	18783	$1,848.47	$35.89	$1.34	$37.22
46	Watertown	WTTWSDCO	3	15903	13399	$1,492.80	$29.90	$1.34	$31.23
47	Yankton	YNTNSDCO	3	11736	13409	$1,616.69	$31.82	$1.34	$33.16
176									

Section A - Unbundled Loop
Loop - Dev Total Prod Costs 2W

Row	Qwest Defaults 7/20/01 10:04:18 AM South Dakota	Source or Calculation	Factor Value [AP p1 cB]	Statewide Average Total Loop 2-Wire	Feeder 2-Wire	Distribution 2-Wire	Unbundled Loop Grooming 2-Wire	Network Interface Device 2-Wire	Wire Center Zone 1 Total Loop 2-Wire	Feeder 2-Wire	Distribution 2-Wire
			A	B	C	D	F	E	F	G	H
1	**Investment**	Investment Cost(Loop+ Billing)		1456.25	645.44	810.81	67.31	44.98	901.53	276.32	625.21
2											
3	Investment Based Costs (IBC)	cJ		23.04	9.25	13.78	1.07	0.76	14.60	4.04	10.56
4	Element Specific Expenses	sA p16 E7		0.0165	0.0165	0.0165	0.0165	0.0165	0.0165	0.0165	0.0165
5	***Total IBC + Element Specific Expenses***	***r3 + r4***		23.05	9.27	13.80	1.09	0.77	14.62	4.05	10.58
6											
7	***Directly Assigned***										
8	Product Management Expense	cA*r5	0.02557	0.5893	0.2369	0.3528	0.0278	0.0198	0.5893	0.2369	0.3528
9	Sales Expense	cA*r5	0.00922	0.2126	0.0855	0.1273	0.0100	0.0071	0.2126	0.0855	0.1273
10	Product Advertising Expense	cA*r5	0.00000	0.0000	0.0000	0.0000	0.0000	0.0000	0.0000	0.0000	0.0000
11	Business Fees (Other Operating Taxes)	cA*(r5+r8:r10)	0.00203	0.0483	0.0194	0.0289	0.0023	0.0016	0.0483	0.0194	0.0289
12	***Directly Assigned Costs***	***Sum r8:r11***		0.8503	0.3418	0.5091	0.0401	0.0285	0.8503	0.3418	0.5091
13											
14	***Total Direct***	***r5 + r12***		23.90	9.61	14.31	1.13	0.80	15.47	4.40	11.09
15											
16	***Directly Attributed***										
17	Network Operations	cA*r14	0.04088	0.9771	0.3928	0.5850	0.0461	0.0328	0.9771	0.3928	0.5850
18	Network Support Assets	cA*r14	0.01536	0.3672	0.1476	0.2199	0.0173	0.0123	0.3672	0.1476	0.2199
19	General Support Assets	cA*r14	0.06951	1.6614	0.6679	0.9947	0.0784	0.0557	1.6614	0.6679	0.9947
20	General Purpose Computers	cA*r14	0.03471	0.8298	0.3336	0.4968	0.0392	0.0278	0.8298	0.3336	0.4968
21	Uncollectible - Interconnect	cA*r14	0.00040	0.0096	0.0039	0.0057	0.0005	0.0003	0.0096	0.0039	0.0057
22	Accounting and Finance Expense	cA*r14	0.00884	0.2113	0.0849	0.1265	0.0100	0.0071	0.2113	0.0849	0.1265
23	Human Resources Expense	cA*r14	0.00814	0.1947	0.0783	0.1166	0.0092	0.0065	0.1947	0.0783	0.1166
24	Information Management Expense	cA*r14	0.05701	1.3627	0.5478	0.8158	0.0643	0.0457	1.3627	0.5478	0.8158
25	Intangibles	cA*r14	0.00209	0.0500	0.0201	0.0299	0.0024	0.0017	0.0500	0.0201	0.0299
26	***Total Directly Attributed Costs***	***Sum r17:r25***		5.6638	2.2770	3.3908	0.2674	0.1899	5.6638	2.2770	3.3908
27											
28	***Total Element Long Run Incremental Costs***	***r14 + r26***		29.57	11.89	17.70	1.40	0.99	21.13	6.67	14.48
29											
30	***Common***										
31	Executive Expense	cA*r28	0.00780	0.2308	0.0928	0.1382	0.0109	0.0077	0.2308	0.0928	0.1382
32	Planning Expense	cA*r28	0.00058	0.0172	0.0069	0.0103	0.0008	0.0006	0.0172	0.0069	0.0103
33	External Relations Expense	cA*r28	0.01303	0.3852	0.1549	0.2306	0.0182	0.0129	0.3852	0.1549	0.2306
34	Legal Expense	cA*r28	0.00615	0.1818	0.0731	0.1088	0.0086	0.0061	0.1818	0.0731	0.1088
35	Other Procurement Expense	cA*r28	0.00236	0.0698	0.0280	0.0418	0.0033	0.0023	0.0698	0.0280	0.0418
36	Research and Development Expense	cA*r28	0.00004	0.0011	0.0004	0.0006	0.0001	0.0000	0.0011	0.0004	0.0006
37	Other General and Admin Exp	cA*r28	0.01521	0.4498	0.1808	0.2693	0.0212	0.0151	0.4498	0.1808	0.2693
38	***Total Common Costs***	***Sum r31:r37***		1.3355	0.5369	0.7995	0.0630	0.0448	1.3355	0.5369	0.7995
39											
40	***TELRIC + Common***	***r27 + r38***		**30.90**	**12.42**	**18.50**	**1.46**	**1.04**	**22.47**	**7.21**	**15.28**

c = column, r = row, s = section, p = page, AP = Appendix

Section A - Unbundled Loop
Loop - Dev Total Prod Costs 2W

Row	Qwest Defaults 7/20/01 10:04:18 AM South Dakota	Source or Calculation	Factor Value [AP p1 cB]	Wire Center Zone 2 Total Loop 2-Wire	Feeder 2-Wire	Distribution 2-Wire	Wire Center Zone 3 Total Loop 2-Wire	Feeder 2-Wire	Distribution 2-Wire
			A	I	J	K	L	M	N
1	**Investment**	Investment Cost(Loop+ Billing)		1292.79	501.90	790.89	1859.62	927.76	931.86
2									
3	Investment Based Costs (IBC)	cJ		20.67	7.25	13.42	29.12	13.23	15.89
4	Element Specific Expenses	sA p16 E7		0.0165	0.0165	0.0165	0.0165	0.0165	0.0165
5	***Total IBC + Element Specific Expenses***	***r3 + r4***		20.68	7.27	13.43	29.14	13.24	15.91
6									
7	***Directly Assigned***								
8	Product Management Expense	cA*r5	0.02557	0.5893	0.2369	0.3528	0.5893	0.2369	0.3528
9	Sales Expense	cA*r5	0.00922	0.2126	0.0855	0.1273	0.2126	0.0855	0.1273
10	Product Advertising Expense	cA*r5	0.00000	0.0000	0.0000	0.0000	0.0000	0.0000	0.0000
11	Business Fees (Other Operating Taxes)	cA*(r5+r8:r10)	0.00203	0.0483	0.0194	0.0289	0.0483	0.0194	0.0289
12	***Directly Assigned Costs***	***Sum r8:r11***		0.8503	0.3418	0.5091	0.8503	0.3418	0.5091
13									
14	***Total Direct***	***r5 + r12***		21.53	7.61	13.94	29.99	13.59	16.42
15									
16	***Directly Attributed***								
17	Network Operations	cA*r14	0.04088	0.9771	0.3928	0.5850	0.9771	0.3928	0.5850
18	Network Support Assets	cA*r14	0.01536	0.3672	0.1476	0.2199	0.3672	0.1476	0.2199
19	General Support Assets	cA*r14	0.06951	1.6614	0.6679	0.9947	1.6614	0.6679	0.9947
20	General Purpose Computers	cA*r14	0.03471	0.8298	0.3336	0.4968	0.8298	0.3336	0.4968
21	Uncollectible - Interconnect	cA*r14	0.00040	0.0096	0.0039	0.0057	0.0096	0.0039	0.0057
22	Accounting and Finance Expense	cA*r14	0.00884	0.2113	0.0849	0.1265	0.2113	0.0849	0.1265
23	Human Resources Expense	cA*r14	0.00814	0.1947	0.0783	0.1166	0.1947	0.0783	0.1166
24	Information Management Expense	cA*r14	0.05701	1.3627	0.5478	0.8158	1.3627	0.5478	0.8158
25	Intangibles	cA*r14	0.00209	0.0500	0.0201	0.0299	0.0500	0.0201	0.0299
26	***Total Directly Attributed Costs***	***Sum r17:r25***		5.6638	2.2770	3.3908	5.6638	2.2770	3.3908
27									
28	***Total Element Long Run Incremental Costs***	***r 14 + r26***		27.20	9.88	17.33	35.65	15.86	19.81
29									
30	***Common***								
31	Executive Expense	cA*r28	0.00780	0.2308	0.0928	0.1382	0.2308	0.0928	0.1382
32	Planning Expense	cA*r28	0.00058	0.0172	0.0069	0.0103	0.0172	0.0069	0.0103
33	External Relations Expense	cA*r28	0.01303	0.3852	0.1549	0.2306	0.3852	0.1549	0.2306
34	Legal Expense	cA*r28	0.00615	0.1818	0.0731	0.1088	0.1818	0.0731	0.1088
35	Other Procurement Expense	cA*r28	0.00236	0.0698	0.0280	0.0418	0.0698	0.0280	0.0418
36	Research and Development Expense	cA*r28	0.00004	0.0011	0.0004	0.0006	0.0011	0.0004	0.0006
37	Other General and Admin Exp	cA*r28	0.01521	0.4498	0.1808	0.2693	0.4498	0.1808	0.2693
38	***Total Common Costs***	***Sum r31:r37***		1.3355	0.5369	0.7995	1.3355	0.5369	0.7995
39									
40	***TELRIC + Common***	***r27 + r38***		**28.53**	**10.42**	**18.13**	**36.99**	**16.40**	**20.61**

c = column, r = row, s = section, p = page, AP = Appendix

Section A - Unbundled Loop
Loop - Dev Total Prod Costs 4W

Row	Qwest Defaults 7/20/01 10:04:18 AM South Dakota	Source or Calculation	Factor Value [AP p1 cB]	Statewide Average Total Loop 4-Wire	Feeder 4-Wire	Distribution 4-Wire	Unbundled Loop Grooming 4-Wire	Network Interface Device 4-Wire	Wire Center Zone 1 Total Loop 4-Wire	Feeder 4-Wire	Distribution 4-Wire
			A	B	C	D	F	E	F	G	H
1	**Investment**	Investment Cost(Loop+ Billing)		2912.50	1290.87	1621.63	158.01	89.96	1803.05	552.63	1250.42
2											
3	Investment Based Costs (IBC)	" cJ		46.07	18.50	27.57	2.52	1.51	29.20	8.08	21.13
4	Element Specific Expenses	sA p16 E7		0.0165	0.0165	0.0165	0.0165	0.0165	0.0165	0.0165	0.0165
5	***Total IBC + Element Specific Expenses***	***r3 + r4***		46.09	18.52	27.59	2.53	1.53	29.22	8.09	21.14
6											
7	***Directly Assigned***										
8	Product Management Expense	cA*r5	0.02557	1.1783	0.4734	0.7052	0.0647	0.0391	1.1783	0.4734	0.7052
9	Sales Expense	cA*r5	0.00922	0.4251	0.1708	0.2545	0.0234	0.0141	0.4251	0.1708	0.2545
10	Product Advertising Expense	cA*r5	0.00000	0.0000	0.0000	0.0000	0.0000	0.0000	0.0000	0.0000	0.0000
11	Business Fees (Other Operating Taxes)	cA*(r5+r8:r10)	0.00203	0.0966	0.0388	0.0578	0.0053	0.0032	0.0966	0.0388	0.0578
12	***Directly Assigned Costs***	***Sum r8:r11***		1.7000	0.6831	1.0175	0.0934	0.0564	1.7000	0.6831	1.0175
13											
14	***Total Direct***	***r5 + r12***		47.79	19.20	28.60	2.63	1.59	30.92	8.78	22.16
15											
16	***Directly Attributed***										
17	Network Operations	cA*r14	0.04088	1.9536	0.7850	1.1693	0.1074	0.0648	1.9536	0.7850	1.1693
18	Network Support Assets	cA*r14	0.01536	0.7342	0.2950	0.4395	0.0403	0.0244	0.7342	0.2950	0.4395
19	General Support Assets	cA*r14	0.06951	3.3217	1.3347	1.9881	0.1825	0.1102	3.3217	1.3347	1.9881
20	General Purpose Computers	cA*r14	0.03471	1.6589	0.6666	0.9929	0.0912	0.0551	1.6589	0.6666	0.9929
21	Uncollectible - Interconnect	cA*r14	0.00040	0.0192	0.0077	0.0115	0.0011	0.0006	0.0192	0.0077	0.0115
22	Accounting and Finance Expense	cA*r14	0.00884	0.4224	0.1697	0.2528	0.0232	0.0140	0.4224	0.1697	0.2528
23	Human Resources Expense	cA*r14	0.00814	0.3892	0.1564	0.2330	0.0214	0.0129	0.3892	0.1564	0.2330
24	Information Management Expense	cA*r14	0.05701	2.7244	1.0947	1.6307	0.1497	0.0904	2.7244	1.0947	1.6307
25	Intangibles	cA*r14	0.00209	0.0999	0.0402	0.0598	0.0055	0.0033	0.0999	0.0402	0.0598
26	***Total Directly Attributed Costs***	***Sum r17:r25***		11.3235	4.5500	6.7776	0.6223	0.3758	11.3235	4.5500	6.7776
27											
28	***Total Element Long Run Incremental Costs***	***r 14 + r26***		59.11	23.75	35.38	3.25	1.96	42.24	13.33	28.94
29											
30	***Common***										
31	Executive Expense	cA*r28	0.00780	0.4614	0.1854	0.2761	0.0254	0.0153	0.4614	0.1854	0.2761
32	Planning Expense	cA*r28	0.00058	0.0343	0.0138	0.0205	0.0019	0.0011	0.0343	0.0138	0.0205
33	External Relations Expense	cA*r28	0.01303	0.7702	0.3095	0.4610	0.0423	0.0256	0.7702	0.3095	0.4610
34	Legal Expense	cA*r28	0.00615	0.3634	0.1460	0.2175	0.0200	0.0121	0.3634	0.1460	0.2175
35	Other Procurement Expense	cA*r28	0.00236	0.1395	0.0560	0.0835	0.0077	0.0046	0.1395	0.0560	0.0835
36	Research and Development Expense	cA*r28	0.00004	0.0021	0.0009	0.0013	0.0001	0.0001	0.0021	0.0009	0.0013
37	Other General and Admin Exp	cA*r28	0.01521	0.8992	0.3613	0.5382	0.0494	0.0298	0.8992	0.3613	0.5382
38	***Total Common Costs***	***Sum r31:r37***		2.6700	1.0729	1.5981	0.1467	0.0886	2.6700	1.0729	1.5981
39											
40	***TELRIC + Common***	***r27 + r38***		**61.78**	**24.82**	**36.98**	**3.40**	**2.05**	**44.91**	**14.40**	**30.54**

c = column, r = row, s = section, p = page, AP = Appendix

Section A - Unbundled Loop
Loop - Dev Total Prod Costs 4W

Row	Qwest Defaults 7/20/01 10:04:18 AM South Dakota	Source or Calculation	Factor Value [AP p1 cB]	Wire Center Zone 2 Total Loop 4-Wire	Feeder 4-Wire	Distribution 4-Wire	Wire Center Zone 3 Total Loop 4-Wire	Feeder 4-Wire	Distribution 4-Wire
			A	I	J	K	L	M	N
1	**Investment**	Investment Cost(Loop+ Billing)		2585.58	1003.81	1581.78	3719.25	1855.52	1863.73
2									
3	Investment Based Costs (IBC)	" cJ		41.33	14.50	26.83	58.25	26.46	31.79
4	Element Specific Expenses	sA p16 E7		0.0165	0.0165	0.0165	0.0165	0.0165	0.0165
5	***Total IBC + Element Specific Expenses***	***r3 + r4***		41.35	14.52	26.85	58.26	26.47	31.81
6									
7	***Directly Assigned***								
8	Product Management Expense	cA*r5	0.02557	1.1783	0.4734	0.7052	1.1783	0.4734	0.7052
9	Sales Expense	cA*r5	0.00922	0.4251	0.1708	0.2545	0.4251	0.1708	0.2545
10	Product Advertising Expense	cA*r5	0.00000	0.0000	0.0000	0.0000	0.0000	0.0000	0.0000
11	Business Fees (Other Operating Taxes)	cA*(r5+r8:r10)	0.00203	0.0966	0.0388	0.0578	0.0966	0.0388	0.0578
12	***Directly Assigned Costs***	***Sum r8:r11***		1.7000	0.6831	1.0175	1.7000	0.6831	1.0175
13									
14	***Total Direct***	***r5 + r12***		43.05	15.20	27.87	59.96	27.16	32.82
15									
16	***Directly Attributed***								
17	Network Operations	cA*r14	0.04088	1.9536	0.7850	1.1693	1.9536	0.7850	1.1693
18	Network Support Assets	cA*r14	0.01536	0.7342	0.2950	0.4395	0.7342	0.2950	0.4395
19	General Support Assets	cA*r14	0.06951	3.3217	1.3347	1.9881	3.3217	1.3347	1.9881
20	General Purpose Computers	cA*r14	0.03471	1.6589	0.6666	0.9929	1.6589	0.6666	0.9929
21	Uncollectible - Interconnect	cA*r14	0.00040	0.0192	0.0077	0.0115	0.0192	0.0077	0.0115
22	Accounting and Finance Expense	cA*r14	0.00884	0.4224	0.1697	0.2528	0.4224	0.1697	0.2528
23	Human Resources Expense	cA*r14	0.00814	0.3892	0.1564	0.2330	0.3892	0.1564	0.2330
24	Information Management Expense	cA*r14	0.05701	2.7244	1.0947	1.6307	2.7244	1.0947	1.6307
25	Intangibles	cA*r14	0.00209	0.0999	0.0402	0.0598	0.0999	0.0402	0.0598
26	***Total Directly Attributed Costs***	***Sum r17:r25***		11.3235	4.5500	6.7776	11.3235	4.5500	6.7776
27									
28	***Total Element Long Run Incremental Costs***	***r 14 + r26***		54.37	19.75	34.65	71.29	31.71	39.60
29									
30	***Common***								
31	Executive Expense	cA*r28	0.00780	0.4614	0.1854	0.2761	0.4614	0.1854	0.2761
32	Planning Expense	cA*r28	0.00058	0.0343	0.0138	0.0205	0.0343	0.0138	0.0205
33	External Relations Expense	cA*r28	0.01303	0.7702	0.3095	0.4610	0.7702	0.3095	0.4610
34	Legal Expense	cA*r28	0.00615	0.3634	0.1460	0.2175	0.3634	0.1460	0.2175
35	Other Procurement Expense	cA*r28	0.00236	0.1395	0.0560	0.0835	0.1395	0.0560	0.0835
36	Research and Development Expense	cA*r28	0.00004	0.0021	0.0009	0.0013	0.0021	0.0009	0.0013
37	Other General and Admin Exp	cA*r28	0.01521	0.8992	0.3613	0.5382	0.8992	0.3613	0.5382
38	***Total Common Costs***	***Sum r31:r37***		2.6700	1.0729	1.5981	2.6700	1.0729	1.5981
39									
40	***TELRIC + Common***	***r27 + r38***		**57.04**	**20.82**	**36.24**	**73.96**	**32.78**	**41.20**

c = column, r = row, s = section, p = page, AP = Appendix

Section A - Unbundled Loop
Avg Loop - Investment Cost 2W

	A	B	C	D	E	F	G	H	I	J
1	Qwest Defaults 7/20/01 10:04:18 AM									
2	South Dakota					Average Unbundled Loop				
3	Acct	FRC	Account Name	Investment	Depreciation	Cost of Money	Income Tax	Ad Valorem	Maintenance	Total Capital Costs
4	**Total Loop (2 wire)**				cD*(AP p7 cA)/12	cD*(AP p7 cB)/12	cD*(AP p7 cC)/12	cD*(AP p7 cD)/12	cD*(AP p7 cE)/12	sum(cE:cI)
5	2111	20C	Land	0.33	0.0000000	0.0026678	0.0010089	0.0002381	0.0006179	0.0045327
6	2121	110C	Building	12.70	0.0273342	0.0792571	0.0299722	0.0091175	0.0236636	0.1693446
7	2212	377C	Digital Switch	29.72	0.2697344	0.1125516	0.0425629	0.0213308	0.0518586	0.4980383
8	2232.2	257C	Pair Gain—Digital	207.23	1.8947000	0.7849507	0.2968398	0.1487320	0.2041222	3.3293447
9	2411	1C	Poles	19.08	0.1948515	0.0586487	0.0221788	0.0136915	0.0516006	0.3409711
10	2421.11,.21	52C	Aerial Cbl Metallic	35.88	0.3145728	0.1625964	0.0614880	0.0257537	0.3932457	0.9576566
11	2421.11	42C	Aerial Drop	14.94	0.1309679	0.0676947	0.0255997	0.0107222	0.1637222	0.3987066
12	2422.11,.21	5C	UG Cbl Metallic	51.24	0.3885089	0.2399812	0.0907522	0.0367757	0.1031309	0.8591489
13	2422.12,.22	85C	UG Cbl Nonmetallic	6.98	0.0411633	0.0329097	0.0124452	0.0050116	0.0041298	0.0956596
14	2423.11,.21	45C	Buried Cbl Metallic	647.56	3.2864745	3.0790984	1.1644032	0.4647669	2.5749503	10.5696933
15	2423.11	35C	Buried Drop	84.31	0.4278894	0.4008897	0.1516019	0.0605113	0.3352511	1.3761434
16	2423.12,.22	845C	Buried Cbl Nonmetallic	260.30	1.3210551	1.2376967	0.4680519	0.1868211	0.2443096	3.4579343
17	2426.1	62C	Intrabuilding Cbl., Exch., Metallic	13.61	0.0710991	0.0661992	0.0250341	0.0097677	0.0264122	0.1985123
18	2431	3C	Aerial Wire	1.16	0.0265371	0.0088802	0.0033582	0.0008341	0.0009687	0.0405783
19	2441	4C	Conduit System	71.22	0.1272556	0.3833756	0.1449787	0.0511129	0.0329854	0.7397082
20			**Total**	**1456.25**	**8.52**	**6.72**	**2.54**	**1.05**	**4.21**	**$ 23.04**
21	**Feeder (2 wire)**									
22	2111	20C	Land	0.33	0.0000000	0.0026678	0.0010089	0.0002381	0.0006179	0.0045327
23	2121	110C	Building	12.70	0.0273342	0.0792571	0.0299722	0.0091175	0.0236636	0.1693446
24	2212	377C	Digital Switch	29.72	0.2697344	0.1125516	0.0425629	0.0213308	0.0518586	0.4980383
25	2232.2	257C	Pair Gain—Digital	207.23	1.8947000	0.7849507	0.2968398	0.1487320	0.2041222	3.3293447
26	2411	1C	Poles	0.29	0.0029578	0.0008903	0.0003367	0.0002078	0.0007833	0.0051759
27	2421.11,.21	52C	Aerial Cbl Metallic	0.56	0.0049298	0.0025481	0.0009636	0.0004036	0.0061628	0.0150080
28	2422.11,.21	5C	UG Cbl Metallic	46.56	0.3530358	0.2180696	0.0824660	0.0334179	0.0937144	0.7807037
29	2422.12,.22	85C	UG Cbl Nonmetallic	6.98	0.0411633	0.0329097	0.0124452	0.0050116	0.0041298	0.0956596
30	2423.11,.21	45C	Buried Cbl Metallic	9.55	0.0484610	0.0454031	0.0171698	0.0068533	0.0379692	0.1558564
31	2423.12,.22	845C	Buried Cbl Nonmetallic	260.30	1.3210551	1.2376967	0.4680519	0.1868211	0.2443096	3.4579343
32	2441	4C	Conduit System	71.22	0.1272556	0.3833756	0.1449787	0.0511129	0.0329854	0.7397082
33			**Total**	**645.44**	**4.09**	**2.90**	**1.10**	**0.46**	**0.70**	**$ 9.25**
34	**Distribution (2 wire)**									
35	2411	1C	Poles	18.79	0.1918937	0.0577584	0.0218421	0.0134837	0.0508173	0.3357952
36	2421.11,.21	52C	Aerial Cbl Metallic	35.32	0.3096429	0.1600483	0.0605244	0.0253501	0.3870829	0.9426486
37	2421.11	42C	Aerial Drop	14.94	0.1309679	0.0676947	0.0255997	0.0107222	0.1637222	0.3987066
38	2422.11,.21	5C	UG Cbl Metallic	4.68	0.0354731	0.0219117	0.0082862	0.0033578	0.0094164	0.0784452
39	2423.11,.21	45C	Buried Cbl Metallic	638.01	3.2380135	3.0336953	1.1472334	0.4579136	2.5369811	10.4138370
40	2423.11	35C	Buried Drop	84.31	0.4278894	0.4008897	0.1516019	0.0605113	0.3352511	1.3761434
41	2426.1	62C	Intrabuilding Cbl., Exch., Metallic	13.61	0.0710991	0.0661992	0.0250341	0.0097677	0.0264122	0.1985123
42	2431	3C	Aerial Wire	1.16	0.0265371	0.0088802	0.0033582	0.0008341	0.0009687	0.0405783
43			**Total**	**810.81**	**4.43**	**3.82**	**1.44**	**0.58**	**3.51**	**$ 13.78**
44	**Loop Grooming 2W**									
45	2111	20C	Land	0.09	0.0000000	0.0007183	0.0002716	0.0000641	0.0001664	0.0012204
46	2121	110C	Building	3.42	0.0073579	0.0213346	0.0080680	0.0024543	0.0063698	0.0455845
47	2232.3	257C	Pair Gain—Digital (Loop Grooming)	63.80	0.5833012	0.2416544	0.0913849	0.0457885	0.0628409	1.0249700
48			**Total**	**67.31**	**0.59**	**0.26**	**0.10**	**0.05**	**0.07**	**$ 1.07**
49	**Loop Grooming 4W**									
50	2111	20C	Land	0.21	0.0000000	0.0016863	0.0006377	0.0001505	0.0003906	0.0028652
51	2121	110C	Building	8.03	0.0172741	0.0500873	0.0189412	0.0057619	0.0149544	0.1070189
52	2232.3	257C	Pair Gain—Digital (Loop Grooming)	149.78	1.3694181	0.5673329	0.2145447	0.1074979	0.1475319	2.4063256
53			**Total**	**158.01**	**1.39**	**0.62**	**0.23**	**0.11**	**0.16**	**$ 2.52**
54	**Billing**									
55	2124	361C	General Purpose Comp. (Billing)	**0.0001123**	**0.0000015**	**0.0000004**	**0.0000002**	**0.0000001**	**0.0000000**	**0.0000022**
56	**Network Interface Device (2 wire)**									
57	2421.11	42C	Aerial Drop	4.40	0.0385606	0.0199312	0.0075373	0.0031569	0.0482044	0.1173903
58	2423.11	35C	Buried Drop	27.24	0.1382419	0.1295189	0.0489793	0.0195499	0.1083125	0.4446026
59	2426.1	62C	Intrabuilding Cbl., Exch., Metallic	13.34	0.0697002	0.0648966	0.0245416	0.0095755	0.0258925	0.1946063
60			**Total**	**44.98**	**0.25**	**0.21**	**0.08**	**0.03**	**0.18**	**$ 0.76**
61	**Investment Sources**									
62	Land= (AP p12 D10) * 377C + (AP p12 E10) * (57C+257C+357C+357CS)						Building = (AP p12 B10) * 377C + (AP p12 C10) * (57C+257C+357C+357CS)			
63	Unbundled Loop = sA p9 cD-I							Billing = AP p10 F21		

Section A - Unbundled Loop
Loop Zone 1- Investment Cost 2W

	A	B	C	D	E	F	G	H	I	J
1	Qwest Defaults 7/20/01 10:04:18 AM									
2	South Dakota					**Wire Center Zone 1 Unbundled Loop**				
3	**Acct**	**FRC**	**Account Name**	**Investment**	**Depreciation**	**Cost of Money**	**Income Tax**	**Ad Valorem**	**Maintenance**	**Total Capital Costs**
4	**Loop (2 wire)**				cD*(AP p7 cA)/12	cD*(AP p7 cB)/12	cD*(AP p7 cC)/12	cD*(AP p7 cD)/12	cD*(AP p7 cE)/12	sum(cE:cI)
5	2111	20C	Land	0.18	0.0000000	0.0014807	0.0005599	0.0001321	0.0003430	0.0025157
6	2121	110C	Building	7.05	0.0151735	0.0439965	0.0166379	0.0050612	0.0131359	0.0940050
7	2212	377C	Digital Switch	29.72	0.2697344	0.1125516	0.0425629	0.0213308	0.0518586	0.4980383
8	2232.2	257C	Pair Gain—Digital	101.79	0.9306510	0.3855571	0.1458037	0.0730551	0.1002621	1.6353290
9	2411	1C	Poles	12.63	0.1289884	0.0388244	0.0146820	0.0090636	0.0341587	0.2257171
10	2421.11,.21	52C	Aerial Cbl Metallic	24.32	0.2132058	0.1102018	0.0416743	0.0174549	0.2665274	0.6490643
11	2421.11	42C	Aerial Drop	11.08	0.0971606	0.0502204	0.0189915	0.0079544	0.1214599	0.2957869
12	2422.11,.21	5C	UG Cbl Metallic	49.10	0.3722709	0.2299511	0.0869591	0.0352386	0.0988205	0.8232401
13	2422.12,.22	85C	UG Cbl Nonmetallic	3.86	0.0227838	0.0182154	0.0068884	0.0027739	0.0022859	0.0529473
14	2423.11,.21	45C	Buried Cbl Metallic	490.33	2.4885363	2.3315100	0.8816924	0.3519240	1.9497663	8.0034290
15	2423.11	35C	Buried Drop	63.84	0.3240090	0.3035641	0.1147969	0.0458207	0.2538608	1.0420515
16	2423.12,.22	845C	Buried Cbl Nonmetallic	26.87	0.1363706	0.1277656	0.0483163	0.0192853	0.0252197	0.3569576
17	2426.1	62C	Intrabuilding Cbl., Exch., Metallic	18.81	0.0982702	0.0914977	0.0346011	0.0135004	0.0365058	0.2743751
18	2431	3C	Aerial Wire	0.20	0.0046382	0.0015521	0.0005869	0.0001458	0.0001693	0.0070923
19	2441	4C	Conduit System	61.73	0.1103092	0.3323220	0.1256721	0.0443062	0.0285928	0.6412024
20			**Total**	**901.53**	**5.21**	**4.18**	**1.58**	**0.65**	**2.98**	**$ 14.60**
21	**Feeder (2 wire)**									
22	2111	20C	Land	0.18	0.0000000	0.0014807	0.0005599	0.0001321	0.0003430	0.0025157
23	2121	110C	Building	7.05	0.0151735	0.0439965	0.0166379	0.0050612	0.0131359	0.0940050
24	2212	377C	Digital Switch	29.72	0.2697344	0.1125516	0.0425629	0.0213308	0.0518586	0.4980383
25	2232.2	257C	Pair Gain—Digital	101.79	0.9306510	0.3855571	0.1458037	0.0730551	0.1002621	1.6353290
26	2411	1C	Poles	0.10	0.0009864	0.0002969	0.0001123	0.0000693	0.0002612	0.0017261
27	2421.11,.21	52C	Aerial Cbl Metallic	0.19	0.0016440	0.0008498	0.0003213	0.0001346	0.0020552	0.0050049
28	2422.11,.21	5C	UG Cbl Metallic	42.75	0.3241043	0.2001987	0.0757079	0.0306793	0.0860345	0.7167246
29	2422.12,.22	85C	UG Cbl Nonmetallic	3.86	0.0227838	0.0182154	0.0068884	0.0027739	0.0022859	0.0529473
30	2423.11,.21	45C	Buried Cbl Metallic	2.08	0.0105440	0.0098787	0.0037358	0.0014911	0.0082612	0.0339107
31	2423.12,.22	845C	Buried Cbl Nonmetallic	26.87	0.1363706	0.1277656	0.0483163	0.0192853	0.0252197	0.3569576
32	2441	4C	Conduit System	61.73	0.1103092	0.3323220	0.1256721	0.0443062	0.0285928	0.6412024
33			**Total**	**276.32**	**1.82**	**1.23**	**0.47**	**0.20**	**0.32**	**$ 4.04**
34	**Distribution (2 wire)**									
35	2411	1C	Poles	12.53	0.1280020	0.0385275	0.0145697	0.0089942	0.0338975	0.2239910
36	2421.11,.21	52C	Aerial Cbl Metallic	24.13	0.2115618	0.1093521	0.0413530	0.0173203	0.2644722	0.6440594
37	2421.11	42C	Aerial Drop	11.08	0.0971606	0.0502204	0.0189915	0.0079544	0.1214599	0.2957869
38	2422.11,.21	5C	UG Cbl Metallic	6.35	0.0481665	0.0297524	0.0112513	0.0045594	0.0127860	0.1065155
39	2423.11,.21	45C	Buried Cbl Metallic	488.26	2.4779923	2.3216313	0.8779566	0.3504329	1.9415051	7.9695183
40	2423.11	35C	Buried Drop	63.84	0.3240090	0.3035641	0.1147969	0.0458207	0.2538608	1.0420515
41	2426.1	62C	Intrabuilding Cbl., Exch., Metallic	18.81	0.0982702	0.0914977	0.0346011	0.0135004	0.0365058	0.2743751
42	2431	3C	Aerial Wire	0.20	0.0046382	0.0015521	0.0005869	0.0001458	0.0001693	0.0070923
43			**Total**	**625.21**	**3.39**	**2.95**	**1.11**	**0.45**	**2.66**	**$ 10.56**
44	**Investment Sources**									
45	Land= (AP p12 D10) * 377C + (AP p12 E10) * (57C+257C+357C+357CS)						Building = (AP p12 B10) * 377C + (AP p12 C10) * (57C+257C+357C+357CS)			
46	Unbundled Loop = sA p9 cD-I							Billing = AP p10 F21		

Section A - Unbundled Loop
Loop Zone 2- Investment Cost 2W

	A	B	C	D	E	F	G	H	I	J
1	Qwest Defaults 7/20/01 10:04:18 AM									
2	South Dakota				**Wire Center Zone 2 Unbundled Loop**					
3	**Acct**	**FRC**	**Account Name**	**Investment**	**Depreciation**	**Cost of Money**	**Income Tax**	**Ad Valorem**	**Maintenance**	**Total Capital Costs**
4	**Loop (2 wire)**				cD*(AP p7 cA)/12	cD*(AP p7 cB)/12	cD*(AP p7 cC)/12	cD*(AP p7 cD)/12	cD*(AP p7 cE)/12	sum(cE:cI)
5	2111	20C	Land	0.30	0.0000000	0.0024415	0.0009233	0.0002179	0.0005655	0.0041482
6	2121	110C	Building	11.63	0.0250160	0.0725353	0.0274302	0.0083442	0.0216567	0.1549824
7	2212	377C	Digital Switch	29.72	0.2697344	0.1125516	0.0425629	0.0213308	0.0518586	0.4980383
8	2232.2	257C	Pair Gain—Digital	187.13	1.7109206	0.7088132	0.2680474	0.1343055	0.1843231	3.0064098
9	2411	1C	Poles	17.46	0.1783307	0.0536761	0.0202983	0.0125307	0.0472256	0.3120614
10	2421.11,.21	52C	Aerial Cbl Metallic	33.24	0.2914504	0.1506449	0.0569684	0.0238607	0.3643405	0.8872649
11	2421.11	42C	Aerial Drop	14.23	0.1247941	0.0645036	0.0243929	0.0102167	0.1560044	0.3799117
12	2422.11,.21	5C	UG Cbl Metallic	46.58	0.3531493	0.2181397	0.0824925	0.0334286	0.0937446	0.7809548
13	2422.12,.22	85C	UG Cbl Nonmetallic	10.09	0.0594652	0.0475419	0.0179786	0.0072398	0.0059660	0.1381915
14	2423.11,.21	45C	Buried Cbl Metallic	628.02	3.1873095	2.9861907	1.1292688	0.4507432	2.4972546	10.2507667
15	2423.11	35C	Buried Drop	80.83	0.4102417	0.3843555	0.1453493	0.0580156	0.3214241	1.3193862
16	2423.12,.22	845C	Buried Cbl Nonmetallic	149.40	0.7582556	0.7104098	0.2686512	0.1072311	0.1402282	1.9847759
17	2426.1	62C	Intrabuilding Cbl., Exch., Metallic	14.02	0.0732657	0.0682164	0.0257970	0.0100653	0.0272170	0.2045614
18	2431	3C	Aerial Wire	0.66	0.0150432	0.0050339	0.0019037	0.0004729	0.0005491	0.0230028
19	2441	4C	Conduit System	69.48	0.1241512	0.3740231	0.1414419	0.0498660	0.0321807	0.7216629
20			**Total**	**1292.79**	**7.58**	**5.96**	**2.25**	**0.93**	**3.94**	**$ 20.67**
21	**Feeder (2 wire)**									
22	2111	20C	Land	0.30	0.0000000	0.0024415	0.0009233	0.0002179	0.0005655	0.0041482
23	2121	110C	Building	11.63	0.0250160	0.0725353	0.0274302	0.0083442	0.0216567	0.1549824
24	2212	377C	Digital Switch	29.72	0.2697344	0.1125516	0.0425629	0.0213308	0.0518586	0.4980383
25	2232.2	257C	Pair Gain—Digital	187.13	1.7109206	0.7088132	0.2680474	0.1343055	0.1843231	3.0064098
26	2411	1C	Poles	0.08	0.0008372	0.0002520	0.0000953	0.0000588	0.0002217	0.0014650
27	2421.11,.21	52C	Aerial Cbl Metallic	0.16	0.0013953	0.0007212	0.0002727	0.0001142	0.0017443	0.0042478
28	2422.11,.21	5C	UG Cbl Metallic	41.86	0.3173578	0.1960313	0.0741319	0.0300406	0.0842436	0.7018053
29	2422.12,.22	85C	UG Cbl Nonmetallic	10.09	0.0594652	0.0475419	0.0179786	0.0072398	0.0059660	0.1381915
30	2423.11,.21	45C	Buried Cbl Metallic	2.06	0.0104661	0.0098057	0.0037081	0.0014801	0.0082002	0.0336601
31	2423.12,.22	845C	Buried Cbl Nonmetallic	149.40	0.7582556	0.7104098	0.2686512	0.1072311	0.1402282	1.9847759
32	2441	4C	Conduit System	69.48	0.1241512	0.3740231	0.1414419	0.0498660	0.0321807	0.7216629
33			**Total**	**501.90**	**3.28**	**2.24**	**0.85**	**0.36**	**0.53**	**$ 7.25**
34	**Distribution (2 wire)**									
35	2411	1C	Poles	17.38	0.1774935	0.0534241	0.0202031	0.0124718	0.0470039	0.3105964
36	2421.11,.21	52C	Aerial Cbl Metallic	33.09	0.2900550	0.1499237	0.0566957	0.0237465	0.3625962	0.8830170
37	2421.11	42C	Aerial Drop	14.23	0.1247941	0.0645036	0.0243929	0.0102167	0.1560044	0.3799117
38	2422.11,.21	5C	UG Cbl Metallic	4.72	0.0357916	0.0221084	0.0083606	0.0033880	0.0095010	0.0791495
39	2423.11,.21	45C	Buried Cbl Metallic	625.95	3.1768434	2.9763850	1.1255607	0.4492631	2.4890544	10.2171066
40	2423.11	35C	Buried Drop	80.83	0.4102417	0.3843555	0.1453493	0.0580156	0.3214241	1.3193862
41	2426.1	62C	Intrabuilding Cbl., Exch., Metallic	14.02	0.0732657	0.0682164	0.0257970	0.0100653	0.0272170	0.2045614
42	2431	3C	Aerial Wire	0.66	0.0150432	0.0050339	0.0019037	0.0004729	0.0005491	0.0230028
43			**Total**	**790.89**	**4.30**	**3.72**	**1.41**	**0.57**	**3.41**	**$ 13.42**
44	**Investment Sources**									
45	Land= (AP p12 D10) * 377C + (AP p12 E10) * (57C+257C+357C+357CS)						Building = (AP p12 B10) * 377C + (AP p12 C10) * (57C+257C+357C+357CS)			
46	Unbundled Loop = sA p9 cD-I							Billing = AP p10 F21		

Section A - Unbundled Loop
Loop Zone 3- Investment Cost 2W

	A	B	C	D	E	F	G	H	I	J
1	Qwest Defaults 7/20/01 10:04:18 AM									
2	South Dakota				**Wire Center Zone 3 Unbundled Loop**					
3	**Acct**	**FRC**	**Account Name**	**Investment**	**Depreciation**	**Cost of Money**	**Income Tax**	**Ad Valorem**	**Maintenance**	**Total Capital Costs**
4	**Loop (2 wire)**				cD*(AP p7 cA)/12	cD*(AP p7 cB)/12	cD*(AP p7 cC)/12	cD*(AP p7 cD)/12	cD*(AP p7 cE)/12	sum(cE:cI)
5	2111	20C	Land	0.43	0.0000000	0.0034816	0.0013166	0.0003107	0.0008064	0.0059154
6	2121	110C	Building	16.58	0.0356707	0.1034292	0.0391132	0.0118982	0.0308806	0.2209920
7	2212	377C	Digital Switch	29.72	0.2697344	0.1125516	0.0425629	0.0213308	0.0518586	0.4980383
8	2232.2	257C	Pair Gain—Digital	279.51	2.5555813	1.0587456	0.4003791	0.2006105	0.2753212	4.4906377
9	2411	1C	Poles	23.65	0.2415893	0.0727164	0.0274987	0.0169756	0.0639777	0.4227576
10	2421.11,.21	52C	Aerial Cbl Metallic	43.98	0.3855827	0.1993000	0.0753680	0.0315672	0.4820147	1.1738326
11	2421.11	42C	Aerial Drop	17.57	0.1540352	0.0796177	0.0301085	0.0126107	0.1925585	0.4689306
12	2422.11,.21	5C	UG Cbl Metallic	54.41	0.4125522	0.2548328	0.0963685	0.0390516	0.1095133	0.9123184
13	2422.12,.22	85C	UG Cbl Nonmetallic	7.64	0.0450365	0.0360063	0.0136163	0.0054831	0.0045184	0.1046605
14	2423.11,.21	45C	Buried Cbl Metallic	751.16	3.8122931	3.5717379	1.3507015	0.5391271	2.9869287	12.2607883
15	2423.11	35C	Buried Drop	98.17	0.4982397	0.4668009	0.1765271	0.0704601	0.3903704	1.6023983
16	2423.12,.22	845C	Buried Cbl Nonmetallic	446.89	2.2680363	2.1249235	0.8035689	0.3207413	0.4194398	5.9367097
17	2426.1	62C	Intrabuilding Cbl., Exch., Metallic	10.27	0.0536785	0.0499791	0.0189003	0.0073744	0.0199407	0.1498730
18	2431	3C	Aerial Wire	1.95	0.0444785	0.0148839	0.0056286	0.0013981	0.0016236	0.0680128
19	2441	4C	Conduit System	77.69	0.1388224	0.4182221	0.1581564	0.0557587	0.0359836	0.8069432
20			**Total**	**1859.62**	**10.92**	**8.57**	**3.24**	**1.33**	**5.07**	**$ 29.12**
21	**Feeder (2 wire)**									
22	2111	20C	Land	0.43	0.0000000	0.0034816	0.0013166	0.0003107	0.0008064	0.0059154
23	2121	110C	Building	16.58	0.0356707	0.1034292	0.0391132	0.0118982	0.0308806	0.2209920
24	2212	377C	Digital Switch	29.72	0.2697344	0.1125516	0.0425629	0.0213308	0.0518586	0.4980383
25	2232.2	257C	Pair Gain—Digital	279.51	2.5555813	1.0587456	0.4003791	0.2006105	0.2753212	4.4906377
26	2411	1C	Poles	0.49	0.0050076	0.0015072	0.0005700	0.0003519	0.0013261	0.0087627
27	2421.11,.21	52C	Aerial Cbl Metallic	0.95	0.0083462	0.0043140	0.0016314	0.0006833	0.0104335	0.0254083
28	2422.11,.21	5C	UG Cbl Metallic	50.77	0.3849399	0.2377767	0.0899185	0.0364379	0.1021835	0.8512565
29	2422.12,.22	85C	UG Cbl Nonmetallic	7.64	0.0450365	0.0360063	0.0136163	0.0054831	0.0045184	0.1046605
30	2423.11,.21	45C	Buried Cbl Metallic	17.10	0.0867667	0.0812917	0.0307416	0.0122704	0.0679817	0.2790521
31	2423.12,.22	845C	Buried Cbl Nonmetallic	446.89	2.2680363	2.1249235	0.8035689	0.3207413	0.4194398	5.9367097
32	2441	4C	Conduit System	77.69	0.1388224	0.4182221	0.1581564	0.0557587	0.0359836	0.8069432
33			**Total**	**927.76**	**5.80**	**4.18**	**1.58**	**0.67**	**1.00**	**$ 13.23**
34	**Distribution (2 wire)**									
35	2411	1C	Poles	23.16	0.2365817	0.0712091	0.0269287	0.0166238	0.0626516	0.4139949
36	2421.11,.21	52C	Aerial Cbl Metallic	43.03	0.3772365	0.1949860	0.0737366	0.0308839	0.4715812	1.1484243
37	2421.11	42C	Aerial Drop	17.57	0.1540352	0.0796177	0.0301085	0.0126107	0.1925585	0.4689306
38	2422.11,.21	5C	UG Cbl Metallic	3.64	0.0276123	0.0170561	0.0064500	0.0026137	0.0073298	0.0610619
39	2423.11,.21	45C	Buried Cbl Metallic	734.07	3.7255263	3.4904461	1.3199599	0.5268568	2.9189471	11.9817362
40	2423.11	35C	Buried Drop	98.17	0.4982397	0.4668009	0.1765271	0.0704601	0.3903704	1.6023983
41	2426.1	62C	Intrabuilding Cbl., Exch., Metallic	10.27	0.0536785	0.0499791	0.0189003	0.0073744	0.0199407	0.1498730
42	2431	3C	Aerial Wire	1.95	0.0444785	0.0148839	0.0056286	0.0013981	0.0016236	0.0680128
43			**Total**	**931.86**	**5.12**	**4.38**	**1.66**	**0.67**	**4.07**	**$ 15.89**
44	**Investment Sources**									
45	Land= (AP p12 D10) * 377C + (AP p12 E10) * (57C+257C+357C+357CS)						Building = (AP p12 B10) * 377C + (AP p12 C10) * (57C+257C+357C+357CS)			
46	Unbundled Loop = sA p9 cD-I							Billing = AP p10 F21		

South Dakota
Qwest Defaults 7/20/01 10:04:18 AM

2-Wire Unbundled Loop Cost Summary by Zones

Office Name		Statewide Average	Wire Center Zone	Wire Center Zone	Wire Center Zone	Wire Center Zone	Wire Center Zone
Zone			1	2	3	4	5
Total Loop Cost Calculations							
Investments by Account (From Wire Center Loop Costs or Loop Length Zone Data)	FRC						
Poles	1C	$19.08	$12.63	$17.46	$23.65	$0.00	$0.00
Aerial Cbl Metallic	52C	$35.88	$24.32	$33.24	$43.98	$0.00	$0.00
Aerial Wire	3C	$1.16	$0.20	$0.66	$1.95	$0.00	$0.00
Conduit System	4C	$71.22	$61.73	$69.48	$77.69	$0.00	$0.00
UG Cbl Metallic	5C	$51.24	$49.10	$46.58	$54.41	$0.00	$0.00
Buried Cbl Metallic	45C	$647.56	$490.33	$628.02	$751.16	$0.00	$0.00
Intrabuilding Cbl., Exch., Metallic	62C	$13.61	$18.81	$14.02	$10.27	$0.00	$0.00
UG Cbl Nonmetallic	85C	$6.98	$3.86	$10.09	$7.64	$0.00	$0.00
Pair Gain—Digital	257C	$207.23	$101.79	$187.13	$279.51	$0.00	$0.00
Buried Cbl Nonmetallic	845C	$260.30	$26.87	$149.40	$446.89	$0.00	$0.00
Buried Drop	35C	$84.31	$63.84	$80.83	$98.17	$0.00	$0.00
Aerial Drop	42C	$14.94	$11.08	$14.23	$17.57	$0.00	$0.00
Digital Switch	377c	$29.72	$29.72	$29.72	$29.72	$0.00	$0.00
Land	20C	$0.33	$0.18	$0.30	$0.43	$0.00	$0.00
Building	110C	$12.70	$7.05	$11.63	$16.58	$0.00	$0.00
General Purpose Comp. (Billing)	361C	$0.0001	$0.0001	$0.0001	$0.0001	$0.0000	$0.0000
Total Loop Investment		**$1,456.25**	**$901.53**	**$1,292.79**	**$1,859.62**	**$0.00**	**$0.00**
Investment Cost Calculation							
Depreciation		$8.52	$5.21	$7.58	$10.92	$0.00	$0.00
Cost of Money		$6.72	$4.18	$5.96	$8.57	$0.00	$0.00
Income Tax		$2.54	$1.58	$2.25	$3.24	$0.00	$0.00
Ad Valorem		$1.05	$0.65	$0.93	$1.33	$0.00	$0.00
Maintenance		$4.21	$2.98	$3.94	$5.07	$0.00	$0.00
Total Capital Costs		$23.04	$14.60	$20.67	$29.12	$0.00	$0.00
Development of Total Product Costs							
Element Specific Expenses		$0.0165	$0.0165	$0.0165	$0.0165	$0.0000	$0.0000
Direct Costs		$23.90	$15.47	$21.53	$29.99	$0.00	$0.00
TELRIC		$29.57	$21.13	$27.20	$35.65	$0.00	$0.00
Common		$1.34	$1.34	$1.34	$1.34	$0.00	$0.00
Total Loop TELRIC + Common		**$30.90**	**$22.47**	**$28.53**	**$36.99**	**$0.00**	**$0.00**
Feeder Cost Calculations							
Investments by Account	FRC						
Poles	1C	$0.29	$0.10	$0.08	$0.49	$0.00	$0.00
Aerial Cbl Metallic	52C	$0.56	$0.19	$0.16	$0.95	$0.00	$0.00
Conduit System	4C	$71.22	$61.73	$69.48	$77.69	$0.00	$0.00
UG Cbl Metallic	5C	$46.56	$42.75	$41.86	$50.77	$0.00	$0.00
Buried Cbl Metallic	45C	$9.55	$2.08	$2.06	$17.10	$0.00	$0.00
UG Cbl Nonmetallic	85C	$6.98	$3.86	$10.09	$7.64	$0.00	$0.00
Pair Gain—Digital	257C	$207.23	$101.79	$187.13	$279.51	$0.00	$0.00
Buried Cbl Nonmetallic	845C	$260.30	$26.87	$149.40	$446.89	$0.00	$0.00
Digital Switch	377C	$29.72	$29.72	$29.72	$29.72	$0.00	$0.00
Land	20C	$0.33	$0.18	$0.30	$0.43	$0.00	$0.00
Building	110C	$12.70	$7.05	$11.63	$16.58	$0.00	$0.00
General Purpose Comp. (Billing)	361C	$0.0001	$0.0001	$0.0001	$0.0001	$0.0000	$0.0000
Total Feeder Investment		**$645.44**	**$276.32**	**$501.90**	**$927.76**	**$0.00**	**$0.00**
Investment Cost Calculation							
Depreciation		$4.09	$1.82	$3.28	$5.80	$0.00	$0.00
Cost of Money		$2.90	$1.23	$2.24	$4.18	$0.00	$0.00
Income Tax		$1.10	$0.47	$0.85	$1.58	$0.00	$0.00
Ad Valorem		$0.46	$0.20	$0.36	$0.67	$0.00	$0.00
Maintenance		$0.70	$0.32	$0.53	$1.00	$0.00	$0.00
Total Feeder Capital Costs		$9.25	$4.04	$7.25	$13.23	$0.00	$0.00
Development of Total Product Costs							
Element Specific Expenses		$0.0165	$0.0165	$0.0165	$0.0165	$0.0000	$0.0000
Direct Costs		$9.61	$4.40	$7.61	$13.59	$0.00	$0.00
TELRIC		$11.89	$6.67	$9.88	$15.86	$0.00	$0.00
Common		$0.54	$0.54	$0.54	$0.54	$0.00	$0.00
Feeder TELRIC + Common		**$12.42**	**$7.21**	**$10.42**	**$16.40**	**$0.00**	**$0.00**
Distribution Cost Calculations							
Investments by Account	FRC						
Poles	1C	$18.79	$12.53	$17.38	$23.16	$0.00	$0.00
Aerial Cbl Metallic	52C	$35.32	$24.13	$33.09	$43.03	$0.00	$0.00
Aerial Wire	3C	$1.16	$0.20	$0.66	$1.95	$0.00	$0.00
UG Cbl Metallic	5C	$4.68	$6.35	$4.72	$3.64	$0.00	$0.00
Buried Cbl Metallic	45C	$638.01	$488.26	$625.95	$734.07	$0.00	$0.00
Intrabuilding Cbl., Exch., Metallic	62C	$13.61	$18.81	$14.02	$10.27	$0.00	$0.00
Buried Drop	35C	$84.31	$63.84	$80.83	$98.17	$0.00	$0.00
Aerial Drop	42C	$14.94	$11.08	$14.23	$17.57	$0.00	$0.00
General Purpose Comp. (Billing)	361C	$0.0001	$0.0001	$0.0001	$0.0001	$0.0000	$0.0000
Total Distribution Investment		**$810.81**	**$625.21**	**$790.89**	**$931.86**	**$0.00**	**$0.00**
Investment Cost Calculation							
Depreciation		$4.43	$3.39	$4.30	$5.12	$0.00	$0.00
Cost of Money		$3.82	$2.95	$3.72	$4.38	$0.00	$0.00
Income Tax		$1.44	$1.11	$1.41	$1.66	$0.00	$0.00
Ad Valorem		$0.58	$0.45	$0.57	$0.67	$0.00	$0.00
Maintenance		$3.51	$2.66	$3.41	$4.07	$0.00	$0.00
Total Distribution Capital Costs		$13.78	$10.56	$13.42	$15.89	$0.00	$0.00
Development of Total Product Costs							
Element Specific Expenses		$0.0165	$0.0165	$0.0165	$0.0165	$0.0000	$0.0000
Direct Costs		$14.31	$11.09	$13.94	$16.42	$0.00	$0.00
TELRIC		$17.70	$14.48	$17.33	$19.81	$0.00	$0.00
Common		$0.80	$0.80	$0.80	$0.80	$0.00	$0.00
Distribution TELRIC + Common		**$18.50**	**$15.28**	**$18.13**	**$20.61**	**$0.00**	**$0.00**

South Dakota
Qwest Defaults 7/20/01 10:04:18 AM

4-Wire Unbundled Loop Cost Summary by Zones

Office Name		Statewide Average	Wire Center Zone	Wire Center Zone	Wire Center Zone	Wire Center Zone	Wire Center Zone
Zone			1	2	3	4	5
Total Loop Cost Calculations							
Investments by Account (From Wire Center Loop Costs or Loop Length Zone Data)	FRC						
Poles	1C	$38.15	$25.26	$34.92	$47.30	$0.00	$0.00
Aerial Cbl Metallic	52C	$71.76	$48.64	$66.49	$87.96	$0.00	$0.00
Aerial Wire	3C	$2.32	$0.41	$1.32	$3.90	$0.00	$0.00
Conduit System	4C	$142.43	$123.46	$138.96	$155.38	$0.00	$0.00
UG Cbl Metallic	5C	$102.48	$98.20	$93.15	$108.82	$0.00	$0.00
Buried Cbl Metallic	45C	$1,295.11	$980.67	$1,256.03	$1,502.32	$0.00	$0.00
Intrabuilding Cbl., Exch., Metallic	62C	$27.22	$37.62	$28.05	$20.55	$0.00	$0.00
UG Cbl Nonmetallic	85C	$13.97	$7.73	$20.17	$15.28	$0.00	$0.00
Pair Gain—Digital	257C	$414.45	$203.57	$374.25	$559.02	$0.00	$0.00
Buried Cbl Nonmetallic	845C	$520.59	$53.74	$298.81	$893.77	$0.00	$0.00
Buried Drop	35C	$168.62	$127.68	$161.67	$196.34	$0.00	$0.00
Aerial Drop	42C	$29.88	$22.17	$28.47	$35.14	$0.00	$0.00
Digital Switch	377c	$59.44	$59.44	$59.44	$59.44	$0.00	$0.00
Land	20C	$0.66	$0.37	$0.61	$0.87	$0.00	$0.00
Building	110C	$25.41	$14.10	$23.25	$33.16	$0.00	$0.00
General Purpose Comp. (Billing)	361C	$0.0001	$0.0001	$0.0001	$0.0001	$0.0000	$0.0000
Total Loop Investment		**$2,912.50**	**$1,803.05**	**$2,585.58**	**$3,719.25**	**$0.00**	**$0.00**
Investment Cost Calculation							
Depreciation		$17.04	$10.42	$15.16	$21.83	$0.00	$0.00
Cost of Money		$13.43	$8.36	$11.92	$17.13	$0.00	$0.00
Income Tax		$5.08	$3.16	$4.51	$6.48	$0.00	$0.00
Ad Valorem		$2.09	$1.29	$1.86	$2.67	$0.00	$0.00
Maintenance		$8.42	$5.97	$7.89	$10.13	$0.00	$0.00
Total Capital Costs		$46.07	$29.20	$41.33	$58.25	$0.00	$0.00
Development of Total Product Costs							
Element Specific Expenses		$0.0165	$0.0165	$0.0165	$0.0165	$0.0000	$0.0000
Direct Costs		$47.79	$30.92	$43.05	$59.96	$0.00	$0.00
TELRIC		$59.11	$42.24	$54.37	$71.29	$0.00	$0.00
Common		$2.67	$2.67	$2.67	$2.67	$0.00	$0.00
Total Loop TELRIC + Common		**$61.78**	**$44.91**	**$57.04**	**$73.96**	**$0.00**	**$0.00**
Feeder Cost Calculations							
Investments by Account	FRC						
Poles	1C	$0.58	$0.19	$0.16	$0.98	$0.00	$0.00
Aerial Cbl Metallic	52C	$1.12	$0.38	$0.32	$1.90	$0.00	$0.00
Conduit System	4C	$142.43	$123.46	$138.96	$155.38	$0.00	$0.00
UG Cbl Metallic	5C	$93.12	$85.49	$83.71	$101.54	$0.00	$0.00
Buried Cbl Metallic	45C	$19.10	$4.16	$4.12	$34.19	$0.00	$0.00
UG Cbl Nonmetallic	85C	$13.97	$7.73	$20.17	$15.28	$0.00	$0.00
Pair Gain—Digital	257C	$414.45	$203.57	$374.25	$559.02	$0.00	$0.00
Buried Cbl Nonmetallic	845C	$520.59	$53.74	$298.81	$893.77	$0.00	$0.00
Digital Switch	377C	$59.44	$59.44	$59.44	$59.44	$0.00	$0.00
Land	20C	$0.66	$0.37	$0.61	$0.87	$0.00	$0.00
Building	110C	$25.41	$14.10	$23.25	$33.16	$0.00	$0.00
General Purpose Comp. (Billing)	361C	$0.0001	$0.0001	$0.0001	$0.0001	$0.0000	$0.0000
Total Feeder Investment		**$1,290.87**	**$552.63**	**$1,003.81**	**$1,855.52**	**$0.00**	**$0.00**
Investment Cost Calculation							
Depreciation		$8.18	$3.64	$6.56	$11.60	$0.00	$0.00
Cost of Money		$5.80	$2.47	$4.47	$8.36	$0.00	$0.00
Income Tax		$2.19	$0.93	$1.69	$3.16	$0.00	$0.00
Ad Valorem		$0.93	$0.40	$0.72	$1.33	$0.00	$0.00
Maintenance		$1.40	$0.64	$1.06	$2.00	$0.00	$0.00
Total Feeder Capital Costs		$18.50	$8.08	$14.50	$26.46	$0.00	$0.00
Development of Total Product Costs							
Element Specific Expenses		$0.0165	$0.0165	$0.0165	$0.0165	$0.0000	$0.0000
Direct Costs		$19.20	$8.78	$15.20	$27.16	$0.00	$0.00
TELRIC		$23.75	$13.33	$19.75	$31.71	$0.00	$0.00
Common		$1.07	$1.07	$1.07	$1.07	$0.00	$0.00
Feeder TELRIC + Common		**$24.82**	**$14.40**	**$20.82**	**$32.78**	**$0.00**	**$0.00**
Distribution Cost Calculations							
Investments by Account	FRC						
Poles	1C	$37.57	$25.06	$34.75	$46.32	$0.00	$0.00
Aerial Cbl Metallic	52C	$70.64	$48.26	$66.17	$86.06	$0.00	$0.00
Aerial Wire	3C	$2.32	$0.41	$1.32	$3.90	$0.00	$0.00
UG Cbl Metallic	5C	$9.36	$12.71	$9.44	$7.28	$0.00	$0.00
Buried Cbl Metallic	45C	$1,276.01	$976.51	$1,251.91	$1,466.13	$0.00	$0.00
Intrabuilding Cbl., Exch., Metallic	62C	$27.22	$37.62	$28.05	$20.55	$0.00	$0.00
Buried Drop	35C	$168.62	$127.68	$161.67	$196.34	$0.00	$0.00
Aerial Drop	42C	$29.88	$22.17	$28.47	$35.14	$0.00	$0.00
General Purpose Comp. (Billing)	361C	$0.0001	$0.0001	$0.0001	$0.0001	$0.0000	$0.0000
Total Distribution Investment		**$1,621.63**	**$1,250.42**	**$1,581.78**	**$1,863.73**	**$0.00**	**$0.00**
Investment Cost Calculation							
Depreciation		$8.86	$6.78	$8.61	$10.23	$0.00	$0.00
Cost of Money		$7.63	$5.89	$7.45	$8.77	$0.00	$0.00
Income Tax		$2.89	$2.23	$2.82	$3.32	$0.00	$0.00
Ad Valorem		$1.16	$0.90	$1.14	$1.34	$0.00	$0.00
Maintenance		$7.02	$5.33	$6.83	$8.13	$0.00	$0.00
Total Distribution Capital Costs		$27.57	$21.13	$26.83	$31.79	$0.00	$0.00
Development of Total Product Costs							
Element Specific Expenses		$0.0165	$0.0165	$0.0165	$0.0165	$0.0000	$0.0000
Direct Costs		$28.60	$22.16	$27.87	$32.82	$0.00	$0.00
TELRIC		$35.38	$28.94	$34.65	$39.60	$0.00	$0.00
Common		$1.60	$1.60	$1.60	$1.60	$0.00	$0.00
Distribution TELRIC + Common		**$36.98**	**$30.54**	**$36.24**	**$41.20**	**$0.00**	**$0.00**

Section A - Unbundled Loop
Wire Center Loop Costs 2W

	A	B	C	D	E	F	G	H	I	J
1	South Dakota									
2	Qwest Defaults 7/20/01 10:04:18 AM									
3	2W Wire Center Cost Calculations									
4		Office Name		Aberdeen	Arlington	Belle Fourche	Blackhawk	Cavour	Chamberlain	Colman
5		CLLI		ABRDSDCO	ARTNSDCO	BLFRSDCO	BLHKSDCE	CAVRSDCO	CHBLSDCO	CLMNSDCO
6		Zone		3	3	3	2	3	3	3
7		Lines		21206	1231	3934	3735	296	2349	683
8	**Total Loop Cost Calculations**									
9	Investments by Account (From Loop Module Output or Loop Length Zone Data)		FRC							
10		Poles	1C	$18.23	$64.14	$30.27	$33.23	$7.06	$33.36	$5.62
11		*Aerial Cbl Metallic*	*52C*	*$34.46*	*$110.68*	*$54.52*	$62.09	$13.72	$63.93	$10.90
12		Aerial Wire	3C	$0.94	$13.90	$4.25	$2.44	$0.00	$0.85	$0.00
13		Conduit System	4C	$85.23	$21.11	$104.53	$35.54	$37.14	$18.54	$28.58
14		UG Cbl Metallic	5C	$63.10	$14.35	$74.08	$17.07	$8.04	$13.00	$24.41
15		Buried Cbl Metallic	45C	$630.32	$1,381.35	$817.46	$1,049.24	$279.07	$1,127.19	$204.35
16		Intrabuilding Cbl., Exch., Metallic	62C	$19.10	$10.78	$18.71	$7.51	$2.22	$4.60	$37.18
17		UG Cbl Nonmetallic	85C	$7.31	$4.59	$10.31	$11.41	$18.59	$2.53	$7.63
18		Pair Gain—Digital	257C	$158.67	$755.68	$354.54	$397.65	$3,569.00	$349.64	$914.52
19		Buried Cbl Nonmetallic	845C	$344.78	$1,096.33	$522.49	$426.86	$3,846.21	$392.63	$1,464.11
20		Buried Drop	35C	$78.44	$151.59	$103.47	$125.88	$78.91	$124.57	$32.24
21		Aerial Drop	42C	$14.01	$28.04	$18.81	$22.95	$13.21	$22.64	$5.40
22		Digital Switch	377C	$29.72	$29.72	$29.72	$29.72	$29.72	$29.72	$29.72
23		Land	20C	$0.26	$1.10	$0.54	$0.60	$5.04	$0.53	$1.32
24		*Building*	110C	$10.10	$42.10	$20.60	$22.91	$192.89	$20.34	$50.61
25		General Purpose Comp. (Billing)	361C	$0.0001	$0.0001	$0.0001	$0.0001	$0.0001	$0.0001	$0.0001
27		**Total Loop Investment**		**$1,494.69**	**$3,725.44**	**$2,164.29**	**$2,245.11**	**$8,100.81**	**$2,204.07**	**$2,816.58**
28	Investment Cost Calculation									
29		Depreciation		$8.50	$23.03	$12.84	$13.53	$55.21	$13.15	$18.05
30		Cost of Money		$6.95	$16.94	$9.96	$10.25	$35.35	$10.08	$12.57
31		Income Tax		$2.63	$6.40	$3.77	$3.88	$13.37	$3.81	$4.75
32		Ad Valorem		$1.07	$2.67	$1.55	$1.61	$5.61	$1.58	$2.02
33		Maintenance		$4.16	$9.77	$5.72	$6.66	$9.33	$6.87	$3.70
34		Total Capital Costs		$23.31	$58.81	$33.84	$35.92	$119.07	$35.49	$41.08
35	Development of Total Product Costs									
36		Element Specific Expenses		$0.0165	$0.0165	$0.0165	$0.0165	$0.0165	$0.0165	$0.0165
37		Direct Costs		$24.18	$59.68	$34.70	$36.79	$119.94	$36.36	$41.95
38		TELRIC		$29.84	$65.34	$40.37	$42.45	$125.60	$42.02	$47.61
39		Common		$1.34	$1.34	$1.34	$1.34	$1.34	$1.34	$1.34
40	**Total Loop TELRIC + Common**			**$31.17**	**$66.68**	**$41.70**	**$43.79**	**$126.94**	**$43.36**	**$48.95**
41	**Feeder Cost Calculations**									
42	Investments by Account		FRC							
43		Poles	1C	$0.00	$1.12	$0.86	$0.50	$4.73	$3.01	$4.01
44		Aerial Cbl Metallic	52C	$0.00	$2.17	$1.67	$0.98	$9.19	$5.84	$7.78
45		Conduit System	4C	$85.23	$21.11	$104.53	$35.54	$37.14	$18.54	$28.58
46		UG Cbl Metallic	5C	$56.87	$11.06	$68.27	$14.60	$7.99	$11.35	$13.43
47		Buried Cbl Metallic	45C	$0.00	$75.48	$19.67	$17.89	$182.62	$69.06	$104.26
48		UG Cbl Nonmetallic	85C	$7.31	$4.59	$10.31	$11.41	$18.59	$2.53	$7.63
49		Pair Gain—Digital	257C	$158.67	$755.68	$354.54	$397.65	$3,569.00	$349.64	$914.52
50		Buried Cbl Nonmetallic	845C	$344.78	$1,096.33	$522.49	$426.86	$3,846.21	$392.63	$1,464.11
51		Digital Switch	377C	$29.72	$29.72	$29.72	$29.72	$29.72	$29.72	$29.72
52		Land	20C	$0.26	$1.10	$0.54	$0.60	$5.04	$0.53	$1.32
53		Building	110C	$10.10	$42.10	$20.60	$22.91	$192.89	$20.34	$50.61
54		General Purpose Comp. (Billing)	361C	$0.0001	$0.0001	$0.0001	$0.0001	$0.0001	$0.0001	$0.0001
56		**Total Feeder Investment**		**$692.95**	**$2,040.47**	**$1,133.19**	**$968.67**	**$7,903.11**	**$903.18**	**$2,625.97**
57	Investment Cost Calculation									
58		Depreciation		$4.12	$13.40	$7.10	$6.47	$54.13	$6.07	$17.01
59		Cost of Money		$3.18	$9.02	$5.11	$4.20	$34.41	$3.96	$11.66
60		Income Tax		$1.20	$3.41	$1.93	$1.59	$13.01	$1.50	$4.41
61		Ad Valorem		$0.50	$1.46	$0.81	$0.69	$5.67	$0.65	$1.88
62		Maintenance		$0.71	$2.27	$1.22	$1.02	$8.43	$1.18	$2.98
63		Total Feeder Capital Costs		$9.70	$29.56	$16.17	$13.97	$115.66	$13.36	$37.94
64	Development of Total Product Costs									
65		Element Specific Expenses		$0.0165	$0.0165	$0.0165	$0.0165	$0.0165	$0.0165	$0.0165
66		Direct Costs		$10.06	$29.92	$16.53	$14.33	$116.02	$13.72	$38.30
67		TELRIC		$12.34	$32.19	$18.81	$16.60	$118.29	$16.00	$40.58
68		Common		$0.54	$0.54	$0.54	$0.54	$0.54	$0.54	$0.54
69	**Feeder TELRIC + Common**			**$12.88**	**$32.73**	**$19.34**	**$17.14**	**$118.83**	**$16.54**	**$41.11**
70	**Distribution Cost Calculations**									
71	Investments by Account		FRC							
72		Poles	1C	$18.23	$63.02	$29.41	$32.72	$2.33	$30.35	$1.61
73		Aerial Cbl Metallic	52C	$34.46	$108.49	$52.86	$61.11	$4.53	$58.09	$3.12
74		Aerial Wire	3C	$0.94	$13.90	$4.25	$2.44	$0.00	$0.85	$0.00
75		UG Cbl Metallic	5C	$6.23	$3.29	$5.80	$2.47	$0.05	$1.66	$10.98
76		Buried Cbl Metallic	45C	$630.32	$1,305.87	$797.79	$1,031.38	$96.46	$1,058.13	$100.09
77		Intrabuilding Cbl., Exch., Metallic	62C	$19.10	$10.78	$18.71	$7.51	$2.22	$4.60	$37.18
78		Buried Drop	35C	$78.44	$151.59	$103.47	$125.88	$78.91	$124.57	$32.24
79		Aerial Drop	42C	$14.01	$28.04	$18.81	$22.95	$13.21	$22.64	$5.40
80		General Purpose Comp. (Billing)	361C	$0.0001	$0.0001	$0.0001	$0.0001	$0.0001	$0.0001	$0.0001
81		**Total Distribution Investment**		**$801.74**	**$1,684.97**	**$1,031.09**	**$1,286.45**	**$197.70**	**$1,300.89**	**$190.61**
82	Investment Cost Calculation									
83		Depreciation		$4.38	$9.64	$5.74	$7.06	$1.08	$7.08	$1.04
84		Cost of Money		$3.78	$7.92	$4.85	$6.05	$0.93	$6.12	$0.91
85		Income Tax		$1.43	$2.99	$1.83	$2.29	$0.35	$2.31	$0.34
86		Ad Valorem		$0.58	$1.21	$0.74	$0.92	$0.14	$0.93	$0.14
87		Maintenance		$3.45	$7.50	$4.50	$5.63	$0.90	$5.68	$0.72
88		Total Distribution Capital Costs		$13.60	$29.26	$17.67	$21.95	$3.41	$22.13	$3.14
89	Development of Total Product Costs									
90		Element Specific Expenses		$0.0165	$0.0165	$0.0165	$0.0165	$0.0165	$0.0165	$0.0165
91		Direct Costs		$14.13	$29.78	$18.19	$22.48	$3.94	$22.65	$3.87
92		TELRIC		$17.52	$33.17	$21.58	$25.87	$7.33	$26.04	$7.06
93		Common		$0.80	$0.80	$0.80	$0.80	$0.80	$0.80	$0.80
94	**Distribution TELRIC + Common**			**$18.32**	**$33.97**	**$22.38**	**$26.67**	**$8.13**	**$26.84**	**$7.86**

Section A - Unbundled Loop
Wire Center Loop Costs 2W

	A	B	C	K	L	M	N	O	P	Q	R
1	South Dakota										
2	Qwest Defaults 7/20/01 10:04:18 AM										
3	**2W Wire Center Cost Calculations**										
4		**Office Name**		**Canton**	**Deadwood**	**Desmet**	**Elk Point**	**Flandreau**	**Ft Pierre**	**Hill City**	**Harrisburg**
5		CLLI		CNTNSDCO	DDWDSDCO	DESMSDCO	ELPNSDCO	FLNDSDCO	FTPRSDCE	HLCYSDCO	HRBGSDCO
6		Zone		3	3	3	3	3	3	3	1
7		Lines		2477	2680	1189	1466	2214	1498	1755	1009
8	**Total Loop Cost Calculations**										
9	Investments by Account (From Loop Module Output or Loop Length Zone Data)		FRC								
10		Poles	1C	$23.39	$27.11	$40.58	$30.27	$64.02	$38.35	$50.32	$24.92
11		Aerial Cbl Metallic	52C	$43.71	$49.77	$75.00	$56.36	$110.46	$71.35	$89.92	$47.62
12		Aerial Wire	3C	$1.72	$2.88	$3.80	$2.41	$13.86	$3.12	$7.79	$0.77
13		Conduit System	4C	$21.07	$77.57	$22.34	$21.01	$18.22	$22.14	$11.79	$9.12
14		UG Cbl Metallic	5C	$17.70	$43.29	$12.61	$12.76	$15.52	$13.27	$5.59	$8.05
15		Buried Cbl Metallic	45C	$762.29	$802.31	$1,263.62	$1,040.96	$1,326.19	$1,204.69	$1,271.90	$859.39
16		Intrabuilding Cbl., Exch., Metallic	62C	$14.93	$4.65	$0.69	$1.63	$14.47	$0.54	$0.64	$17.76
17		UG Cbl Nonmetallic	85C	$2.71	$15.90	$4.38	$3.75	$2.62	$3.57	$3.47	$3.81
18		Pair Gain---Digital	257C	$259.93	$452.32	$761.82	$593.32	$493.20	$328.44	$1,015.50	$604.27
19		Buried Cbl Nonmetallic	845C	$369.36	$683.47	$844.22	$753.31	$660.63	$589.10	$1,380.90	$567.64
20		Buried Drop	35C	$103.30	$124.08	$147.37	$111.64	$99.18	$153.14	$162.53	$101.81
21		Aerial Drop	42C	$18.71	$22.36	$26.96	$19.77	$17.68	$28.12	$29.80	$18.65
22		Digital Switch	377C	$29.72	$29.72	$29.72	$29.72	$29.72	$29.72	$29.72	$29.72
23		Land	20C	$0.41	$0.67	$1.11	$0.87	$0.73	$0.50	$1.46	$0.89
24		Building	110C	$15.53	$25.84	$42.43	$33.40	$28.03	$19.20	$56.03	$33.98
25		General Purpose Comp. (Billing)	361C	$0.0001	$0.0001	$0.0001	$0.0001	$0.0001	$0.0001	$0.0001	$0.0001
27		**Total Loop Investment**		**$1,684.48**	**$2,361.96**	**$3,276.64**	**$2,711.20**	**$2,894.52**	**$2,505.26**	**$4,117.36**	**$2,328.41**
28	Investment Cost Calculation										
29		Depreciation		$10.04	$14.19	$20.33	$16.84	$17.76	$14.69	$25.79	$14.67
30		Cost of Money		$7.72	$10.80	$14.81	$12.29	$13.22	$11.53	$18.57	$10.46
31		Income Tax		$2.92	$4.08	$5.60	$4.65	$5.00	$4.36	$7.02	$3.96
32		Ad Valorem		$1.21	$1.70	$2.35	$1.95	$2.08	$1.80	$2.96	$1.67
33		Maintenance		$4.95	$5.88	$8.56	$6.95	$8.54	$7.60	$9.63	$5.92
34		Total Capital Costs		$26.84	$36.65	$51.66	$42.47	$46.59	$39.99	$63.98	$36.68
35	Development of Total Product Costs										
36		Element Specific Expenses		$0.0165	$0.0165	$0.0165	$0.0165	$0.0165	$0.0165	$0.0165	$0.0165
37		Direct Costs		$27.70	$37.51	$52.52	$43.34	$47.46	$40.85	$64.84	$37.55
38		TELRIC		$33.37	$43.18	$58.19	$48.00	$53.12	$46.52	$70.51	$43.21
39		Common		$1.34	$1.34	$1.34	$1.34	$1.34	$1.34	$1.34	$1.34
40	**Total Loop TELRIC + Common**			**$34.70**	**$44.51**	**$59.52**	**$50.34**	**$54.46**	**$47.85**	**$71.84**	**$44.55**
41	**Feeder Cost Calculations**										
42	Investments by Account		FRC								
43		Poles	1C	$1.23	$1.20	$0.52	$1.99	$5.31	$1.96	$0.74	$1.02
44		Aerial Cbl Metallic	52C	$2.39	$2.33	$1.02	$3.86	$10.30	$3.80	$1.44	$1.98
45		Conduit System	4C	$21.07	$77.57	$22.34	$21.01	$18.22	$22.14	$11.79	$9.12
46		UG Cbl Metallic	5C	$13.07	$41.67	$12.22	$11.89	$11.01	$12.95	$5.18	$2.78
47		Buried Cbl Metallic	45C	$51.44	$34.31	$73.40	$143.89	$144.93	$101.13	$13.72	$41.92
48		UG Cbl Nonmetallic	85C	$2.71	$15.90	$4.38	$3.75	$2.62	$3.57	$3.47	$3.81
49		Pair Gain---Digital	257C	$259.93	$452.32	$761.82	$593.32	$493.20	$328.44	$1,015.50	$604.27
50		Buried Cbl Nonmetallic	845C	$369.36	$683.47	$844.22	$753.31	$660.63	$589.10	$1,380.90	$567.64
51		Digital Switch	377C	$29.72	$29.72	$29.72	$29.72	$29.72	$29.72	$29.72	$29.72
52		Land	20C	$0.41	$0.67	$1.11	$0.87	$0.73	$0.50	$1.46	$0.89
53		Building	110C	$15.53	$25.84	$42.43	$33.40	$28.03	$19.20	$56.03	$33.98
54		General Purpose Comp. (Billing)	361C	$0.0001	$0.0001	$0.0001	$0.0001	$0.0001	$0.0001	$0.0001	$0.0001
56		**Total Feeder Investment**		**$766.85**	**$1,366.02**	**$1,793.18**	**$1,597.02**	**$1,404.68**	**$1,112.52**	**$2,519.93**	**$1,297.14**
57	Investment Cost Calculation										
58		Depreciation		$5.00	$8.68	$12.16	$10.52	$9.20	$7.03	$16.85	$9.05
59		Cost of Money		$3.40	$6.11	$7.84	$7.05	$6.22	$4.98	$11.06	$5.61
60		Income Tax		$1.29	$2.31	$2.96	$2.67	$2.35	$1.88	$4.18	$2.12
61		Ad Valorem		$0.55	$0.98	$1.29	$1.15	$1.01	$0.80	$1.81	$0.93
62		Maintenance		$0.96	$1.48	$2.02	$2.06	$1.95	$1.45	$2.55	$1.45
63		Total Feeder Capital Costs		$11.19	$19.56	$26.27	$23.45	$20.73	$16.15	$36.46	$19.16
64	Development of Total Product Costs										
65		Element Specific Expenses		$0.0165	$0.0165	$0.0165	$0.0165	$0.0165	$0.0165	$0.0165	$0.0165
66		Direct Costs		$11.55	$19.92	$26.62	$23.81	$21.08	$16.51	$36.82	$19.52
67		TELRIC		$13.83	$22.20	$28.90	$26.09	$23.36	$18.78	$39.09	$21.80
68		Common		$0.54	$0.54	$0.54	$0.54	$0.54	$0.54	$0.54	$0.54
69	**Feeder TELRIC + Common**			**$14.37**	**$22.74**	**$29.44**	**$26.62**	**$23.90**	**$19.32**	**$39.63**	**$22.33**
70	**Distribution Cost Calculations**										
71	Investments by Account		FRC								
72		Poles	1C	$22.16	$25.91	$40.05	$28.28	$58.71	$36.39	$49.58	$23.90
73		Aerial Cbl Metallic	52C	$41.32	$47.44	$73.98	$52.52	$100.16	$67.55	$88.49	$45.64
74		Aerial Wire	3C	$1.72	$2.88	$3.80	$2.41	$13.86	$3.12	$7.79	$0.77
75		UG Cbl Metallic	5C	$4.63	$1.62	$0.39	$0.86	$4.51	$0.32	$0.41	$5.27
76		Buried Cbl Metallic	45C	$710.88	$768.00	$1,190.21	$897.07	$1,181.26	$1,103.56	$1,258.19	$817.47
77		Intrabuilding Cbl., Exch., Metallic	62C	$14.93	$4.65	$0.69	$1.63	$14.47	$0.54	$0.64	$17.76
78		Buried Drop	35C	$103.30	$124.08	$147.37	$111.64	$99.18	$153.14	$162.53	$101.81
79		Aerial Drop	42C	$18.71	$22.36	$26.96	$19.77	$17.68	$28.12	$29.80	$18.65
80		General Purpose Comp. (Billing)	361C	$0.0001	$0.0001	$0.0001	$0.0001	$0.0001	$0.0001	$0.0001	$0.0001
81		**Total Distribution Investment**		**$917.64**	**$996.94**	**$1,483.46**	**$1,114.18**	**$1,489.83**	**$1,392.74**	**$1,597.42**	**$1,031.27**
82	Investment Cost Calculation										
83		Depreciation		$5.04	$5.51	$8.18	$6.11	$8.56	$7.66	$8.94	$5.62
84		Cost of Money		$4.32	$4.69	$6.97	$5.24	$7.00	$6.55	$7.51	$4.85
85		Income Tax		$1.63	$1.77	$2.64	$1.98	$2.65	$2.48	$2.84	$1.84
86		Ad Valorem		$0.66	$0.72	$1.06	$0.80	$1.07	$1.00	$1.15	$0.74
87		Maintenance		$4.00	$4.40	$6.54	$4.89	$6.59	$6.15	$7.09	$4.47
88		Total Distribution Capital Costs		$15.64	$17.08	$25.39	$19.02	$25.86	$23.84	$27.52	$17.52
89	Development of Total Product Costs										
90		Element Specific Expenses		$0.0165	$0.0165	$0.0165	$0.0165	$0.0165	$0.0165	$0.0165	$0.0165
91		Direct Costs		$16.17	$17.61	$25.92	$19.55	$26.39	$24.36	$28.05	$18.05
92		TELRIC		$19.56	$21.00	$29.31	$22.94	$29.78	$27.75	$31.44	$21.44
93		Common		$0.80	$0.80	$0.80	$0.80	$0.80	$0.80	$0.80	$0.80
94	**Distribution TELRIC + Common**			**$20.36**	**$21.80**	**$30.11**	**$23.74**	**$30.58**	**$28.55**	**$32.24**	**$22.24**

Section A - Unbundled Loop
Wire Center Loop Costs 2W

	A	B	C	S	T	U	V	W	X	Y	Z
1	South Dakota										
2	Qwest Defaults 7/20/01 10:04:18 AM										
3	**2W Wire Center Cost Calculations**										
4		**Office Name**		**Huron**	**Iroquois**	**Lead**	**Lake Preston**	**Mcintosh**	**Madison**	**Milbank**	**Miller**
5		CLLI		HURNSDCO	IRQSSDCO	LEADSDCO	LKPRSDCO	MCINSDCO	MDSNSDCE	MLBNSDCO	MLLRSDCO
6		Zone		3	3	3	3	3	3	3	3
7		Lines		9839	381	3088	712	293	4891	3647	1740
8	**Total Loop Cost Calculations**										
9	Investments by Account (From Loop Module Output or Loop Length Zone Data)		FRC								
10		Poles	1C	$17.64	$31.08	$28.34	$50.62	$22.36	$12.84	$30.38	$23.91
11		Aerial Cbl Metallic	52C	$33.23	$60.38	$51.29	$94.12	$43.41	$24.75	$57.15	$46.43
12		Aerial Wire	3C	$1.03	$0.00	$3.75	$4.00	$0.00	$0.18	$1.84	$0.00
13		Conduit System	4C	$84.29	$37.27	$105.74	$29.48	$47.13	$97.37	$77.23	$17.84
14		UG Cbl Metallic	5C	$61.97	$12.55	$66.80	$14.45	$25.32	$65.47	$46.66	$10.99
15		Buried Cbl Metallic	45C	$600.41	$1,099.60	$801.57	$1,484.67	$854.49	$492.91	$984.07	$935.74
16		Intrabuilding Cbl., Exch., Metallic	62C	$13.48	$0.65	$9.23	$0.00	$13.94	$11.25	$1.58	$1.42
17		UG Cbl Nonmetallic	85C	$5.96	$14.83	$12.55	$7.32	$13.83	$11.73	$11.69	$3.16
18		Pair Gain—Digital	257C	$159.91	$2,083.76	$375.05	$1,305.36	$1,894.50	$224.15	$346.46	$969.59
19		Buried Cbl Nonmetallic	845C	$187.62	$2,125.24	$611.54	$1,544.49	$2,762.49	$327.54	$659.23	$970.71
20		Buried Drop	35C	$91.02	$137.59	$108.24	$168.71	$63.48	$73.44	$136.61	$113.29
21		Aerial Drop	42C	$16.26	$25.16	$19.36	$31.32	$10.63	$12.73	$24.89	$20.22
22		Digital Switch	377C	$29.72	$29.72	$29.72	$29.72	$29.72	$29.72	$29.72	$29.72
23		Land	20C	$0.27	$2.96	$0.57	$1.87	$2.69	$0.36	$0.53	$1.40
24		Building	110C	$10.17	$113.29	$21.70	$71.56	$103.14	$13.61	$20.17	$53.57
25		General Purpose Comp. (Billing)	361C	$0.0001	$0.0001	$0.0001	$0.0001	$0.0001	$0.0001	$0.0001	$0.0001
26											
27		**Total Loop Investment**		**$1,312.97**	**$5,774.10**	**$2,248.46**	**$4,837.59**	**$6,887.15**	**$1,398.06**	**$2,428.21**	**$3,197.99**
28	Investment Cost Calculation										
29		Depreciation		$7.58	$37.95	$13.30	$30.50	$37.63	$8.15	$14.15	$20.47
30		Cost of Money		$6.09	$25.54	$10.34	$21.74	$26.27	$6.45	$11.19	$14.28
31		Income Tax		$2.30	$9.66	$3.91	$8.22	$9.94	$2.44	$4.23	$5.40
32		Ad Valorem		$0.94	$4.14	$1.61	$3.47	$4.23	$1.00	$1.74	$2.30
33		Maintenance		$3.94	$10.31	$5.72	$11.06	$9.12	$3.51	$6.63	$7.02
34		Total Capital Costs		$20.85	$87.60	$34.89	$74.99	$87.18	$21.55	$37.95	$49.47
35	Development of Total Product Costs										
36		Element Specific Expenses		$0.0165	$0.0165	$0.0165	$0.0165	$0.0165	$0.0165	$0.0165	$0.0165
37		Direct Costs		$21.72	$88.47	$35.76	$75.86	$88.05	$22.42	$38.82	$50.33
38		TELRIC		$27.38	$94.13	$41.42	$81.52	$93.71	$28.08	$44.49	$56.00
39		Common		$1.34	$1.34	$1.34	$1.34	$1.34	$1.34	$1.34	$1.34
40	**Total Loop TELRIC + Common**			**$28.72**	**$95.47**	**$42.76**	**$82.86**	**$95.04**	**$29.42**	**$45.82**	**$57.33**
41	**Feeder Cost Calculations**										
42	Investments by Account		FRC								
43		Poles	1C	$0.00	$3.78	$0.00	$4.02	$9.79	$0.00	$0.00	$2.49
44		Aerial Cbl Metallic	52C	$0.00	$7.35	$0.00	$7.81	$19.01	$0.00	$0.00	$4.83
45		Conduit System	4C	$84.29	$37.27	$105.74	$29.48	$47.13	$97.37	$77.23	$17.84
46		UG Cbl Metallic	5C	$57.62	$12.19	$66.76	$14.45	$20.77	$61.29	$46.01	$10.12
47		Buried Cbl Metallic	45C	$0.00	$103.06	$0.00	$104.12	$335.12	$0.00	$0.00	$116.66
48		UG Cbl Nonmetallic	85C	$5.96	$14.83	$12.55	$7.32	$13.83	$11.73	$11.69	$3.16
49		Pair Gain—Digital	257C	$159.91	$2,083.76	$375.05	$1,305.36	$1,894.50	$224.15	$346.46	$969.59
50		Buried Cbl Nonmetallic	845C	$187.62	$2,125.24	$611.54	$1,544.49	$2,762.49	$327.54	$659.23	$970.71
51		Digital Switch	377C	$29.72	$29.72	$29.72	$29.72	$29.72	$29.72	$29.72	$29.72
52		Land	20C	$0.27	$2.96	$0.57	$1.87	$2.69	$0.36	$0.53	$1.40
53		Building	110C	$10.17	$113.29	$21.70	$71.56	$103.14	$13.61	$20.17	$53.57
54		General Purpose Comp. (Billing)	361C	$0.0001	$0.0001	$0.0001	$0.0001	$0.0001	$0.0001	$0.0001	$0.0001
55											
56		**Total Feeder Investment**		**$535.56**	**$4,533.44**	**$1,223.64**	**$3,120.21**	**$5,238.20**	**$765.76**	**$1,191.03**	**$2,180.08**
57	Investment Cost Calculation										
58		Depreciation		$3.33	$31.22	$7.62	$21.04	$34.12	$4.72	$7.38	$14.96
59		Cost of Money		$2.43	$19.70	$5.52	$13.67	$23.22	$3.47	$5.38	$9.49
60		Income Tax		$0.92	$7.45	$2.09	$5.17	$8.78	$1.31	$2.03	$3.59
61		Ad Valorem		$0.38	$3.25	$0.88	$2.24	$3.76	$0.55	$0.85	$1.56
62		Maintenance		$0.56	$4.87	$1.23	$3.48	$6.35	$0.78	$1.19	$2.57
63		Total Feeder Capital Costs		$7.62	$66.50	$17.33	$45.60	$76.23	$10.84	$16.83	$32.18
64	Development of Total Product Costs										
65		Element Specific Expenses		$0.0165	$0.0165	$0.0165	$0.0165	$0.0165	$0.0165	$0.0165	$0.0165
66		Direct Costs		$7.98	$66.86	$17.69	$45.95	$76.58	$11.19	$17.19	$32.54
67		TELRIC		$10.26	$69.14	$19.97	$48.23	$78.86	$13.47	$19.47	$34.82
68		Common		$0.54	$0.54	$0.54	$0.54	$0.54	$0.54	$0.54	$0.54
69	**Feeder TELRIC + Common**			**$10.79**	**$69.67**	**$20.51**	**$48.77**	**$79.40**	**$14.01**	**$20.00**	**$35.35**
70	**Distribution Cost Calculations**										
71	Investments by Account		FRC								
72		Poles	1C	$17.64	$27.31	$28.34	$46.50	$12.57	$12.84	$30.38	$21.42
73		Aerial Cbl Metallic	52C	$33.23	$53.04	$51.29	$86.30	$24.41	$24.75	$57.15	$41.60
74		Aerial Wire	3C	$1.03	$0.00	$3.75	$4.00	$0.00	$0.18	$1.84	$0.00
75		UG Cbl Metallic	5C	$4.35	$0.37	$3.04	$0.00	$4.55	$4.19	$0.65	$0.87
76		Buried Cbl Metallic	45C	$600.41	$996.54	$801.57	$1,380.55	$519.38	$492.91	$984.07	$819.08
77		Intrabuilding Cbl., Exch., Metallic	62C	$13.48	$0.65	$9.23	$0.00	$13.94	$11.25	$1.58	$1.42
78		Buried Drop	35C	$91.02	$137.59	$108.24	$168.71	$63.48	$73.44	$136.61	$113.29
79		Aerial Drop	42C	$16.26	$25.16	$19.36	$31.32	$10.63	$12.73	$24.89	$20.22
80		General Purpose Comp. (Billing)	361C	$0.0001	$0.0001	$0.0001	$0.0001	$0.0001	$0.0001	$0.0001	$0.0001
81		**Total Distribution Investment**		**$777.42**	**$1,240.66**	**$1,024.83**	**$1,717.38**	**$648.96**	**$632.29**	**$1,237.18**	**$1,017.91**
82	Investment Cost Calculation										
83		Depreciation		$4.25	$6.73	$5.68	$9.46	$3.50	$3.43	$6.77	$5.51
84		Cost of Money		$3.66	$5.84	$4.82	$8.07	$3.06	$2.98	$5.82	$4.79
85		Income Tax		$1.38	$2.21	$1.82	$3.05	$1.16	$1.13	$2.20	$1.81
86		Ad Valorem		$0.56	$0.89	$0.74	$1.23	$0.47	$0.45	$0.89	$0.73
87		Maintenance		$3.38	$5.44	$4.50	$7.58	$2.77	$2.73	$5.44	$4.45
88		Total Distribution Capital Costs		$13.23	$21.10	$17.56	$29.40	$10.95	$10.71	$21.12	$17.29
89	Development of Total Product Costs										
90		Element Specific Expenses		$0.0165	$0.0165	$0.0165	$0.0165	$0.0165	$0.0165	$0.0165	$0.0165
91		Direct Costs		$13.75	$21.63	$18.08	$29.92	$11.48	$11.24	$21.65	$17.81
92		TELRIC		$17.14	$25.02	$21.48	$33.31	$14.87	$14.63	$25.04	$21.20
93		Common		$0.80	$0.80	$0.80	$0.80	$0.80	$0.80	$0.80	$0.80
94	**Distribution TELRIC + Common**			**$17.94**	**$25.82**	**$22.27**	**$34.11**	**$15.67**	**$15.43**	**$25.84**	**$22.00**

Section A - Unbundled Loop
Wire Center Loop Costs 2W

	A	B	C	AA	AB	AC	AD	AE	AF	AG	AH	AI
1	South Dakota											
2	Qwest Defaults 7/20/01 10:04:18 AM											
3	**2W Wire Center Cost Calculations**											
4		**Office Name**		**Morristown**	**Mitchell**	**Pierre**	**Redfield**	**Rapid City**	**Rapid Valley**	**Spearfish**	**Sturgis**	**Sioux Falls Main**
5		CLLI		MRTWSDCO	MTCHSDCO	PIRRSDCO	RDFDSDCO	RPCYSDCO	RPVYSDCO	SPRFSDCO	STRGSDCO	SXFLSDCO
6		Zone		3	3	3	3	2	2	3	3	1
7		Lines		229	10858	13380	2827	47779	3295	7936	5485	70261
8	**Total Loop Cost Calculations**											
9	Investments by Account (From Loop Module Output or Loop Length Zone Data)		FRC									
10		Poles	1C	$17.51	$16.38	$18.68	$64.82	$15.29	$24.84	$25.98	$27.86	$10.28
11		Aerial Cbl Metallic	52C	$34.01	$31.58	$35.54	$115.08	$29.17	$47.63	$49.24	$52.85	$19.90
12		Aerial Wire	3C	$0.00	$0.22	$0.73	$10.80	$0.53	$0.80	$1.20	$1.34	$0.06
13		Conduit System	4C	$54.15	$83.65	$83.27	$131.14	$70.38	$131.19	$70.99	$79.75	$57.42
14		UG Cbl Metallic	5C	$25.28	$63.10	$61.64	$79.51	$48.34	$86.00	$46.09	$54.14	$47.05
15		Buried Cbl Metallic	45C	$707.78	$625.16	$659.54	$1,566.35	$563.32	$876.12	$885.01	$969.06	$419.22
16		Intrabuilding Cbl., Exch., Metallic	62C	$7.61	$11.36	$8.82	$0.00	$15.95	$1.11	$1.26	$1.38	$21.05
17		UG Cbl Nonmetallic	85C	$17.06	$10.83	$5.01	$18.58	$9.69	$13.25	$6.09	$6.69	$3.46
18		Pair Gain—Digital	257C	$3,066.06	$154.93	$136.06	$833.16	$149.98	$252.79	$180.95	$326.95	$91.20
19		Buried Cbl Nonmetallic	845C	$3,041.00	$410.12	$180.63	$1,168.57	$95.29	$365.03	$295.40	$416.69	$7.85
20		Buried Drop	35C	$71.97	$80.04	$88.42	$186.71	$72.17	$126.52	$122.25	$117.53	$54.37
21		Aerial Drop	42C	$12.05	$13.88	$15.72	$34.66	$12.58	$22.85	$21.96	$21.01	$9.30
22		Digital Switch	377c	$29.72	$29.72	$29.72	$29.72	$29.72	$29.72	$29.72	$29.72	$29.72
23		Land	20C	$4.33	$0.26	$0.23	$1.21	$0.25	$0.40	$0.29	$0.50	$0.17
24		Building	110C	$165.94	$9.90	$8.89	$46.25	$9.63	$15.15	$11.29	$19.12	$6.48
25		General Purpose Comp. (Billing)	361C	$0.0001	$0.0001	$0.0001	$0.0001	$0.0001	$0.0001	$0.0001	$0.0001	$0.0001
27		**Total Loop Investment**		**$7,254.46**	**$1,551.13**	**$1,332.89**	**$4,286.56**	**$1,122.30**	**$1,993.48**	**$1,749.73**	**$2,124.79**	**$777.53**
28	Investment Cost Calculation											
29		Depreciation		$49.06	$8.71	$7.59	$25.98	$6.54	$11.42	$10.01	$12.49	$4.51
30		Cost of Money		$31.75	$7.23	$6.20	$19.59	$5.19	$9.25	$8.12	$9.77	$3.60
31		Income Tax		$12.01	$2.73	$2.34	$7.41	$1.96	$3.50	$3.07	$3.70	$1.36
32		Ad Valorem		$5.21	$1.11	$0.96	$3.08	$0.81	$1.43	$1.26	$1.53	$0.56
33		Maintenance		$10.00	$4.15	$4.14	$11.09	$3.50	$5.74	$5.52	$6.16	$2.56
34		Total Capital Costs		$108.03	$23.94	$21.24	$67.14	$17.89	$31.34	$27.98	$33.65	$12.59
35	Development of Total Product Costs											
36		Element Specific Expenses		$0.0165	$0.0165	$0.0165	$0.0165	$0.0165	$0.0165	$0.0165	$0.0165	$0.0165
37		Direct Costs		$108.89	$24.81	$22.10	$68.00	$18.86	$32.21	$28.84	$34.52	$13.46
38		TELRIC		$114.56	$30.47	$27.77	$73.67	$24.52	$37.87	$34.51	$40.18	$19.12
39		Common		$1.34	$1.34	$1.34	$1.34	$1.34	$1.34	$1.34	$1.34	$1.34
40	**Total Loop TELRIC + Common**			**$115.89**	**$31.81**	**$29.10**	**$75.00**	**$25.86**	**$39.20**	**$35.84**	**$41.52**	**$20.46**
41	**Feeder Cost Calculations**											
42	Investments by Account		FRC									
43		Poles	1C	$3.41	$0.00	$0.00	$0.00	$0.00	$0.00	$0.33	$0.18	$0.00
44		Aerial Cbl Metallic	52C	$6.62	$0.00	$0.00	$0.00	$0.00	$0.00	$0.64	$0.34	$0.00
45		Conduit System	4C	$54.15	$83.65	$83.27	$131.14	$70.38	$131.19	$70.99	$79.75	$57.42
46		UG Cbl Metallic	5C	$22.60	$59.43	$57.87	$79.51	$42.98	$85.35	$47.36	$53.38	$39.91
47		Buried Cbl Metallic	45C	$132.61	$0.00	$0.00	$0.00	$0.00	$0.00	$7.04	$23.41	$0.00
48		UG Cbl Nonmetallic	85C	$17.06	$10.83	$5.01	$18.58	$9.69	$13.25	$6.09	$6.69	$3.46
49		Pair Gain—Digital	257C	$3,066.06	$154.93	$136.06	$833.16	$149.98	$252.79	$180.95	$326.95	$91.20
50		Buried Cbl Nonmetallic	845C	$3,041.00	$410.12	$180.63	$1,168.57	$95.29	$365.03	$295.40	$416.69	$7.85
51		Digital Switch	377C	$29.72	$29.72	$29.72	$29.72	$29.72	$29.72	$29.72	$29.72	$29.72
52		Land	20C	$4.33	$0.26	$0.23	$1.21	$0.25	$0.40	$0.29	$0.50	$0.17
53		Building	110C	$165.94	$9.90	$8.89	$46.25	$9.63	$15.15	$11.29	$19.12	$6.48
54		General Purpose Comp. (Billing)	361C	$0.0001	$0.0001	$0.0001	$0.0001	$0.0001	$0.0001	$0.0001	$0.0001	$0.0001
56		**Total Feeder Investment**		**$6,543.49**	**$768.84**	**$601.69**	**$2,308.13**	**$407.92**	**$892.87**	**$660.12**	**$956.72**	**$236.21**
57	Investment Cost Calculation											
58		Depreciation		$45.23	$4.47	$3.07	$14.88	$2.65	$5.43	$4.01	$6.13	$1.56
59		Cost of Money		$28.41	$3.55	$2.29	$10.29	$1.82	$4.07	$2.95	$4.28	$1.05
60		Income Tax		$10.74	$1.34	$0.86	$3.89	$0.69	$1.54	$1.11	$1.62	$0.40
61		Ad Valorem		$4.70	$0.55	$0.36	$1.66	$0.29	$0.64	$0.47	$0.69	$0.17
62		Maintenance		$6.93	$0.78	$0.53	$2.29	$0.43	$0.91	$0.70	$1.05	$0.27
63		Total Feeder Capital Costs		$96.00	$10.69	$7.11	$32.99	$5.89	$12.59	$9.24	$13.76	$3.47
64	Development of Total Product Costs											
65		Element Specific Expenses		$0.0165	$0.0165	$0.0165	$0.0165	$0.0165	$0.0165	$0.0165	$0.0165	$0.0165
66		Direct Costs		$98.36	$11.05	$7.47	$33.35	$8.25	$12.95	$9.60	$14.12	$3.83
67		TELRIC		$98.84	$13.32	$9.74	$35.63	$8.53	$15.23	$11.87	$16.39	$6.10
68		Common		$0.54	$0.54	$0.54	$0.54	$0.54	$0.54	$0.54	$0.54	$0.54
69	**Feeder TELRIC + Common**			**$99.18**	**$13.86**	**$10.28**	**$36.16**	**$9.06**	**$15.76**	**$12.41**	**$16.93**	**$6.64**
70	**Distribution Cost Calculations**											
71	Investments by Account		FRC									
72		Poles	1C	$14.10	$16.38	$18.68	$64.82	$15.29	$24.84	$25.64	$27.78	$10.28
73		Aerial Cbl Metallic	52C	$27.39	$31.58	$35.54	$115.08	$29.17	$47.63	$48.60	$52.61	$19.90
74		Aerial Wire	3C	$0.00	$0.22	$0.73	$10.80	$0.53	$0.80	$1.20	$1.34	$0.06
75		UG Cbl Metallic	5C	$2.68	$3.67	$3.76	$0.00	$5.36	$0.65	$0.72	$0.76	$7.14
76		Buried Cbl Metallic	45C	$575.17	$625.16	$659.54	$1,566.35	$563.32	$876.12	$877.97	$945.66	$419.22
77		Intrabuilding Cbl., Exch., Metallic	62C	$7.61	$11.36	$8.82	$0.00	$15.95	$1.11	$1.26	$1.38	$21.05
78		Buried Drop	35C	$71.97	$80.04	$88.42	$186.71	$72.17	$126.52	$122.25	$117.53	$54.37
79		Aerial Drop	42C	$12.05	$13.88	$15.72	$34.66	$12.58	$22.85	$21.96	$21.01	$9.30
80		General Purpose Comp. (Billing)	361C	$0.0001	$0.0001	$0.0001	$0.0001	$0.0001	$0.0001	$0.0001	$0.0001	$0.0001
81		**Total Distribution Investment**		**$710.97**	**$782.29**	**$831.20**	**$1,978.43**	**$714.38**	**$1,100.60**	**$1,099.61**	**$1,168.07**	**$541.32**
82	Investment Cost Calculation											
83		Depreciation		$3.83	$4.24	$4.53	$11.12	$3.88	$5.89	$6.00	$6.37	$2.93
84		Cost of Money		$3.35	$3.88	$3.91	$9.30	$3.36	$5.18	$5.17	$5.49	$2.55
85		Income Tax		$1.27	$1.39	$1.48	$3.52	$1.27	$1.96	$1.96	$2.08	$0.97
86		Ad Valorem		$0.51	$0.56	$0.60	$1.42	$0.51	$0.78	$0.79	$0.84	$0.39
87		Maintenance		$3.06	$3.36	$3.61	$8.80	$3.07	$4.83	$4.82	$5.11	$2.29
88		Total Distribution Capital Costs		$12.02	$13.25	$14.13	$34.15	$12.10	$18.75	$18.74	$19.89	$9.12
89	Development of Total Product Costs											
90		Element Specific Expenses		$0.0165	$0.0165	$0.0165	$0.0165	$0.0165	$0.0165	$0.0165	$0.0165	$0.0165
91		Direct Costs		$12.55	$13.78	$14.65	$34.67	$12.63	$19.27	$19.27	$20.42	$9.65
92		TELRIC		$15.94	$17.17	$18.04	$38.06	$16.02	$22.66	$22.66	$23.81	$13.04
93		Common		$0.80	$0.80	$0.80	$0.80	$0.80	$0.80	$0.80	$0.80	$0.80
94	**Distribution TELRIC + Common**			**$16.74**	**$17.97**	**$18.84**	**$38.86**	**$16.82**	**$23.46**	**$23.46**	**$24.61**	**$13.84**

Section A - Unbundled Loop
Wire Center Loop Costs 2W

	A	B	C	AJ	AK	AL	AM	AN	AO	AP	AQ	AR
1	South Dakota											
2	Qwest Defaults 7/20/01 10:04:18 AM											
3	**2W Wire Center Cost Calculations**											
4		**Office Name**		**Sioux Falls Southeast**	**Sioux Falls Southwest**	**Tea**	**Timber Lake**	**Volga**	**Vermillion**	**Whitewood**	**Warwick**	**Watertown**
5		CLLI		SXFLSDSE	SXFLSDSW	TEA-SDCO	TMLKSDCO	VOLGSDCO	VRMLSDCO	WHWDSDCO	WRWKSDCO	WTWSDCO
6		Zone		1	1	1	3	3	3	3	2	3
7		Lines		3867	13218	1332	556	1298	8788	647	4104	15903
8	**Total Loop Cost Calculations**											
9	Investments by Account (From Loop Module Output or Loop Length Zone Data)		FRC									
10		Poles	1C	$21.32	$19.70	$31.65	$17.74	$38.66	$15.21	$48.21	$22.33	$20.32
11		Aerial Cbl Metallic	52C	$39.26	$38.19	$58.63	$34.45	$71.75	$27.68	$86.42	$42.92	$37.56
12		Aerial Wire	3C	$2.15	$0.07	$2.83	$0.00	$3.32	$1.86	$7.19	$0.44	$1.90
13		Conduit System	4C	$4.52	$110.10	$15.18	$29.52	$20.33	$70.49	$29.83	$40.32	$88.35
14		UG Cbl Metallic	5C	$6.06	$79.75	$9.15	$19.61	$11.75	$55.16	$13.85	$21.28	$62.69
15		Buried Cbl Metallic	45C	$670.79	$750.57	$855.28	$594.47	$1,076.89	$453.61	$1,254.45	$798.62	$638.58
16		Intrabuilding Cbl., Exch., Metallic	62C	$19.13	$8.68	$0.94	$23.49	$0.37	$16.15	$1.04	$7.86	$10.58
17		UG Cbl Nonmetallic	85C	$3.15	$6.39	$2.40	$9.37	$3.46	$4.97	$8.96	$11.01	$7.66
18		Pair Gain—Digital	257C	$214.42	$71.64	$251.87	$1,737.42	$799.02	$95.17	$801.13	$375.34	$136.87
19		Buried Cbl Nonmetallic	845C	$58.90	$60.96	$189.27	$2,023.35	$1,157.96	$186.59	$1,015.69	$353.71	$342.12
20		Buried Drop	35C	$77.08	$100.50	$132.70	$50.69	$155.52	$66.82	$149.96	$104.04	$91.10
21		Aerial Drop	42C	$13.61	$17.85	$24.05	$8.49	$28.63	$11.97	$27.25	$18.60	$16.16
22		Digital Switch	377C	$29.72	$29.72	$29.72	$29.72	$29.72	$29.72	$29.72	$29.72	$29.72
23		Land	20C	$0.34	$0.14	$0.39	$2.47	$1.16	$0.17	$1.16	$0.57	$0.23
24		Building	110C	$13.09	$5.44	$15.10	$94.72	$44.42	$6.70	$44.54	$21.71	$8.93
25		General Purpose Comp. (Billing)	361C	$0.0001	$0.0001	$0.0001	$0.0001	$0.0001	$0.0001	$0.0001	$0.0001	$0.0001
26												
27		**Total Loop Investment**		**$1,173.55**	**$1,299.80**	**$1,619.14**	**$4,675.51**	**$3,442.96**	**$1,042.26**	**$3,619.19**	**$1,848.47**	**$1,492.80**
28	Investment Cost Calculation											
29		Depreciation		$7.26	$7.14	$9.81	$30.84	$21.30	$5.95	$21.84	$11.24	$8.44
30		Cost of Money		$5.33	$6.11	$7.40	$20.65	$15.57	$4.86	$15.93	$8.41	$6.98
31		Income Tax		$2.01	$2.31	$2.80	$7.81	$5.89	$1.84	$6.02	$3.18	$2.63
32		Ad Valorem		$0.84	$0.83	$1.16	$3.36	$2.47	$0.75	$2.53	$1.33	$1.07
33		Maintenance		$4.01	$4.47	$5.46	$7.03	$8.15	$3.06	$8.89	$5.20	$4.26
34		**Total Capital Costs**		$19.45	$20.97	$26.62	$69.69	$53.39	$16.45	$55.22	$29.36	$23.37
35	Development of Total Product Costs											
36		Element Specific Expenses		$0.0165	$0.0165	$0.0165	$0.0165	$0.0165	$0.0165	$0.0165	$0.0165	$0.0165
37		Direct Costs		$20.32	$21.84	$27.49	$70.55	$54.26	$17.31	$56.08	$30.22	$24.23
38		TELRIC		$25.98	$27.50	$33.15	$76.22	$59.92	$22.98	$61.75	$35.89	$29.90
39		Common		$1.34	$1.34	$1.34	$1.34	$1.34	$1.34	$1.34	$1.34	$1.34
40	**Total Loop TELRIC + Common**			**$27.32**	**$28.84**	**$34.49**	**$77.55**	**$61.25**	**$24.31**	**$63.08**	**$37.22**	**$31.23**
41	**Feeder Cost Calculations**											
42	Investments by Account		FRC									
43		Poles	1C	$0.00	$0.00	$5.73	$7.49	$8.80	$0.00	$2.43	$0.72	$0.00
44		Aerial Cbl Metallic	52C	$0.00	$0.00	$11.13	$14.54	$13.21	$0.00	$4.72	$1.39	$0.00
45		Conduit System	4C	$4.52	$110.10	$15.18	$29.52	$20.33	$70.49	$29.83	$40.32	$88.35
46		UG Cbl Metallic	5C	$0.00	$76.78	$8.94	$12.24	$11.69	$48.21	$12.93	$18.67	$58.86
47		Buried Cbl Metallic	45C	$0.00	$0.00	$108.13	$159.24	$161.55	$8.15	$70.92	$13.32	$0.00
48		UG Cbl Nonmetallic	85C	$3.15	$6.39	$2.40	$9.37	$3.46	$4.97	$8.96	$11.01	$7.66
49		Pair Gain—Digital	257C	$214.42	$71.64	$251.87	$1,737.42	$799.02	$95.17	$801.13	$375.34	$136.87
50		Buried Cbl Nonmetallic	845C	$58.90	$60.96	$189.27	$2,023.35	$1,157.96	$186.59	$1,015.69	$353.71	$342.12
51		Digital Switch	377C	$29.72	$29.72	$29.72	$29.72	$29.72	$29.72	$29.72	$29.72	$29.72
52		Land	20C	$0.34	$0.14	$0.39	$2.47	$1.16	$0.17	$1.16	$0.57	$0.23
53		Building	110C	$13.09	$5.44	$15.10	$94.72	$44.42	$6.70	$44.54	$21.71	$8.93
54		General Purpose Comp. (Billing)	361C	$0.0001	$0.0001	$0.0001	$0.0001	$0.0001	$0.0001	$0.0001	$0.0001	$0.0001
55												
56		**Total Feeder Investment**		**$324.14**	**$361.17**	**$637.85**	**$4,120.07**	**$2,249.31**	**$460.16**	**$2,022.02**	**$866.48**	**$672.75**
57	Investment Cost Calculation											
58		Depreciation		$2.58	$2.08	$4.38	$27.84	$14.70	$2.66	$13.48	$5.91	$3.93
59		Cost of Money		$1.33	$1.69	$2.78	$18.03	$9.96	$2.07	$8.89	$3.78	$3.10
60		Income Tax		$0.50	$0.64	$1.05	$6.82	$3.77	$0.78	$3.36	$1.43	$1.17
61		Ad Valorem		$0.23	$0.26	$0.46	$2.96	$1.61	$0.32	$1.45	$0.62	$0.48
62		Maintenance		$0.35	$0.40	$1.10	$4.70	$2.85	$0.50	$2.26	$0.93	$0.69
63		**Total Feeder Capital Costs**		$4.99	$5.05	$9.77	$60.35	$32.89	$6.34	$29.45	$12.67	$9.37
64	Development of Total Product Costs											
65		Element Specific Expenses		$0.0165	$0.0165	$0.0165	$0.0165	$0.0165	$0.0165	$0.0165	$0.0165	$0.0165
66		Direct Costs		$5.35	$5.41	$10.13	$60.71	$33.25	$6.70	$29.81	$13.03	$9.73
67		TELRIC		$7.63	$7.69	$12.41	$62.98	$35.53	$8.97	$32.08	$15.31	$12.01
68		Common		$0.54	$0.54	$0.54	$0.54	$0.54	$0.54	$0.54	$0.54	$0.54
69	**Feeder TELRIC + Common**			**$8.17**	**$8.22**	**$12.94**	**$63.52**	**$36.06**	**$9.51**	**$32.62**	**$15.85**	**$12.55**
70	**Distribution Cost Calculations**											
71	Investments by Account		FRC									
72		Poles	1C	$21.32	$19.70	$25.92	$10.25	$31.85	$15.21	$45.78	$21.61	$20.32
73		Aerial Cbl Metallic	52C	$39.26	$38.19	$47.50	$19.91	$58.54	$27.68	$81.71	$41.52	$37.56
74		Aerial Wire	3C	$2.15	$0.07	$2.83	$0.00	$3.32	$1.86	$7.19	$0.44	$1.90
75		UG Cbl Metallic	5C	$6.06	$2.97	$0.21	$7.37	$0.06	$6.95	$0.72	$2.61	$3.83
76		Buried Cbl Metallic	45C	$670.79	$750.57	$747.15	$435.23	$915.34	$445.46	$1,183.53	$785.30	$638.58
77		Intrabuilding Cbl., Exch., Metallic	62C	$19.13	$8.68	$0.94	$23.49	$0.37	$16.15	$1.04	$7.86	$10.58
78		Buried Drop	35C	$77.08	$100.50	$132.70	$50.69	$155.52	$66.82	$149.96	$104.04	$91.10
79		Aerial Drop	42C	$13.61	$17.85	$24.05	$8.49	$28.63	$11.97	$27.25	$18.60	$16.16
80		General Purpose Comp. (Billing)	361C	$0.0001	$0.0001	$0.0001	$0.0001	$0.0001	$0.0001	$0.0001	$0.0001	$0.0001
81		**Total Distribution Investment**		**$849.41**	**$938.63**	**$981.29**	**$565.43**	**$1,193.63**	**$692.09**	**$1,497.17**	**$981.98**	**$820.05**
82	Investment Cost Calculation											
83		Depreciation		$4.67	$5.08	$5.43	$3.00	$6.60	$3.28	$8.37	$5.33	$4.51
84		Cost of Money		$4.00	$4.42	$4.61	$2.62	$5.61	$2.79	$7.04	$4.62	$3.88
85		Income Tax		$1.51	$1.67	$1.75	$0.99	$2.12	$1.05	$2.66	$1.75	$1.46
86		Ad Valorem		$0.61	$0.67	$0.70	$0.40	$0.86	$0.42	$1.07	$0.70	$0.59
87		Maintenance		$3.66	$4.08	$4.36	$2.33	$5.30	$2.56	$6.63	$4.27	$3.58
88		**Total Distribution Capital Costs**		$14.48	$15.92	$16.85	$9.34	$20.50	$10.11	$25.77	$16.68	$13.99
89	Development of Total Product Costs											
90		Element Specific Expenses		$0.0165	$0.0165	$0.0165	$0.0165	$0.0165	$0.0165	$0.0165	$0.0165	$0.0165
91		Direct Costs		$14.98	$16.45	$17.38	$9.86	$21.02	$10.63	$26.30	$17.21	$14.52
92		TELRIC		$18.37	$19.84	$20.77	$13.26	$24.41	$14.02	$29.69	$20.60	$17.91
93		Common		$0.80	$0.80	$0.80	$0.80	$0.80	$0.80	$0.80	$0.80	$0.80
94	**Distribution TELRIC + Common**			**$19.17**	**$20.64**	**$21.57**	**$14.05**	**$25.21**	**$14.82**	**$30.49**	**$21.40**	**$18.71**

Section A - Unbundled Loop
Wire Center Loop Costs 2W

	A	B	C	AS
1	South Dakota			
2	Qwest Defaults 7/20/01 10:04:18 AM			
3	**2W Wire Center Cost Calculations**			
4		**Office Name**		**Yankton**
5		CLLI		YNTNSDCO
6		Zone		3
7		Lines		11736
8	**Total Loop Cost Calculations**			
9	Investments by Account (From Loop Module Output or Loop Length Zone Data)		FRC	
10		Poles	1C	$21.22
11		Aerial Cbl Metallic	52C	$39.96
12		Aerial Wire	3C	$1.25
13		Conduit System	4C	$94.66
14		UG Cbl Metallic	5C	$64.87
15		Buried Cbl Metallic	45C	$718.05
16		Intrabuilding Cbl., Exch., Metallic	62C	$7.10
17		UG Cbl Nonmetallic	85C	$8.92
18		Pair Gain—Digital	257C	$134.30
19		Buried Cbl Nonmetallic	845C	$372.58
20		Buried Drop	35C	$97.62
21		Aerial Drop	42C	$17.31
22		Digital Switch	377c	$28.72
23		Land	20C	$0.23
24		Building	110C	$8.79
25		General Purpose Comp. (Billing)	361C	$0.0001
26				
27		**Total Loop Investment**		**$1,616.69**
28	Investment Cost Calculation			
29		Depreciation		$9.05
30		Cost of Money		$7.55
31		Income Tax		$2.86
32		Ad Valorem		$1.16
33		Maintenance		$4.67
34		Total Capital Costs		$25.29
35	Development of Total Product Costs			
36		Element Specific Expenses		$0.0165
37		Direct Costs		$26.16
38		TELRIC		$31.82
39		Common		$1.34
40	**Total Loop TELRIC + Common**			**$33.16**
41	**Feeder Cost Calculations**			
42	Investments by Account		FRC	
43		Poles	1C	$0.00
44		Aerial Cbl Metallic	52C	$0.00
45		Conduit System	4C	$94.66
46		UG Cbl Metallic	5C	$62.26
47		Buried Cbl Metallic	45C	$0.00
48		UG Cbl Nonmetallic	85C	$8.92
49		Pair Gain—Digital	257C	$134.30
50		Buried Cbl Nonmetallic	845C	$372.58
51		Digital Switch	377C	$28.72
52		Land	20C	$0.23
53		Building	110C	$8.79
54		General Purpose Comp. (Billing)	361C	$0.0001
55				
56		**Total Feeder Investment**		**$711.49**
57	Investment Cost Calculation			
58		Depreciation		$4.10
59		Cost of Money		$3.29
60		Income Tax		$1.25
61		Ad Valorem		$0.51
62		Maintenance		$0.73
63		Total Feeder Capital Costs		$9.88
64	Development of Total Product Costs			
65		Element Specific Expenses		$0.0165
66		Direct Costs		$10.23
67		TELRIC		$12.51
68		Common		$0.54
69	**Feeder TELRIC + Common**			**$13.05**
70	**Distribution Cost Calculations**			
71	Investments by Account		FRC	
72		Poles	1C	$21.22
73		Aerial Cbl Metallic	52C	$39.96
74		Aerial Wire	3C	$1.25
75		UG Cbl Metallic	5C	$2.69
76		Buried Cbl Metallic	45C	$718.05
77		Intrabuilding Cbl., Exch., Metallic	62C	$7.10
78		Buried Drop	35C	$97.62
79		Aerial Drop	42C	$17.31
80		General Purpose Comp. (Billing)	361C	$0.0001
81		**Total Distribution Investment**		**$905.20**
82	Investment Cost Calculation			
83		Depreciation		$4.94
84		Cost of Money		$4.26
85		Income Tax		$1.61
86		Ad Valorem		$0.65
87		Maintenance		$3.85
88		Total Distribution Capital Costs		$15.41
89	Development of Total Product Costs			
90		Element Specific Expenses		$0.0165
91		Direct Costs		$15.94
92		TELRIC		$19.33
93		Common		$0.80
94	**Distribution TELRIC + Common**			**$20.13**

	A	B	C	D	E	F
1	Qwest Defaults 7/20/01 10:04:18 AM					
2			**Unbundled Loop**			
3			**South Dakota**			
4	**Description**	**Default Source**	**Default Value**	**Overrides**	**This Run**	**Instructions**
5				AP p15		
6	Unbundled Loop Grooming Investment 2-Wire	sA p18 G9	$63.80		63.80	Enter unbundled loop grooming investment.
7	Loop Billing and Collection Expense	AP p10 F22	$0.0165		0.0165	Enter billing and collection expense per line.
8	Unbundled Loop Grooming Investment 4-Wire	sA p18 G17	$149.78		149.78	Calculated 4-Wire unbundled loop grooming investment.
9						All Investments are EFI
10	This Run equals Default Value if Overrides is empty					
11	s = section					
12	p = page					
13	c = column					
14	r = row					
15	Upper Case letter with number indicates a cell location, i.e. G40					
16	The spreadsheet shows the Override data entered by the user in ICM's custom input screens. If the user					
17	has input override data, the spreadsheet will determine this and display the override data in the					
18	Overrides column. The this run column will show the Override or the Default Value if no override has					
19	been entered.					
20						

Cell: D8
Comment: Changes in 2-wire unbundled loop grooming will automatically change the 4-wire unbundled loop grooming proportionately.

	A	B	C	D	E	F	G	H
1	**Litespan 2000 Unbundled Loop Grooming Design**							
2								
3	**State:**	**South Dakota**	**2-WIRE**				**Weighted**	
4			**Investment**		**DLC %**		**Cost**	
5					From Loop Grooming Data		cC*cE	
6	**Option 1**	CO Chan & Term	$149.02	H47	0.2595		$38.67	257C
7	**Option 2**	CO Chan & Term	$585.64	H95	0.0429		$25.13	257C
8								
9	**Weighted average demultiplexing investment per DS0**						$63.80	
10								
11								
12			**4-WIRE**				**Weighted**	
13			**Investment**		**DLC %**		**Cost**	
14	**Option 1**	CO Chan & Term	$343.72	H69	0.2595		$89.19	257C
15	**Option 2**	CO Chan & Term	$1,412.05	H118	0.0429		$60.58	257C
16								
17	**Weighted average demultiplexing investment per DS0**						$149.78	
18								
19								
20	**Per Occurrence Investment - Option 1 & 2 weighted by Lines Integrated**							
21								
22		**Option**		**Quantity**	**Option %**	**Investment**	**Wtd Invest**	
23				From Loop Grooming Data	cD/D26	C7 & C6	cE*cF	
24		Option 2		12,692	0.1419	$585.64	$83.09	
25		Option 1		76,761	0.8581	$149.02	$127.88	
26		Total		89,453	1.0000		$210.97	

	A	B	C	D	E	F	G	H
27	**South Dakota**	**LS2000 Unbundled Loop - for use with integrated TR-303 DS1s**						
28	2-WIRE	Option 1						
29	**Parts**				**Quantity**	**Unit Cost**		**Total Cost**
30	**Hardware & Commons for COT TR-008**					From Loop Grooming Data		cE*cF
31	COT 7' Bay Copper Fed				1	12,040.58		$ 12,040.58
32	COT Common Plugs Copper Fed (TR-008)				1	11,710.89		$ 11,710.89
33	COT Channel Bank Common PIE				3	1,567.38		$ 4,702.14
34	CPOTS Channel Units (Quad)				168	285.19		$ 47,912.36
35				Total				$76,365.97
36	**Software & Hardware Option**							
37	TR-303 Generic System Software				1			
38	OMAPS				1			
39				Total cost	System		H31:H33	$28,453.61
40					Channel Units		H34	$47,912.36
41								
42				At fill	System		H39/H71	43,774.78
43					Channel Units		H40/F72	56,367.48
44					Total			100,142.27
45								
46				System Capacity (DS0s)				672
47				Cost per DS0				$149.02
48								
49	4-WIRE	Option 1				From Loop Grooming Data		
50	**Parts**				**Quantity**	**Unit Cost**		**Total Cost**
51	**Hardware & Commons for COT TR-008**							cE*cF
52	COT 7' Bay Copper Fed				1	12,040.58		$ 12,040.58
53	COT Common Plugs Copper Fed (TR-008)				1	11,710.89		$ 11,710.89
54	COT Channel Bank Common PIE				3	1,567.38		$ 4,702.14
55	Universal 4 Wire Dual Card				84	725.68		$ 60,957.13
56				Total				$89,410.74
57	**Software & Hardware Option**							
58	TR-303 Generic System Software				1			
59	OMAPS				1			
60								
61				Total cost	System	H52+H53+H54		$28,453.61
62					Channel Units		H55	$60,957.13
63								
64				At fill	System		H61/F71	43,774.78
65					Channel Units		H62/F72	71,714.27
66					Total			115,489.06
67								
68				System Capacity (DS0s)			4*E55	336
69				Cost per DS0			H66/H68	$343.72
70								
71				System Fill		0.65		
72				Channel Unit Fill		0.85		
73								
74								

	A	B	C	D	E	F	G	H
75	**South Dakota**	**LS2000 Unbundled Loop - for use with integrated TR-008 DS1s**						
76	2-WIRE	Option 2				From Loop Grooming Data		
77	**Parts**				**Quantity**	**Unit Cost**		**Total Cost**
78	**Hardware & Commons for COT TR-008**							cE*cF
79	COT 7' Bay Copper Fed				1	12,040.58		$12,040.58
80	COT Common Plugs Copper Fed (TR-008)				1	11,710.89		$11,710.89
81	COT Channel Bank Common PIE				3	1,567.38		$4,702.14
82	DS1 Channel Units				56	415.74		$23,281.18
83	CPOTS Channel Units (Quad)				26	285.19		$7,415.01
84				Total				$59,149.80
85	**Software & Hardware Option**							
86	TR-303 Generic System Software				1			
87	OMAPS				1			
88	System capacity		672		Total cost	System	H79+H80+H81	$28,453.61
89	Unbundled loop %		0.15			Channel Units	H82+H83	$30,696.19
90	Unbundled loops		101			Total		$59,149.80
91	POTS channel units		26					
92								
93								
94				Working DS0s			C90	101
95				Cost per DS0			H90/H94	$585.64
96								
97								
98								
99	4-WIRE	Option 2				From Loop Grooming Data		
100	**Parts**				**Quantity**	**Unit Cost**		**Total Cost**
101	**Hardware & Commons for COT TR-008**							cE*cF
102	COT 7' Bay Copper Fed				1	12,040.58		$12,040.58
103	COT Common Plugs Copper Fed (TR-008)				1	11,710.89		$11,710.89
104	COT Channel Bank Common PIE				3	1,567.38		$4,702.14
105	DS1 Channel Units				56	415.74		$23,281.18
106	Universal 4 Wire Dual Card				26	725.68		$18,867.68
107				Total				$70,602.47
108	**Software & Hardware Option**							
109	TR-303 Generic System Software				1			
110	OMAPS				1			
111	System capacity		336		Total cost	System	H102+H103+H104	$28,453.61
112	Unbundled loop %		0.15			Channel Units	H105+H106	$42,148.86
113	Unbundled loops		50			Total		$70,602.47
114	POTS channel units		26					
115								
116								
117				Working DS0s			C113	50
118				Cost per DS0			H113/H117	$1,412.05
119								

	A	B	C	D	E	F
1	**Litespan 2000 Unbundled Loop Grooming Design**					
2						
3						
4	**State:**					**South Dakota**
5						
6	**Option 1**	**LS2000 Unbundled Loop - for use with integrated TR-303 DS1s**				
7		DLC%				25.95%
8	**Option 2**	**LS2000 Unbundled Loop - for use with integrated TR-008 DS1s**				
9		DLC%				4.29%
10						
11						
12	**Integrated Loop Demultiplexing Equipment**					
13		7 foot Bay				$12,040.58
14		Cards TR008				$11,710.89
15		Common PIE				$1,567.38
16		Quad Card				$285.19
17		DS1 Card				$415.74
18		4 Wire Card				$725.68
19		Quad ISDN Card				$860.45
20	**Line Quantities**					
21		Total				295,812
22		32 Line				11,051
23		96/192 Line				12,692
24		672/1344 Line				76,761
25		Total Demux				89,453

South Dakota

Qwest Defaults 7/20/01 10:04:18 AM

Feeder Model - 12 Kilofoot crossover

Pairs Per Site - Engineering Standard

Directly Assigned Feeder

CLLI	1C	52C	4C	5C	45C	85C	257C	845C
ABRDSDCO	$0.00	$0.00	$85.23	$56.87	$0.00	$7.31	$158.67	$344.78
ARTNSDCO	$1.12	$2.17	$21.11	$11.06	$75.48	$4.59	$755.68	$1,096.33
BLFRSDCO	$0.86	$1.67	$104.53	$68.27	$19.67	$10.31	$354.54	$522.49
BLHKSDCE	$0.50	$0.98	$35.54	$14.60	$17.89	$11.41	$397.65	$426.86
CAVRSDCO	$4.73	$9.19	$37.14	$7.99	$182.62	$18.59	$3,569.00	$3,846.21
CHBLSDCO	$3.01	$5.84	$18.54	$11.35	$69.06	$2.53	$349.64	$392.63
CLMNSDCO	$4.01	$7.78	$28.58	$13.43	$104.26	$7.63	$914.52	$1,464.11
CNTNSDCO	$1.23	$2.39	$21.07	$13.07	$51.44	$2.71	$259.93	$369.36
DDWDSDCO	$1.20	$2.33	$77.57	$41.67	$34.31	$15.90	$452.32	$683.47
DESMSDCO	$0.52	$1.02	$22.34	$12.22	$73.40	$4.38	$761.82	$844.22
ELPNSDCO	$1.99	$3.86	$21.01	$11.89	$143.89	$3.75	$593.32	$753.31
FLNDSDCO	$5.31	$10.30	$18.22	$11.01	$144.93	$2.62	$493.20	$660.63
FTPRSDCE	$1.96	$3.80	$22.14	$12.95	$101.13	$3.57	$328.44	$589.10
HLCYSDCO	$0.74	$1.44	$11.79	$5.18	$13.72	$3.47	$1,015.50	$1,380.90
HRBGSDCO	$1.02	$1.98	$9.12	$2.78	$41.92	$3.81	$604.27	$567.64
HURNSDCO	$0.00	$0.00	$84.29	$57.62	$0.00	$5.96	$159.91	$187.62
IRQSSDCO	$3.78	$7.35	$37.27	$12.19	$103.06	$14.83	$2,083.76	$2,125.24
LEADSDCO	$0.00	$0.00	$105.74	$66.76	$0.00	$12.55	$375.05	$611.54
LKPRSDCO	$4.02	$7.81	$29.48	$14.45	$104.12	$7.32	$1,305.36	$1,544.49
MCINSDCO	$9.79	$19.01	$47.13	$20.77	$335.12	$13.83	$1,894.50	$2,762.49
MDSNSDCE	$0.00	$0.00	$97.37	$61.29	$0.00	$11.73	$224.15	$327.54
MLBNSDCO	$0.00	$0.00	$77.23	$46.01	$0.00	$11.69	$346.46	$659.23
MLLRSDCO	$2.49	$4.83	$17.84	$10.12	$116.66	$3.16	$969.59	$970.71
MRTWSDCO	$3.41	$6.62	$54.15	$22.60	$132.61	$17.06	$3,066.06	$3,041.00
MTCHSDCO	$0.00	$0.00	$93.65	$59.43	$0.00	$10.83	$154.93	$410.12
PIRRSDCO	$0.00	$0.00	$83.27	$57.87	$0.00	$5.01	$136.06	$180.63
RDFDSDCO	$0.00	$0.00	$131.14	$79.51	$0.00	$18.58	$833.16	$1,168.57
RPCYSDCO	$0.00	$0.00	$70.38	$42.98	$0.00	$9.69	$149.98	$95.29
RPVYSDCO	$0.00	$0.00	$131.19	$85.35	$0.00	$13.25	$252.79	$365.03
SPRFSDCO	$0.33	$0.64	$70.99	$47.36	$7.04	$6.09	$180.95	$295.40
STRGSDCO	$0.18	$0.34	$79.75	$53.38	$23.41	$6.69	$326.95	$416.69
SXFLSDCO	$0.00	$0.00	$57.42	$39.91	$0.00	$3.46	$91.20	$7.85
SXFLSDSE	$0.00	$0.00	$4.52	$0.00	$0.00	$3.15	$214.42	$58.90
SXFLSDSW	$0.00	$0.00	$110.10	$76.78	$0.00	$6.39	$71.64	$60.96
TEA-SDCO	$5.73	$11.13	$15.18	$8.94	$108.13	$2.40	$251.87	$189.27
TMLKSDCO	$7.49	$14.54	$29.52	$12.24	$159.24	$9.37	$1,737.42	$2,023.35
VOLGSDCO	$6.80	$13.21	$20.33	$11.69	$161.55	$3.46	$799.02	$1,157.96
VRMLSDCO	$0.00	$0.00	$70.49	$48.21	$8.15	$4.97	$95.17	$186.59

	A	B	C	D	E	F	G	H	I
1		South Dakota							
2		Qwest Defaults 7/20/01 10:04:18 AM							
3									
4		Feeder Model - 12 Kilofoot crossover							
5									
6		Pairs Per Site - Engineering Standard							
7									
8		**Directly Assigned Feeder**							
9	**CLLI**	**1C**	**52C**	**4C**	**5C**	**45C**	**85C**	**257C**	**845C**
48	WHWDSDCO	$2.43	$4.72	$29.83	$12.93	$70.92	$8.96	$801.13	$1,015.69
49	WRWKSDCO	$0.72	$1.39	$40.32	$18.67	$13.32	$11.01	$375.34	$353.71
50	WTTWSDCO	$0.00	$0.00	$88.35	$58.86	$0.00	$7.66	$136.87	$342.12
51	YNTNSDCO	$0.00	$0.00	$94.66	$62.28	$0.00	$8.92	$134.30	$372.58

South Dakota

Qwest Defaults 7/20/01 10:04:18 AM

	62C	35C	42C
NID Investments	$13.34	$27.24	$4.40

Directly Assigned Distribution

CLLI	1C	52C	3C	5C	45C	62C	35C	42C
ABRDSDCO	$18.23	$34.46	$0.94	$6.23	$630.32	$19.10	$78.44	$14.01
ARTNSDCO	$63.02	$108.49	$13.90	$3.29	$1,305.87	$10.78	$151.59	$28.04
BLFRSDCO	$29.41	$52.86	$4.25	$5.80	$797.79	$18.71	$103.47	$18.81
BLHKSDCE	$32.72	$61.11	$2.44	$2.47	$1,031.36	$7.51	$125.88	$22.95
CAVRSDCO	$2.33	$4.53	$0.00	$0.05	$96.46	$2.22	$78.91	$13.21
CHBLSDCO	$30.35	$58.09	$0.85	$1.66	$1,058.13	$4.60	$124.57	$22.64
CLMNSDCO	$1.61	$3.12	$0.00	$10.98	$100.09	$37.18	$32.24	$5.40
CNTNSDCO	$22.16	$41.32	$1.72	$4.63	$710.86	$14.93	$103.30	$18.71
DDWDSDCO	$25.91	$47.44	$2.88	$1.62	$768.00	$4.65	$124.08	$22.36
DESMSDCO	$40.05	$73.98	$3.80	$0.39	$1,190.21	$0.69	$147.37	$26.96
ELPNSDCO	$28.28	$52.52	$2.41	$0.86	$897.07	$1.63	$111.64	$19.77
FLNDSDCO	$58.71	$100.16	$13.86	$4.51	$1,181.26	$14.47	$99.18	$17.68
FTPRSDCE	$36.39	$67.55	$3.12	$0.32	$1,103.56	$0.54	$153.14	$28.12
HLCYSDCO	$49.58	$88.49	$7.79	$0.41	$1,258.19	$0.64	$162.53	$29.80
HRBGSDCO	$23.90	$45.64	$0.77	$5.27	$817.47	$17.76	$101.81	$18.65
HURNSDCO	$17.64	$33.23	$1.03	$4.35	$600.41	$13.48	$91.02	$16.26
IRQSSDCO	$27.31	$53.04	$0.00	$0.37	$996.54	$0.65	$137.59	$25.16
LEADSDCO	$28.34	$51.29	$3.75	$3.04	$801.57	$9.23	$108.24	$19.36
LKPRSDCO	$46.50	$86.30	$4.00	$0.00	$1,380.55	$0.00	$168.71	$31.32
MCINSDCO	$12.57	$24.41	$0.00	$4.55	$519.38	$13.94	$63.48	$10.63
MDSNSDCE	$12.84	$24.75	$0.18	$4.19	$492.91	$11.25	$73.44	$12.73
MLBNSDCO	$30.38	$57.15	$1.84	$0.65	$984.07	$1.58	$136.61	$24.89
MLLRSDCO	$21.42	$41.60	$0.00	$0.87	$819.08	$1.42	$113.29	$20.22
MRTWSDCO	$14.10	$27.39	$0.00	$2.68	$575.17	$7.61	$71.97	$12.05
MTCHSDCO	$16.38	$31.58	$0.22	$3.67	$625.16	$11.36	$80.04	$13.88
PIRRSDCO	$18.68	$35.54	$0.73	$3.76	$659.54	$8.82	$88.42	$15.72
RDFDSDCO	$64.82	$115.08	$10.80	$0.00	$1,566.35	$0.00	$186.71	$34.66
RPCYSDCO	$15.29	$29.17	$0.53	$5.36	$563.32	$15.95	$72.17	$12.58
RPVYSDCO	$24.94	$47.63	$0.80	$0.65	$876.12	$1.11	$126.52	$22.85
SPRFSDCO	$25.64	$48.60	$1.20	$0.72	$877.97	$1.26	$122.25	$21.96
STRGSDCO	$27.78	$52.61	$1.34	$0.76	$945.66	$1.38	$117.53	$21.01
SXFLSDCO	$10.28	$19.90	$0.06	$7.14	$419.22	$21.05	$54.37	$9.30
SXFLSDSE	$21.32	$39.26	$2.15	$6.06	$670.79	$19.13	$77.08	$13.61
SXFLSDSW	$19.70	$38.19	$0.07	$2.97	$750.57	$8.68	$100.50	$17.95
TEA-SDCO	$25.92	$47.50	$2.83	$0.21	$747.15	$0.94	$132.70	$24.05
TMLKSDCO	$10.25	$19.91	$0.00	$7.37	$435.23	$23.49	$50.69	$8.49
VOLGSDCO	$31.85	$58.54	$3.32	$0.06	$915.34	$0.37	$155.52	$28.63
VRMLSDCO	$15.21	$27.68	$1.86	$6.95	$445.46	$16.15	$66.82	$11.97

	A	J	K	L	M	N	O	P	Q
1		South Dakota							
2		Qwest Defaults 7/20/01 10:04:18 AM							
3									
4							62C	35C	42C
5						NID Investments	$13.34	$27.24	$4.40
6									
7									
8		Directly Assigned Distribution							
9	CLLI	1C	52C	3C	5C	45C	62C	35C	42C
48	WHWDSDCO	$45.78	$81.71	$7.19	$0.72	$1,183.53	$1.04	$149.96	$27.25
49	WRWKSDCO	$21.61	$41.52	$0.44	$2.61	$785.30	$7.86	$104.04	$18.60
50	WTTWSDCO	$20.32	$37.56	$1.90	$3.83	$638.58	$10.58	$91.10	$16.16
51	YNTNSDCO	$21.22	$39.96	$1.25	$2.69	$718.05	$7.10	$97.62	$17.31

South Dakota
Qwest Defaults 7/20/01 10:04:18 AM

CLLI	Number of Loops	Average Length	Percent DLC	Zone	Office Name
ABRDSDCO	21,206	13,730	24%	3	Aberdeen
ARTNSDCO	1,231	24,256	35%	3	Arlington
BLFRSDCO	3,934	14,128	13%	3	Belle Fourche
BLHKSDCE	3,735	41,275	95%	2	Blackhawk
CAVRSDCO	296	38,133	88%	3	Cavour
CHBLSDCO	2,349	11,230	23%	3	Chamberlain
CLMNSDCO	683	14,553	32%	3	Colman
CNTNSDCO	2,477	9,537	14%	3	Canton
DDWDSDCO	2,680	22,070	41%	3	Deadwood
DESMSDCO	1,189	15,324	20%	3	Desmet
ELPNSDCO	1,466	21,641	30%	3	Elk Point
FLNDSDCO	2,214	18,837	23%	3	Flandreau
FTPRSDCE	1,498	10,903	5%	3	Ft Pierre
HLCYSDCO	1,755	31,199	65%	3	Hill City
HRBGSDCO	1,009	27,357	94%	1	Harrisburg
HURNSDCO	9,839	11,202	14%	3	Huron
IRQSSDCO	381	26,660	51%	3	Iroquois
LEADSDCO	3,088	17,920	26%	3	Lead
LKPRSDCO	712	21,704	32%	3	Lake Preston
MCINSDCO	293	36,480	39%	3	Mcintosh
MDSNSDCE	4,891	10,195	15%	3	Madison
MLBNSDCO	3,647	14,767	21%	3	Milbank
MLLRSDCO	1,740	20,923	28%	3	Miller
MRTWSDCO	229	34,078	70%	3	Morristown
MTCHSDCO	10,858	10,431	10%	3	Mitchell
PIRRSDCO	13,380	14,021	36%	3	Pierre
RDFDSDCO	2,827	29,812	32%	3	Redfield
RPCYSDCO	47,779	16,201	51%	2	Rapid City
RPVYSDCO	3,295	12,542	16%	2	Rapid Valley
SPRFSDCO	7,936	11,648	15%	3	Spearfish
STRGSDCO	5,485	15,996	25%	3	Sturgis
SXFLSDCO	70,261	12,014	41%	1	Sioux Falls Main
SXFLSDSE	3,867	32,206	100%	1	Sioux Falls Southeast
SXFLSDSW	13,218	11,771	22%	1	Sioux Falls Southwest
TEA-SDCO	1,332	16,804	44%	1	Tea
TMLKSDCO	556	22,583	34%	3	Timber Lake
VOLGSDCO	1,298	25,985	39%	3	Volga
VRMLSDCO	8,788	8,086	6%	3	Vermillion

	A	R	S	T	U	V
1		South Dakota				
2		Qwest Defaults 7/20/01 10:04:18 AM				
3						
4						
5						
6						
7						
8						
9	CLLI	Number of Loops	Average Length	Percent DLC	Zone	Office Name
48	WHWDSDCO	647	22,601	50%	3	Whitewood
49	WRWKSDCO	4,104	18,783	83%	2	Warwick
50	WTTWSDCO	15,903	13,399	20%	3	Watertown
51	YNTNSDCO	11,736	13,409	15%	3	Yankton

South Dakota
Qwest Defaults 7/20/01 10:04:18 AM

2-Wire Unbundled Loop Cost Summary by Zones

Office Name		Statewide Average	Wire Center Zone	Wire Center Zone	Wire Center Zone	Wire Center Zone	Wire Center Zone
Zone			1	2	3	4	5
Total Loop Cost Calculations							
Investments by Account (From Wire Center Loop Costs or Loop Length Zone Data)	FRC						
Poles	1C	$19.08	$12.63	$17.46	$23.65	$0.00	$0.00
Aerial Cbl Metallic	52C	$35.88	$24.32	$33.24	$43.98	$0.00	$0.00
Aerial Wire	3C	$1.16	$0.20	$0.66	$1.95	$0.00	$0.00
Conduit System	4C	$71.22	$61.73	$69.48	$77.69	$0.00	$0.00
UG Cbl Metallic	5C	$51.24	$49.10	$46.58	$54.41	$0.00	$0.00
Buried Cbl Metallic	45C	$647.56	$490.33	$628.02	$751.16	$0.00	$0.00
Intrabuilding Cbl., Exch., Metallic	62C	$13.61	$18.81	$14.02	$10.27	$0.00	$0.00
UG Cbl Nonmetallic	85C	$6.98	$3.86	$10.09	$7.64	$0.00	$0.00
Pair Gain—Digital	257C	$207.23	$101.79	$187.13	$279.51	$0.00	$0.00
Buried Cbl Nonmetallic	845C	$260.30	$26.87	$149.40	$446.89	$0.00	$0.00
Buried Drop	35C	$84.31	$63.84	$80.83	$98.17	$0.00	$0.00
Aerial Drop	42C	$14.94	$11.08	$14.23	$17.57	$0.00	$0.00
Digital Switch	377c	$29.72	$29.72	$29.72	$29.72	$0.00	$0.00
Land	20C	$0.33	$0.18	$0.30	$0.43	$0.00	$0.00
Building	110C	$12.70	$7.05	$11.63	$16.58	$0.00	$0.00
General Purpose Comp. (Billing)	361C	$0.0001	$0.0001	$0.0001	$0.0001	$0.0000	$0.0000
Total Loop Investment		**$1,456.25**	**$901.53**	**$1,292.79**	**$1,859.62**	**$0.00**	**$0.00**
Investment Cost Calculation							
Depreciation		$8.52	$5.21	$7.58	$10.92	$0.00	$0.00
Cost of Money		$6.72	$4.18	$5.96	$8.57	$0.00	$0.00
Income Tax		$2.54	$1.58	$2.25	$3.24	$0.00	$0.00
Ad Valorem		$1.05	$0.65	$0.93	$1.33	$0.00	$0.00
Maintenance		$4.21	$2.98	$3.94	$5.07	$0.00	$0.00
Total Capital Costs		$23.04	$14.60	$20.67	$29.12	$0.00	$0.00
Development of Total Product Costs							
Element Specific Expenses		$0.0165	$0.0165	$0.0165	$0.0165	$0.0000	$0.0000
Direct Costs		$23.90	$15.47	$21.53	$29.99	$0.00	$0.00
TELRIC		$29.57	$21.13	$27.20	$35.65	$0.00	$0.00
Common		$1.34	$1.34	$1.34	$1.34	$0.00	$0.00
Total Loop TELRIC + Common		**$30.90**	**$22.47**	**$28.53**	**$36.99**	**$0.00**	**$0.00**
Feeder Cost Calculations							
Investments by Account	FRC						
Poles	1C	$0.29	$0.10	$0.08	$0.49	$0.00	$0.00
Aerial Cbl Metallic	52C	$0.56	$0.19	$0.16	$0.95	$0.00	$0.00
Conduit System	4C	$71.22	$61.73	$69.48	$77.69	$0.00	$0.00
UG Cbl Metallic	5C	$46.56	$42.75	$41.86	$50.77	$0.00	$0.00
Buried Cbl Metallic	45C	$9.55	$2.08	$2.06	$17.10	$0.00	$0.00
UG Cbl Nonmetallic	85C	$6.98	$3.86	$10.09	$7.64	$0.00	$0.00
Pair Gain—Digital	257C	$207.23	$101.79	$187.13	$279.51	$0.00	$0.00
Buried Cbl Nonmetallic	845C	$260.30	$26.87	$149.40	$446.89	$0.00	$0.00
Digital Switch	377C	$29.72	$29.72	$29.72	$29.72	$0.00	$0.00
Land	20C	$0.33	$0.18	$0.30	$0.43	$0.00	$0.00
Building	110C	$12.70	$7.05	$11.63	$16.58	$0.00	$0.00
General Purpose Comp. (Billing)	361C	$0.0001	$0.0001	$0.0001	$0.0001	$0.0000	$0.0000
Total Feeder Investment		**$645.44**	**$276.32**	**$501.90**	**$927.76**	**$0.00**	**$0.00**
Investment Cost Calculation							
Depreciation		$4.09	$1.82	$3.28	$5.80	$0.00	$0.00
Cost of Money		$2.90	$1.23	$2.24	$4.18	$0.00	$0.00
Income Tax		$1.10	$0.47	$0.85	$1.58	$0.00	$0.00
Ad Valorem		$0.46	$0.20	$0.36	$0.67	$0.00	$0.00
Maintenance		$0.70	$0.32	$0.53	$1.00	$0.00	$0.00
Total Feeder Capital Costs		$9.25	$4.04	$7.25	$13.23	$0.00	$0.00
Development of Total Product Costs							
Element Specific Expenses		$0.0165	$0.0165	$0.0165	$0.0165	$0.0000	$0.0000
Direct Costs		$9.61	$4.40	$7.61	$13.59	$0.00	$0.00
TELRIC		$11.89	$6.67	$9.88	$15.86	$0.00	$0.00
Common		$0.54	$0.54	$0.54	$0.54	$0.00	$0.00
Feeder TELRIC + Common		**$12.42**	**$7.21**	**$10.42**	**$16.40**	**$0.00**	**$0.00**
Distribution Cost Calculations							
Investments by Account	FRC						
Poles	1C	$18.79	$12.53	$17.38	$23.16	$0.00	$0.00
Aerial Cbl Metallic	52C	$35.32	$24.13	$33.09	$43.03	$0.00	$0.00
Aerial Wire	3C	$1.16	$0.20	$0.66	$1.95	$0.00	$0.00
UG Cbl Metallic	5C	$4.68	$6.35	$4.72	$3.64	$0.00	$0.00
Buried Cbl Metallic	45C	$638.01	$488.26	$625.95	$734.07	$0.00	$0.00
Intrabuilding Cbl., Exch., Metallic	62C	$13.61	$18.81	$14.02	$10.27	$0.00	$0.00
Buried Drop	35C	$84.31	$63.84	$80.83	$98.17	$0.00	$0.00
Aerial Drop	42C	$14.94	$11.08	$14.23	$17.57	$0.00	$0.00
General Purpose Comp. (Billing)	361C	$0.0001	$0.0001	$0.0001	$0.0001	$0.0000	$0.0000
Total Distribution Investment		**$810.81**	**$625.21**	**$790.89**	**$931.86**	**$0.00**	**$0.00**
Investment Cost Calculation							
Depreciation		$4.43	$3.39	$4.30	$5.12	$0.00	$0.00
Cost of Money		$3.82	$2.95	$3.72	$4.38	$0.00	$0.00
Income Tax		$1.44	$1.11	$1.41	$1.66	$0.00	$0.00
Ad Valorem		$0.58	$0.45	$0.57	$0.67	$0.00	$0.00
Maintenance		$3.51	$2.66	$3.41	$4.07	$0.00	$0.00
Total Distribution Capital Costs		$13.78	$10.56	$13.42	$15.89	$0.00	$0.00
Development of Total Product Costs							
Element Specific Expenses		$0.0165	$0.0165	$0.0165	$0.0165	$0.0000	$0.0000
Direct Costs		$14.31	$11.09	$13.94	$16.42	$0.00	$0.00
TELRIC		$17.70	$14.48	$17.33	$19.81	$0.00	$0.00
Common		$0.80	$0.80	$0.80	$0.80	$0.00	$0.00
Distribution TELRIC + Common		**$18.50**	**$15.28**	**$18.13**	**$20.61**	**$0.00**	**$0.00**

South Dakota
Qwest Defaults 7/20/01 10:04:18 AM

4-Wire Unbundled Loop Cost Summary by Zones

Office Name		Statewide Average	Wire Center Zone	Wire Center Zone	Wire Center Zone	Wire Center Zone	Wire Center Zone
Zone			1	2	3	4	5
Total Loop Cost Calculations							
Investments by Account (From Wire Center Loop Costs or Loop Length Zone Data)	FRC						
Poles	1C	$38.15	$25.26	$34.92	$47.30	$0.00	$0.00
Aerial Cbl Metallic	52C	$71.76	$48.64	$66.49	$87.96	$0.00	$0.00
Aerial Wire	3C	$2.32	$0.41	$1.32	$3.90	$0.00	$0.00
Conduit System	4C	$142.43	$123.46	$138.96	$155.38	$0.00	$0.00
UG Cbl Metallic	5C	$102.48	$98.20	$93.15	$108.82	$0.00	$0.00
Buried Cbl Metallic	45C	$1,295.11	$980.67	$1,256.03	$1,502.32	$0.00	$0.00
Intrabuilding Cbl., Exch., Metallic	62C	$27.22	$37.62	$28.05	$20.55	$0.00	$0.00
UG Cbl Nonmetallic	85C	$13.97	$7.73	$20.17	$15.28	$0.00	$0.00
Pair Gain—Digital	257C	$414.45	$203.57	$374.25	$559.02	$0.00	$0.00
Buried Cbl Nonmetallic	845C	$520.59	$53.74	$298.81	$893.77	$0.00	$0.00
Buried Drop	35C	$168.62	$127.68	$161.67	$196.34	$0.00	$0.00
Aerial Drop	42C	$29.88	$22.17	$28.47	$35.14	$0.00	$0.00
Digital Switch	377c	$59.44	$59.44	$59.44	$59.44	$0.00	$0.00
Land	20C	$0.66	$0.37	$0.61	$0.87	$0.00	$0.00
Building	110C	$25.41	$14.10	$23.25	$33.16	$0.00	$0.00
General Purpose Comp. (Billing)	361C	$0.0001	$0.0001	$0.0001	$0.0001	$0.0000	$0.0000
Total Loop Investment		**$2,912.50**	**$1,803.05**	**$2,585.58**	**$3,719.25**	**$0.00**	**$0.00**
Investment Cost Calculation							
Depreciation		$17.04	$10.42	$15.16	$21.83	$0.00	$0.00
Cost of Money		$13.43	$8.36	$11.92	$17.13	$0.00	$0.00
Income Tax		$5.08	$3.16	$4.51	$6.48	$0.00	$0.00
Ad Valorem		$2.09	$1.29	$1.86	$2.67	$0.00	$0.00
Maintenance		$8.42	$5.97	$7.89	$10.13	$0.00	$0.00
Total Capital Costs		$46.07	$29.20	$41.33	$58.25	$0.00	$0.00
Development of Total Product Costs							
Element Specific Expenses		$0.0165	$0.0165	$0.0165	$0.0165	$0.0000	$0.0000
Direct Costs		$47.79	$30.92	$43.05	$59.96	$0.00	$0.00
TELRIC		$59.11	$42.24	$54.37	$71.29	$0.00	$0.00
Common		$2.67	$2.67	$2.67	$2.67	$0.00	$0.00
Total Loop TELRIC + Common		**$61.78**	**$44.91**	**$57.04**	**$73.96**	**$0.00**	**$0.00**
Feeder Cost Calculations							
Investments by Account	FRC						
Poles	1C	$0.58	$0.19	$0.16	$0.98	$0.00	$0.00
Aerial Cbl Metallic	52C	$1.12	$0.38	$0.32	$1.90	$0.00	$0.00
Conduit System	4C	$142.43	$123.46	$138.96	$155.38	$0.00	$0.00
UG Cbl Metallic	5C	$93.12	$85.49	$83.71	$101.54	$0.00	$0.00
Buried Cbl Metallic	45C	$19.10	$4.16	$4.12	$34.19	$0.00	$0.00
UG Cbl Nonmetallic	85C	$13.97	$7.73	$20.17	$15.28	$0.00	$0.00
Pair Gain—Digital	257C	$414.45	$203.57	$374.25	$559.02	$0.00	$0.00
Buried Cbl Nonmetallic	845C	$520.59	$53.74	$298.81	$893.77	$0.00	$0.00
Digital Switch	377C	$59.44	$59.44	$59.44	$59.44	$0.00	$0.00
Land	20C	$0.66	$0.37	$0.61	$0.87	$0.00	$0.00
Building	110C	$25.41	$14.10	$23.25	$33.16	$0.00	$0.00
General Purpose Comp. (Billing)	361C	$0.0001	$0.0001	$0.0001	$0.0001	$0.0000	$0.0000
Total Feeder Investment		**$1,290.87**	**$552.63**	**$1,003.81**	**$1,855.52**	**$0.00**	**$0.00**
Investment Cost Calculation							
Depreciation		$8.18	$3.64	$6.56	$11.60	$0.00	$0.00
Cost of Money		$5.80	$2.47	$4.47	$8.36	$0.00	$0.00
Income Tax		$2.19	$0.93	$1.69	$3.16	$0.00	$0.00
Ad Valorem		$0.93	$0.40	$0.72	$1.33	$0.00	$0.00
Maintenance		$1.40	$0.64	$1.06	$2.00	$0.00	$0.00
Total Feeder Capital Costs		$18.50	$8.08	$14.50	$26.46	$0.00	$0.00
Development of Total Product Costs							
Element Specific Expenses		$0.0165	$0.0165	$0.0165	$0.0165	$0.0000	$0.0000
Direct Costs		$19.20	$8.78	$15.20	$27.16	$0.00	$0.00
TELRIC		$23.75	$13.33	$19.75	$31.71	$0.00	$0.00
Common		$1.07	$1.07	$1.07	$1.07	$0.00	$0.00
Feeder TELRIC + Common		**$24.82**	**$14.40**	**$20.82**	**$32.78**	**$0.00**	**$0.00**
Distribution Cost Calculations							
Investments by Account	FRC						
Poles	1C	$37.57	$25.06	$34.75	$46.32	$0.00	$0.00
Aerial Cbl Metallic	52C	$70.64	$48.26	$66.17	$86.06	$0.00	$0.00
Aerial Wire	3C	$2.32	$0.41	$1.32	$3.90	$0.00	$0.00
UG Cbl Metallic	5C	$9.36	$12.71	$9.44	$7.28	$0.00	$0.00
Buried Cbl Metallic	45C	$1,276.01	$976.51	$1,251.91	$1,466.13	$0.00	$0.00
Intrabuilding Cbl., Exch., Metallic	62C	$27.22	$37.62	$28.05	$20.55	$0.00	$0.00
Buried Drop	35C	$168.62	$127.68	$161.67	$196.34	$0.00	$0.00
Aerial Drop	42C	$29.88	$22.17	$28.47	$35.14	$0.00	$0.00
General Purpose Comp. (Billing)	361C	$0.0001	$0.0001	$0.0001	$0.0001	$0.0000	$0.0000
Total Distribution Investment		**$1,621.63**	**$1,250.42**	**$1,581.78**	**$1,863.73**	**$0.00**	**$0.00**
Investment Cost Calculation							
Depreciation		$8.86	$6.78	$8.61	$10.23	$0.00	$0.00
Cost of Money		$7.63	$5.89	$7.45	$8.77	$0.00	$0.00
Income Tax		$2.89	$2.23	$2.82	$3.32	$0.00	$0.00
Ad Valorem		$1.16	$0.90	$1.14	$1.34	$0.00	$0.00
Maintenance		$7.02	$5.33	$6.83	$8.13	$0.00	$0.00
Total Distribution Capital Costs		$27.57	$21.13	$26.83	$31.79	$0.00	$0.00
Development of Total Product Costs							
Element Specific Expenses		$0.0165	$0.0165	$0.0165	$0.0165	$0.0000	$0.0000
Direct Costs		$28.60	$22.16	$27.87	$32.82	$0.00	$0.00
TELRIC		$35.38	$28.94	$34.65	$39.60	$0.00	$0.00
Common		$1.60	$1.60	$1.60	$1.60	$0.00	$0.00
Distribution TELRIC + Common		**$36.98**	**$30.54**	**$36.24**	**$41.20**	**$0.00**	**$0.00**

Section A - Unbundled Loop
Wire Center Loop Costs 2W

	A	B	C	D	E	F	G	H	I	J
1	South Dakota									
2	Qwest Defaults 7/20/01 10:04:18 AM									
3	2W Wire Center Cost Calculations									
4		Office Name		Aberdeen	Arlington	Belle Fourche	Blackhawk	Cavour	Chamberlain	Colman
5		CLLI		ABRDSDCO	ARTNSDCO	BLFRSDCO	BLHKSDCE	CAVRSDCO	CHBLSDCO	CLMNSDCO
6		Zone		3	3	3	2	3	3	3
7		Lines		21206	1231	3934	3735	296	2349	683
8	**Total Loop Cost Calculations**									
9	Investments by Account (From Loop Module Output or Loop Length Zone Data)		FRC							
10		Poles	1C	$18.23	$64.14	$30.27	$33.23	$7.06	$33.36	$5.62
11		*Aerial Cbl Metallic*	*52C*	*$34.46*	*$110.68*	*$54.52*	$62.09	$13.72	$63.93	$10.90
12		Aerial Wire	3C	$0.94	$13.90	$4.25	$2.44	$0.00	$0.85	$0.00
13		Conduit System	4C	$85.23	$21.11	$104.53	$35.54	$37.14	$18.54	$28.58
14		UG Cbl Metallic	5C	$63.10	$14.35	$74.08	$17.07	$8.04	$13.00	$24.41
15		Buried Cbl Metallic	45C	$630.32	$1,381.35	$817.46	$1,049.24	$279.07	$1,127.19	$204.35
16		Intrabuilding Cbl., Exch., Metallic	62C	$19.10	$10.78	$18.71	$7.51	$2.22	$4.60	$37.18
17		UG Cbl Nonmetallic	85C	$7.31	$4.59	$10.31	$11.41	$18.59	$2.53	$7.63
18		Pair Gain—Digital	257C	$158.67	$755.68	$354.54	$397.65	$3,569.00	$349.64	$914.52
19		Buried Cbl Nonmetallic	845C	$344.78	$1,096.33	$522.49	$426.86	$3,846.21	$392.63	$1,464.11
20		Buried Drop	35C	$78.44	$151.59	$103.47	$125.88	$78.91	$124.57	$32.24
21		Aerial Drop	42C	$14.01	$28.04	$18.81	$22.95	$13.21	$22.64	$5.40
22		Digital Switch	377C	$29.72	$29.72	$29.72	$29.72	$29.72	$29.72	$29.72
23		Land	20C	$0.26	$1.10	$0.54	$0.60	$5.04	$0.53	$1.32
24		*Building*	110C	$10.10	$42.10	$20.60	$22.91	$192.89	$20.34	$50.61
25		General Purpose Comp. (Billing)	361C	$0.0001	$0.0001	$0.0001	$0.0001	$0.0001	$0.0001	$0.0001
27		**Total Loop Investment**		**$1,494.69**	**$3,725.44**	**$2,164.29**	**$2,245.11**	**$8,100.81**	**$2,204.07**	**$2,816.58**
28	Investment Cost Calculation									
29		Depreciation		$8.50	$23.03	$12.84	$13.53	$55.21	$13.15	$18.05
30		Cost of Money		$6.95	$16.94	$9.96	$10.25	$35.35	$10.08	$12.57
31		Income Tax		$2.63	$6.40	$3.77	$3.88	$13.37	$3.81	$4.75
32		Ad Valorem		$1.07	$2.67	$1.55	$1.61	$5.61	$1.58	$2.02
33		Maintenance		$4.16	$9.77	$5.72	$6.66	$9.33	$6.87	$3.70
34		Total Capital Costs		$23.31	$58.81	$33.84	$35.92	$119.07	$35.49	$41.08
35	Development of Total Product Costs									
36		Element Specific Expenses		$0.0165	$0.0165	$0.0165	$0.0165	$0.0165	$0.0165	$0.0165
37		Direct Costs		$24.18	$59.68	$34.70	$36.79	$119.94	$36.36	$41.95
38		TELRIC		$29.84	$65.34	$40.37	$42.45	$125.60	$42.02	$47.61
39		Common		$1.34	$1.34	$1.34	$1.34	$1.34	$1.34	$1.34
40	**Total Loop TELRIC + Common**			**$31.17**	**$66.68**	**$41.70**	**$43.79**	**$126.94**	**$43.36**	**$48.95**
41	**Feeder Cost Calculations**									
42	Investments by Account		FRC							
43		Poles	1C	$0.00	$1.12	$0.86	$0.50	$4.73	$3.01	$4.01
44		Aerial Cbl Metallic	52C	$0.00	$2.17	$1.67	$0.98	$9.19	$5.84	$7.78
45		Conduit System	4C	$85.23	$21.11	$104.53	$35.54	$37.14	$18.54	$28.58
46		UG Cbl Metallic	5C	$56.87	$11.06	$68.27	$14.60	$7.99	$11.35	$13.43
47		Buried Cbl Metallic	45C	$0.00	$75.48	$19.67	$17.89	$182.62	$69.06	$104.26
48		UG Cbl Nonmetallic	85C	$7.31	$4.59	$10.31	$11.41	$18.59	$2.53	$7.63
49		Pair Gain—Digital	257C	$158.67	$755.68	$354.54	$397.65	$3,569.00	$349.64	$914.52
50		Buried Cbl Nonmetallic	845C	$344.78	$1,096.33	$522.49	$426.86	$3,846.21	$392.63	$1,464.11
51		Digital Switch	377C	$29.72	$29.72	$29.72	$29.72	$29.72	$29.72	$29.72
52		Land	20C	$0.26	$1.10	$0.54	$0.60	$5.04	$0.53	$1.32
53		Building	110C	$10.10	$42.10	$20.60	$22.91	$192.89	$20.34	$50.61
54		General Purpose Comp. (Billing)	361C	$0.0001	$0.0001	$0.0001	$0.0001	$0.0001	$0.0001	$0.0001
56		**Total Feeder Investment**		**$692.95**	**$2,040.47**	**$1,133.19**	**$968.67**	**$7,903.11**	**$903.18**	**$2,625.97**
57	Investment Cost Calculation									
58		Depreciation		$4.12	$13.40	$7.10	$6.47	$54.13	$6.07	$17.01
59		Cost of Money		$3.18	$9.02	$5.11	$4.20	$34.41	$3.96	$11.66
60		Income Tax		$1.20	$3.41	$1.93	$1.59	$13.01	$1.50	$4.41
61		Ad Valorem		$0.50	$1.46	$0.81	$0.69	$5.67	$0.65	$1.88
62		Maintenance		$0.71	$2.27	$1.22	$1.02	$8.43	$1.18	$2.98
63		Total Feeder Capital Costs		$9.70	$29.56	$16.17	$13.97	$115.66	$13.36	$37.94
64	Development of Total Product Costs									
65		Element Specific Expenses		$0.0165	$0.0165	$0.0165	$0.0165	$0.0165	$0.0165	$0.0165
66		Direct Costs		$10.06	$29.92	$16.53	$14.33	$116.02	$13.72	$38.30
67		TELRIC		$12.34	$32.19	$18.81	$16.60	$118.29	$16.00	$40.58
68		Common		$0.54	$0.54	$0.54	$0.54	$0.54	$0.54	$0.54
69	**Feeder TELRIC + Common**			**$12.88**	**$32.73**	**$19.34**	**$17.14**	**$118.83**	**$16.54**	**$41.11**
70	**Distribution Cost Calculations**									
71	Investments by Account		FRC							
72		Poles	1C	$18.23	$63.02	$29.41	$32.72	$2.33	$30.35	$1.61
73		Aerial Cbl Metallic	52C	$34.46	$108.49	$52.86	$61.11	$4.53	$58.09	$3.12
74		Aerial Wire	3C	$0.94	$13.90	$4.25	$2.44	$0.00	$0.85	$0.00
75		UG Cbl Metallic	5C	$6.23	$3.29	$5.80	$2.47	$0.05	$1.66	$10.98
76		Buried Cbl Metallic	45C	$630.32	$1,305.87	$797.79	$1,031.38	$96.46	$1,058.13	$100.09
77		Intrabuilding Cbl., Exch., Metallic	62C	$19.10	$10.78	$18.71	$7.51	$2.22	$4.60	$37.18
78		Buried Drop	35C	$78.44	$151.59	$103.47	$125.88	$78.91	$124.57	$32.24
79		Aerial Drop	42C	$14.01	$28.04	$18.81	$22.95	$13.21	$22.64	$5.40
80		General Purpose Comp. (Billing)	361C	$0.0001	$0.0001	$0.0001	$0.0001	$0.0001	$0.0001	$0.0001
81		**Total Distribution Investment**		**$801.74**	**$1,684.97**	**$1,031.09**	**$1,286.45**	**$197.70**	**$1,300.89**	**$190.61**
82	Investment Cost Calculation									
83		Depreciation		$4.38	$9.64	$5.74	$7.06	$1.08	$7.08	$1.04
84		Cost of Money		$3.78	$7.92	$4.85	$6.05	$0.93	$6.12	$0.91
85		Income Tax		$1.43	$2.99	$1.83	$2.29	$0.35	$2.31	$0.34
86		Ad Valorem		$0.58	$1.21	$0.74	$0.92	$0.14	$0.93	$0.14
87		Maintenance		$3.45	$7.50	$4.50	$5.63	$0.90	$5.68	$0.72
88		Total Distribution Capital Costs		$13.60	$29.26	$17.67	$21.95	$3.41	$22.13	$3.14
89	Development of Total Product Costs									
90		Element Specific Expenses		$0.0165	$0.0165	$0.0165	$0.0165	$0.0165	$0.0165	$0.0165
91		Direct Costs		$14.13	$29.78	$18.19	$22.48	$3.94	$22.65	$3.87
92		TELRIC		$17.52	$33.17	$21.58	$25.87	$7.33	$26.04	$7.06
93		Common		$0.80	$0.80	$0.80	$0.80	$0.80	$0.80	$0.80
94	**Distribution TELRIC + Common**			**$18.32**	**$33.97**	**$22.38**	**$26.67**	**$8.13**	**$26.84**	**$7.86**

Section A - Unbundled Loop
Wire Center Loop Costs 2W

	A	B	C	K	L	M	N	O	P	Q	R
1	South Dakota										
2	Qwest Defaults 7/20/01 10:04:18 AM										
3	**2W Wire Center Cost Calculations**										
4		**Office Name**		**Canton**	**Deadwood**	**Desmet**	**Elk Point**	**Flandreau**	**Ft Pierre**	**Hill City**	**Harrisburg**
5		CLLI		CNTNSDCO	DDWDSDCO	DESMSDCO	ELPNSDCO	FLNDSDCO	FTPRSDCE	HLCYSDCO	HRBGSDCO
6		Zone		3	3	3	3	3	3	3	1
7		Lines		2477	2680	1189	1466	2214	1498	1755	1009
8	**Total Loop Cost Calculations**										
9	Investments by Account (From Loop Module Output or Loop Length Zone Data)		FRC								
10		Poles	1C	$23.39	$27.11	$40.58	$30.27	$64.02	$38.35	$50.32	$24.92
11		Aerial Cbl Metallic	52C	$43.71	$49.77	$75.00	$56.36	$110.46	$71.35	$89.92	$47.62
12		Aerial Wire	3C	$1.72	$2.88	$3.80	$2.41	$13.86	$3.12	$7.79	$0.77
13		Conduit System	4C	$21.07	$77.57	$22.34	$21.01	$18.22	$22.14	$11.79	$9.12
14		UG Cbl Metallic	5C	$17.70	$43.29	$12.61	$12.76	$15.52	$13.27	$5.59	$8.05
15		Buried Cbl Metallic	45C	$762.29	$802.31	$1,263.62	$1,040.96	$1,326.19	$1,204.69	$1,271.90	$859.39
16		Intrabuilding Cbl., Exch., Metallic	62C	$14.93	$4.65	$0.69	$1.63	$14.47	$0.54	$0.64	$17.76
17		UG Cbl Nonmetallic	85C	$2.71	$15.90	$4.38	$3.75	$2.62	$3.57	$3.47	$3.81
18		Pair Gain---Digital	257C	$259.93	$452.32	$761.82	$593.32	$493.20	$328.44	$1,015.50	$604.27
19		Buried Cbl Nonmetallic	845C	$369.36	$683.47	$844.22	$753.31	$660.63	$589.10	$1,380.90	$567.64
20		Buried Drop	35C	$103.30	$124.08	$147.37	$111.64	$99.18	$153.14	$162.53	$101.81
21		Aerial Drop	42C	$18.71	$22.36	$26.96	$19.77	$17.68	$28.12	$29.80	$18.65
22		Digital Switch	377C	$29.72	$29.72	$29.72	$29.72	$29.72	$29.72	$29.72	$29.72
23		Land	20C	$0.41	$0.67	$1.11	$0.87	$0.73	$0.50	$1.46	$0.89
24		Building	110C	$15.53	$25.84	$42.43	$33.40	$28.03	$19.20	$56.03	$33.98
25		General Purpose Comp. (Billing)	361C	$0.0001	$0.0001	$0.0001	$0.0001	$0.0001	$0.0001	$0.0001	$0.0001
27		**Total Loop Investment**		**$1,684.48**	**$2,361.96**	**$3,276.64**	**$2,711.20**	**$2,894.52**	**$2,505.26**	**$4,117.36**	**$2,328.41**
28	Investment Cost Calculation										
29		Depreciation		$10.04	$14.19	$20.33	$16.84	$17.76	$14.69	$25.79	$14.67
30		Cost of Money		$7.72	$10.80	$14.81	$12.29	$13.22	$11.53	$18.57	$10.46
31		Income Tax		$2.92	$4.08	$5.60	$4.65	$5.00	$4.36	$7.02	$3.96
32		Ad Valorem		$1.21	$1.70	$2.35	$1.95	$2.08	$1.80	$2.96	$1.67
33		Maintenance		$4.95	$5.88	$8.56	$6.95	$8.54	$7.60	$9.63	$5.92
34		Total Capital Costs		$26.84	$36.65	$51.66	$42.47	$46.59	$39.99	$63.98	$36.68
35	Development of Total Product Costs										
36		Element Specific Expenses		$0.0165	$0.0165	$0.0165	$0.0165	$0.0165	$0.0165	$0.0165	$0.0165
37		Direct Costs		$27.70	$37.51	$52.52	$43.34	$47.46	$40.85	$64.84	$37.55
38		TELRIC		$33.37	$43.18	$58.19	$48.00	$53.12	$46.52	$70.51	$43.21
39		Common		$1.34	$1.34	$1.34	$1.34	$1.34	$1.34	$1.34	$1.34
40	**Total Loop TELRIC + Common**			**$34.70**	**$44.51**	**$59.52**	**$50.34**	**$54.46**	**$47.85**	**$71.84**	**$44.55**
41	**Feeder Cost Calculations**										
42	Investments by Account		FRC								
43		Poles	1C	$1.23	$1.20	$0.52	$1.99	$5.31	$1.96	$0.74	$1.02
44		Aerial Cbl Metallic	52C	$2.39	$2.33	$1.02	$3.86	$10.30	$3.80	$1.44	$1.98
45		Conduit System	4C	$21.07	$77.57	$22.34	$21.01	$18.22	$22.14	$11.79	$9.12
46		UG Cbl Metallic	5C	$13.07	$41.67	$12.22	$11.89	$11.01	$12.95	$5.18	$2.78
47		Buried Cbl Metallic	45C	$51.44	$34.31	$73.40	$143.89	$144.93	$101.13	$13.72	$41.92
48		UG Cbl Nonmetallic	85C	$2.71	$15.90	$4.38	$3.75	$2.62	$3.57	$3.47	$3.81
49		Pair Gain---Digital	257C	$259.93	$452.32	$761.82	$593.32	$493.20	$328.44	$1,015.50	$604.27
50		Buried Cbl Nonmetallic	845C	$369.36	$683.47	$844.22	$753.31	$660.63	$589.10	$1,380.90	$567.64
51		Digital Switch	377C	$29.72	$29.72	$29.72	$29.72	$29.72	$29.72	$29.72	$29.72
52		Land	20C	$0.41	$0.67	$1.11	$0.87	$0.73	$0.50	$1.46	$0.89
53		Building	110C	$15.53	$25.84	$42.43	$33.40	$28.03	$19.20	$56.03	$33.98
54		General Purpose Comp. (Billing)	361C	$0.0001	$0.0001	$0.0001	$0.0001	$0.0001	$0.0001	$0.0001	$0.0001
56		**Total Feeder Investment**		**$766.85**	**$1,366.02**	**$1,793.18**	**$1,597.02**	**$1,404.68**	**$1,112.52**	**$2,519.93**	**$1,297.14**
57	Investment Cost Calculation										
58		Depreciation		$5.00	$8.68	$12.16	$10.52	$9.20	$7.03	$16.85	$9.05
59		Cost of Money		$3.40	$6.11	$7.84	$7.05	$6.22	$4.98	$11.06	$5.61
60		Income Tax		$1.29	$2.31	$2.96	$2.67	$2.35	$1.88	$4.18	$2.12
61		Ad Valorem		$0.55	$0.98	$1.29	$1.15	$1.01	$0.80	$1.81	$0.93
62		Maintenance		$0.96	$1.48	$2.02	$2.06	$1.95	$1.45	$2.55	$1.45
63		Total Feeder Capital Costs		$11.19	$19.56	$26.27	$23.45	$20.73	$16.15	$36.46	$19.16
64	Development of Total Product Costs										
65		Element Specific Expenses		$0.0165	$0.0165	$0.0165	$0.0165	$0.0165	$0.0165	$0.0165	$0.0165
66		Direct Costs		$11.55	$19.92	$26.62	$23.81	$21.08	$16.51	$36.82	$19.52
67		TELRIC		$13.83	$22.20	$28.90	$26.09	$23.36	$18.78	$39.09	$21.80
68		Common		$0.54	$0.54	$0.54	$0.54	$0.54	$0.54	$0.54	$0.54
69	**Feeder TELRIC + Common**			**$14.37**	**$22.74**	**$29.44**	**$26.62**	**$23.90**	**$19.32**	**$39.63**	**$22.33**
70	**Distribution Cost Calculations**										
71	Investments by Account		FRC								
72		Poles	1C	$22.16	$25.91	$40.05	$28.28	$58.71	$36.39	$49.58	$23.90
73		Aerial Cbl Metallic	52C	$41.32	$47.44	$73.98	$52.52	$100.16	$67.55	$88.49	$45.64
74		Aerial Wire	3C	$1.72	$2.88	$3.80	$2.41	$13.86	$3.12	$7.79	$0.77
75		UG Cbl Metallic	5C	$4.63	$1.62	$0.39	$0.86	$4.51	$0.32	$0.41	$5.27
76		Buried Cbl Metallic	45C	$710.88	$768.00	$1,190.21	$897.07	$1,181.26	$1,103.56	$1,258.19	$817.47
77		Intrabuilding Cbl., Exch., Metallic	62C	$14.93	$4.65	$0.69	$1.63	$14.47	$0.54	$0.64	$17.76
78		Buried Drop	35C	$103.30	$124.08	$147.37	$111.64	$99.18	$153.14	$162.53	$101.81
79		Aerial Drop	42C	$18.71	$22.36	$26.96	$19.77	$17.68	$28.12	$29.80	$18.65
80		General Purpose Comp. (Billing)	361C	$0.0001	$0.0001	$0.0001	$0.0001	$0.0001	$0.0001	$0.0001	$0.0001
81		**Total Distribution Investment**		**$917.64**	**$996.94**	**$1,483.46**	**$1,114.18**	**$1,489.83**	**$1,392.74**	**$1,597.42**	**$1,031.27**
82	Investment Cost Calculation										
83		Depreciation		$5.04	$5.51	$8.18	$6.11	$8.56	$7.66	$8.94	$5.62
84		Cost of Money		$4.32	$4.69	$6.97	$5.24	$7.00	$6.55	$7.51	$4.85
85		Income Tax		$1.63	$1.77	$2.64	$1.98	$2.65	$2.48	$2.84	$1.84
86		Ad Valorem		$0.66	$0.72	$1.06	$0.80	$1.07	$1.00	$1.15	$0.74
87		Maintenance		$4.00	$4.40	$6.54	$4.89	$6.59	$6.15	$7.09	$4.47
88		Total Distribution Capital Costs		$15.64	$17.08	$25.39	$19.02	$25.86	$23.84	$27.52	$17.52
89	Development of Total Product Costs										
90		Element Specific Expenses		$0.0165	$0.0165	$0.0165	$0.0165	$0.0165	$0.0165	$0.0165	$0.0165
91		Direct Costs		$16.17	$17.61	$25.92	$19.55	$26.39	$24.36	$28.05	$18.05
92		TELRIC		$19.56	$21.00	$29.31	$22.94	$29.78	$27.75	$31.44	$21.44
93		Common		$0.80	$0.80	$0.80	$0.80	$0.80	$0.80	$0.80	$0.80
94	**Distribution TELRIC + Common**			**$20.36**	**$21.80**	**$30.11**	**$23.74**	**$30.58**	**$28.55**	**$32.24**	**$22.24**

Section A - Unbundled Loop
Wire Center Loop Costs 2W

	A	B	C	S	T	U	V	W	X	Y	Z
1	South Dakota										
2	Qwest Defaults 7/20/01 10:04:18 AM										
3	**2W Wire Center Cost Calculations**										
4		**Office Name**		**Huron**	**Iroquois**	**Lead**	**Lake Preston**	**Mcintosh**	**Madison**	**Milbank**	**Miller**
5		CLLI		HURNSDCO	IRQSSDCO	LEADSDCO	LKPRSDCO	MCINSDCO	MDSNSDCE	MLBNSDCO	MLLRSDCO
6		Zone		3	3	3	3	3	3	3	3
7		Lines		9839	381	3088	712	293	4891	3647	1740
8	**Total Loop Cost Calculations**										
9	Investments by Account (From Loop Module Output or Loop Length Zone Data)		FRC								
10		Poles	1C	$17.64	$31.08	$28.34	$50.62	$22.36	$12.84	$30.38	$23.91
11		Aerial Cbl Metallic	52C	$33.23	$60.38	$51.29	$94.12	$43.41	$24.75	$57.15	$46.43
12		Aerial Wire	3C	$1.03	$0.00	$3.75	$4.00	$0.00	$0.18	$1.84	$0.00
13		Conduit System	4C	$84.29	$37.27	$105.74	$29.48	$47.13	$97.37	$77.23	$17.84
14		UG Cbl Metallic	5C	$61.97	$12.55	$66.80	$14.45	$25.32	$65.47	$46.66	$10.99
15		Buried Cbl Metallic	45C	$600.41	$1,099.60	$801.57	$1,484.67	$854.49	$492.91	$984.07	$935.74
16		Intrabuilding Cbl., Exch., Metallic	62C	$13.48	$0.65	$9.23	$0.00	$13.94	$11.25	$1.58	$1.42
17		UG Cbl Nonmetallic	85C	$5.96	$14.83	$12.55	$7.32	$13.83	$11.73	$11.69	$3.16
18		Pair Gain—Digital	257C	$159.91	$2,083.76	$375.05	$1,305.36	$1,894.50	$224.15	$346.46	$969.59
19		Buried Cbl Nonmetallic	845C	$187.62	$2,125.24	$611.54	$1,544.49	$2,762.49	$327.54	$659.23	$970.71
20		Buried Drop	35C	$91.02	$137.59	$108.24	$168.71	$63.48	$73.44	$136.61	$113.29
21		Aerial Drop	42C	$16.26	$25.16	$19.36	$31.32	$10.63	$12.73	$24.89	$20.22
22		Digital Switch	377C	$29.72	$29.72	$29.72	$29.72	$29.72	$29.72	$29.72	$29.72
23		Land	20C	$0.27	$2.96	$0.57	$1.87	$2.69	$0.36	$0.53	$1.40
24		Building	110C	$10.17	$113.29	$21.70	$71.56	$103.14	$13.61	$20.17	$53.57
25		General Purpose Comp. (Billing)	361C	$0.0001	$0.0001	$0.0001	$0.0001	$0.0001	$0.0001	$0.0001	$0.0001
26											
27		**Total Loop Investment**		**$1,312.97**	**$5,774.10**	**$2,248.46**	**$4,837.59**	**$6,887.15**	**$1,398.06**	**$2,428.21**	**$3,197.99**
28	Investment Cost Calculation										
29		Depreciation		$7.58	$37.95	$13.30	$30.50	$37.63	$8.15	$14.15	$20.47
30		Cost of Money		$6.09	$25.54	$10.34	$21.74	$26.27	$6.45	$11.19	$14.28
31		Income Tax		$2.30	$9.66	$3.91	$8.22	$9.94	$2.44	$4.23	$5.40
32		Ad Valorem		$0.94	$4.14	$1.61	$3.47	$4.23	$1.00	$1.74	$2.30
33		Maintenance		$3.94	$10.31	$5.72	$11.06	$9.12	$3.51	$6.63	$7.02
34		Total Capital Costs		$20.85	$87.60	$34.89	$74.99	$87.18	$21.55	$37.95	$49.47
35	Development of Total Product Costs										
36		Element Specific Expenses		$0.0165	$0.0165	$0.0165	$0.0165	$0.0165	$0.0165	$0.0165	$0.0165
37		Direct Costs		$21.72	$88.47	$35.76	$75.86	$88.05	$22.42	$38.82	$50.33
38		TELRIC		$27.38	$94.13	$41.42	$81.52	$93.71	$28.08	$44.49	$56.00
39		Common		$1.34	$1.34	$1.34	$1.34	$1.34	$1.34	$1.34	$1.34
40	**Total Loop TELRIC + Common**			**$28.72**	**$95.47**	**$42.76**	**$82.86**	**$95.04**	**$29.42**	**$45.82**	**$57.33**
41	**Feeder Cost Calculations**										
42	Investments by Account		FRC								
43		Poles	1C	$0.00	$3.78	$0.00	$4.02	$9.79	$0.00	$0.00	$2.49
44		Aerial Cbl Metallic	52C	$0.00	$7.35	$0.00	$7.81	$19.01	$0.00	$0.00	$4.83
45		Conduit System	4C	$84.29	$37.27	$105.74	$29.48	$47.13	$97.37	$77.23	$17.84
46		UG Cbl Metallic	5C	$57.62	$12.19	$66.76	$14.45	$20.77	$61.29	$46.01	$10.12
47		Buried Cbl Metallic	45C	$0.00	$103.06	$0.00	$104.12	$335.12	$0.00	$0.00	$116.66
48		UG Cbl Nonmetallic	85C	$5.96	$14.83	$12.55	$7.32	$13.83	$11.73	$11.69	$3.16
49		Pair Gain—Digital	257C	$159.91	$2,083.76	$375.05	$1,305.36	$1,894.50	$224.15	$346.46	$969.59
50		Buried Cbl Nonmetallic	845C	$187.62	$2,125.24	$611.54	$1,544.49	$2,762.49	$327.54	$659.23	$970.71
51		Digital Switch	377C	$29.72	$29.72	$29.72	$29.72	$29.72	$29.72	$29.72	$29.72
52		Land	20C	$0.27	$2.96	$0.57	$1.87	$2.69	$0.36	$0.53	$1.40
53		Building	110C	$10.17	$113.29	$21.70	$71.56	$103.14	$13.61	$20.17	$53.57
54		General Purpose Comp. (Billing)	361C	$0.0001	$0.0001	$0.0001	$0.0001	$0.0001	$0.0001	$0.0001	$0.0001
55											
56		**Total Feeder Investment**		**$535.56**	**$4,533.44**	**$1,223.64**	**$3,120.21**	**$5,238.20**	**$765.76**	**$1,191.03**	**$2,180.08**
57	Investment Cost Calculation										
58		Depreciation		$3.33	$31.22	$7.62	$21.04	$34.12	$4.72	$7.38	$14.96
59		Cost of Money		$2.43	$19.70	$5.52	$13.67	$23.22	$3.47	$5.38	$9.49
60		Income Tax		$0.92	$7.45	$2.09	$5.17	$8.78	$1.31	$2.03	$3.59
61		Ad Valorem		$0.38	$3.25	$0.88	$2.24	$3.76	$0.55	$0.85	$1.56
62		Maintenance		$0.56	$4.87	$1.23	$3.48	$6.35	$0.78	$1.19	$2.57
63		Total Feeder Capital Costs		$7.62	$66.50	$17.33	$45.60	$76.23	$10.84	$16.83	$32.18
64	Development of Total Product Costs										
65		Element Specific Expenses		$0.0165	$0.0165	$0.0165	$0.0165	$0.0165	$0.0165	$0.0165	$0.0165
66		Direct Costs		$7.98	$66.86	$17.69	$45.95	$76.58	$11.19	$17.19	$32.54
67		TELRIC		$10.26	$69.14	$19.97	$48.23	$78.86	$13.47	$19.47	$34.82
68		Common		$0.54	$0.54	$0.54	$0.54	$0.54	$0.54	$0.54	$0.54
69	**Feeder TELRIC + Common**			**$10.79**	**$69.67**	**$20.51**	**$48.77**	**$79.40**	**$14.01**	**$20.00**	**$35.35**
70	**Distribution Cost Calculations**										
71	Investments by Account		FRC								
72		Poles	1C	$17.64	$27.31	$28.34	$46.50	$12.57	$12.84	$30.38	$21.42
73		Aerial Cbl Metallic	52C	$33.23	$53.04	$51.29	$86.30	$24.41	$24.75	$57.15	$41.60
74		Aerial Wire	3C	$1.03	$0.00	$3.75	$4.00	$0.00	$0.18	$1.84	$0.00
75		UG Cbl Metallic	5C	$4.35	$0.37	$3.04	$0.00	$4.55	$4.19	$0.65	$0.87
76		Buried Cbl Metallic	45C	$600.41	$996.54	$801.57	$1,380.55	$519.38	$492.91	$984.07	$819.08
77		Intrabuilding Cbl., Exch., Metallic	62C	$13.48	$0.65	$9.23	$0.00	$13.94	$11.25	$1.58	$1.42
78		Buried Drop	35C	$91.02	$137.59	$108.24	$168.71	$63.48	$73.44	$136.61	$113.29
79		Aerial Drop	42C	$16.26	$25.16	$19.36	$31.32	$10.63	$12.73	$24.89	$20.22
80		General Purpose Comp. (Billing)	361C	$0.0001	$0.0001	$0.0001	$0.0001	$0.0001	$0.0001	$0.0001	$0.0001
81		**Total Distribution Investment**		**$777.42**	**$1,240.66**	**$1,024.83**	**$1,717.38**	**$648.96**	**$632.29**	**$1,237.18**	**$1,017.91**
82	Investment Cost Calculation										
83		Depreciation		$4.25	$6.73	$5.68	$9.46	$3.50	$3.43	$6.77	$5.51
84		Cost of Money		$3.66	$5.84	$4.82	$8.07	$3.06	$2.98	$5.82	$4.79
85		Income Tax		$1.38	$2.21	$1.82	$3.05	$1.16	$1.13	$2.20	$1.81
86		Ad Valorem		$0.56	$0.89	$0.74	$1.23	$0.47	$0.45	$0.89	$0.73
87		Maintenance		$3.38	$5.44	$4.50	$7.58	$2.77	$2.73	$5.44	$4.45
88		Total Distribution Capital Costs		$13.23	$21.10	$17.56	$29.40	$10.95	$10.71	$21.12	$17.29
89	Development of Total Product Costs										
90		Element Specific Expenses		$0.0165	$0.0165	$0.0165	$0.0165	$0.0165	$0.0165	$0.0165	$0.0165
91		Direct Costs		$13.75	$21.63	$18.08	$29.92	$11.48	$11.24	$21.65	$17.81
92		TELRIC		$17.14	$25.02	$21.48	$33.31	$14.87	$14.63	$25.04	$21.20
93		Common		$0.80	$0.80	$0.80	$0.80	$0.80	$0.80	$0.80	$0.80
94	**Distribution TELRIC + Common**			**$17.94**	**$25.82**	**$22.27**	**$34.11**	**$15.67**	**$15.43**	**$25.84**	**$22.00**

Section A - Unbundled Loop
Wire Center Loop Costs 2W

	A	B	C	AA	AB	AC	AD	AE	AF	AG	AH	AI
1	South Dakota											
2	Qwest Defaults 7/20/01 10:04:18 AM											
3	**2W Wire Center Cost Calculations**											
4		**Office Name**		**Morristown**	**Mitchell**	**Pierre**	**Redfield**	**Rapid City**	**Rapid Valley**	**Spearfish**	**Sturgis**	**Sioux Falls Main**
5		CLLI		MRTWSDCO	MTCHSDCO	PIRRSDCO	RDFDSDCO	RPCYSDCO	RPVYSDCO	SPRFSDCO	STRGSDCO	SXFLSDCO
6		Zone		3	3	3	3	2	2	3	3	1
7		Lines		229	10858	13380	2827	47779	3295	7936	5485	70261
8	**Total Loop Cost Calculations**											
9	Investments by Account (From Loop Module Output or Loop Length Zone Data)		FRC									
10		Poles	1C	$17.51	$16.38	$18.68	$64.82	$15.29	$24.84	$25.98	$27.86	$10.28
11		Aerial Cbl Metallic	52C	$34.01	$31.58	$35.54	$115.08	$29.17	$47.63	$49.24	$52.85	$19.90
12		Aerial Wire	3C	$0.00	$0.22	$0.73	$10.80	$0.53	$0.80	$1.20	$1.34	$0.06
13		Conduit System	4C	$54.15	$83.65	$83.27	$131.14	$70.38	$131.19	$70.99	$79.75	$57.42
14		UG Cbl Metallic	5C	$25.28	$63.10	$61.64	$79.51	$48.34	$86.00	$46.09	$54.14	$47.05
15		Buried Cbl Metallic	45C	$707.78	$625.16	$659.54	$1,566.35	$563.32	$876.12	$885.01	$969.06	$419.22
16		Intrabuilding Cbl., Exch., Metallic	62C	$7.61	$11.36	$8.82	$0.00	$15.95	$1.11	$1.26	$1.38	$21.05
17		UG Cbl Nonmetallic	85C	$17.06	$10.83	$5.01	$18.58	$9.69	$13.25	$6.09	$6.69	$3.46
18		Pair Gain—Digital	257C	$3,066.06	$154.93	$136.06	$833.16	$149.98	$252.79	$180.95	$326.95	$91.20
19		Buried Cbl Nonmetallic	845C	$3,041.00	$410.12	$180.63	$1,168.57	$95.29	$365.03	$295.40	$416.69	$7.85
20		Buried Drop	35C	$71.97	$80.04	$88.42	$186.71	$72.17	$126.52	$122.25	$117.53	$54.37
21		Aerial Drop	42C	$12.05	$13.88	$15.72	$34.66	$12.58	$22.85	$21.96	$21.01	$9.30
22		Digital Switch	377c	$29.72	$29.72	$29.72	$29.72	$29.72	$29.72	$29.72	$29.72	$29.72
23		Land	20C	$4.33	$0.26	$0.23	$1.21	$0.25	$0.40	$0.29	$0.50	$0.17
24		Building	110C	$165.94	$9.90	$8.89	$46.25	$9.63	$15.15	$11.29	$19.12	$6.48
25		General Purpose Comp. (Billing)	361C	$0.0001	$0.0001	$0.0001	$0.0001	$0.0001	$0.0001	$0.0001	$0.0001	$0.0001
27		**Total Loop Investment**		**$7,254.46**	**$1,551.13**	**$1,332.89**	**$4,286.56**	**$1,122.30**	**$1,993.48**	**$1,749.73**	**$2,124.79**	**$777.53**
28	Investment Cost Calculation											
29		Depreciation		$49.06	$8.71	$7.59	$25.98	$6.54	$11.42	$10.01	$12.49	$4.51
30		Cost of Money		$31.75	$7.23	$6.20	$19.59	$5.19	$9.25	$8.12	$9.77	$3.60
31		Income Tax		$12.01	$2.73	$2.34	$7.41	$1.96	$3.50	$3.07	$3.70	$1.36
32		Ad Valorem		$5.21	$1.11	$0.96	$3.08	$0.81	$1.43	$1.26	$1.53	$0.56
33		Maintenance		$10.00	$4.15	$4.14	$11.09	$3.50	$5.74	$5.52	$6.16	$2.56
34		Total Capital Costs		$108.03	$23.94	$21.24	$67.14	$17.89	$31.34	$27.98	$33.65	$12.59
35	Development of Total Product Costs											
36		Element Specific Expenses		$0.0165	$0.0165	$0.0165	$0.0165	$0.0165	$0.0165	$0.0165	$0.0165	$0.0165
37		Direct Costs		$108.89	$24.81	$22.10	$68.00	$18.86	$32.21	$28.84	$34.52	$13.46
38		TELRIC		$114.56	$30.47	$27.77	$73.67	$24.52	$37.87	$34.51	$40.18	$19.12
39		Common		$1.34	$1.34	$1.34	$1.34	$1.34	$1.34	$1.34	$1.34	$1.34
40	**Total Loop TELRIC + Common**			**$115.89**	**$31.81**	**$29.10**	**$75.00**	**$25.86**	**$39.20**	**$35.84**	**$41.52**	**$20.46**
41	**Feeder Cost Calculations**											
42	Investments by Account		FRC									
43		Poles	1C	$3.41	$0.00	$0.00	$0.00	$0.00	$0.00	$0.33	$0.18	$0.00
44		Aerial Cbl Metallic	52C	$6.62	$0.00	$0.00	$0.00	$0.00	$0.00	$0.64	$0.34	$0.00
45		Conduit System	4C	$54.15	$83.65	$83.27	$131.14	$70.38	$131.19	$70.99	$79.75	$57.42
46		UG Cbl Metallic	5C	$22.60	$59.43	$57.87	$79.51	$42.98	$85.35	$47.36	$53.38	$39.91
47		Buried Cbl Metallic	45C	$132.61	$0.00	$0.00	$0.00	$0.00	$0.00	$7.04	$23.41	$0.00
48		UG Cbl Nonmetallic	85C	$17.06	$10.83	$5.01	$18.58	$9.69	$13.25	$6.09	$6.69	$3.46
49		Pair Gain—Digital	257C	$3,066.06	$154.93	$136.06	$833.16	$149.98	$252.79	$180.95	$326.95	$91.20
50		Buried Cbl Nonmetallic	845C	$3,041.00	$410.12	$180.63	$1,168.57	$95.29	$365.03	$295.40	$416.69	$7.85
51		Digital Switch	377C	$29.72	$29.72	$29.72	$29.72	$29.72	$29.72	$29.72	$29.72	$29.72
52		Land	20C	$4.33	$0.26	$0.23	$1.21	$0.25	$0.40	$0.29	$0.50	$0.17
53		Building	110C	$165.94	$9.90	$8.89	$46.25	$9.63	$15.15	$11.29	$19.12	$6.48
54		General Purpose Comp. (Billing)	361C	$0.0001	$0.0001	$0.0001	$0.0001	$0.0001	$0.0001	$0.0001	$0.0001	$0.0001
56		**Total Feeder Investment**		**$6,543.49**	**$768.84**	**$601.69**	**$2,308.13**	**$407.92**	**$892.87**	**$660.12**	**$956.72**	**$236.21**
57	Investment Cost Calculation											
58		Depreciation		$45.23	$4.47	$3.07	$14.88	$2.65	$5.43	$4.01	$6.13	$1.56
59		Cost of Money		$28.41	$3.55	$2.29	$10.29	$1.82	$4.07	$2.95	$4.28	$1.05
60		Income Tax		$10.74	$1.34	$0.86	$3.89	$0.69	$1.54	$1.11	$1.62	$0.40
61		Ad Valorem		$4.70	$0.55	$0.36	$1.66	$0.29	$0.64	$0.47	$0.69	$0.17
62		Maintenance		$6.93	$0.78	$0.53	$2.29	$0.43	$0.91	$0.70	$1.05	$0.27
63		Total Feeder Capital Costs		$96.00	$10.69	$7.11	$32.99	$5.89	$12.59	$9.24	$13.76	$3.47
64	Development of Total Product Costs											
65		Element Specific Expenses		$0.0165	$0.0165	$0.0165	$0.0165	$0.0165	$0.0165	$0.0165	$0.0165	$0.0165
66		Direct Costs		$98.36	$11.05	$7.47	$33.35	$8.25	$12.95	$9.60	$14.12	$3.83
67		TELRIC		$98.84	$13.32	$9.74	$35.63	$8.53	$15.23	$11.87	$16.39	$6.10
68		Common		$0.54	$0.54	$0.54	$0.54	$0.54	$0.54	$0.54	$0.54	$0.54
69	**Feeder TELRIC + Common**			**$99.18**	**$13.86**	**$10.28**	**$36.16**	**$9.06**	**$15.76**	**$12.41**	**$16.93**	**$6.64**
70	**Distribution Cost Calculations**											
71	Investments by Account		FRC									
72		Poles	1C	$14.10	$16.38	$18.68	$64.82	$15.29	$24.84	$25.64	$27.78	$10.28
73		Aerial Cbl Metallic	52C	$27.39	$31.58	$35.54	$115.08	$29.17	$47.63	$48.60	$52.61	$19.90
74		Aerial Wire	3C	$0.00	$0.22	$0.73	$10.80	$0.53	$0.80	$1.20	$1.34	$0.06
75		UG Cbl Metallic	5C	$2.68	$3.67	$3.76	$0.00	$5.36	$0.65	$0.72	$0.76	$7.14
76		Buried Cbl Metallic	45C	$575.17	$625.16	$659.54	$1,566.35	$563.32	$876.12	$877.97	$945.66	$419.22
77		Intrabuilding Cbl., Exch., Metallic	62C	$7.61	$11.36	$8.82	$0.00	$15.95	$1.11	$1.26	$1.38	$21.05
78		Buried Drop	35C	$71.97	$80.04	$88.42	$186.71	$72.17	$126.52	$122.25	$117.53	$54.37
79		Aerial Drop	42C	$12.05	$13.88	$15.72	$34.66	$12.58	$22.85	$21.96	$21.01	$9.30
80		General Purpose Comp. (Billing)	361C	$0.0001	$0.0001	$0.0001	$0.0001	$0.0001	$0.0001	$0.0001	$0.0001	$0.0001
81		**Total Distribution Investment**		**$710.97**	**$782.29**	**$831.20**	**$1,978.43**	**$714.38**	**$1,100.60**	**$1,099.61**	**$1,168.07**	**$541.32**
82	Investment Cost Calculation											
83		Depreciation		$3.83	$4.24	$4.53	$11.12	$3.88	$5.89	$6.00	$6.37	$2.93
84		Cost of Money		$3.35	$3.88	$3.91	$9.30	$3.36	$5.18	$5.17	$5.49	$2.55
85		Income Tax		$1.27	$1.39	$1.48	$3.52	$1.27	$1.96	$1.96	$2.08	$0.97
86		Ad Valorem		$0.51	$0.56	$0.60	$1.42	$0.51	$0.78	$0.79	$0.84	$0.39
87		Maintenance		$3.06	$3.36	$3.61	$8.80	$3.07	$4.83	$4.82	$5.11	$2.29
88		Total Distribution Capital Costs		$12.02	$13.25	$14.13	$34.15	$12.10	$18.75	$18.74	$19.89	$9.12
89	Development of Total Product Costs											
90		Element Specific Expenses		$0.0165	$0.0165	$0.0165	$0.0165	$0.0165	$0.0165	$0.0165	$0.0165	$0.0165
91		Direct Costs		$12.55	$13.78	$14.65	$34.67	$12.63	$19.27	$19.27	$20.42	$9.65
92		TELRIC		$15.94	$17.17	$18.04	$38.06	$16.02	$22.66	$22.66	$23.81	$13.04
93		Common		$0.80	$0.80	$0.80	$0.80	$0.80	$0.80	$0.80	$0.80	$0.80
94	**Distribution TELRIC + Common**			**$16.74**	**$17.97**	**$18.84**	**$38.86**	**$16.82**	**$23.46**	**$23.46**	**$24.61**	**$13.84**

Section A - Unbundled Loop
Wire Center Loop Costs 2W

	A	B	C	AJ	AK	AL	AM	AN	AO	AP	AQ	AR
1	South Dakota											
2	Qwest Defaults 7/20/01 10:04:18 AM											
3	**2W Wire Center Cost Calculations**											
4		**Office Name**		**Sioux Falls Southeast**	**Sioux Falls Southwest**	**Tea**	**Timber Lake**	**Volga**	**Vermillion**	**Whitewood**	**Warwick**	**Watertown**
5		CLLI		SXFLSDSE	SXFLSDSW	TEA-SDCO	TMLKSDCO	VOLGSDCO	VRMLSDCO	WHWDSDCO	WRWKSDCO	WTWSDCO
6		Zone		1	1	1	3	3	3	3	2	3
7		Lines		3867	13218	1332	556	1298	8788	647	4104	15903
8	**Total Loop Cost Calculations**											
9	Investments by Account (From Loop Module Output or Loop Length Zone Data)		FRC									
10		Poles	1C	$21.32	$19.70	$31.65	$17.74	$38.66	$15.21	$48.21	$22.33	$20.32
11		Aerial Cbl Metallic	52C	$39.26	$38.19	$58.63	$34.45	$71.75	$27.68	$86.42	$42.92	$37.56
12		Aerial Wire	3C	$2.15	$0.07	$2.83	$0.00	$3.32	$1.86	$7.19	$0.44	$1.90
13		Conduit System	4C	$4.52	$110.10	$15.18	$29.52	$20.33	$70.49	$29.83	$40.32	$88.35
14		UG Cbl Metallic	5C	$6.06	$79.75	$9.15	$19.61	$11.75	$55.16	$13.85	$21.28	$62.69
15		Buried Cbl Metallic	45C	$670.79	$750.57	$855.28	$594.47	$1,076.89	$453.61	$1,254.45	$798.62	$638.58
16		Intrabuilding Cbl., Exch., Metallic	62C	$19.13	$8.68	$0.94	$23.49	$0.37	$16.15	$1.04	$7.86	$10.58
17		UG Cbl Nonmetallic	85C	$3.15	$6.39	$2.40	$9.37	$3.46	$4.97	$8.96	$11.01	$7.66
18		Pair Gain—Digital	257C	$214.42	$71.64	$251.87	$1,737.42	$799.02	$95.17	$801.13	$375.34	$136.87
19		Buried Cbl Nonmetallic	845C	$58.90	$60.96	$189.27	$2,023.35	$1,157.96	$186.59	$1,015.69	$353.71	$342.12
20		Buried Drop	35C	$77.08	$100.50	$132.70	$50.69	$155.52	$66.82	$149.96	$104.04	$91.10
21		Aerial Drop	42C	$13.61	$17.85	$24.05	$8.49	$28.63	$11.97	$27.25	$18.60	$16.16
22		Digital Switch	377C	$29.72	$29.72	$29.72	$29.72	$29.72	$29.72	$29.72	$29.72	$29.72
23		Land	20C	$0.34	$0.14	$0.39	$2.47	$1.16	$0.17	$1.16	$0.57	$0.23
24		Building	110C	$13.09	$5.44	$15.10	$94.72	$44.42	$6.70	$44.54	$21.71	$8.93
25		General Purpose Comp. (Billing)	361C	$0.0001	$0.0001	$0.0001	$0.0001	$0.0001	$0.0001	$0.0001	$0.0001	$0.0001
26												
27		**Total Loop Investment**		**$1,173.55**	**$1,299.80**	**$1,619.14**	**$4,675.51**	**$3,442.96**	**$1,042.26**	**$3,619.19**	**$1,848.47**	**$1,492.80**
28	Investment Cost Calculation											
29		Depreciation		$7.26	$7.14	$9.81	$30.84	$21.30	$5.95	$21.84	$11.24	$8.44
30		Cost of Money		$5.33	$6.11	$7.40	$20.65	$15.57	$4.86	$15.93	$8.41	$6.98
31		Income Tax		$2.01	$2.31	$2.80	$7.81	$5.89	$1.84	$6.02	$3.18	$2.63
32		Ad Valorem		$0.84	$0.83	$1.16	$3.36	$2.47	$0.75	$2.53	$1.33	$1.07
33		Maintenance		$4.01	$4.47	$5.46	$7.03	$8.15	$3.06	$8.89	$5.20	$4.26
34		**Total Capital Costs**		$19.45	$20.97	$26.62	$69.69	$53.39	$16.45	$55.22	$29.36	$23.37
35	Development of Total Product Costs											
36		Element Specific Expenses		$0.0165	$0.0165	$0.0165	$0.0165	$0.0165	$0.0165	$0.0165	$0.0165	$0.0165
37		Direct Costs		$20.32	$21.84	$27.49	$70.55	$54.26	$17.31	$56.08	$30.22	$24.23
38		TELRIC		$25.98	$27.50	$33.15	$76.22	$59.92	$22.98	$61.75	$35.89	$29.90
39		Common		$1.34	$1.34	$1.34	$1.34	$1.34	$1.34	$1.34	$1.34	$1.34
40	**Total Loop TELRIC + Common**			**$27.32**	**$28.84**	**$34.49**	**$77.55**	**$61.25**	**$24.31**	**$63.08**	**$37.22**	**$31.23**
41	**Feeder Cost Calculations**											
42	Investments by Account		FRC									
43		Poles	1C	$0.00	$0.00	$5.73	$7.49	$8.80	$0.00	$2.43	$0.72	$0.00
44		Aerial Cbl Metallic	52C	$0.00	$0.00	$11.13	$14.54	$13.21	$0.00	$4.72	$1.39	$0.00
45		Conduit System	4C	$4.52	$110.10	$15.18	$29.52	$20.33	$70.49	$29.83	$40.32	$88.35
46		UG Cbl Metallic	5C	$0.00	$76.78	$8.94	$12.24	$11.69	$48.21	$12.93	$18.67	$58.86
47		Buried Cbl Metallic	45C	$0.00	$0.00	$108.13	$159.24	$161.55	$8.15	$70.92	$13.32	$0.00
48		UG Cbl Nonmetallic	85C	$3.15	$6.39	$2.40	$9.37	$3.46	$4.97	$8.96	$11.01	$7.66
49		Pair Gain—Digital	257C	$214.42	$71.64	$251.87	$1,737.42	$799.02	$95.17	$801.13	$375.34	$136.87
50		Buried Cbl Nonmetallic	845C	$58.90	$60.96	$189.27	$2,023.35	$1,157.96	$186.59	$1,015.69	$353.71	$342.12
51		Digital Switch	377C	$29.72	$29.72	$29.72	$29.72	$29.72	$29.72	$29.72	$29.72	$29.72
52		Land	20C	$0.34	$0.14	$0.39	$2.47	$1.16	$0.17	$1.16	$0.57	$0.23
53		Building	110C	$13.09	$5.44	$15.10	$94.72	$44.42	$6.70	$44.54	$21.71	$8.93
54		General Purpose Comp. (Billing)	361C	$0.0001	$0.0001	$0.0001	$0.0001	$0.0001	$0.0001	$0.0001	$0.0001	$0.0001
55												
56		**Total Feeder Investment**		**$324.14**	**$361.17**	**$637.85**	**$4,120.07**	**$2,249.31**	**$460.16**	**$2,022.02**	**$866.48**	**$672.75**
57	Investment Cost Calculation											
58		Depreciation		$2.58	$2.08	$4.38	$27.84	$14.70	$2.66	$13.48	$5.91	$3.93
59		Cost of Money		$1.33	$1.69	$2.78	$18.03	$9.96	$2.07	$8.89	$3.78	$3.10
60		Income Tax		$0.50	$0.64	$1.05	$6.82	$3.77	$0.78	$3.36	$1.43	$1.17
61		Ad Valorem		$0.23	$0.26	$0.46	$2.96	$1.61	$0.32	$1.45	$0.62	$0.48
62		Maintenance		$0.35	$0.40	$1.10	$4.70	$2.85	$0.50	$2.26	$0.93	$0.69
63		**Total Feeder Capital Costs**		$4.99	$5.05	$9.77	$60.35	$32.89	$6.34	$29.45	$12.67	$9.37
64	Development of Total Product Costs											
65		Element Specific Expenses		$0.0165	$0.0165	$0.0165	$0.0165	$0.0165	$0.0165	$0.0165	$0.0165	$0.0165
66		Direct Costs		$5.35	$5.41	$10.13	$60.71	$33.25	$6.70	$29.81	$13.03	$9.73
67		TELRIC		$7.63	$7.69	$12.41	$62.98	$35.53	$8.97	$32.08	$15.31	$12.01
68		Common		$0.54	$0.54	$0.54	$0.54	$0.54	$0.54	$0.54	$0.54	$0.54
69	**Feeder TELRIC + Common**			**$8.17**	**$8.22**	**$12.94**	**$63.52**	**$36.06**	**$9.51**	**$32.62**	**$15.85**	**$12.55**
70	**Distribution Cost Calculations**											
71	Investments by Account		FRC									
72		Poles	1C	$21.32	$19.70	$25.92	$10.25	$31.85	$15.21	$45.78	$21.61	$20.32
73		Aerial Cbl Metallic	52C	$39.26	$38.19	$47.50	$19.91	$58.54	$27.68	$81.71	$41.52	$37.56
74		Aerial Wire	3C	$2.15	$0.07	$2.83	$0.00	$3.32	$1.86	$7.19	$0.44	$1.90
75		UG Cbl Metallic	5C	$6.06	$2.97	$0.21	$7.37	$0.06	$6.95	$0.72	$2.61	$3.83
76		Buried Cbl Metallic	45C	$670.79	$750.57	$747.15	$435.23	$915.34	$445.46	$1,183.53	$785.30	$638.58
77		Intrabuilding Cbl., Exch., Metallic	62C	$19.13	$8.68	$0.94	$23.49	$0.37	$16.15	$1.04	$7.86	$10.58
78		Buried Drop	35C	$77.08	$100.50	$132.70	$50.69	$155.52	$66.82	$149.96	$104.04	$91.10
79		Aerial Drop	42C	$13.61	$17.85	$24.05	$8.49	$28.63	$11.97	$27.25	$18.60	$16.16
80		General Purpose Comp. (Billing)	361C	$0.0001	$0.0001	$0.0001	$0.0001	$0.0001	$0.0001	$0.0001	$0.0001	$0.0001
81		**Total Distribution Investment**		**$849.41**	**$938.63**	**$981.29**	**$565.43**	**$1,193.63**	**$692.09**	**$1,497.17**	**$981.98**	**$820.05**
82	Investment Cost Calculation											
83		Depreciation		$4.67	$5.08	$5.43	$3.00	$6.60	$3.28	$8.37	$5.33	$4.51
84		Cost of Money		$4.00	$4.42	$4.61	$2.62	$5.61	$2.79	$7.04	$4.62	$3.88
85		Income Tax		$1.51	$1.67	$1.75	$0.99	$2.12	$1.05	$2.66	$1.75	$1.46
86		Ad Valorem		$0.61	$0.67	$0.70	$0.40	$0.86	$0.42	$1.07	$0.70	$0.59
87		Maintenance		$3.66	$4.08	$4.36	$2.33	$5.30	$2.56	$6.63	$4.27	$3.58
88		**Total Distribution Capital Costs**		$14.48	$15.92	$16.85	$9.34	$20.50	$10.11	$25.77	$16.68	$13.99
89	Development of Total Product Costs											
90		Element Specific Expenses		$0.0165	$0.0165	$0.0165	$0.0165	$0.0165	$0.0165	$0.0165	$0.0165	$0.0165
91		Direct Costs		$14.98	$16.45	$17.38	$9.86	$21.02	$10.63	$26.30	$17.21	$14.52
92		TELRIC		$18.37	$19.84	$20.77	$13.26	$24.41	$14.02	$29.69	$20.60	$17.91
93		Common		$0.80	$0.80	$0.80	$0.80	$0.80	$0.80	$0.80	$0.80	$0.80
94	**Distribution TELRIC + Common**			**$19.17**	**$20.64**	**$21.57**	**$14.05**	**$25.21**	**$14.82**	**$30.49**	**$21.40**	**$18.71**

Section A - Unbundled Loop
Wire Center Loop Costs 2W

	A	B	C	AS
1	South Dakota			
2	Qwest Defaults 7/20/01 10:04:18 AM			
3	**2W Wire Center Cost Calculations**			
4		**Office Name**		**Yankton**
5		CLLI		YNTNSDCO
6		Zone		3
7		Lines		11736
8	**Total Loop Cost Calculations**			
9	Investments by Account (From Loop Module Output or Loop Length Zone Data)		FRC	
10		Poles	1C	$21.22
11		Aerial Cbl Metallic	52C	$39.96
12		Aerial Wire	3C	$1.25
13		Conduit System	4C	$94.66
14		UG Cbl Metallic	5C	$64.87
15		Buried Cbl Metallic	45C	$718.05
16		Intrabuilding Cbl., Exch., Metallic	62C	$7.10
17		UG Cbl Nonmetallic	85C	$8.92
18		Pair Gain—Digital	257C	$134.30
19		Buried Cbl Nonmetallic	845C	$372.58
20		Buried Drop	35C	$97.62
21		Aerial Drop	42C	$17.31
22		Digital Switch	377c	$28.72
23		Land	20C	$0.23
24		Building	110C	$8.79
25		General Purpose Comp. (Billing)	361C	$0.0001
26				
27		**Total Loop Investment**		**$1,616.69**
28	Investment Cost Calculation			
29		Depreciation		$9.05
30		Cost of Money		$7.55
31		Income Tax		$2.86
32		Ad Valorem		$1.16
33		Maintenance		$4.67
34		Total Capital Costs		$25.29
35	Development of Total Product Costs			
36		Element Specific Expenses		$0.0165
37		Direct Costs		$26.16
38		TELRIC		$31.82
39		Common		$1.34
40	**Total Loop TELRIC + Common**			**$33.16**
41	**Feeder Cost Calculations**			
42	Investments by Account		FRC	
43		Poles	1C	$0.00
44		Aerial Cbl Metallic	52C	$0.00
45		Conduit System	4C	$94.66
46		UG Cbl Metallic	5C	$62.26
47		Buried Cbl Metallic	45C	$0.00
48		UG Cbl Nonmetallic	85C	$8.92
49		Pair Gain—Digital	257C	$134.30
50		Buried Cbl Nonmetallic	845C	$372.58
51		Digital Switch	377C	$28.72
52		Land	20C	$0.23
53		Building	110C	$8.79
54		General Purpose Comp. (Billing)	361C	$0.0001
55				
56		**Total Feeder Investment**		**$711.49**
57	Investment Cost Calculation			
58		Depreciation		$4.10
59		Cost of Money		$3.29
60		Income Tax		$1.25
61		Ad Valorem		$0.51
62		Maintenance		$0.73
63		Total Feeder Capital Costs		$9.88
64	Development of Total Product Costs			
65		Element Specific Expenses		$0.0165
66		Direct Costs		$10.23
67		TELRIC		$12.51
68		Common		$0.54
69	**Feeder TELRIC + Common**			**$13.05**
70	**Distribution Cost Calculations**			
71	Investments by Account		FRC	
72		Poles	1C	$21.22
73		Aerial Cbl Metallic	52C	$39.96
74		Aerial Wire	3C	$1.25
75		UG Cbl Metallic	5C	$2.69
76		Buried Cbl Metallic	45C	$718.05
77		Intrabuilding Cbl., Exch., Metallic	62C	$7.10
78		Buried Drop	35C	$97.62
79		Aerial Drop	42C	$17.31
80		General Purpose Comp. (Billing)	361C	$0.0001
81		**Total Distribution Investment**		**$905.20**
82	Investment Cost Calculation			
83		Depreciation		$4.94
84		Cost of Money		$4.26
85		Income Tax		$1.61
86		Ad Valorem		$0.65
87		Maintenance		$3.85
88		Total Distribution Capital Costs		$15.41
89	Development of Total Product Costs			
90		Element Specific Expenses		$0.0165
91		Direct Costs		$15.94
92		TELRIC		$19.33
93		Common		$0.80
94	**Distribution TELRIC + Common**			**$20.13**

	A	B	C	D	E	F
1	Qwest Defaults 7/20/01 10:04:18 AM					
2			**Unbundled Loop**			
3			**South Dakota**			
4	**Description**	**Default Source**	**Default Value**	**Overrides**	**This Run**	**Instructions**
5				AP p15		
6	Unbundled Loop Grooming Investment 2-Wire	sA p18 G9	$63.80		63.80	Enter unbundled loop grooming investment.
7	Loop Billing and Collection Expense	AP p10 F22	$0.0165		0.0165	Enter billing and collection expense per line.
8	Unbundled Loop Grooming Investment 4-Wire	sA p18 G17	$149.78		149.78	Calculated 4-Wire unbundled loop grooming investment.
9						All Investments are EFI
10	This Run equals Default Value if Overrides is empty					
11	s = section					
12	p = page					
13	c = column					
14	r = row					
15	Upper Case letter with number indicates a cell location, i.e. G40					
16	The spreadsheet shows the Override data entered by the user in ICM's custom input screens. If the user					
17	has input override data, the spreadsheet will determine this and display the override data in the					
18	Overrides column. The this run column will show the Override or the Default Value if no override has					
19	been entered.					
20						

Cell: D8
Comment: Changes in 2-wire unbundled loop grooming will automatically change the 4-wire unbundled loop grooming proportionately.

	A	B	C	D	E	F	G	H
1	**Litespan 2000 Unbundled Loop Grooming Design**							
2								
3	**State:**	**South Dakota**	**2-WIRE**				**Weighted**	
4			**Investment**		**DLC %**		**Cost**	
5					From Loop Grooming Data		cC*cE	
6	**Option 1**	CO Chan & Term	$149.02	H47	0.2595		$38.67	257C
7	**Option 2**	CO Chan & Term	$585.64	H95	0.0429		$25.13	257C
8								
9	**Weighted average demultiplexing investment per DS0**						$63.80	
10								
11								
12			**4-WIRE**				**Weighted**	
13			**Investment**		**DLC %**		**Cost**	
14	**Option 1**	CO Chan & Term	$343.72	H69	0.2595		$89.19	257C
15	**Option 2**	CO Chan & Term	$1,412.05	H118	0.0429		$60.58	257C
16								
17	**Weighted average demultiplexing investment per DS0**						$149.78	
18								
19								
20	**Per Occurrence Investment - Option 1 & 2 weighted by Lines Integrated**							
21								
22		**Option**		**Quantity**	**Option %**	**Investment**	**Wtd Invest**	
23				From Loop Grooming Data	cD/D26	C7 & C6	cE*cF	
24		Option 2		12,692	0.1419	$585.64	$83.09	
25		Option 1		76,761	0.8581	$149.02	$127.88	
26		Total		89,453	1.0000		$210.97	

	A	B	C	D	E	F	G	H
27	**South Dakota**	**LS2000 Unbundled Loop - for use with integrated TR-303 DS1s**						
28	2-WIRE	Option 1						
29	**Parts**				**Quantity**	**Unit Cost**		**Total Cost**
30	**Hardware & Commons for COT TR-008**					From Loop Grooming Data		cE*cF
31	COT 7' Bay Copper Fed				1	12,040.58		$ 12,040.58
32	COT Common Plugs Copper Fed (TR-008)				1	11,710.89		$ 11,710.89
33	COT Channel Bank Common PIE				3	1,567.38		$ 4,702.14
34	CPOTS Channel Units (Quad)				168	285.19		$ 47,912.36
35				Total				$76,365.97
36	**Software & Hardware Option**							
37	TR-303 Generic System Software				1			
38	OMAPS				1			
39				Total cost	System		H31:H33	$28,453.61
40					Channel Units		H34	$47,912.36
41								
42				At fill	System		H39/H71	43,774.78
43					Channel Units		H40/F72	56,367.48
44					Total			100,142.27
45								
46				System Capacity (DS0s)				672
47				Cost per DS0				$149.02
48								
49	4-WIRE	Option 1				From Loop Grooming Data		
50	**Parts**				**Quantity**	**Unit Cost**		**Total Cost**
51	**Hardware & Commons for COT TR-008**							cE*cF
52	COT 7' Bay Copper Fed				1	12,040.58		$ 12,040.58
53	COT Common Plugs Copper Fed (TR-008)				1	11,710.89		$ 11,710.89
54	COT Channel Bank Common PIE				3	1,567.38		$ 4,702.14
55	Universal 4 Wire Dual Card				84	725.68		$ 60,957.13
56				Total				$89,410.74
57	**Software & Hardware Option**							
58	TR-303 Generic System Software				1			
59	OMAPS				1			
60								
61				Total cost	System	H52+H53+H54		$28,453.61
62					Channel Units		H55	$60,957.13
63								
64				At fill	System		H61/F71	43,774.78
65					Channel Units		H62/F72	71,714.27
66					Total			115,489.06
67								
68				System Capacity (DS0s)			4*E55	336
69				Cost per DS0			H66/H68	$343.72
70								
71				System Fill		0.65		
72				Channel Unit Fill		0.85		
73								
74								

	A	B	C	D	E	F	G	H
75	**South Dakota**	**LS2000 Unbundled Loop - for use with integrated TR-008 DS1s**						
76	2-WIRE	Option 2				From Loop Grooming Data		
77	**Parts**				**Quantity**	**Unit Cost**		**Total Cost**
78	**Hardware & Commons for COT TR-008**							cE*cF
79	COT 7' Bay Copper Fed				1	12,040.58		$12,040.58
80	COT Common Plugs Copper Fed (TR-008)				1	11,710.89		$11,710.89
81	COT Channel Bank Common PIE				3	1,567.38		$4,702.14
82	DS1 Channel Units				56	415.74		$23,281.18
83	CPOTS Channel Units (Quad)				26	285.19		$7,415.01
84				Total				$59,149.80
85	**Software & Hardware Option**							
86	TR-303 Generic System Software				1			
87	OMAPS				1			
88	System capacity		672		Total cost	System	H79+H80+H81	$28,453.61
89	Unbundled loop %		0.15			Channel Units	H82+H83	$30,696.19
90	Unbundled loops		101			Total		$59,149.80
91	POTS channel units		26					
92								
93								
94				Working DS0s			C90	101
95				Cost per DS0			H90/H94	$585.64
96								
97								
98								
99	4-WIRE	Option 2				From Loop Grooming Data		
100	**Parts**				**Quantity**	**Unit Cost**		**Total Cost**
101	**Hardware & Commons for COT TR-008**							cE*cF
102	COT 7' Bay Copper Fed				1	12,040.58		$12,040.58
103	COT Common Plugs Copper Fed (TR-008)				1	11,710.89		$11,710.89
104	COT Channel Bank Common PIE				3	1,567.38		$4,702.14
105	DS1 Channel Units				56	415.74		$23,281.18
106	Universal 4 Wire Dual Card				26	725.68		$18,867.68
107				Total				$70,602.47
108	**Software & Hardware Option**							
109	TR-303 Generic System Software				1			
110	OMAPS				1			
111	System capacity		336		Total cost	System	H102+H103+H104	$28,453.61
112	Unbundled loop %		0.15			Channel Units	H105+H106	$42,148.86
113	Unbundled loops		50			Total		$70,602.47
114	POTS channel units		26					
115								
116								
117				Working DS0s			C113	50
118				Cost per DS0			H113/H117	$1,412.05
119								

	A	B	C	D	E	F
1	**Litespan 2000 Unbundled Loop Grooming Design**					
2						
3						
4	**State:**					**South Dakota**
5						
6	**Option 1**	**LS2000 Unbundled Loop - for use with integrated TR-303 DS1s**				
7		DLC%				25.95%
8	**Option 2**	**LS2000 Unbundled Loop - for use with integrated TR-008 DS1s**				
9		DLC%				4.29%
10						
11						
12	**Integrated Loop Demultiplexing Equipment**					
13		7 foot Bay				$12,040.58
14		Cards TR008				$11,710.89
15		Common PIE				$1,567.38
16		Quad Card				$285.19
17		DS1 Card				$415.74
18		4 Wire Card				$725.68
19		Quad ISDN Card				$860.45
20	**Line Quantities**					
21		Total				295,812
22		32 Line				11,051
23		96/192 Line				12,692
24		672/1344 Line				76,761
25		Total Demux				89,453

South Dakota

Qwest Defaults 7/20/01 10:04:18 AM

Feeder Model - 12 Kilofoot crossover

Pairs Per Site - Engineering Standard

Directly Assigned Feeder

CLLI	1C	52C	4C	5C	45C	85C	257C	845C
ABRDSDCO	$0.00	$0.00	$85.23	$56.87	$0.00	$7.31	$158.67	$344.78
ARTNSDCO	$1.12	$2.17	$21.11	$11.06	$75.48	$4.59	$755.68	$1,096.33
BLFRSDCO	$0.86	$1.67	$104.53	$68.27	$19.67	$10.31	$354.54	$522.49
BLHKSDCE	$0.50	$0.98	$35.54	$14.60	$17.89	$11.41	$397.65	$426.86
CAVRSDCO	$4.73	$9.19	$37.14	$7.99	$182.62	$18.59	$3,569.00	$3,846.21
CHBLSDCO	$3.01	$5.84	$18.54	$11.35	$69.06	$2.53	$349.64	$392.63
CLMNSDCO	$4.01	$7.78	$28.58	$13.43	$104.26	$7.63	$914.52	$1,464.11
CNTNSDCO	$1.23	$2.39	$21.07	$13.07	$51.44	$2.71	$259.93	$369.36
DDWDSDCO	$1.20	$2.33	$77.57	$41.67	$34.31	$15.90	$452.32	$683.47
DESMSDCO	$0.52	$1.02	$22.34	$12.22	$73.40	$4.38	$761.82	$844.22
ELPNSDCO	$1.99	$3.86	$21.01	$11.89	$143.89	$3.75	$593.32	$753.31
FLNDSDCO	$5.31	$10.30	$18.22	$11.01	$144.93	$2.62	$493.20	$660.63
FTPRSDCE	$1.96	$3.80	$22.14	$12.95	$101.13	$3.57	$328.44	$589.10
HLCYSDCO	$0.74	$1.44	$11.79	$5.18	$13.72	$3.47	$1,015.50	$1,380.90
HRBGSDCO	$1.02	$1.98	$9.12	$2.78	$41.92	$3.81	$604.27	$567.64
HURNSDCO	$0.00	$0.00	$84.29	$57.62	$0.00	$5.96	$159.91	$187.62
IRQSSDCO	$3.78	$7.35	$37.27	$12.19	$103.06	$14.83	$2,083.76	$2,125.24
LEADSDCO	$0.00	$0.00	$105.74	$66.76	$0.00	$12.55	$375.05	$611.54
LKPRSDCO	$4.02	$7.81	$29.48	$14.45	$104.12	$7.32	$1,305.36	$1,544.49
MCINSDCO	$9.79	$19.01	$47.13	$20.77	$335.12	$13.83	$1,894.50	$2,762.49
MDSNSDCE	$0.00	$0.00	$97.37	$61.29	$0.00	$11.73	$224.15	$327.54
MLBNSDCO	$0.00	$0.00	$77.23	$46.01	$0.00	$11.69	$346.46	$659.23
MLLRSDCO	$2.49	$4.83	$17.84	$10.12	$116.66	$3.16	$969.59	$970.71
MRTWSDCO	$3.41	$6.62	$54.15	$22.60	$132.61	$17.06	$3,066.06	$3,041.00
MTCHSDCO	$0.00	$0.00	$93.65	$59.43	$0.00	$10.83	$154.93	$410.12
PIRRSDCO	$0.00	$0.00	$83.27	$57.87	$0.00	$5.01	$136.06	$180.63
RDFDSDCO	$0.00	$0.00	$131.14	$79.51	$0.00	$18.58	$833.16	$1,168.57
RPCYSDCO	$0.00	$0.00	$70.38	$42.98	$0.00	$9.69	$149.98	$95.29
RPVYSDCO	$0.00	$0.00	$131.19	$85.35	$0.00	$13.25	$252.79	$365.03
SPRFSDCO	$0.33	$0.64	$70.99	$47.36	$7.04	$6.09	$180.95	$295.40
STRGSDCO	$0.18	$0.34	$79.75	$53.38	$23.41	$6.69	$326.95	$416.69
SXFLSDCO	$0.00	$0.00	$57.42	$39.91	$0.00	$3.46	$91.20	$7.85
SXFLSDSE	$0.00	$0.00	$4.52	$0.00	$0.00	$3.15	$214.42	$58.90
SXFLSDSW	$0.00	$0.00	$110.10	$76.78	$0.00	$6.39	$71.64	$60.96
TEA-SDCO	$5.73	$11.13	$15.18	$8.94	$108.13	$2.40	$251.87	$189.27
TMLKSDCO	$7.49	$14.54	$29.52	$12.24	$159.24	$9.37	$1,737.42	$2,023.35
VOLGSDCO	$6.80	$13.21	$20.33	$11.69	$161.55	$3.46	$799.02	$1,157.96
VRMLSDCO	$0.00	$0.00	$70.49	$48.21	$8.15	$4.97	$95.17	$186.59

	A	B	C	D	E	F	G	H	I
1		South Dakota							
2		Qwest Defaults 7/20/01 10:04:18 AM							
3									
4		Feeder Model - 12 Kilofoot crossover							
5									
6		Pairs Per Site - Engineering Standard							
7									
8		**Directly Assigned Feeder**							
9	**CLLI**	**1C**	**52C**	**4C**	**5C**	**45C**	**85C**	**257C**	**845C**
48	WHWDSDCO	$2.43	$4.72	$29.83	$12.93	$70.92	$8.96	$801.13	$1,015.69
49	WRWKSDCO	$0.72	$1.39	$40.32	$18.67	$13.32	$11.01	$375.34	$353.71
50	WTTWSDCO	$0.00	$0.00	$88.35	$58.86	$0.00	$7.66	$136.87	$342.12
51	YNTNSDCO	$0.00	$0.00	$94.66	$62.28	$0.00	$8.92	$134.30	$372.58

South Dakota

Qwest Defaults 7/20/01 10:04:18 AM

	62C	35C	42C
NID Investments	$13.34	$27.24	$4.40

Directly Assigned Distribution

CLLI	1C	52C	3C	5C	45C	62C	35C	42C
ABRDSDCO	$18.23	$34.46	$0.94	$6.23	$630.32	$19.10	$78.44	$14.01
ARTNSDCO	$63.02	$108.49	$13.90	$3.29	$1,305.87	$10.78	$151.59	$28.04
BLFRSDCO	$29.41	$52.86	$4.25	$5.80	$797.79	$18.71	$103.47	$18.81
BLHKSDCE	$32.72	$61.11	$2.44	$2.47	$1,031.36	$7.51	$125.88	$22.95
CAVRSDCO	$2.33	$4.53	$0.00	$0.05	$96.46	$2.22	$78.91	$13.21
CHBLSDCO	$30.35	$58.09	$0.85	$1.66	$1,058.13	$4.60	$124.57	$22.64
CLMNSDCO	$1.61	$3.12	$0.00	$10.98	$100.09	$37.18	$32.24	$5.40
CNTNSDCO	$22.16	$41.32	$1.72	$4.63	$710.86	$14.93	$103.30	$18.71
DDWDSDCO	$25.91	$47.44	$2.88	$1.62	$768.00	$4.65	$124.08	$22.36
DESMSDCO	$40.05	$73.98	$3.80	$0.39	$1,190.21	$0.69	$147.37	$26.96
ELPNSDCO	$28.28	$52.52	$2.41	$0.86	$897.07	$1.63	$111.64	$19.77
FLNDSDCO	$58.71	$100.16	$13.86	$4.51	$1,181.26	$14.47	$99.18	$17.68
FTPRSDCE	$36.39	$67.55	$3.12	$0.32	$1,103.56	$0.54	$153.14	$28.12
HLCYSDCO	$49.58	$88.49	$7.79	$0.41	$1,258.19	$0.64	$162.53	$29.80
HRBGSDCO	$23.90	$45.64	$0.77	$5.27	$817.47	$17.76	$101.81	$18.65
HURNSDCO	$17.64	$33.23	$1.03	$4.35	$600.41	$13.48	$91.02	$16.26
IRQSSDCO	$27.31	$53.04	$0.00	$0.37	$996.54	$0.65	$137.59	$25.16
LEADSDCO	$28.34	$51.29	$3.75	$3.04	$801.57	$9.23	$108.24	$19.36
LKPRSDCO	$46.50	$86.30	$4.00	$0.00	$1,380.55	$0.00	$168.71	$31.32
MCINSDCO	$12.57	$24.41	$0.00	$4.55	$519.38	$13.94	$63.48	$10.63
MDSNSDCE	$12.84	$24.75	$0.18	$4.19	$492.91	$11.25	$73.44	$12.73
MLBNSDCO	$30.38	$57.15	$1.84	$0.65	$984.07	$1.58	$136.61	$24.89
MLLRSDCO	$21.42	$41.60	$0.00	$0.87	$819.08	$1.42	$113.29	$20.22
MRTWSDCO	$14.10	$27.39	$0.00	$2.68	$575.17	$7.61	$71.97	$12.05
MTCHSDCO	$16.38	$31.58	$0.22	$3.67	$625.16	$11.36	$80.04	$13.88
PIRRSDCO	$18.68	$35.54	$0.73	$3.76	$659.54	$8.82	$88.42	$15.72
RDFDSDCO	$64.82	$115.08	$10.80	$0.00	$1,566.35	$0.00	$186.71	$34.66
RPCYSDCO	$15.29	$29.17	$0.53	$5.36	$563.32	$15.95	$72.17	$12.58
RPVYSDCO	$24.94	$47.63	$0.80	$0.65	$876.12	$1.11	$126.52	$22.85
SPRFSDCO	$25.64	$48.60	$1.20	$0.72	$877.97	$1.26	$122.25	$21.96
STRGSDCO	$27.78	$52.61	$1.34	$0.76	$945.66	$1.38	$117.53	$21.01
SXFLSDCO	$10.28	$19.90	$0.06	$7.14	$419.22	$21.05	$54.37	$9.30
SXFLSDSE	$21.32	$39.26	$2.15	$6.06	$670.79	$19.13	$77.08	$13.61
SXFLSDSW	$19.70	$38.19	$0.07	$2.97	$750.57	$8.68	$100.50	$17.95
TEA-SDCO	$25.92	$47.50	$2.83	$0.21	$747.15	$0.94	$132.70	$24.05
TMLKSDCO	$10.25	$19.91	$0.00	$7.37	$435.23	$23.49	$50.69	$8.49
VOLGSDCO	$31.85	$58.54	$3.32	$0.06	$915.34	$0.37	$155.52	$28.63
VRMLSDCO	$15.21	$27.68	$1.86	$6.95	$445.46	$16.15	$66.82	$11.97

	A	J	K	L	M	N	O	P	Q
1		South Dakota							
2		Qwest Defaults 7/20/01 10:04:18 AM							
3									
4							62C	35C	42C
5						NID Investments	$13.34	$27.24	$4.40
6									
7									
8		Directly Assigned Distribution							
9	CLLI	1C	52C	3C	5C	45C	62C	35C	42C
48	WHWDSDCO	$45.78	$81.71	$7.19	$0.72	$1,183.53	$1.04	$149.96	$27.25
49	WRWKSDCO	$21.61	$41.52	$0.44	$2.61	$785.30	$7.86	$104.04	$18.60
50	WTTWSDCO	$20.32	$37.56	$1.90	$3.83	$638.58	$10.58	$91.10	$16.16
51	YNTNSDCO	$21.22	$39.96	$1.25	$2.69	$718.05	$7.10	$97.62	$17.31

South Dakota
Qwest Defaults 7/20/01 10:04:18 AM

CLLI	Number of Loops	Average Length	Percent DLC	Zone	Office Name
ABRDSDCO	21,206	13,730	24%	3	Aberdeen
ARTNSDCO	1,231	24,256	35%	3	Arlington
BLFRSDCO	3,934	14,128	13%	3	Belle Fourche
BLHKSDCE	3,735	41,275	95%	2	Blackhawk
CAVRSDCO	296	38,133	88%	3	Cavour
CHBLSDCO	2,349	11,230	23%	3	Chamberlain
CLMNSDCO	683	14,553	32%	3	Colman
CNTNSDCO	2,477	9,537	14%	3	Canton
DDWDSDCO	2,680	22,070	41%	3	Deadwood
DESMSDCO	1,189	15,324	20%	3	Desmet
ELPNSDCO	1,466	21,641	30%	3	Elk Point
FLNDSDCO	2,214	18,837	23%	3	Flandreau
FTPRSDCE	1,498	10,903	5%	3	Ft Pierre
HLCYSDCO	1,755	31,199	65%	3	Hill City
HRBGSDCO	1,009	27,357	94%	1	Harrisburg
HURNSDCO	9,839	11,202	14%	3	Huron
IRQSSDCO	381	26,660	51%	3	Iroquois
LEADSDCO	3,088	17,920	26%	3	Lead
LKPRSDCO	712	21,704	32%	3	Lake Preston
MCINSDCO	293	36,480	39%	3	Mcintosh
MDSNSDCE	4,891	10,195	15%	3	Madison
MLBNSDCO	3,647	14,767	21%	3	Milbank
MLLRSDCO	1,740	20,923	28%	3	Miller
MRTWSDCO	229	34,078	70%	3	Morristown
MTCHSDCO	10,858	10,431	10%	3	Mitchell
PIRRSDCO	13,380	14,021	36%	3	Pierre
RDFDSDCO	2,827	29,812	32%	3	Redfield
RPCYSDCO	47,779	16,201	51%	2	Rapid City
RPVYSDCO	3,295	12,542	16%	2	Rapid Valley
SPRFSDCO	7,936	11,648	15%	3	Spearfish
STRGSDCO	5,485	15,996	25%	3	Sturgis
SXFLSDCO	70,261	12,014	41%	1	Sioux Falls Main
SXFLSDSE	3,867	32,206	100%	1	Sioux Falls Southeast
SXFLSDSW	13,218	11,771	22%	1	Sioux Falls Southwest
TEA-SDCO	1,332	16,804	44%	1	Tea
TMLKSDCO	556	22,583	34%	3	Timber Lake
VOLGSDCO	1,298	25,985	39%	3	Volga
VRMLSDCO	8,788	8,086	6%	3	Vermillion

	A	R	S	T	U	V
1		South Dakota				
2		Qwest Defaults 7/20/01 10:04:18 AM				
3						
4						
5						
6						
7						
8						
9	CLLI	Number of Loops	Average Length	Percent DLC	Zone	Office Name
48	WHWDSDCO	647	22,601	50%	3	Whitewood
49	WRWKSDCO	4,104	18,783	83%	2	Warwick
50	WTTWSDCO	15,903	13,399	20%	3	Watertown
51	YNTNSDCO	11,736	13,409	15%	3	Yankton

Section A - Unbundled Loop
Loop Length Zone Data

South Dakota
Qwest Defaults 7/20/01 10:04:18 AM

	Directly Assigned Feeder								Directly Assigned Distribution								
Zone	1C	52C	4C	5C	45C	85C	257C	845C	1C	52C	3C	5C	45C	62C	35C	42C	Number of Loops
1	$0.00	$0.00	$0.00	$0.00	$0.00	$0.00	$0.00	$0.00	$0.00	$0.00	$0.00	$0.00	$0.00	$0.00	$0.00	$0.00	0
2	$0.00	$0.00	$0.00	$0.00	$0.00	$0.00	$0.00	$0.00	$0.00	$0.00	$0.00	$0.00	$0.00	$0.00	$0.00	$0.00	0
3	$0.00	$0.00	$0.00	$0.00	$0.00	$0.00	$0.00	$0.00	$0.00	$0.00	$0.00	$0.00	$0.00	$0.00	$0.00	$0.00	0
4	$0.00	$0.00	$0.00	$0.00	$0.00	$0.00	$0.00	$0.00	$0.00	$0.00	$0.00	$0.00	$0.00	$0.00	$0.00	$0.00	0
5	$0.00	$0.00	$0.00	$0.00	$0.00	$0.00	$0.00	$0.00	$0.00	$0.00	$0.00	$0.00	$0.00	$0.00	$0.00	$0.00	0
Avg	$0.00	$0.00	$0.00	$0.00	$0.00	$0.00	$0.00	$0.00	$0.00	$0.00	$0.00	$0.00	$0.00	$0.00	$0.00	$0.00	

Section B - Extension Technology
Ext Tech - Dev Total Prod Costs

Row	Qwest Defaults 7/20/01 10:04:18 AM South Dakota	Source or Calculation	Factor Value [AP p1 cB]	Extension Technology 2-Wire	Extension Technology Unbundled Loop Grooming 2-Wire
			A	B	B
1	**Investment**	sB p2 D28		191.04	92.18
2					
3	Investment Based Costs (IBC)	sB p2 J28		3.04	1.62
4	Element Specific Expenses	Billing		0.0165	0.0165
5	***Total IBC + Element Specific Expenses***	*r3 + r4*		3.06	1.64
6					
7	***Directly Assigned***				
8	Product Management Expense	cA*r5	0.02557	0.0782	0.0419
9	Sales Expense	cA*r5	0.00922	0.0282	0.0151
10	Product Advertising Expense	cA*r5	0.00000	0.0000	0.0000
11	Business Fees (Other Operating Taxes)	cA*(r5+r8:r10)	0.00203	0.0064	0.0034
12	***Directly Assigned Costs***	*Sum r8:r11*		0.1128	0.0604
13					
14	***Total Direct***	*r5 + r12*		3.17	1.70
15					
16	***Directly Attributed***				
17	Network Operations	cA*r14	0.04088	0.1296	0.0694
18	Network Support Assets	cA*r14	0.01536	0.0487	0.0261
19	General Support Assets	cA*r14	0.06951	0.2204	0.1180
20	General Purpose Computers	cA*r14	0.03471	0.1101	0.0589
21	Uncollectible - Interconnect	cA*r14	0.00040	0.0013	0.0007
22	Accounting and Finance Expense	cA*r14	0.00884	0.0280	0.0150
23	Human Resources Expense	cA*r14	0.00814	0.0258	0.0138
24	Information Management Expense	cA*r14	0.05701	0.1808	0.0968
25	Intangibles	cA*r14	0.00209	0.0066	0.0036
26	***Total Directly Attributed Costs***	*Sum r17:r25*		0.7515	0.4024
27					
28	***Total Element Long Run Incremental Costs***	*r 14 + r26*		3.92	2.10
29					
30	***Common***				
31	Executive Expense	cA*r28	0.00780	0.030618126	0.016394275
32	Planning Expense	cA*r28	0.00058	0.002275795	0.00121856
33	External Relations Expense	cA*r28	0.01303	0.051111947	0.027367557
34	Legal Expense	cA*r28	0.00615	0.024119464	0.012914609
35	Other Procurement Expense	cA*r28	0.00236	0.009255414	0.00495575
36	Research and Development Expense	cA*r28	0.00004	0.000141277	7.56457E-05
37	Other General and Admin Exp	cA*r28	0.01521	0.05967432	0.031952223
38	***Total Common Costs***	*Sum r31:r37*		0.1772	0.0949
39					
40	***TELRIC + Common***	*r27 + r38*		**4.10**	**2.20**

c = column, r = row, s = section, p = page, AP = Appendix

	A	B	C	D	E	F	G	H	I	J
1	Qwest Defaults 7/20/01 10:04:18 AM									
2	South Dakota					**Extension Technology**				
3	**Acct**	**FRC**	**Account Name**	**Investment**	**Depreciation**	**Cost of Money**	**Income Tax**	**Ad Valorem**	**Maintenance**	**Total Capital Costs**
4	**Unbundled Loop (2 wire)**				cD*(AP p7 cA)/12	cD*(AP p7 cB)/12	cD*(AP p7 cC)/12	cD*(AP p7 cD)/12	cD*(AP p7 cE)/12	sum(cE:cI)
5	2111	20C	Land	0.25	0.0000000	0.0020388	0.0007710	0.0001820	0.0004722	0.0034641
6	2121	110C	Building	9.71	0.0208849	0.0605570	0.0229005	0.0069663	0.0180804	0.1293891
7	2232.2	257C	Pair Gain—Digital	181.08	1.6556677	0.6859226	0.2593910	0.1299682	0.1783705	2.9093200
8	2411	1C	Poles	0.00	0.0000000	0.0000000	0.0000000	0.0000000	0.0000000	0.0000000
9	2421.11,.21	52C	Aerial Cbl Metallic	0.00	0.0000000	0.0000000	0.0000000	0.0000000	0.0000000	0.0000000
10	2421.11	42C	Aerial Drop	0.00	0.0000000	0.0000000	0.0000000	0.0000000	0.0000000	0.0000000
11	2422.11,.21	5C	UG Cbl Metallic	0.00	0.0000000	0.0000000	0.0000000	0.0000000	0.0000000	0.0000000
12	2422.12,.22	85C	UG Cbl Nonmetallic	0.00	0.0000000	0.0000000	0.0000000	0.0000000	0.0000000	0.0000000
13	2423.11,.21	45C	Buried Cbl Metallic	0.00	0.0000000	0.0000000	0.0000000	0.0000000	0.0000000	0.0000000
14	2423.11	35C	Buried Drop	0.00	0.0000000	0.0000000	0.0000000	0.0000000	0.0000000	0.0000000
15	2423.12,.22	845C	Buried Cbl Nonmetallic	0.00	0.0000000	0.0000000	0.0000000	0.0000000	0.0000000	0.0000000
16	2426.1	62C	Intrabuilding Cbl., Exch., Metallic	0.00	0.0000000	0.0000000	0.0000000	0.0000000	0.0000000	0.0000000
17	2426.2	862C	Intrabuilding Cbl., Exch., Nonmetallic	0.00	0.0000000	0.0000000	0.0000000	0.0000000	0.0000000	0.0000000
18	2431	3C	Aerial Wire	0.00	0.0000000	0.0000000	0.0000000	0.0000000	0.0000000	0.0000000
19	2441	4C	Conduit System	0.00	0.0000000	0.0000000	0.0000000	0.0000000	0.0000000	0.0000000
20			**Total**	**191.04**	**1.68**	**0.75**	**0.28**	**0.14**	**0.20**	**$ 3.04**
21										
22	**Unbundled Loop Grooming**									
23	2111	20C	Land	0.12	0.0000000	0.0009837	0.0003720	0.0000878	0.0002279	0.0016713
24	2121	110C	Building	4.68	0.0100766	0.0292177	0.0110491	0.0033611	0.0087235	0.0624280
25	2232.3	357C	Other Digital Equipment	87.37	0.7988309	0.3309457	0.1251516	0.0627074	0.2395260	1.5571617
26			**Total**	**92.18**	**0.81**	**0.36**	**0.14**	**0.07**	**0.25**	**$ 1.62**
27	**Billing**									
28	2124	361C	General Purpose Comp. (Billing)	**0.0001123**	**0.0000015**	**0.0000004**	**0.0000002**	**0.0000001**	**0.0000000**	**0.0000022**
29										
30	**Total 2-wire Ext. Tech. With Grooming**			**283.22**	**2.49**	**1.11**	**0.42**	**0.20**	**0.45**	**4.66**
31	**Investment Sources**									
32	Land= (AP p12 D10) * 377C + (AP p12 E10) * (57C+257C+357C+357CS)						Building = (AP p12 B10) * 377C + (AP p12 C10) * (57C+257C+357C+357CS)			
33	Unbundled Loop = sB p4 cE						Unbundled Loop Grooming = sB p7 H33			

	A	B	C	D	E	F	G	H
1	**Unbundled Loop Grooming Design POTS**							
2								
3						**State Name**	South Dakota	
4	**State:**	**South Dako**	2-WIRE					**Weighted**
5			**Investment**		**DLC %**			**Investment**
6	**Option 1**	UDLC	$149.0212	257C	0.2595		C6*E6	$38.6699
7								
8								
9								
10	**Option 2**	UDLC	$585.6415	257C	0.0429		C10*E10	$25.1268
11								
12								
13								
14	**Weighted average demultiplexing investment per DS0 for POTS**						H6+H10	$63.7968
15								
16	**Unbundled Loop Grooming Design BRI ISDN**							
17								
18	**State:**	**South Dako**	2-WIRE					**Weighted**
19			**Investment**		**DLC %**			**Investment**
20	**Option 1**	UDLC	$91.3230	257C	0.2595		C20*E20	$23.6977
21								
22								
23								
24	**Option 2**	UDLC	$622.1016	257C	0.0429		C24*E24	$26.6912
25								
26								
27								
28	**Weighted average demultiplexing investment per DS0 for BRI ISDN**						H20+H24	$50.3888
29								
30	**Incremental additional Investment per DS0 between POTS and BRI ISDN 1st Channel**						H28-H14	($13.4080)
31	**Incremental Investment per DS0 BRI ISDN for 2 Additional Channels**						2*H28	$100.7776
32								
33	**Incremental additional Investment for DS0s for BRI ISDN Total for 3 Channels**						H30+H31	$87.3697
44								
45	**South Dakota**		**Unbundled Loop Grooming - for use with integrated TR-303 DS1s**					
46	2-WIRE POTS							
47	**Parts**				**Quantity**	**Unit Investment**		**Total Investment**
48	**Hardware & Commons for COT TR-008**					sA - Loop Grooming data		
49	COT 7' Bay Copper Fed				1	$12,040.5810	E49*F49	$12,040.5810
50	COT Common Plugs Copper Fed (TR-008)				1	$11,710.8929	E50*F50	$11,710.8929
51	COT Channel Bank Common PIE				3	$1,567.3785	E51*F51	$4,702.1355
52	CPOTS Channel Units (Quad Cards)				168	$285.1926	E52*F52	$47,912.3617
53				Total			SUM(H49:H52)	$76,365.9711
54	**Software & Hardware Option**							
55	TR-303 Generic System Software				1			
56	OMAPS				1			
57								
58				Total cost	System		H49+H50+H51	$28,453.6094
59					Channel Units		H52	$47,912.3617
60								
61	System Fill		0.65	At fill	System		H58/C61	$43,774.7837
62	Channel Unit Fill		0.85		Channel Units		H59/C62	$56,367.4844
63					Total		H61+H62	$100,142.2681
64								
65				System Capacity (DS0s)			[=4*E52]	672
66				Cost per DS0			[=H63/H65]	$149.0212
67								
68	System used to demuliplex DS0s from integrated TR-303 DS1s							
69								

	A	B	C	D	E	F	G	H
70	**South Dakota**		**Unbundled Loop Grooming - for use with integrated TR-008 DS1s**					
71	2-WIRE POTS							
72	**Parts**				**Quantity**	**Unit Investment**		**Total Investment**
73	**Hardware & Commons for COT TR-008**					sA - Loop Grooming data		
74	COT 7' Bay Copper Fed				1	$12,040.5810	E74*F74	$12,040.5810
75	COT Common Plugs Copper Fed (TR-008)				1	$11,710.8929	E75*F75	$11,710.8929
76	COT Channel Bank Common PIE				3	$1,567.3785	E76*F76	$4,702.1355
77	DS1 Channel Units				56	$415.7353	E77*F77	$23,281.1776
78	CPOTS Channel Units (Quad Cards)				26	$285.1926	E78*F78	$7,415.0084
79				Total			SUM(H74:H78)	$59,149.7953
80	**Software & Hardware Option**							
81	TR-303 Generic System Software				1			
82	OMAPS				1			
83								
84	System capacity		672		Total cost	System	H74+H75+H76	$28,453.6094
85	Unbundled loop %		0.15			Channel Units	H77+H78	$30,696.1859
86	Unbundled loops		101			Total		$59,149.7953
87	POTS channel units		26					
88								
89				Working DS0s			[=C42]	101
90				Cost per DS0			[=H42/H45]	$585.6415
91								
92	System used to demuliplex DS0s from integrated TR-008 DS1s							
93								
94	**South Dakota**		**Unbundled Loop Grooming - for use with integrated TR-303 DS1s**					
95	2-WIRE BRI ISDN							
96	**Parts**				**Quantity**	**Unit Investment**		**Total Investment**
97	**Hardware & Commons for COT TR-008**					sA - Loop Grooming data		
98	COT 7' Bay Copper Fed				1	$12,040.5810	E98*F98	$12,040.5810
99	COT Common Plugs Copper Fed (TR-008)				1	$11,710.8929	E99*F99	$11,710.8929
100	COT Channel Bank Common PIE				3	$1,567.3785	E100*F100	$4,702.1355
101	CISDN Channel Units (Quad Cards)				90	$285.1926	E101*F101	$25,667.3366
102				Total			SUM(H98:H101)	$54,120.9460
103	**Software & Hardware Option**							
104	TR-303 Generic System Software				1			
105	OMAPS				1			
106								
107				Total cost	System		H98+H99+H100	$28,453.6094
108					Channel Units		H101	$25,667.3366
109								
110	System Fill		0.65	At fill	System		H107/C110	$43,774.7837
111	Channel Unit Fill		0.85		Channel Units		H108/C111	$30,196.8666
112					Total		H110+H111	$73,971.6503
113								
114	TR-303 uses 2.25 time slots for BRI ISDN			System Capacity (DS0s)			[=(4*E101)*2.25]	810
115				Cost per DS0			[=H112/H114]	$91.3230
116	System used to demuliplex DS0s from integrated TR-303 DS1s							
117								
118	**South Dakota**		**Unbundled Loop Grooming - for use with integrated TR-008 DS1s**					
119	2-WIRE BRI ISDN							
120	**Parts**				**Quantity**	**Unit Investment**		**Total Investment**
121	**Hardware & Commons for COT TR-008**							
122	COT 7' Bay Copper Fed				1	$12,040.5810	E122*F122	$12,040.5810
123	COT Common Plugs Copper Fed (TR-008)				1	$11,710.8929	E123*F123	$11,710.8929
124	COT Channel Bank Common PIE				3	$1,567.3785	E124*F124	$4,702.1355
125	DS1 Channel Units				56	$415.7353	E125*F125	$23,281.1776
126	CISDN Channel Units (Quad Cards)				57	$860.4503	E126*F126	$49,045.6690
127				Total			SUM(H122:H126)	$100,780.4560
128	**Software & Hardware Option**							

	A	B	C	D	E	F	G	H
129	TR-303 Generic System Software				1			
130	OMAPS				1			
131								
132	System Capacity, BRI Lines		360	[=(30*3)*4]	Total cost	System	122+H123+H124	$28,453.6094
133	Unbundled loop %		0.15			Channel Units	H125+H126	$72,326.8466
134	Unbundled loops		54			Total	H125+H126	$100,780.4560
135	ISDN Quad channel units		57					
136								
137	TR-008 uses 3 time slots for BRI ISDN			Working DS0s			[=C134*3]	162
138				Cost per DS0			[=H134/H137]	$622.1016
139								
140	System used to demuliplex DS0s from integrated TR-008 DS1s							

Section B - Extension Technology
ET Grooming - Inv Development

Cell: G114
Comment: the calculation represents the following:
30 BRI Quad cards times 3 channel banks times 4 bri lines per quad card times 2.25. Gives total DS0 time slot capacity. Per Peggy Speight 7/22/97.

L Stolper

Cell: D132
Comment: the calculation represents the following:
30 BRI Quad cards times 3 channel banks times 4 bri lines per quad card.
Per Peggy Speight 7/22/97.

L Stolper

Section A - Unbundled Loop
Loop Module ET Outputs

	A	B	C	D	E
1	Qwest Defaults 7/20/01 10:04:18 AM				
2	South Dakota				
3			Extension Technology Calculation		
4	FRC	Description	POTS	ISDN	Extention Technology (ISDN - POTS)
5	1C	Poles	$0.00	$0.00	$0.00
6	52C	Aerial Cable	$0.00	$0.00	$0.00
7	3C	C Wire	$0.00	$0.00	$0.00
8	4C	Conduit	$13.61	$13.61	$0.00
9	5C	Underground Cable	$0.00	$0.00	$0.00
10	45C	Buried Cable	$0.00	$0.00	$0.00
11	62C	Building Cable	$0.00	$0.00	$0.00
12	85C	Underground Fiber	$9.50	$9.50	$0.00
13	257C	Pair Gain	$358.73	$539.81	$181.08
14	845C	Buried Fiber	$328.79	$328.79	$0.00
15	862C	Building Fiber	$0.00	$0.00	$0.00
16	35C	Buried Drop	$0.00	$0.00	$0.00
17	42C	Aerial Drop	$0.00	$0.00	$0.00
18		Total Investment	$710.62	$891.71	$181.08
19					
20					
21	Investments are Outputs from the Loop Module				

Section C - Line and Trunk Ports
Port- Develop Total Prod Costs

Row	Qwest Defaults 7/20/01 10:04:18 AM South Dakota	Line Ports Source or Calculation	Factor Value [AP p1 cB]	Line and Trunk Ports DS0 Analog Line Port	DS0 Trunk Port	DS1 Trunk Port	ISDN BRI Port	ISDN PRI Port	DID/PBX Trunk Port
			A	B	C	D	E	F	G
1	**Investment**	sC p2-3 cD Total	sC p2-3 cD	55.23	842.29	3598.38	644.81	10131.39	187.21
2									
3	Investment Based Costs (IBC)	sC p2-3 cK Total	sC p2-3 cJ	0.9157435	13.96451324	59.65805369	10.15703641	167.96998371	3.10326698
4	Element Specific Expenses	sC p4	sC p4-5	0.0164665	0.01646653	0.01646653	1.62250599	0.17936653	0.01646653
5	***Total IBC + Element Specific Expenses***	*r3 + r4*		0.9322100	13.9809798	59.6745202	11.7795424	168.1493502	3.1197335
6									
7	***Directly Assigned***								
8	Product Management Expense	cA*r5	0.02557	0.0238321	0.3574267	1.5255919	0.3011465	4.2987741	0.0797567
9	Sales Expense	cA*r5	0.00922	0.0085992	0.1289687	0.5504724	0.1086613	1.5511072	0.0287782
10	Product Advertising Expense	cA*r5	0.00000	0.0000000	0.0000000	0.0000000	0.0000000	0.0000000	0.0000000
11	Business Fees (Other Operating Taxes)	cA*(r5+r8:r10)	0.00203	0.0019535	0.0292984	0.1250532	0.0246851	0.3523716	0.0065377
12	***Directly Assigned Costs***	*Sum r8:r11*		0.0343849	0.5156938	2.2011174	0.4344929	6.2022529	0.1150726
13									
14	***Total Direct***	*r5 + r12*		0.9665950	14.4966735	61.8756376	12.2140353	174.3516031	3.2348061
15									
16	***Directly Attributed***								
17	Network Operations	cA*r14	0.04088	0.0395145	0.5926256	2.5294827	0.4993111	7.1275121	0.1322392
18	Network Support Assets	cA*r14	0.01536	0.0148507	0.2227266	0.9506559	0.1876562	2.6787341	0.0496995
19	General Support Assets	cA*r14	0.06951	0.0671857	1.0076293	4.3008284	0.8489685	12.1187653	0.2248437
20	General Purpose Computers	cA*r14	0.03471	0.0335543	0.5032364	2.1479461	0.4239971	6.0524280	0.1122928
21	Uncollectible - Interconnect	cA*r14	0.00040	0.0003874	0.0058108	0.0248019	0.0048958	0.0698861	0.0012966
22	Accounting and Finance Expense	cA*r14	0.00884	0.0085435	0.1281326	0.5469040	0.1079569	1.5410522	0.0285917
23	Human Resources Expense	cA*r14	0.00814	0.0078726	0.1180707	0.5039571	0.0994794	1.4200375	0.0263465
24	Information Management Expense	cA*r14	0.05701	0.0551050	0.8264472	3.5274954	0.6963153	9.9396870	0.1844145
25	Intangibles	cA*r14	0.00209	0.0020213	0.0303148	0.1293915	0.0255414	0.3645961	0.0067645
26	***Total Directly Attributed Costs***	*Sum r17:r25*		0.2290352	3.4349939	14.6614629	2.8941217	41.3126984	0.7664889
27									
28	***Total Element Long Run Incremental Costs***	*r14 + r26*		1.1956301	17.9316675	76.5371005	15.1081570	215.6643015	4.0012950
29									
30	***Common***								
31	Executive Expense	cA*r28	0.00780	0.0093318	0.1399547	0.5973638	0.1179175	1.6832366	0.0312297
32	Planning Expense	cA*r28	0.00058	0.0006936	0.0104026	0.0444011	0.0087646	0.1251122	0.0023213
33	External Relations Expense	cA*r28	0.01303	0.0155779	0.2336315	0.9972010	0.1968440	2.8098878	0.0521328
34	Legal Expense	cA*r28	0.00615	0.0073511	0.1102495	0.4705740	0.0928897	1.3259716	0.0246012
35	Other Procurement Expense	cA*r28	0.00236	0.0028209	0.0423063	0.1805744	0.0356448	0.5088179	0.0094403
36	Research and Development Expense	cA*r28	0.00004	0.0000431	0.0006458	0.0027563	0.0005441	0.0077667	0.0001441
37	Other General and Admin Exp	cA*r28	0.01521	0.0181875	0.2727699	1.1642541	0.2298197	3.2806057	0.0608662
38	***Total Common Costs***	*Sum r31:r37*		0.0540057	0.8099603	3.4571248	0.6824244	9.7413986	0.1807356
39									
40	***TELRIC + Common***	*r27 + r38*		1.2496	18.7416	79.9942	15.7906	225.4057	4.1820

c = column, r = row, s = section, p = page, AP = Appendix

Section C - Line and Trunk Ports
Port-Investment Cost Calc

	A	B	C	D	E	F	G	H	I	J	K
1	Qwest Defaults 7/20/01 10:04:18 AM						Line and Trunk Ports				
2	South Dakota			Investment	Depreciation	Cost of Money	Income Tax	Ad Valorem	Maintenance	Digital Electronic Expense - RTU 377C	Total Capital Costs
3	Acct	FRC	Account Name		cD*(AP p7 cA)	cD*(AP p7 cB)	cD*(AP p7 cC)	cD*(AP p7 cD)	cD*(AP p7 cE)	cD*(AP p1 B5)	sum(cE:cJ)
4	DS0 Analog Line Port										
5	2111	20C	Land	0.0732900	0.0000000	0.0005894	0.0002229	0.0000526	0.0001365		0.0010014
6	2121	110C	Building	2.8111950	0.0060490	0.0175393	0.0066327	0.0020177	0.0052367		0.0374753
7	2124	361C	General Purpose Comp.	0.000112344	0.0000015	0.0000004	0.0000002	0.0000001	0.0000000		0.000002238
8	2212	377C	Digital Switch	52.3500000	0.4751211	0.1982528	0.0749720	0.0375729	0.0913457	0.0000000	0.8772646
9			Total	55.2345973	0.4811716	0.2163820	0.0818278	0.0396432	0.0967189	0.0000000	0.9157435
10	DS0 Trunk Port										
11	2111	20C	Land	1.117629005	0.0000000	0.0089882	0.0033990	0.0008022	0.0020819		0.015271273
12	2121	110C	Building	42.869055406	0.0922430	0.2674635	0.1011450	0.0307682	0.0798560		0.571475601
13	2212	377C	Digital Switch	798.31	7.2453144	3.0232382	1.1432789	0.5729644	1.3929683	0.0000000	13.3778
14	2124	361C	General Purpose Comp.	0.000112344	0.0000015	0.0000004	0.0000002	0.0000001	0.0000000		0.000002238
15			Total	842.29	7.3375589	3.2996903	1.2478230	0.6045348	1.4749062	0.0000000	13.9645
16	DS1 Trunk Port										
17	2111	20C	Land	4.774644000	0.0000000	0.0383987	0.0145210	0.0034269	0.0088942		0.065240694
18	2121	110C	Building	183.141702000	0.3940730	1.1426358	0.4321034	0.1314454	0.3411542		2.441411720
19	2212	377C	Digital Switch	3410.46	30.9528445	12.9156330	4.8842232	2.4477720	5.9509263	0.0000000	57.1514
20	2124	361C	General Purpose Comp.	0.000112344	0.0000015	0.0000004	0.0000002	0.0000001	0.0000000		0.000002238
21			Total	3598.38	31.3469190	14.0966680	5.3308477	2.5826443	6.3009747	0.0000000	59.6581
22	ISDN BRI Port										
23	2111	20C	Land	0.678909550	0.0000000	0.0054599	0.0020647	0.0004873	0.0012647		0.009276614
24	2121	110C	Building	26.034622304	0.0560197	0.1624321	0.0614259	0.0186857	0.0484970		0.347060398
25	2212	377C	Digital Switch	420.852597004	3.8195976	1.5937961	0.6027158	0.3020564	0.7343475	0.0000000	7.052513358
26	2232.3	357C	Other Digital Equipment	19.949052950	0.1823965	0.0755646	0.0285758	0.0143179	0.0546908		0.355545536
27	2232.3	357CS	Other Digital Equipment	44.133742668	0.4035198	0.1671732	0.0632188	0.0316759	0.1195220		0.785109774
28	2422.12,.22	85C	UG Cbl Nonmetallic	65.314236296	0.3850374	0.3078339	0.1164116	0.0468777	0.0386300		0.894790517
29	2423.12,.22	845C	Buried Cbl Nonmetallic	2.768676391	0.0140516	0.0131649	0.0049785	0.0019871	0.0025986		0.036780795
30	2124	361C	General Purpose Comp.	0.000112344	0.0000015	0.0000004	0.0000002	0.0000001	0.0000000		0.000002238
31	2441	4C	Conduit System	65.077518200	0.1162882	0.3503347	0.1324839	0.0467078	0.0301426		0.675957182
32			Total	644.809467706	4.9769123	2.6757599	1.0118752	0.4627958	1.0296932	0.0000000	10.157036412
33	ISDN PRI Port										
34	2111	20C	Land	13.443229282	0.0000000	0.1081132	0.0408845	0.0096485	0.0250419		0.183688167
35	2121	110C	Building	515.643866031	1.1095305	3.2171436	1.2166068	0.3700904	0.9605354		6.873906730
36	2212	377C	Digital Switch	9602.31	87.1491539	36.3645575	13.7517545	6.8918144	16.7551062	0.0000000	160.9124
37	2124	361C	General Purpose Comp.	0.000112344	0.0000015	0.0000004	0.0000002	0.0000001	0.0000000		0.000002238
38			Total	10131.39	88.2586860	39.6898147	15.0092460	7.2715535	17.7406835	0.0000000	167.9700

Section C - Line and Trunk Ports
Port-Investment Cost Calc

	A	B	C	D	E	F	G	H	I	J	K
1	Qwest Defaults 7/20/01 10:04:18 AM						Line and Trunk Ports				
2	South Dakota			Investment	Depreciation	Cost of Money	Income Tax	Ad Valorem	Maintenance	Digital Electronic Expense - RTU 377C	Total Capital Costs
3	Acct	FRC	Account Name		cD*(AP p7 cA)	cD*(AP p7 cB)	cD*(AP p7 cC)	cD*(AP p7 cD)	cD*(AP p7 cE)	cD*(AP p1 B5)	sum(cE:cJ)
39	DID/PBX Trunk Port										
40	2111	20C	Land	0.248408824	0.0000000	0.0019978	0.0007555	0.0001783	0.0004627		0.003394256
41	2121	110C	Building	9.528174089	0.0205021	0.0594470	0.0224807	0.0068386	0.0177490		0.127017471
42		257C	Pair Gain—Digital	0.79	0.0071917	0.0029794	0.0011267	0.0005645	0.0007748	0.0000000	0.0126
43	2212	377C	Digital Switch	176.65	1.6032346	0.6689786	0.2529834	0.1267849	0.3082344	0.0000000	2.9602
44	2124	361C	General Purpose Comp.	0.000112344	0.0000015	0.0000004	0.0000002	0.0000001	0.0000000		0.000002238
45			Total	187.21	1.6309300	0.7334033	0.2773465	0.1343664	0.3272209	0.0000000	3.1033
46	Investment Sources										
47	Land= (AP p12 D10) * 377C + (AP p12 E10) * (57C+257C+357C+357CS)						Building = (AP p12 B10) * 377C + (AP p12 C10) * (57C+257C+357C+357CS)				
48	All others = sC p4 sum of column c, f, or g by account										
49											
50	s = section										
51	p = page										
52	c = column										
53	r = row										
54	Upper Case letter with number indicates a cell location, i.e. G40										

	A	B	C	D	E	F	G	H	I
1	**Qwest Defaults 7/20/01 10:04:18 AM**								
2					**South Dakota**				
3					**Investment & Expense Summary**				
4									
5	**DS0 Analog Line Port**								
6			*a*	*b*	*c*				
7	**Account Name**	**FRC**	**DS1 Port Switching**	**B&C**	**TOTAL**				
8			sC p14 E3	*AP p10 F21&22*	*a+b*				
9	General Purpose Comp.	361C		0.000112344	0.000112344				
10	Digital Switch	377C	52.35		52.35				
11		Expense		0.016466529	0.016466529				
12									
13	**DS0 Analog Trunk Port**								
14			*a*	*b*	*c*				
15	**Account Name**	**FRC**	**DS1 Port Switching**	**B&C**	**TOTAL**				
16			sC p14 r7	*AP p10 F21&22*	*a+b*				
17	General Purpose Comp.	361C		0.000112344	0.000112344				
18	Digital Switch	377C	798.3064321		798.3064321				
19		Expense		0.016466529	0.016466529				
20									
21	**DS1 Trunk Port**								
22			*a*	*b*	*c*				
23	**Account Name**	**FRC**	**DS1 Port Switching**	**B&C**	**TOTAL**				
24			sC p14 E5	*AP p10 F21&22*	*a+b*				
25	General Purpose Comp.	361C		0.000112344	0.000112344				
26	Digital Switch	377C	3410.46		3410.46				
27		Expense		0.016466529	0.016466529				
28									

Section C - Line and Trunk Ports
Ports Inv & Exp Summary

	A	B	C	D	E	F	G	H	I
29	**ISDN BRI Port**								
30			*a*	*b*	*c*	*d*	*e*	*f*	
31	**Account Name**	**FRC**	**RTU**	**X.75 Link**	**BRI Port Switching**	**Switching Features**	**Billing & Collections**	**Total**	
32	*Investment*			*sC p11 r52*	*sC p14 E9*	*sC p14 E16*	*AP p10 F21*	*a+b+c+d+e*	
33	*Expense*		*sC p6 D25*			*D63*	*AP p10 F22*		
34	General Purpose Comp.	361C					$ 0.0001	$ 0.0001	
35	Other Digital Equipment	357C		$ 19.9491				$ 19.9491	
36	Other Digital Equipment	357CS		$ 44.1337				$ 44.1337	
37	Digital Switch	377C		$ 159.2480	$ 235.4174	$ 26.1872		$ 420.8526	
38	Conduit System	4C		$ 65.0775				$ 65.0775	
39	Buried Cbl Nonmetallic	845C		$ 2.7687				$ 2.7687	
40	UG Cbl Nonmetallic	85C		$ 65.3142				$ 65.3142	
41		Expense	$ 1.5517			$ 0.0543	$ 0.0165	$ 1.6225	
42									
43	**ISDN PRI Port**								
44			*a*	*b*	*c*	*d*	*e*	*f*	
45	**Account Name**	**FRC**	**23B+D**	**DID**	**DOD**	**RTU**	**B&C**	**TOTAL**	
46	*Investment*		*sC p14 E25*	*sC p14 E20*	*sC p14 E21*		*AP p10 F21*	*a+b+c+d+e*	
47	*Expense*		*D63*	*D63*	*D63*	*sC p6 D35*	*AP p10 F22*		
48	General Purpose Comp.	361C					$ 0.000112	$ 0.0001	
49	Digital Switch	377C	$ 9,448.62	$ 76.84	$ 76.84			$ 9,602.31	
50		Expense	$ 0.0543	$ 0.0543	$ 0.0543	$ -	$ 0.0165	$ 0.1794	
51									
52	**DID/PBX Trunk Port**								
53			*a*	*b*	*c*	*d*	*e*	*f*	*g*
54	**Account Name**	**FRC**	**DS1 to DS0 Multiplexer**	**MDF**	**DSX-1**	**DLTU**	**Switch Processing for DID Function**	**Billing**	**Total per Termination**
55	*Investment*		*sC p13 ln5*	*sC p13 ln8*	*sC p13 ln11*	*sC p14 E30*	*sC p14 E31*	*AP p10 F21*	*a+b+c+d+e+f*
56	*Expense*							*AP p10 F22*	
57	Pair Gain—Digital	257C	$ 0.79						**$ 0.79**
58	Digital Switch	377C		$ 0.05	$ 0.72895	$ 153.13	$ 22.74		**$ 176.65**
59	General Purpose Comp.	361C						$ 0.000112	**$ 0.000112**
60		Expenses						$ 0.0165	**$ 0.0165**
61									
62									

Section C - Line and Trunk Ports
Ports Inv & Exp Summary

	A	B	C	D	E	F	G	H	I
63	**Feature RTU**	Expense per feature		$ 0.0543					

	A	B	C	D
1				
2		**Single Line ISDN Service**		
3		**South Dakota**		
4	Qwest Defaults 7/20/01 10:04:18 AM			
5				
6	**BRI RTU FEES**			
7				
8				
9		**SW 1**		
10	1.	SW 1 Buy Out RTU to Qwest	*Capital Lease Expense / Port*	$ -
11	2.	South Dakota SW 1 ISDN Lines	*sC p7 I63*	787
12	3.	South Dakota Total ISDN Lines	*Ln2 + Ln9*	787
13	4.	Total ISDN Lines	*sC p7 H65*	141,277
14	5.	SW 1 Buy Out RTU per Line	*(Ln1 x (Ln3 / Ln4)) / Ln2*	$ -
15	6.	SW 1 RTU per Line	*sC p15 cE*	$ 100.00
16	7.	Total SW 1 ISDN RTU per Line	*Ln5 + Ln6*	$ 100.00
17				
18				
19		**SW 2**		
20	8	SW 2 Expense RTU per ISDN Line	*sC p15 cE*	$ 150.00
21	9	South Dakota SW 2 ISDN Lines	*sC p7 J63*	-
22				
23		**Weighted Average RTU Expense**		
24	10	Weighted ISDN RTU per Line	*(Ln7*(Ln2/Ln3))+(Ln8*(Ln9/Ln3))*	$ 100.00
25	11	Levelized Monthly RTU expense per Line	*A/P using Ln 10*	$1.55
26				
27				
28	**PRI RTU FEES**			
29				
30	1.	Switch Type 1 RTU to USWC	*Total Captital Lease Expense*	$ -
31	2.	Total ISDN Lines	*sC p7 H65*	141,277
32	3.	RTU per ISDN Line	*Ln1 / Ln2*	$ -
33				
34	4.	Levelized Annual RTU expense per line	A/P using Ln 3	$0.00
35	5.	Levelized Monthly RTU expense per line	*Ln 4 / 12 months*	$0.00
36				
37				
38		*Pretax Discount Rate*	AP p8	13.98%
39		*Period (years)*	*sC p15 cE*	10.0
40				
41				
42				
43				
44				
45				
46				
47				
48				

	A	B	C	D	E	F	G	H	I	J
1	**Qwest Defaults 7/20/01 10:04:18 AM**									
2			**ISDN LINES NETWORK DISCLOSED OFFICES ONLY**							
3			ANNUAL GAIN							
4	**South Dakota**									
5		**Switch Type**	**2000**	**2001**	**2002**	**2003**		**NPV**	**SW1 Lines**	**SW2 Lines**
6								NPV (2003 to 2001 @ Discount Rate) + Prior years		
7	ABERDEEN	1	167	19	15	21		212	212	0
8	ARLINGTON	EIA	0	0	0	0		-	0	0
9	BELLE-FOURCHE	EIA	0	0	0	0		-	0	0
10	BLACKHAWK	EIA	0	0	0	0		-	0	0
11	CANTON	EIA	0	0	0	0		-	0	0
12	CAVOUR	EIA	0	0	0	0		-	0	0
13	CHAMBERLAIN	EIA	0	0	0	0		-	0	0
14	COLMAN	EIA	0	0	0	0		-	0	0
15	DEADWOOD	EIA	0	0	0	0		-	0	0
16	DESMET	EIA	0	0	0	0		-	0	0
17	ELK-POINT	EIA	0	0	0	0		-	0	0
18	FLANDREAU	EIA	0	0	0	0		-	0	0
19	FORT-PIERRE	EIA	0	0	0	0		-	0	0
20	HARRISBURG	EIA	0	0	0	0		-	0	0
21	HILL-CITY	EIA	0	0	0	0		-	0	0
22	HURON	1	51	2	-15	-6		36	36	0
23	IROQUOIS	EIA	0	0	0	0		-	0	0
24	LAKE-PRESTON	EIA	0	0	0	0		-	0	0
25	LEAD	EIA	0	0	0	0		-	0	0
26	MADISON	1	0	0	0	0		-	0	0
27	MILBANK	EIA	0	0	0	0		-	0	0
28	MILLER	EIA	0	0	0	0		-	0	0
29	MITCHELL	1	0	0	0	0		-	0	0
30	PIERRE	1	18	-5	18	5		32	32	0
31	RAPID-CITY	1	178	18	22	22		229	229	0
32	RAPID-VALLEY	EIA	0	0	0	0		-	0	0
33	REDFIELD	1	0	0	0	0		-	0	0
34	SIOUX-FALLS-MN	1	158	14	7	5		180	180	0
35	SIOUX-FALLS-SE	EIA	0	0	0	1		1	0	0
36	SIOUX-FALLS-SW	EIA	0	0	0	0		-	0	0
37	SISSETON	EIA	0	0	0	0		-	0	0
38	SPEARFISH	1	14	-1	1	0		14	14	0
39	STURGIS	EIA	0	0	0	0		-	0	0
40	TEA	EIA	0	0	0	0		-	0	0
41	VERMILLION	1	27	0	-1	0		26	26	0
42	VOLGA	EIA	0	0	0	0		-	0	0
43	WARWICK	EIA	0	0	0	0		-	0	0
44	WATERTOWN	1	30	0	2	1		32	32	0
45	WHITEWOOD	EIA	0	0	0	0		-	0	0
46	YANKTON	1	21	3	1	1		25	25	0
47	**South Dakota Totals**		664	50	50	50		788	787	-
48										
49	**Qwest**									
50	**CTX-21 ISDN**		120	51	54	33		235		
51	**CTX PRIME ISDN**		2320	1172	1045	1045		5028		
52	**ISDN BASIC**		29261	803	733	737		31146		
53	**ISDN - SLS**		68235	12792	12455	10912		98283		
54	**CONSUMER ISDN**		6257	2220	1531	-3942		6584		
55	**Qwest Totals**		106,194	17,037	15,818	8,785		141,277		
56										
57	Discount Rate =	0.1014								

Section C - Line and Trunk Ports
ISDN X.75 Link Investment Dev

Qwest Defaults 7/20/01 10:04:18 AM

South Dakota

X.75 LINK

INPUTS

1.	Investment per SW1 ISDN Equipped End Office	*sC p15 cE*	377C	$	6,906.00
2.	Investment per SW2 ISDN Equipped End Office	*sC p15 cE*	377C	$	7,890.00
3.	Investment per DACS Port	*DCS cost study*	377C	$	447.75
4.	Investment per Digipac X.75' Port	*sC p15 cE*	377C	$	15,147.00
5.	Investment per Digipac Trunk Port	*sC p15 cE*	377C	$	15,147.00
6.	Number of ISDN Lines	*sC p7 H63*			788
7.	Number of SW1 ISDN EO w/X.75 Links	*sC p15 cE*			12
8.	Number of SW2 ISDN EO w/X.75 Links	*sC p15 cE*			-
9.	Number of ISDN Digipac Switches	*sC p15 cE*			2
10.	% Digipac Traffic Originating from ISDN	*sC p15 cE*			10%
11.	DS1s per Packet Switch Link	*sC p15 cE*			1
12.	Number of Links between Packet Switches	*sC p15 cE*			1
13.	Average Mileage between End Offices and DACS	*sC p15 cE*			76.62
14.	Average Mileage between Packet Switches	*sC p15 cE*			326.20
15.	DS1 Interoffice Investments (Avg of all Mileage Bands)				
	a. Terminations	*sE p11*	357C	$	1,132.04
	b. Terminations	*sE p11*	357CS	$	401.95
	c. Facilities - per Mile	*sE p11*	357C	$	2.12
	d. Facilities - per Mile	*sE p11*	357CS	$	31.42
	e. Facilities - per Mile	*sE p11*	4C	$	53.87
	f. Facilities - per Mile	*sE p11*	845C	$	2.29
	g. Facilities - per Mile	*sE p11*	85C	$	54.06

ISDN EQUIPPED END OFFICE INVESTMENT PER ISDN LINE

16.	Switch Type 1 End Office Investment	*Ln1*	377C	$	6,906.00
17.	Switch Type 1 ISDN Equipped End Offices	*Ln7*			12
18.	Total Switch Type 1 Investment	*Ln16 x Ln17*		$	82,872.00
19.	Switch Type 2 End Office Investment	*Ln2*	377C	$	7,890.00
20.	Switch Type 2 ISDN Equipped End Offices	*Ln8*			-
21.	Total Switch Type 2 Investment	*Ln19 x Ln20*		$	-
22.	Total Investment	*Ln18 + Ln21*		$	82,872.00
23.	Total ISDN Lines	*Ln6*			788
24.	Investment per ISDN Line	*Ln22 / Ln23*	377C	$	105.16

Qwest Defaults 7/20/01 10:04:18 AM

South Dakota

X.75 LINK

ISDN END OFFICE TO DACS DS1 PER ISDN LINE

25. Total DS1 Investments				
a. Total Termination	*(Ln7+Ln8) x Ln15a*	357C	$	13,584.53
b. Total Termination	*(Ln7+Ln8) x Ln15b*	357CS	$	4,823.37
c. Total Facilities	*(Ln7+Ln8) x Ln13 x Ln15c*	357C	$	1,953.55
d. Total Facilities	*(Ln7+Ln8) x Ln13 x Ln15d*	357CS	$	28,890.47
e. Total Facilities	*(Ln7+Ln8) x Ln13 x Ln15e*	4C	$	49,526.37
f. Total Facilities	*(Ln7+Ln8) x Ln13 x Ln15f*	845C	$	2,107.06
g. Total Facilities	*(Ln7+Ln8) x Ln13 x Ln15g*	85C	$	49,706.53
26. ISDN Lines	*Ln6*			788
27. DS1 Investment per Line				
a. Termination	*Ln25a / Ln26*	357C	$	17.2384
b. Termination	*Ln25b / Ln26*	357CS	$	6.1207
c. Facilities	*Ln25c / Ln26*	357C	$	2.4790
d. Facilities	*Ln25d / Ln26*	357CS	$	36.6613
e. Facilities	*Ln25e / Ln26*	4C	$	62.8478
f. Facilities	*Ln25f / Ln26*	845C	$	2.6738
g. Facilities	*Ln25g / Ln26*	85C	$	63.0764

DACS

28. Investment per DACS Port	*Ln3*	377C	$	447.75
29. Number of Ports (Incoming + Outgoing)	*Ln7 + Ln8 + Ln9*			14
30. Total DACS Investment	*Ln28 x Ln29*		$	6,268.50
31. ISDN Lines	*Ln6*			788
32. Investment per ISDN Line	*Ln30 / Ln31*	377C	$	7.9546

Packet Switching X.75 Ports (Incoming)

33. Investment per X.75 Port	*Ln4*	377C	$	15,147.00
34. Packet Switches within LATA	*Ln9*			2
35. Total Incoming Port Investment	*Ln33 x Ln34*		$	30,294.00
36. ISDN Lines	*Ln6*			788
37. Investment per ISDN Line	*Ln35 / Ln36*	377C	$	38.44

Packet Switching Trunk Ports (Outgoing)

38. Investment per Packet Switch Trunk Port	*Ln5*	377C	$	15,147.00
39. Number of Trunk Ports per Packet Switch	*sC p18 cE*			2
40. Packet Switches within LATA	*Ln9*			2
41. Total Trunk Port Investment	*Ln38 x Ln39 x Ln40*		$	60,588.00
42. ISDN Lines	*Ln6*			788
43. Investment per ISDN Line	*Ln41 / Ln42*		$	76.88
44. Percent Originating Digipac Traffic from ISDN	*Ln10*			10%
45. Investment per ISDN Line	*Ln43 x Ln44*	377C	$	7.69

Qwest Defaults 7/20/01 10:04:18 AM

South Dakota

X.75 LINK

Inter Packet Switch IntraLATA Trunks

46. Total DS1 Investments for Packet Switch Links				
a. Termination	*Ln12 x Ln11 x Ln15a*	357C	$	1,132.04
b. Termination	*Ln12 x Ln11 x Ln15b*	357CS	$	401.95
c. Facilities	*Ln12 x Ln11 x Ln14 x Ln15c*	357C	$	693.08
d. Facilities	*Ln12 x Ln11 x Ln14 x Ln15d*	357CS	$	10,249.79
e. Facilities	*Ln12 x Ln11 x Ln14 x Ln15e*	4C	$	17,571.03
f. Facilities	*Ln12 x Ln11 x Ln14 x Ln15f*	845C	$	747.55
g. Facilities	*Ln12 x Ln11 x Ln14 x Ln15g*	85C	$	17,634.94
47. Percent Originating Digipac Traffic from ISDN	*Ln10*			10%
48. Investment per Link for ISDN				
a. Termination	*Ln46a x Ln47*	357C	$	113.20
b. Termination	*Ln46b x Ln47*	357CS	$	40.19
c. Facilities	*Ln46c x Ln47*	357C	$	69.31
d. Facilities	*Ln46d x Ln47*	357CS	$	1,024.98
e. Facilities	*Ln46e x Ln47*	4C	$	1,757.10
f. Facilities	*Ln46f x Ln47*	845C	$	74.75
g. Facilities	*Ln46g x Ln47*	85C	$	1,763.49
49. ISDN Lines	*Ln6*			788
50. Investment per ISDN Line				
a. Termination	*Ln48a / Ln49*	357C	$	0.1437
b. Termination	*Ln48b / Ln49*	357CS	$	0.0510
c. Facilities	*Ln48c / Ln49*	357C	$	0.0880
d. Facilities	*Ln48d / Ln49*	357CS	$	1.3007
e. Facilities	*Ln48e / Ln49*	4C	$	2.2297
f. Facilities	*Ln48f / Ln49*	845C	$	0.0949
g. Facilities	*Ln48g / Ln49*	85C	$	2.2378

Qwest Defaults 7/20/01 10:04:18 AM

South Dakota

X.75 LINK

SUMMARY

51.	Investment by Element per ISDN Line				
	a. ISDN Equipped End Office	*Ln24*	377C	$	105.1626
	b. ISDN End Office to DACS	*Ln27a*	357C	$	17.2384
	c. ISDN End Office to DACS	*Ln27b*	357CS	$	6.1207
	d. ISDN End Office to DACS	*Ln27c*	357C	$	2.4790
	e. ISDN End Office to DACS	*Ln27d*	357CS	$	36.6613
	f. ISDN End Office to DACS	*Ln27e*	4C	$	62.8478
	g. ISDN End Office to DACS	*Ln27f*	845C	$	2.6738
	h. ISDN End Office to DACS	*Ln27g*	85C	$	63.0764
	i. DACS	*Ln32*	377C	$	7.9546
	j. Packet Switch Incoming Ports	*Ln37*	377C	$	38.4424
	k. Packet Switch Outgoing Trunk Ports	*Ln45*	377C	$	7.6885
	l. Inter Packet Switch Links	*Ln50a*	357C	$	0.1437
	m. Inter Packet Switch Links	*Ln50b*	357CS	$	0.0510
	n. Inter Packet Switch Links	*Ln50c*	357C	$	0.0880
	o. Inter Packet Switch Links	*Ln50d*	357CS	$	1.3007
	p. Inter Packet Switch Links	*Ln50e*	4C	$	2.2297
	q. Inter Packet Switch Links	*Ln50f*	845C	$	0.0949
	r. Inter Packet Switch Links	*Ln50g*	85C	$	2.2378
52.	Investment by Account per ISDN Line	*Ln51a+Ln51i+Ln51j+Ln51k*	377C	**$**	**159.2480**
		Ln51b+Ln51d+Ln51l+Ln51n	357C	**$**	**19.9491**
		Ln51c+Ln51e+Ln51m+Ln51o	357CS	**$**	**44.1337**
		Ln51f+Ln51p	4C	**$**	**65.0775**
		Ln51g+Ln51q	845C	**$**	**2.7687**
		Ln51h+Ln51r	85C	**$**	**65.3142**

Section C - Line and Trunk Ports
DS0 Trunk Investment Dev

		DS0 Analog Trunk Port		
		South Dakota		
		Qwest Defaults 7/20/01 10:04:18 AM		
			Source	
1)		DS1 Trunk Port Investment	*sC p14 E5*	3410.46
2)		DS1 - DS0 Multiplexing	*sE p9 E23*	10619.935
3)		Sub-total	*L1 + L2*	14030.395
4)		DS0 per DS1	*industry standard*	24
5)		DS0 Investment	*L3 / L4*	584.5998
6)		Utilization Factor	*sC p15 cE*	73%
7)		DS0 Investment	*L5 / L6*	798.30643

DIRECT INWARD DIALING (DID/PBX TRUNK SERVICE)					
			South Dakota		
Qwest Defaults 7/20/01 10:04:18 AM					
Conersion of DS1 Investments to DS0					
Multiplexer (Required for analog port)					
	1	Investment for DS1 to DS0 Multiplexer	*sE p9 E23*	$ 10,619.94	
	2	DS0 Channel Capacity of Multiplexer		24	
	3	Investment per DS0 Channel	*Ln1 / Ln2*	$ 442.50	
	4	% Analog Ports	*sC p15 cE*	0.18%	
	5	Investment per DS0 Channel	*Ln4 X Ln3*	$ 0.79	257C
MDF (Required for analog port)					
	6	MDF Investment	*sD p10 B17*	$ 29.72	
	7	% Analog Ports	*Ln12*	0.18%	
	8	Investment per DS0 Channel	*Ln7 X Ln6*	$ 0.05	377C
DSX-1 Panel					
	9	Investment for DSX-1 Cross-Connect Panel	*sC p15 cE*	$ 17.49	
	10	DS0 Channel Capacity of DSX-1 Panel		24	
	11	Investment per DS0 Channel	*Ln9 / Ln10*	$ 0.73	377C

Section C - Line and Trunk Ports
SM Port Feature Output

	A	B	C	D	E	F
1	South Dakota		Direct - Category 1	Direct - Category 2	Total	
2	Qwest Defaults 7/20/01 10:04:18 AM					
3	**LIS Analog Port**	377C	47.84	4.51	52.35	
4						
5	**DS1 Trunk Port**	377C	2674.85	735.61	3410.46	
6						
7	**ISDN BRI Port**					
8	Nonintegrated BRI w/o Packet	377C	179.1908	1.606991	180.797791	
9	D Channel- Port Ltd. Packet Switch	377C	54.61959	0	54.61959	
10	*Total*				235.417381	
11						
12	**ISDN BRI Features**					
13	D Inter Switch Packet - Port Ltd. PS	377C	2.893731	3.225119	6.11885	
14	Nonintegrated Switched Packet Call Setup (SW1 Only)	377C	0.074708	0	0.074708	
15	Calling Number Delivery Blocking - Per Line	377C	0.003623	0.776847	0.78047	Feature
16	Analog Call Appearance	377C	9.606581	0	9.606581	
17	Total				26.18719	
18						
19						
20	**ISDN PRI Port**					
21	Direct Inward Dialing (Incoming) (PRI)	377C	65.94528	10.89786	76.84314	Feature
22	Direct Outward Dialing (Dial 9) Incoming (PRI)	377C	65.94528	10.89786	76.84314	Feature
23	**23B+D**					
24	PRI w/o Packet (23B+D)	377C	9294.055	143.2034	9437.2584	
25	Multiline Hunt - Circular	377C	11.36195	0	11.36195	Feature
26	Total 23B+D				9448.62035	
27						
28						
29	**DID/PBX Trunk Port**					
30	TRUNKSIDE Digital Facility Termination (DS0)	377C	137.9232	15.20366	153.12686	
31	BASIC CENTRON Direct Inward Dialing	377C	21.1703	1.569368	22.739668	
32						
33						

	A	B	C	D	E	F
1	Qwest Defaults 7/20/01 10:04:18 AM					
2						
3			Port			
4			South Dakota			
5	**Description**	**Default Source**	**Default Value**	**Overrides**	**This Run**	**Instructions**
6				AP p16		
7	BRI Capital lease period - Years	*Product Management*	10		10	
8	BRI SW 1 Capital Lease Expense / Port	*Capital Lease Expense / Port*	100		100	
9	BRI SW 2 Capital Lease Expense / Port	*Capital Lease Expense / Port*	150		150	
10	ISDN BRI Number of SW1 ISDN EO w/X.75 Links	*Forecast*	12		12	
11	ISDN BRI Number of SW2 ISDN EO w/X.75 Links	*Forecast*	0		0	
12	ISDN BRI Number of ISDN Digipac Switches	*Design Parameter*	2		2	
13	ISDN BRI % Digipac Traffic Originating from ISDN	*Design Parameter*	10%		10%	
14	ISDN BRI DS1s per Packet Switch Link	*Design Parameter*	1		1	
15	ISDN BRI Number of Links between Packet Switches	*Design Parameter*	1		1	
16	ISDN BRI Average Mileage between End Offices and DACS	*X.75 File*	76.62		76.62	
17	ISDN BRI Average Mileage between Packet Switches	*V&H Coordinates*	326.2		326.2	
18	ISDN BRI Number of Trunk Ports per Packet Switch	*Assumption*	2		2	
19	ISDN BRI SW1 x.75 End Office DS1 Port Investment	*Installed investment*	$ 6,906.00		$ 6,906.00	
20	ISDN BRI SW2 x.75 End Office DS1 Port Investment	*Installed investment*	$ 7,890.00		$ 7,890.00	
21	ISDN BRI X.75 Digipac Port (Incoming or Outgoing) EFI Investment	*Installed investment*	$ 15,147.00		$ 15,147.00	
22	DS0 Analog Trunk Equipment Utilization Factor		73.23%		73.23%	
23	% Analog DID Trunk Ports	*Dec 2000 in-service*	0.18%		0.18%	
24	Investment for DSX-1 Cross-Connect Panel For DID Trunk Port	*DS1NACmodel v11002.0*	$ 17.49		$ 17.49	
25						
26	This Run equals Default Value if Overrides is empty					
27	s = section					
28	p = page					
29	c = column					
30	r = row					
31	Upper Case letter with number indicates a cell location, i.e. G40					

CONTINUATION

[8]

Scan ~ _____ ~ # Pages [___]

Section D - Local Traffic
Local-Develop Total Prod Costs

Row	Qwest Defaults 7/20/01 10:04:18 AM South Dakota	Factor Value [AP p1 cB]	Local Usage Costs Local Switching UNE per Minute of Use	Tandem Switching UNE per Minute of Use	Local Switching LIS per Minute of Use	Tandem Switching LIS per Minute of Use	Tandem Switched Local Transport Fixed per Minute of Use 0 to 8 Miles	Fixed per Minute of Use 8 to 25 Miles	Fixed per Minute of Use 25 to 50 Miles	Fixed per Minute of Use Over 50 Miles	Distance Sensitive per Minute of Use from 0 to 8 miles	Distance Sensitive per Minute of Use from 8 to 25 miles	Distance Sensitive per Minute of Use from 25 to 50 miles	Distance Sensitive per Minute of Use over 50 miles
		A	B	C	D	E	F	G	H	I	J	K	L	M
1	**Investment**	sD p2-4 cD	0.0125184	0.010788112	0.007303232	0.00808091	0.00211195	0.002273462	0.002264278	0.002062988	0.0004114	0.0002007	0.0001080	0.0000299
2														
3	Investment Based Costs (IBC)	sD p2-4 cJ	0.0024996	0.0021554	0.0014582	0.0016025	0.0004455	0.0004796	0.0004776	0.0004352	0.0000700	0.0000317	0.0000173	0.0000049
4	Element Specific Expenses		0.0002930	0.0002770	0.0003430									
5	***Total IBC + Element Specific Expenses***		0.0027926	0.0024324	0.0018012	0.0016025	0.0004455	0.0004796	0.0004776	0.0004352	0.0000700	0.0000317	0.0000173	0.0000049
6														
7	***Directly Assigned***													
8	Product Management Expense	0.02557	0.0000714	0.0000622	0.0000460	0.0000410	0.0000114	0.0000123	0.0000122	0.0000111	0.0000018	0.0000008	0.0000004	0.0000001
9	Sales Expense	0.00922	0.0000258	0.0000224	0.0000166	0.0000148	0.0000041	0.0000044	0.0000044	0.0000040	0.0000006	0.0000003	0.0000002	0.0000000
10	Product Advertising Expense	0.00000	0.0000000	0.0000000	0.0000000	0.0000000	0.0000000	0.0000000	0.0000000	0.0000000	0.0000000	0.0000000	0.0000000	0.0000000
11	Business Fees (Other Operating Taxes)	0.00203	0.0000059	0.0000051	0.0000038	0.0000034	0.0000009	0.0000010	0.0000010	0.0000009	0.0000001	0.0000001	0.0000000	0.0000000
12	***Directly Assigned Costs***		0.0001030	0.0000897	0.0000664	0.0000591	0.0000164	0.0000177	0.0000176	0.0000161	0.0000026	0.0000012	0.0000006	0.0000002
13														
14	***Total Direct***		0.0028956	0.0025221	0.0018676	0.0016616	0.0004620	0.0004973	0.0004953	0.0004513	0.0000726	0.0000329	0.0000180	0.0000050
15														
16	***Directly Attributed***													
17	Network Operations	0.04088	0.0001184	0.0001031	0.0000763	0.0000679	0.0000189	0.0000203	0.0000202	0.0000184	0.0000030	0.0000013	0.0000007	0.0000002
18	Network Support Assets	0.01536	0.0000445	0.0000387	0.0000287	0.0000255	0.0000071	0.0000076	0.0000076	0.0000069	0.0000011	0.0000005	0.0000003	0.0000001
19	General Support Assets	0.06951	0.0002013	0.0001753	0.0001298	0.0001155	0.0000321	0.0000346	0.0000344	0.0000314	0.0000050	0.0000023	0.0000012	0.0000004
20	General Purpose Computers	0.03471	0.0001005	0.0000876	0.0000648	0.0000577	0.0000160	0.0000173	0.0000172	0.0000157	0.0000025	0.0000011	0.0000006	0.0000002
21	Uncollectible - Interconnect	0.00040	0.0000012	0.0000010	0.0000007	0.0000007	0.0000002	0.0000002	0.0000002	0.0000002	0.0000000	0.0000000	0.0000000	0.0000000
22	Accounting and Finance Expense	0.00884	0.0000256	0.0000223	0.0000165	0.0000147	0.0000041	0.0000044	0.0000044	0.0000040	0.0000006	0.0000003	0.0000002	0.0000000
23	Human Resources Expense	0.00814	0.0000236	0.0000205	0.0000152	0.0000135	0.0000038	0.0000041	0.0000040	0.0000037	0.0000006	0.0000003	0.0000001	0.0000000
24	Information Management Expense	0.05701	0.0001651	0.0001438	0.0001065	0.0000947	0.0000263	0.0000283	0.0000282	0.0000257	0.0000041	0.0000019	0.0000010	0.0000003
25	Intangibles	0.00209	0.0000061	0.0000053	0.0000039	0.0000035	0.0000010	0.0000010	0.0000010	0.0000009	0.0000002	0.0000001	0.0000000	0.0000000
26	***Total Directly Attributed Costs***		0.0006861	0.0005976	0.0004425	0.0003937	0.0001095	0.0001178	0.0001174	0.0001069	0.0000172	0.0000078	0.0000043	0.0000012
27														
28	***Total Element Long Run Incremental Costs***		0.0035818	0.0031197	0.0023102	0.0020554	0.0005714	0.0006151	0.0006126	0.0005582	0.0000898	0.0000407	0.0000222	0.0000062
29														
30	***Common***													
31	Executive Expense	0.00780	0.0000280	0.0000243	0.0000180	0.0000160	0.0000045	0.0000048	0.0000048	0.0000044	0.0000007	0.0000003	0.0000002	0.0000000
32	Planning Expense	0.00058	0.0000021	0.0000018	0.0000013	0.0000012	0.0000003	0.0000004	0.0000004	0.0000003	0.0000001	0.0000000	0.0000000	0.0000000
33	External Relations Expense	0.01303	0.0000467	0.0000406	0.0000301	0.0000268	0.0000074	0.0000080	0.0000080	0.0000073	0.0000012	0.0000005	0.0000003	0.0000001
34	Legal Expense	0.00615	0.0000220	0.0000192	0.0000142	0.0000126	0.0000035	0.0000038	0.0000038	0.0000034	0.0000006	0.0000003	0.0000001	0.0000000
35	Other Procurement Expense	0.00236	0.0000085	0.0000074	0.0000055	0.0000048	0.0000013	0.0000015	0.0000014	0.0000013	0.0000002	0.0000001	0.0000001	0.0000000
36	Research and Development Expense	0.00004	0.0000001	0.0000001	0.0000001	0.0000001	0.0000000	0.0000000	0.0000000	0.0000000	0.0000000	0.0000000	0.0000000	0.0000000
37	Other General and Admin Exp	0.01521	0.0000545	0.0000475	0.0000351	0.0000313	0.0000087	0.0000094	0.0000093	0.0000085	0.0000014	0.0000006	0.0000003	0.0000001
38	***Total Common Costs***		0.0001618	0.0001409	0.0001043	0.0000928	0.0000258	0.0000278	0.0000277	0.0000252	0.0000041	0.0000018	0.0000010	0.0000003
39														
40	***TELRIC + Common***		**0.0037436**	**0.0032606**	**0.0024145**	**0.0021482**	**0.0005972**	**0.0006429**	**0.0006403**	**0.0005834**	**0.0000939**	**0.0000425**	**0.0000232**	**0.0000065**

c = column, r = row, s = section, p = page, AP = Appendix

Section D - Local Traffic
Local - Investment Cost Calc

	A	B	C	D	E	F	G	H	I	J	K
1	Qwest Defaults 7/20/01 10:04:18 AM						**Local Usage**				
2	South Dakota			Investment	Depreciation	Cost of Money	Income Tax	Ad Valorem	Maintenance	Digital Electronic Expense - RTU 377C	Total Capital Costs
3	Acct	FRC	Account Name		cD*(AP p7 cA)	cD*(AP p7 cB)	cD*(AP p7 cC)	cD*(AP p7 cD)	cD*(AP p7 cE)	cD*(AP p1 B5)	sum(cE:cJ)
4	Local Switching (UNE)										
5	2111	20C	Land	0.0000163	0.0000000	0.0000016	0.0000006	0.0000001	0.0000004		0.0000027
6	2121	110C	Building	0.0006256	0.0000162	0.0000468	0.0000177	0.0000054	0.0000140		0.0001001
7	2124	361C	General Purpose Comp.	0.0002267	0.0000374	0.0000108	0.0000041	0.0000020	0.0000000		0.0000542
8	2212	377C	Digital Switch	0.0116498	0.0012688	0.0005294	0.0002002	0.0001003	0.0002439	0.0000000	0.0023427
9			Total	0.0125184	0.0013223	0.0005886	0.0002226	0.0001078	0.0002583	0.0000000	0.0024996
10	Tandem Switching (UNE)										
11	2111	20C	Land	0.0000140	0.0000000	0.0000014	0.0000005	0.0000001	0.0000003		0.0000023
12	2121	110C	Building	0.0005375	0.0000139	0.0000402	0.0000152	0.0000046	0.0000120		0.0000860
13	2124	361C	General Purpose Comp.	0.0002267	0.0000374	0.0000108	0.0000041	0.0000020	0.0000000		0.0000542
14	2212	377C	Digital Switch	0.0100099	0.0010902	0.0004549	0.0001720	0.0000862	0.0002096	0.0000000	0.0020129
15			Total	0.0107881	0.0011414	0.0005073	0.0001918	0.0000929	0.0002219	0.0000000	0.0021554
16	Local Switching (LIS)										
17	2111	20C	Land	0.0000091	0.0000000	0.0000009	0.0000003	0.0000001	0.0000002		0.0000015
18	2121	110C	Building	0.0003480	0.0000090	0.0000261	0.0000099	0.0000030	0.0000078		0.0000557
19	2124	361C	General Purpose Comp.	0.0001110	0.0000183	0.0000053	0.0000020	0.0000010	0.0000000		0.0000265
20	2212	377C	Digital Switch (No RTU)	0.0003540	0.0000386	0.0000161	0.0000061	0.0000030	0.0000074		0.0000712
21	2212	377C	Digital Switch	0.0064811	0.0007059	0.0002945	0.0001114	0.0000558	0.0001357	0.0000000	0.0013033
22			Total	0.0073032	0.0007717	0.0003428	0.0001296	0.0000629	0.0001511	0.0000000	0.0014582
23	Tandem Switching (LIS)										
24	2111	20C	Land	0.0000101	0.0000000	0.0000010	0.0000004	0.0000001	0.0000002		0.0000016
25	2121	110C	Building	0.0005375	0.0000139	0.0000402	0.0000152	0.0000046	0.0000120		0.0000860
26	2212	377C	Digital Switch (No RTU)	0.0003540	0.0000386	0.0000161	0.0000061	0.0000030	0.0000074		0.0000712
27	2212	377C	Digital Switch	0.0071793	0.0007819	0.0003263	0.0001234	0.0000618	0.0001503	0.0000000	0.0014437
28			Total	0.0080809	0.0008343	0.0003836	0.0001451	0.0000696	0.0001700	0.0000000	0.0016025
29	Fixed per MOU										
30	OVER 0 TO 8										
31	2111	20C	Land	0.0000028	0.0000000	0.0000003	0.0000001	0.0000000	0.0000001		0.0000005
32	2121	110C	Building	0.0001073	0.0000028	0.0000080	0.0000030	0.0000009	0.0000024		0.0000172
33	2232.3	357C	Other Digital Equipment	0.0014362	0.0001576	0.0000653	0.0000247	0.0000124	0.0000472		0.0003072
34	2233.3	357CS	Other Digital Equipment	0.0005657	0.0000621	0.0000257	0.0000097	0.0000049	0.0000184		0.0001208
35			Total	0.0021119	0.0002224	0.0000993	0.0000376	0.0000182	0.0000681	0.0000000	0.0004455
36	OVER 8 TO 25										
37	2111	20C	Land	0.0000030	0.0000000	0.0000003	0.0000001	0.0000000	0.0000001		0.0000005
38	2121	110C	Building	0.0001155	0.0000030	0.0000086	0.0000033	0.0000010	0.0000026		0.0000185
39	2232.3	357C	Other Digital Equipment	0.0014427	0.0001583	0.0000656	0.0000248	0.0000124	0.0000475		0.0003086
40	2233.3	357CS	Other Digital Equipment	0.0007122	0.0000781	0.0000324	0.0000122	0.0000061	0.0000231		0.0001520
41			Total	0.0022735	0.0002394	0.0001069	0.0000404	0.0000196	0.0000733	0.0000000	0.0004796

Section D - Local Traffic
Local - Investment Cost Calc

	A	B	C	D	E	F	G	H	I	J	K
1	Qwest Defaults 7/20/01 10:04:18 AM						**Local Usage**				
2	South Dakota			Investment	Depreciation	Cost of Money	Income Tax	Ad Valorem	Maintenance	Digital Electronic Expense - RTU 377C	Total Capital Costs
3	Acct	FRC	Account Name		cD*(AP p7 cA)	cD*(AP p7 cB)	cD*(AP p7 cC)	cD*(AP p7 cD)	cD*(AP p7 cE)	cD*(AP p1 B5)	sum(cE:cJ)
42	OVER 25 TO 50										
43	2111	20C	Land	0.0000030	0.0000000	0.0000003	0.0000001	0.0000000	0.0000001		0.0000005
44	2121	110C	Building	0.0001150	0.0000030	0.0000086	0.0000033	0.0000010	0.0000026		0.0000184
45	2232.3	357C	Other Digital Equipment	0.0014427	0.0001583	0.0000656	0.0000248	0.0000124	0.0000475		0.0003086
46	2233.3	357CS	Other Digital Equipment	0.0007035	0.0000772	0.0000320	0.0000121	0.0000061	0.0000229		0.0001502
47			Total	**0.0022643**	**0.0002384**	**0.0001065**	**0.0000403**	**0.0000195**	**0.0000730**	**0.0000000**	**0.0004776**
48	OVER 50										
49	2111	20C	Land	0.0000027	0.0000000	0.0000003	0.0000001	0.0000000	0.0000001		0.0000004
50	2121	110C	Building	0.0001048	0.0000027	0.0000078	0.0000030	0.0000009	0.0000023		0.0000168
51	2232.3	357C	Other Digital Equipment	0.0014339	0.0001573	0.0000652	0.0000246	0.0000124	0.0000472		0.0003067
52	2233.3	357CS	Other Digital Equipment	0.0005215	0.0000572	0.0000237	0.0000090	0.0000045	0.0000169		0.0001113
53			Total	**0.0020630**	**0.0002173**	**0.0000970**	**0.0000367**	**0.0000178**	**0.0000665**	**0.0000000**	**0.0004352**
54	Distance Sensitive per MOU Per Airline Mile										
55	OVER 0 TO 8										
56	2111	20C	Land	0.0000001	0.0000000	0.0000000	0.0000000	0.0000000	0.0000000		0.0000000
57	2121	110C	Building	0.0000044	0.0000001	0.0000003	0.0000001		0.0000001		0.0000007
58	2232.3	357C	Other Digital Equipment	0.0000015	0.0000002	0.0000001	0.0000000	0.0000000	0.0000001		0.0000003
59	2233.3	357CS	Other Digital Equipment	0.0000812	0.0000089	0.0000037	0.0000014	0.0000007	0.0000026		0.0000173
60	2422.12,.22	85C	UG Cbl Nonmetallic	0.0001573	0.0000111	0.0000089	0.0000034	0.0000014	0.0000011		0.0000259
61	2423.12,.22	845C	Buried Cbl Nonmetallic	0.0001447	0.0000088	0.0000083	0.0000031	0.0000012	0.0000016		0.0000231
62	2441	4C	Conduit System	0.0000221	0.0000005	0.0000014	0.0000005	0.0000002	0.0000001		0.0000028
63			Total	**0.0004114**	**0.0000296**	**0.0000227**	**0.0000086**	**0.0000035**	**0.0000057**	**0.0000000**	**0.0000700**
64	OVER 8 TO 25										
65	2111	20C	Land	0.0000000	0.0000000	0.0000000	0.0000000	0.0000000	0.0000000		0.0000000
66	2121	110C	Building	0.0000018	0.0000000	0.0000001	0.0000001	0.0000000	0.0000000		0.0000003
67	2232.3	357C	Other Digital Equipment	0.0000006	0.0000001	0.0000000	0.0000000	0.0000000	0.0000000		0.0000001
68	2233.3	357CS	Other Digital Equipment	0.0000338	0.0000037	0.0000015	0.0000006	0.0000003	0.0000011		0.0000072
69	2422.12,.22	85C	UG Cbl Nonmetallic	0.0000719	0.0000051	0.0000041	0.0000015	0.0000006	0.0000005		0.0000118
70	2423.12,.22	845C	Buried Cbl Nonmetallic	0.0000208	0.0000013	0.0000012	0.0000004	0.0000002	0.0000002		0.0000033
71	2441	4C	Conduit System	0.0000717	0.0000015	0.0000046	0.0000018	0.0000006	0.0000004		0.0000089
72			Total	**0.0002007**	**0.0000117**	**0.0000116**	**0.0000044**	**0.0000017**	**0.0000023**	**0.0000000**	**0.0000317**

Section D - Local Traffic
Local - Investment Cost Calc

	A	B	C	D	E	F	G	H	I	J	K
1	Qwest Defaults 7/20/01 10:04:18 AM						**Local Usage**				
2	South Dakota			Investment	Depreciation	Cost of Money	Income Tax	Ad Valorem	Maintenance	Digital Electronic Expense - RTU 377C	Total Capital Costs
3	Acct	FRC	Account Name		cD*(AP p7 cA)	cD*(AP p7 cB)	cD*(AP p7 cC)	cD*(AP p7 cD)	cD*(AP p7 cE)	cD*(AP p1 B5)	sum(cE:cJ)
73	**OVER 25 TO 50**										
74	2111	20C	Land	0.0000000	0.0000000	0.0000000	0.0000000	0.0000000	0.0000000		0.0000000
75	2121	110C	Building	0.0000010	0.0000000	0.0000001	0.0000000	0.0000000	0.0000000		0.0000002
76	2232.3	357C	Other Digital Equipment	0.0000004	0.0000000	0.0000000	0.0000000	0.0000000	0.0000000		0.0000001
77	2233.3	357CS	Other Digital Equipment	0.0000187	0.0000021	0.0000009	0.0000003	0.0000002	0.0000006		0.0000040
78	2422.12,.22	85C	UG Cbl Nonmetallic	0.0000315	0.0000022	0.0000018	0.0000007	0.0000003	0.0000002		0.0000052
79	2423.12,.22	845C	Buried Cbl Nonmetallic	0.0000249	0.0000015	0.0000014	0.0000005	0.0000002	0.0000003		0.0000040
80	2441	4C	Conduit System	0.0000314	0.0000007	0.0000020	0.0000008	0.0000003	0.0000002		0.0000039
81			**Total**	**0.0001080**	**0.0000065**	**0.0000062**	**0.0000023**	**0.0000009**	**0.0000013**	**0.0000000**	**0.0000173**
82	**OVER 50**										
83	2111	20C	Land	0.0000000	0.0000000	0.0000000	0.0000000	0.0000000	0.0000000		0.0000000
84	2121	110C	Building	0.0000004	0.0000000	0.0000000	0.0000000	0.0000000	0.0000000		0.0000001
85	2232.3	357C	Other Digital Equipment	0.0000006	0.0000001	0.0000000	0.0000000	0.0000000	0.0000000		0.0000001
86	2233.3	357CS	Other Digital Equipment	0.0000065	0.0000007	0.0000003	0.0000001	0.0000001	0.0000002		0.0000014
87	2422.12,.22	85C	UG Cbl Nonmetallic	0.0000098	0.0000007	0.0000006	0.0000002	0.0000001	0.0000001		0.0000016
88	2423.12,.22	845C	Buried Cbl Nonmetallic	0.0000029	0.0000002	0.0000002	0.0000001	0.0000000	0.0000000		0.0000005
89	2441	4C	Conduit System	0.0000097	0.0000002	0.0000006	0.0000002	0.0000001	0.0000001		0.0000012
90			**Total**	**0.0000299**	**0.0000019**	**0.0000017**	**0.0000006**	**0.0000003**	**0.0000004**	**0.0000000**	**0.0000049**
91	**Investment Sources**										
92	Land= (AP p12 D10) * 377C + (AP p12 E10) * (57C+257C+357C+357CS) Building = (AP p12 B10) * 377C + (AP p12 C10) * (57C+257C+357C+357CS)										
93	Computer = sD p5 E7, LS UNE 377C = sD p7 K12+K14+K15, LS LIS 377C = sD p8 K12, Tandem UNE 377C = sD p7 M28+M29, Tandem LIS 377C = sD p8 M27										
94	Fixed and distance sensitive = sD p12 cH										

	A	B	C	D	E	F
1	Qwest Defaults 7/20/01 10:04:18 AM					
2			**Local Interconnection Usage**			
3			**South Dakota**			
4	**Description**	**Default Source**	**Default Value**	**Overrides** AP p15	**This Run**	**Instructions**
5						
6	Average Hold Time	sD p13 cD	2.525090		2.525090	Enter average hold time in minutes.
7	Billing and Collection Investment	AP p10 F9	0.000111		0.000111	Enter investment per MOU required for B&C
8	Billing and Collection Direct Expenses	sD p7 I40	0.000277		0.000277	Enter direct labor expenses associated with B & C per MOU
9	Intercept Direct Expenses	sD p7 I42	0.000016		0.000016	Enter direct expenses for non chargeable intercept per MOU
10	HP Measurement Investments	sD p8 G43	0.000354		0.000354	Enter measurement equipment investment per MOU
11	HP Measurement Expenses	sD p8 I43	0.000050		0.000050	Enter measurement direct expenses per MOU
12	AMA Investment	sD p7 I44	0.003616		0.003616	Enter AMA Measurement Investment per completed call
13						
14	This Run equals Default Value if Overrides is empty					
15	s = section					
16	p = page					
17	c = column					
18	r = row					
19	Upper Case letter with number indicates a cell location, i.e. G40					
20	The spreadsheet shows the Override data entered by the user in ICM's custom input screens. If the					
21	user has input override data, the spreadsheet will determine this and display the override data in the					
22	Overrides column. The this run column will show the Override or the Default Value if no override					
23	has been entered.					
24						

Cell: A9
Comment: NON CHARGABLE INTERCEPT

Description
Non chargable Intercept service provides explanatory information to callers dialing changed or disconnected telephone numbers. The intercept messages are delivered mechanically. The results of the Intercept study are used in the usage portion of other studies (Basic Exchange, Local Interconnection, Toll, etc.).

Investment Development

The 1996 USWC Non Chargeable Intercept expenses were divided by USWC total annual messages and/or conversation minutes to develop the 1996 USWC Non Chargeable Intercept costs per message and per minute. The expenses included costs related to intercept equipment, facilities, transport, and local switching.

The 1989 switch investment and software Right-to-Use (RTU) expense were projected to a 1996 level using Telephone Plant Index (TPI) factors.

The 1989 Intercept database investment and software Right-to Use (RTU) expense were projected to a 1996 level using TPI factors. The 1989 Intercept database hardware maintenance and software support were assumed to remain constant through 1996.

The 1991 facilities investments were projected to a 1996 level using the appropriate TPI factor. The USWC transport and local switching costs were developed at a 1996 level. The USWC total annual messages and conversation minutes are from the 1996 USWC Switching Usage Model.

The 1996 Intercept expense per minute of use was input to USWICM where it was TPI'ed to a 1998 level.

USWC Cost Models Used

SCM
Transport Model

Additional Spreadsheets Used

See the Non Chargable Intercept Study for Excel spreadsheets

7/24/01

Mapping of Transport Module Invvestment Output to Investment for Local Interconnection Service

All Times of Day

	FACILITIES				TERMINATIONS				
	Variable				Fixed				
FRC	Set-Up Inv. per Call per Mile	per Minute Inv. per Mile	Average Hold Time per Call	Inv. per Minute of Use per Mile	Set-Up Inv. per Call	per Minute Inv.	Average Hold Time per Call	Number of Termination Locations	Inv. per Minute of Use
	A	B	C	D=(A/C)+B	E	F	G	H	I=((E/G)+F)xH
OVER 0 TO 8									
357C	$.00000032	$.00000141	2.53	$.00000154	$.00014865	$.00065922	2.53	2.00	$.00143619
357CS	$.00001680	$.00007451	2.53	$.00008117	$.00005855	$.00025964	2.53	2.00	$.00056566
4C	$.00003244	$.00000926	2.53	$.00002211					
845C	$.00000209	$.00014388	2.53	$.00014471					
85C	$.00003256	$.00014440	2.53	$.00015730					
OVER 8 TO 25									
357C	$.00000012	$.00000055	2.53	$.00000060	$.00014933	$.00066223	2.53	2.00	$.00144275
357CS	$.00000700	$.00003104	2.53	$.00003381	$.00007372	$.00032690	2.53	2.00	$.00071219
4C	$.00001483	$.00006579	2.53	$.00007166					
845C	$.00000431	$.00001910	2.53	$.00002081					
85C	$.00001489	$.00006602	2.53	$.00007192					
OVER 25 TO 50									
357C	$.00000009	$.00000038	2.53	$.00000041	$.00014933	$.00066223	2.53	2.00	$.00144275
357CS	$.00000387	$.00001717	2.53	$.00001870	$.00007282	$.00032291	2.53	2.00	$.00070349
4C	$.00000650	$.00002884	2.53	$.00003142					
845C	$.00000516	$.00002288	2.53	$.00002492					
85C	$.00000653	$.00002895	2.53	$.00003153					
OVER 50									
357C	$.00000013	$.00000059	2.53	$.00000064	$.00014842	$.00065819	2.53	2.00	$.00143394
357CS	$.00000135	$.00000597	2.53	$.00000650	$.00005398	$.00023937	2.53	2.00	$.00052150
4C	$.00000201	$.00000892	2.53	$.00000972					
845C	$.00000060	$.00000264	2.53	$.00000288					
85C	$.00000202	$.00000896	2.53	$.00000976					
Average									
357C	$.00000015	$.00000069	2.53	$.00000075	$.00014876	$.00065967	2.53	2.00	$.00143717
357CS	$.00000523	$.00002320	2.53	$.00002527	$.00006095	$.00027027	2.53	2.00	$.00058881
4C	$.00000974	$.00004319	2.53	$.00004705					
845C	$.00000224	$.00000992	2.53	$.00001081					
85C	$.00000977	$.00004335	2.53	$.00004722					

Notes:

Columns A, B, E and F are from sD p13, DS0 Switched TM Output spreadsheet
Columns C and G are from sD p6, Usage Form.
Column H accounts for one each Termination located in End Office and Tandem

	A	B	C	D
1	Qwest Defaults 7/20/01 10:04:18 AM			
2	Switching Module Usage Outputs			
3	South Dakota	**Total Investments**		
4	**Investment Description**	**Generic With & WO SS7**	**With SS7**	**Without SS7**
5	**Switching Investment Totals**	Sum of TSLRI and Shared cB r21:r65		
6	End Office Switching - Intraoffice Set up [IAO MSGS]	0.006718		
7	End Office Switching - Intraoffice Conversation Minute [IAO MINS]	0.005285		
8	End Office Switching - Originating Interoffice Set up [IEO ORIG MSGS]		0.015093	0.005221
9	End Office Switching - Originating Interoffice Conversation Minute [IEO ORIG MINS]	0.004341		
10	End Office Switching - Terminating Interoffice Set up [IEO TERM MSGS]		0.014753	0.005404
11	End Office Switching - Terminating Interoffice Conversation Minute [IEO TERM MINS]	0.004341		
12	End Office Switching - Average Interoffice Set up [IEO MSG]		0.014923	0.005312
13	End Office Switching - Average Interoffice Conversation Minute [IEO MINS]	0.004341		
14	End Office Measurement - Interoffice Set up [MEAS MSGS]	0.000086		
15	Tandem Switching - Interoffice Set up [TANDEM MSGS]		0.005211	0.001680
16	Tandem Switching - Interoffice Conversation Minute [TANDEM MINS]	0.006514		
17	MDF OSP	29.720000		
18				
19	**Investments From Switching Module**	**With SS7**		
20	SM USAGE	**SCM_Usage**		
21	IAO MSGS TSLRI	0.00584		
22	IAO MSGS SHARED	0.000878		
23	IAO MINS TSLRI	0.004618		
24	IAO MINS SHARED	0.000667		
25	IEO MSGS TSLRI	0.0076		
26	IEO MSGS SHARED	0.007323		
27	IEO MINS TSLRI	0.003663		
28	IEO MINS SHARED	0.000678		
29	IEO ORIG MSGS TSLRI	0.00751		
30	IEO ORIG MSGS SHARED	0.007583		
31	IEO ORIG MINS TSLRI	0.003663		
32	IEO ORIG MINS SHARED	0.000678		
33	IEO TERM MSGS TSLRI	0.007689		
34	IEO TERM MSGS SHARED	0.007064		
35	IEO TERM MINS TSLRI	0.003663		
36	IEO TERM MINS SHARED	0.000678		
37	MEAS MSGS TSLRI	0.000015		
38	MEAS MSGS SHARED	0.000071		
39	MEAS MINS TSLRI	0		
40	MEAS MINS SHARED	0		
41	TANDEM MSGS TSLRI	0.002957		
42	TANDEM MSGS SHARED	0.002254		
43	TANDEM MINS TSLRI	0.006514		
44	TANDEM MINS SHARED	0		
45	Percent IAO MOU (%)	61.26		
46	Investment Weightings (%) Day 8am - 5pm	84.34		
47	Investment Weightings (%) Evening/Night 5pm - 8am	15.66		
48	Usage Weightings (%) Day 8am - 5pm	58.76		
49	Usage Weightings (%) Evening/Night 5pm - 8am	41.24		
50	MDF COE Pair TSLRI	3.32		
51	MDF COE Pair SHARED	0.03		
52	**Without SS7**			
53	IEO MSGS TSLRI	0.004573		
54	IEO MSGS SHARED	0.000739		
55	IEO ORIG MSGS TSLRI	0.004401		
56	IEO ORIG MSGS SHARED	0.00082		
57	IEO TERM MSGS TSLRI	0.004745		
58	IEO TERM MSGS SHARED	0.000659		
59	TANDEM MSGS TSLRI	0.00168		
60	TANDEM MSGS SHARED	0		
61	**MDF**			
62	MDF OSP Pair TSLRI	27.75		
63	MDF OSP Pair SHARED	1.97		
64				
65				
66	NTS COE TSLRI	62.99		
67	NTS COE Shared	7.89		

Cell: A6
Comment: Total TSLRI and Shared IAO MSGS investments.

Cell: A7
Comment: Total TSLRI and Shared IAO MINS investments.

Cell: A8
Comment: Total TSLRI and Shared IEO ORIG MSGS investments.

Cell: A9
Comment: Total TSLRI and Shared IEO ORIG MINS investments.

Cell: A10
Comment: Total TSLRI and Shared IEO TERM MSGS investments.

Cell: A11
Comment: Total TSLRI and Shared IEO TERM MINS investments.

Cell: A12
Comment: Total TSLRI and Shared IEO MSGS investments.

Cell: A13
Comment: Total TSLRI and Shared IEO MINS investments.

Cell: A14
Comment: Total TSLRI and Shared MEAS MSGS investments.

Cell: A15
Comment: Total TSLRI and Shared TANDEM MSGS investments.

Cell: A16
Comment: Total TSLRI and Shared TANDEM MINS investments.

Cell: A17
Comment: Total TSLRI and Shared MDF OSP investments.

Mileage Band	Type of cost	Fixed or DISTANCE SENSITIVE	FRC	TOTAL DIRECT	NETWORK SUPPORT	Total Investment
OVER 0 TO 8	CONVERSATION MINUTE	FIXED	357C	0.00065716	0.00000207	0.00065922
OVER 0 TO 8	CONVERSATION MINUTE	FIXED	357CS	0.00025964	0.00000000	0.00025964
OVER 0 TO 8	CONVERSATION MINUTE	DISTANCE SENSITIVE	357C	0.00000141	0.00000000	0.00000141
OVER 0 TO 8	CONVERSATION MINUTE	DISTANCE SENSITIVE	357CS	0.00007451	0.00000000	0.00007451
OVER 0 TO 8	CONVERSATION MINUTE	DISTANCE SENSITIVE	845C	0.00014388	0.00000000	0.00014388
OVER 0 TO 8	CONVERSATION MINUTE	DISTANCE SENSITIVE	4C	0.00000620	0.00000306	0.00000926
OVER 0 TO 8	CONVERSATION MINUTE	DISTANCE SENSITIVE	85C	0.00009675	0.00004765	0.00014440
OVER 0 TO 8	SETUP TIME	FIXED	357C	0.00014819	0.00000047	0.00014865
OVER 0 TO 8	SETUP TIME	FIXED	357CS	0.00005855	0.00000000	0.00005855
OVER 0 TO 8	SETUP TIME	DISTANCE SENSITIVE	357C	0.00000032	0.00000000	0.00000032
OVER 0 TO 8	SETUP TIME	DISTANCE SENSITIVE	357CS	0.00001680	0.00000000	0.00001680
OVER 0 TO 8	SETUP TIME	DISTANCE SENSITIVE	4C	0.00003244	0.00000000	0.00003244
OVER 0 TO 8	SETUP TIME	DISTANCE SENSITIVE	845C	0.00000140	0.00000069	0.00000209
OVER 0 TO 8	SETUP TIME	DISTANCE SENSITIVE	85C	0.00002182	0.00001075	0.00003256
OVER 8 TO 25	CONVERSATION MINUTE	FIXED	357C	0.00065917	0.00000306	0.00066223
OVER 8 TO 25	CONVERSATION MINUTE	FIXED	357CS	0.00032690	0.00000000	0.00032690
OVER 8 TO 25	CONVERSATION MINUTE	DISTANCE SENSITIVE	357C	0.00000054	0.00000001	0.00000055
OVER 8 TO 25	CONVERSATION MINUTE	DISTANCE SENSITIVE	357CS	0.00003104	0.00000000	0.00003104
OVER 8 TO 25	CONVERSATION MINUTE	DISTANCE SENSITIVE	4C	0.00006579	0.00000000	0.00006579
OVER 8 TO 25	CONVERSATION MINUTE	DISTANCE SENSITIVE	845C	0.00001280	0.00000630	0.00001910
OVER 8 TO 25	CONVERSATION MINUTE	DISTANCE SENSITIVE	85C	0.00004424	0.00002179	0.00006602
OVER 8 TO 25	SETUP TIME	FIXED	357C	0.00014864	0.00000069	0.00014933
OVER 8 TO 25	SETUP TIME	FIXED	357CS	0.00007372	0.00000000	0.00007372
OVER 8 TO 25	SETUP TIME	DISTANCE SENSITIVE	357C	0.00000012	0.00000000	0.00000012
OVER 8 TO 25	SETUP TIME	DISTANCE SENSITIVE	357CS	0.00000700	0.00000000	0.00000700
OVER 8 TO 25	SETUP TIME	DISTANCE SENSITIVE	4C	0.00001483	0.00000000	0.00001483
OVER 8 TO 25	SETUP TIME	DISTANCE SENSITIVE	845C	0.00000289	0.00000142	0.00000431
OVER 8 TO 25	SETUP TIME	DISTANCE SENSITIVE	85C	0.00000998	0.00000491	0.00001489
OVER 25 TO 50	CONVERSATION MINUTE	FIXED	357C	0.00065917	0.00000306	0.00066223
OVER 25 TO 50	CONVERSATION MINUTE	FIXED	357CS	0.00032291	0.00000000	0.00032291
OVER 25 TO 50	CONVERSATION MINUTE	DISTANCE SENSITIVE	357C	0.00000033	0.00000005	0.00000038
OVER 25 TO 50	CONVERSATION MINUTE	DISTANCE SENSITIVE	357CS	0.00001717	0.00000000	0.00001717
OVER 25 TO 50	CONVERSATION MINUTE	DISTANCE SENSITIVE	4C	0.00002884	0.00000000	0.00002884
OVER 25 TO 50	CONVERSATION MINUTE	DISTANCE SENSITIVE	845C	0.00001533	0.00000755	0.00002288
OVER 25 TO 50	CONVERSATION MINUTE	DISTANCE SENSITIVE	85C	0.00001940	0.00000955	0.00002895
OVER 25 TO 50	SETUP TIME	FIXED	357C	0.00014864	0.00000069	0.00014933
OVER 25 TO 50	SETUP TIME	FIXED	357CS	0.00007282	0.00000000	0.00007282
OVER 25 TO 50	SETUP TIME	DISTANCE SENSITIVE	357C	0.00000007	0.00000001	0.00000009
OVER 25 TO 50	SETUP TIME	DISTANCE SENSITIVE	357CS	0.00000387	0.00000000	0.00000387
OVER 25 TO 50	SETUP TIME	DISTANCE SENSITIVE	4C	0.00000650	0.00000000	0.00000650
OVER 25 TO 50	SETUP TIME	DISTANCE SENSITIVE	845C	0.00000346	0.00000170	0.00000516
OVER 25 TO 50	SETUP TIME	DISTANCE SENSITIVE	85C	0.00000437	0.00000215	0.00000653
OVER 50	CONVERSATION MINUTE	FIXED	357C	0.00065646	0.00000173	0.00065819
OVER 50	CONVERSATION MINUTE	FIXED	357CS	0.00023937	0.00000000	0.00023937
OVER 50	CONVERSATION MINUTE	DISTANCE SENSITIVE	357C	0.00000042	0.00000017	0.00000059
OVER 50	CONVERSATION MINUTE	DISTANCE SENSITIVE	357CS	0.00000597	0.00000000	0.00000597
OVER 50	CONVERSATION MINUTE	DISTANCE SENSITIVE	4C	0.00000892	0.00000000	0.00000892
OVER 50	CONVERSATION MINUTE	DISTANCE SENSITIVE	845C	0.00000177	0.00000087	0.00000264
OVER 50	CONVERSATION MINUTE	DISTANCE SENSITIVE	85C	0.00000600	0.00000296	0.00000896
OVER 50	SETUP TIME	FIXED	357C	0.00014803	0.00000039	0.00014842
OVER 50	SETUP TIME	FIXED	357CS	0.00005398	0.00000000	0.00005398
OVER 50	SETUP TIME	DISTANCE SENSITIVE	357C	0.00000009	0.00000004	0.00000013
OVER 50	SETUP TIME	DISTANCE SENSITIVE	357CS	0.00000135	0.00000000	0.00000135
OVER 50	SETUP TIME	DISTANCE SENSITIVE	4C	0.00000201	0.00000000	0.00000201
OVER 50	SETUP TIME	DISTANCE SENSITIVE	845C	0.00000040	0.00000020	0.00000060
OVER 50	SETUP TIME	DISTANCE SENSITIVE	85C	0.00000135	0.00000067	0.00000202
All	CONVERSATION MINUTE	FIXED	357C	0.00065746	0.00000222	0.00065967
All	CONVERSATION MINUTE	FIXED	357CS	0.00027027	0.00000000	0.00027027
All	CONVERSATION MINUTE	DISTANCE SENSITIVE	357C	0.00000059	0.00000010	0.00000069
All	CONVERSATION MINUTE	DISTANCE SENSITIVE	357CS	0.00002320	0.00000000	0.00002320
All	CONVERSATION MINUTE	DISTANCE SENSITIVE	4C	0.00004319	0.00000000	0.00004319
All	CONVERSATION MINUTE	DISTANCE SENSITIVE	845C	0.00000665	0.00000327	0.00000992
All	CONVERSATION MINUTE	DISTANCE SENSITIVE	85C	0.00002904	0.00001430	0.00004335
All	SETUP TIME	FIXED	357C	0.00014826	0.00000050	0.00014876
All	SETUP TIME	FIXED	357CS	0.00006095	0.00000000	0.00006095
All	SETUP TIME	DISTANCE SENSITIVE	357C	0.00000013	0.00000002	0.00000015
All	SETUP TIME	DISTANCE SENSITIVE	357CS	0.00000523	0.00000000	0.00000523
All	SETUP TIME	DISTANCE SENSITIVE	4C	0.00000974	0.00000000	0.00000974
All	SETUP TIME	DISTANCE SENSITIVE	845C	0.00000150	0.00000074	0.00000224
All	SETUP TIME	DISTANCE SENSITIVE	85C	0.00000655	0.00000323	0.00000977

These are investments outputs from the Transport Module.

Section D - Local Traffic
Hold Times

STATE	ORIG & TERM LOCAL MOU	NCTR	ORIG & TERM CONV MOU	O : T	ORIG CONV MOU	LOCAL ATTS	FDO RATIO	FULLY DIALED ATTS	COMP RATIO	COMP LOCAL MSGS	LOCAL ALOC
A	B	C	D=B*(1-C)	E	F=D*E	G	H	I=G*H	J	K=I*J	L=F/K
South Dakota	3,603,780,127	0.1338	3,121,559,389	0.5	1,560,779,695	786,314,452	0.9471	744,709,139	0.83	618,108,585	2.53

Section D - Local Traffic
Hold Times

Cell: B2
Comment: Data comes from Separations Office Sample from January - December 1998

Cell: C2
Comment: NCTR is the Non-Conversation Time Ratio which is used to remove minutes of use that occur during dialing and set up.

Cell: E2
Comment: O:T is the ratio of originating to terminating MOUs

Cell: H2
Comment: FDO ratio is used to remove abandoned call attempts that are not completely dialed

Cell: J2
Comment: Completion Ratio is used to remove call attempts that are not completed because the other end never went off hook; such as busy line and no answer.

Section E - Entrance Facilities and Direct Trunked Transport
DS1 - Develop Total Prod Costs

Row	Qwest Defaults 7/20/01 10:04:18 AM South Dakota	Source or Calculation	Factor Value [AP p1 cB]	DS1 DS1 Entrance Facility	Multiplexing DS1 to DS0	Over 0 to 8 Miles, Fixed	Over 0 to 8 Miles, Per Air Mile	Over 8 to 25 Miles, Fixed	Over 8 to 25 Miles, Per Air Mile	Over 25 to 50 Miles, Fixed	Over 25 to 50 Miles, Per Air Mile	Over 50 Miles, Fixed	Over 50 Miles, Per Air Mile
			A	B	C	D	E	F	G	H	I	J	K
1	**Investment**	sE p9-11 cD Total		4320.07	11204.03	1587.92	199.66	1624.20	202.47	1705.48	112.57	1646.35	47.87
2													
3	Investment Based Costs (IBC)	sE p9-11 cJ Total		67.20570	178.41309	27.91732	2.67942	28.55444	2.66791	29.98161	1.50179	28.94333	0.64625
4	Element Specific Expenses	AP p3 F41*r3		0.28925	0.76789	0.12016	0.01153	0.12290	0.01148	0.12904	0.00646	0.12457	0.00278
5	***Total IBC + Element Specific Expenses***	***r3 + r4***		67.49495	179.18098	28.03747	2.69095	28.67734	2.67939	30.11066	1.50826	29.06790	0.64904
6													
7	***Directly Assigned***												
8	Product Management Expense	cA*r5	0.02557	1.72552	4.58080	0.71678	0.06879	0.73314	0.06850	0.76979	0.03856	0.74313	0.01659
9	Sales Expense	cA*r5	0.00922	0.62261	1.65287	0.25863	0.02482	0.26454	0.02472	0.27776	0.01391	0.26814	0.00599
10	Product Advertising Expense	cA*r5	0.00000	0.00000	0.00000	0.00000	0.00000	0.00000	0.00000	0.00000	0.00000	0.00000	0.00000
11	Business Fees (Other Operating Taxes)	cA*(r5+r8:r10)	0.00203	0.14144	0.37549	0.05875	0.00564	0.06010	0.00561	0.06310	0.00316	0.06091	0.00136
12	***Directly Assigned Costs***	***Sum r8:r11***		2.48958	6.60916	1.03417	0.09926	1.05777	0.09883	1.11064	0.05563	1.07218	0.02394
13													
14	***Total Direct***	***r5 + r12***		69.98453	185.79014	29.07165	2.79020	29.73511	2.77822	31.22130	1.56389	30.14008	0.67298
15													
16	***Directly Attributed***												
17	Network Operations	cA*r14	0.04088	2.86097	7.59512	1.18845	0.11406	1.21557	0.11357	1.27633	0.06393	1.23213	0.02751
18	Network Support Assets	cA*r14	0.01536	1.07524	2.85448	0.44666	0.04287	0.45685	0.04268	0.47968	0.02403	0.46307	0.01034
19	General Support Assets	cA*r14	0.06951	4.86446	12.91383	2.02070	0.19394	2.06682	0.19311	2.17012	0.10870	2.09497	0.04678
20	General Purpose Computers	cA*r14	0.03471	2.42944	6.44950	1.00919	0.09686	1.03222	0.09644	1.08381	0.05429	1.04628	0.02336
21	Uncollectible - Interconnect	cA*r14	0.00040	0.02805	0.07447	0.01165	0.00112	0.01192	0.00111	0.01251	0.00063	0.01208	0.00027
22	Accounting and Finance Expense	cA*r14	0.00884	0.61858	1.64215	0.25696	0.02466	0.26282	0.02456	0.27596	0.01382	0.26640	0.00595
23	Human Resources Expense	cA*r14	0.00814	0.57000	1.51320	0.23678	0.02273	0.24218	0.02263	0.25429	0.01274	0.24548	0.00548
24	Information Management Expense	cA*r14	0.05701	3.98978	10.59179	1.65736	0.15907	1.69518	0.15838	1.77991	0.08916	1.71827	0.03837
25	Intangibles	cA*r14	0.00209	0.14635	0.38852	0.06079	0.00583	0.06218	0.00581	0.06529	0.00327	0.06303	0.00141
26	***Total Directly Attributed Costs***	***Sum r17:r25***		16.58287	44.02307	6.88854	0.66114	7.04575	0.65830	7.39790	0.37056	7.14171	0.15946
27													
28	***Total Element Long Run Incremental Costs***	***r 14 + r26***		86.56740	229.81321	35.96019	3.45135	36.78086	3.43652	38.61920	1.93446	37.28179	0.83244
29													
30	***Common***												
31	Executive Expense	cA*r28	0.00780	0.67565	1.79367	0.28067	0.02694	0.28707	0.02682	0.30142	0.01510	0.29098	0.00650
32	Planning Expense	cA*r28	0.00058	0.05022	0.13332	0.02086	0.00200	0.02134	0.00199	0.02240	0.00112	0.02163	0.00048
33	External Relations Expense	cA*r28	0.01303	1.12789	2.99423	0.46852	0.04497	0.47922	0.04477	0.50317	0.02520	0.48574	0.01085
34	Legal Expense	cA*r28	0.00615	0.53224	1.41296	0.22109	0.02122	0.22614	0.02113	0.23744	0.01189	0.22922	0.00512
35	Other Procurement Expense	cA*r28	0.00236	0.20424	0.54220	0.08484	0.00814	0.08678	0.00811	0.09111	0.00456	0.08796	0.00196
36	Research and Development Expense	cA*r28	0.00004	0.00312	0.00828	0.00130	0.00012	0.00132	0.00012	0.00139	0.00007	0.00134	0.00003
37	Other General and Admin Exp	cA*r28	0.01521	1.31683	3.49583	0.54701	0.05250	0.55950	0.05228	0.58746	0.02943	0.56712	0.01266
38	***Total Common Costs***	***Sum r31:r37***		3.91019	10.38049	1.62430	0.15589	1.66136	0.15523	1.74440	0.08738	1.68399	0.03760
39													
40	***TELRIC + Common***	***r27 + r38***		**90.48**	**240.19**	**37.58**	**3.61**	**38.44**	**3.59**	**40.36**	**2.02**	**38.97**	**0.87**

c = column, r = row, s = section, p = page, AP = Appendix

Section E - Entrance Facilities and Direct Trunked Transport
DS3 - Develop Total Prod Costs

Row	Qwest Defaults 7/20/01 10:04:18 AM South Dakota	Source or Calculation	Factor Value [AP p1 cB]	DS3 DS3 Entrance Facility	Multiplexing DS3 to DS1	Over 0 to 8 Miles, Fixed	Over 0 to 8 Miles, Per Air Mile	Over 8 to 25 Miles, Fixed	Over 8 to 25 Miles, Per Air Mile	Over 25 to 50 Miles, Fixed	Over 25 to 50 Miles, Per Air Mile	Over 50 Miles, Fixed	Over 50 Miles, Pe Air Mile
			A	B	C	D	E	F	G	H	I	J	K
1	**Investment**	sE p12-14 cD Total		$22,826.04	$11,892.42	$10,410.29	$3,386.25	$10,559.58	$1,146.15	$9,767.73	$1,312.41	$10,280.58	$893.2
2													
3	Investment Based Costs (IBC)	sE p12-14 cJ Total		352.2965	189.3750	182.8359	45.2790	185.4574	14.0891	171.5536	17.7761	180.5586	12.242
4	Element Specific Expenses	AP p3 F41*r3		1.5163	0.8151	0.7869	0.1949	0.7982	0.0606	0.7384	0.0765	0.7771	0.052
5	***Total IBC + Element Specific Expenses***	*r3 + r4*		353.8128	190.1901	183.6228	45.4739	186.2556	14.1497	172.2920	17.8526	181.3357	12.295
6													
7	***Directly Assigned***												
8	Product Management Expense	cA*r5	0.02557	9.0453	4.8622	4.6944	1.1625	4.7617	0.3617	4.4047	0.4564	4.6359	0.314
9	Sales Expense	cA*r5	0.00922	3.2638	1.7544	1.6938	0.4195	1.7181	0.1305	1.5893	0.1647	1.6727	0.113
10	Product Advertising Expense	cA*r5	0.00000	0.0000	0.0000	0.0000	0.0000	0.0000	0.0000	0.0000	0.0000	0.0000	0.000
11	Business Fees (Other Operating Taxes)	cA*(r5+r8:r10)	0.00203	0.7414	0.3986	0.3848	0.0953	0.3903	0.0297	0.3611	0.0374	0.3800	0.025
12	***Directly Assigned Costs***	*Sum r8:r11*		13.0505	7.0152	6.7730	1.6773	6.8701	0.5219	6.3551	0.6585	6.6886	0.453
13													
14	***Total Direct***	*r5 + r12*		366.8633	197.2053	190.3958	47.1512	193.1257	14.6716	178.6470	18.5111	188.0243	12.748
15													
16	***Directly Attributed***												
17	Network Operations	cA*r14	0.04088	14.9974	8.0618	7.7834	1.9275	7.8950	0.5998	7.3031	0.7567	7.6865	0.521
18	Network Support Assets	cA*r14	0.01536	5.6365	3.0299	2.9252	0.7244	2.9672	0.2254	2.7447	0.2844	2.8888	0.195
19	General Support Assets	cA*r14	0.06951	25.4998	13.7073	13.2340	3.2774	13.4237	1.0198	12.4173	1.2867	13.0691	0.886
20	General Purpose Computers	cA*r14	0.03471	12.7353	6.8458	6.6094	1.6368	6.7042	0.5093	6.2015	0.6426	6.5271	0.442
21	Uncollectible - Interconnect	cA*r14	0.00040	0.1471	0.0790	0.0763	0.0189	0.0774	0.0059	0.0716	0.0074	0.0754	0.005
22	Accounting and Finance Expense	cA*r14	0.00884	3.2426	1.7431	1.6829	0.4168	1.7070	0.1297	1.5790	0.1636	1.6619	0.112
23	Human Resources Expense	cA*r14	0.00814	2.9880	1.6062	1.5507	0.3840	1.5729	0.1195	1.4550	0.1508	1.5314	0.103
24	Information Management Expense	cA*r14	0.05701	20.9147	11.2426	10.8544	2.6881	11.0100	0.8364	10.1846	1.0553	10.7192	0.726
25	Intangibles	cA*r14	0.00209	0.7672	0.4124	0.3981	0.0986	0.4039	0.0307	0.3736	0.0387	0.3932	0.026
26	***Total Directly Attributed Costs***	*Sum r17:r25*		86.9284	46.7279	45.1144	11.1725	45.7612	3.4764	42.3305	4.3862	44.5525	3.020
27													
28	***Total Element Long Run Incremental Costs***	*r14 + r26*		453.7917	243.9332	235.5102	58.3237	238.8869	18.1481	220.9775	22.8973	232.5768	15.769
29													
30	***Common***												
31	Executive Expense	cA*r28	0.00780	3.5418	1.9039	1.8381	0.4552	1.8645	0.1416	1.7247	0.1787	1.8152	0.123
32	Planning Expense	cA*r28	0.00058	0.2633	0.1415	0.1366	0.0338	0.1386	0.0105	0.1282	0.0133	0.1349	0.009
33	External Relations Expense	cA*r28	0.01303	5.9124	3.1782	3.0685	0.7599	3.1125	0.2365	2.8791	0.2983	3.0302	0.205
34	Legal Expense	cA*r28	0.00615	2.7901	1.4998	1.4480	0.3586	1.4688	0.1116	1.3586	0.1408	1.4300	0.097
35	Other Procurement Expense	cA*r28	0.00236	1.0706	0.5755	0.5556	0.1376	0.5636	0.0428	0.5214	0.0540	0.5487	0.037
36	Research and Development Expense	cA*r28	0.00004	0.0163	0.0088	0.0085	0.0021	0.0086	0.0007	0.0080	0.0008	0.0084	0.000
37	Other General and Admin Exp	cA*r28	0.01521	6.9029	3.7106	3.5825	0.8872	3.6339	0.2761	3.3614	0.3483	3.5379	0.239
38	***Total Common Costs***	*Sum r31:r37*		20.4974	11.0183	10.6378	2.6344	10.7903	0.8197	9.9814	1.0343	10.5053	0.712
39													
40	***TELRIC + Common***	*r27 + r38*		$474.29	$254.95	$246.15	$60.96	$249.68	$18.97	$230.96	$23.93	$243.08	$16.4

c = column, r = row, s = section, p = page, AP = Appendix

Section E - Entrance Facilities and Direct Trunked Transport
DS1-Investment Cost Calculation

	A	B	C	D	E	F	G	H	I	J
1	Qwest Defaults 7/20/01 10:04:18 AM						DS1			
2	South Dakota			Investment	Depreciation	Cost of Money	Income Tax	Ad Valorem	Maintenance	Total Capital Costs
3	Acct	FRC	Account Name		cD*(AP p7 cA)/12	cD*(AP p7 cB)/12	cD*(AP p7 cC)/12	cD*(AP p7 cD)/12	cD*(AP p7 cE)/12	sum(cE:cI)
4	**DS1 Entrance Facility**									
5	2111	20C	Land	2.040668	0.000000	0.016411	0.006206	0.001465	0.003801	0.027884
6	2121	110C	Building	78.128426	0.168112	0.487450	0.184336	0.056075	0.145537	1.041509
7	2232.3	357C	Other Digital Equipment	274.718591	2.511783	1.040601	0.393517	0.197172	0.753147	4.896221
8	2232.2	257C	Pair Gain—Digital	673.324371	6.156281	2.550471	0.964495	0.483262	0.663236	10.817745
9	2232.2	257CP	Pair Gain—Digital	791.255227	7.234536	2.997179	1.133424	0.567904	0.779400	12.712443
10	2232.2	257CS	Pair Gain—Digital	509.576933	4.659120	1.930215	0.729937	0.365736	0.484950	8.169958
11	2232.2	257CSP	Pair Gain—Digital	676.480558	6.185139	2.562426	0.969016	0.485527	0.643787	10.845895
12	2411	1C	Poles	6.245561	0.063794	0.019202	0.007261	0.004483	0.016894	0.111634
13	2431	3C	Aerial Wire	0.304966	0.006963	0.002330	0.000881	0.000219	0.000254	0.010648
14	2421.11,.21	52C	Aerial Cbl Metallic	11.823426	0.103653	0.053576	0.020261	0.008486	0.129576	0.315552
15	2421.11	42C	Aerial Drop	4.215802	0.036959	0.019103	0.007224	0.003026	0.046202	0.112514
16	2422.11,.21	5C	UG Cbl Metallic	109.094906	0.827185	0.510951	0.193223	0.078300	0.219579	1.829237
17	2422.12,.22	85C	UG Cbl Nonmetallic	93.374915	0.550459	0.440087	0.166425	0.067017	0.055226	1.279216
18	2423.11,.21	45C	Buried Cbl Metallic	330.954903	1.679662	1.573676	0.595107	0.237535	1.316014	5.401993
19	2423.11	35C	Buried Drop	23.837323	0.120979	0.113345	0.042863	0.017109	0.094787	0.389083
20	2423.12,.22	845C	Buried Cbl Nonmetallic	459.633768	2.332733	2.185538	0.826491	0.329891	0.431404	6.106057
21	2426.1	62C	Intrabuilding Cbl., Exch., Metallic	65.277752	0.341034	0.317531	0.120079	0.046851	0.126689	0.952183
22	2426.2	862C	Intrabuilding Cbl., Exch., Nonmetallic	2.426660	0.012678	0.011804	0.004464	0.001742	0.001399	0.032087
23	2441	4C	Conduit System	207.360056	0.370536	1.116291	0.422141	0.148827	0.096045	2.153839
24			**Total**	**4320.074812**	**33.361606**	**17.948186**	**6.787352**	**3.100625**	**6.007929**	**67.205698**
25	**MULTIPLEXING DS1 TO DSO**									
26	2111	20C	Land	14.867909	0.000000	0.119571	0.045217	0.010671	0.027696	0.203155
27	2121	110C	Building	569.228527	1.224831	3.551463	1.343034	0.408549	1.060352	7.588229
28	2232.3	257C	Other Digital Equipment	10619.935206	97.099273	40.227022	15.212398	7.622192	10.460823	170.621709
29			**Total**	**11204.031643**	**98.324104**	**43.898056**	**16.600650**	**8.041412**	**11.548871**	**178.413093**
30										
31	**DS1 DIRECT TRUNKED TRANSPORT**									
32	**OVER 0 TO 8**		**FIXED**							
33		20C	Land	2.107190	0.000000	0.016946	0.006409	0.001512	0.003925	0.028793
34		110C	Building	80.675260	0.173592	0.503339	0.190345	0.057903	0.150281	1.075460
35		357CS	Other Digital Equipment	374.241686	3.421734	1.417582	0.536078	0.268603	1.013513	6.657509
36		357C	Other Digital Equipment	1130.893764	10.339890	4.283688	1.619935	0.811671	3.100371	20.155555
37			**Total**	**1587.917899**	**13.935216**	**6.221556**	**2.352766**	**1.139688**	**4.268090**	**27.917317**
38	**OVER 0 TO 8**		**VARIABLE**							
39		20C	Land	0.065913	0.000000	0.000530	0.000200	0.000047	0.000123	0.000901
40		110C	Building	2.523544	0.005430	0.015745	0.005954	0.001811	0.004701	0.033641
41		85C	UG Cbl Nonmetallic	74.942924	0.441800	0.353215	0.133573	0.053788	0.044325	1.026701
42		357C	Other Digital Equipment	2.892953	0.026451	0.010958	0.004144	0.002076	0.007931	0.051560
43		357CS	Other Digital Equipment	44.188083	0.404017	0.167379	0.063297	0.031715	0.119669	0.786076
44		4C	Conduit System	74.671309	0.133432	0.401981	0.152015	0.053593	0.034586	0.775607
45		845C	Buried Cbl Nonmetallic	0.371036	0.001883	0.001764	0.000667	0.000266	0.000348	0.004929
46			**Total**	**199.655762**	**1.013012**	**0.951573**	**0.359850**	**0.143298**	**0.211683**	**2.679416**

Section E - Entrance Facilities and Direct Trunked Transport
DS1-Investment Cost Calculation

	A	B	C	D	E	F	G	H	I	J
1	Qwest Defaults 7/20/01 10:04:18 AM						DS1			
2	South Dakota			Investment	Depreciation	Cost of Money	Income Tax	Ad Valorem	Maintenance	Total Capital Costs
3	Acct	FRC	Account Name		cD*(AP p7 cA)/12	cD*(AP p7 cB)/12	cD*(AP p7 cC)/12	cD*(AP p7 cD)/12	cD*(AP p7 cE)/12	sum(cE:cI)
47	OVER 8 TO 25		FIXED							
48		20C	Land	2.155341	0.000000	0.017334	0.006555	0.001547	0.004015	0.029451
49		110C	Building	82.518768	0.177559	0.514841	0.194694	0.059226	0.153715	1.100035
50		357CS	Other Digital Equipment	407.176236	3.722859	1.542334	0.583255	0.292241	1.102705	7.243393
51		357C	Other Digital Equipment	1132.353015	10.353232	4.289215	1.622025	0.812718	3.104372	20.181563
52			Total	1624.203360	14.253649	6.363724	2.406529	1.165731	4.364807	28.554441
53	OVER 8 TO 25		VARIABLE							
54		20C	Land	0.060661	0.000000	0.000488	0.000184	0.000044	0.000113	0.000829
55		110C	Building	2.322446	0.004997	0.014490	0.005480	0.001667	0.004326	0.030960
56		85C	UG Cbl Nonmetallic	75.779031	0.446729	0.357156	0.135063	0.054388	0.044819	1.038156
57		357C	Other Digital Equipment	1.752055	0.016019	0.006637	0.002510	0.001257	0.004803	0.031226
58		357CS	Other Digital Equipment	41.577153	0.380145	0.157489	0.059557		0.112598	0.709789
59		4C	Conduit System	75.504385	0.134920	0.406466	0.153711	0.054191	0.034972	0.784261
60		845C	Buried Cbl Nonmetallic	5.471353	0.027768	0.026016	0.009838	0.003927	0.005135	0.072685
61			Total	202.467084	1.010578	0.968741	0.366343	0.115475	0.206768	2.667905
62	OVER 25 TO 50		FIXED							
63		20C	Land	2.263201	0.000000	0.018201	0.006883	0.001624	0.004216	0.030924
64		110C	Building	86.648269	0.186444	0.540606	0.204437	0.062190	0.161407	1.155084
65		357CS	Other Digital Equipment	480.975443	4.397613	1.821876	0.688967	0.345208	1.302566	8.556232
66		357C	Other Digital Equipment	1135.596744	10.382890	4.301502	1.626672	0.815046	3.113264	20.239374
67			Total	1705.483658	14.966947	6.682185	2.526960	1.224068	4.581454	29.981615
68	OVER 25 TO 50		VARIABLE							
69		20C	Land	0.031039	0.000000	0.000250	0.000094	0.000022	0.000058	0.000424
70		110C	Building	1.188340	0.002557	0.007414	0.002804	0.000853	0.002214	0.015841
71		85C	UG Cbl Nonmetallic	37.892384	0.223381	0.178591	0.067537	0.027196	0.022411	0.519117
72		357C	Other Digital Equipment	0.551400	0.005042	0.002089	0.000790	0.000396	0.001512	0.009827
73		357CS	Other Digital Equipment	21.619121	0.197666	0.081891	0.030968	0.015517	0.058548	0.384590
74		4C	Conduit System	37.755051	0.067465	0.203248	0.076861	0.027098	0.017487	0.392160
75		845C	Buried Cbl Nonmetallic	13.537070	0.068703	0.064368	0.024342	0.009716	0.012706	0.179835
76			Total	112.574404	0.564814	0.537851	0.203396	0.080797	0.114936	1.501795
77	OVER 50		FIXED							
78		20C	Land	2.184732	0.000000	0.017570	0.006644	0.001568	0.004070	0.029852
79		110C	Building	83.644027	0.179980	0.521862	0.197349	0.060033	0.155811	1.115036
80		357CS	Other Digital Equipment	427.499011	3.908672	1.619314	0.612366	0.306827	1.157743	7.604922
81		357C	Other Digital Equipment	1133.023885	10.359366	4.291757	1.622986	0.813199	3.106211	20.193519
82			Total	1646.351655	14.448018	6.450503	2.439346	1.181628	4.423834	28.943329

Section E - Entrance Facilities and Direct Trunked Transport
DS1-Investment Cost Calculation

	A	B	C	D	E	F	G	H	I	J
1	Qwest Defaults 7/20/01 10:04:18 AM						DS1			
2	South Dakota			Investment	Depreciation	Cost of Money	Income Tax	Ad Valorem	Maintenance	Total Capital Costs
3	Acct	FRC	Account Name		cD*(AP p7 cA)/12	cD*(AP p7 cB)/12	cD*(AP p7 cC)/12	cD*(AP p7 cD)/12	cD*(AP p7 cE)/12	sum(cE:cI)
83	OVER 50		VARIABLE							
84		20C	Land	0.016158	0.000000	0.000130	0.000049	0.000012	0.000030	0.000221
85		110C	Building	0.618615	0.001331	0.003860	0.001460	0.000444	0.001152	0.008247
86		85C	UG Cbl Nonmetallic	16.902107	0.099640	0.079662	0.030125	0.012131	0.009997	0.231555
87		357C	Other Digital Equipment	1.430846	0.013082	0.005420	0.002050	0.001027	0.003923	0.025501
88		357CS	Other Digital Equipment	10.110479	0.092441	0.038297	0.014483	0.007257	0.027381	0.179859
89		4C	Conduit System	16.840849	0.030093	0.090660	0.034284	0.012087	0.007800	0.174925
90		845C	Buried Cbl Nonmetallic	1.953097	0.009912	0.009287	0.003512	0.001402	0.001833	0.025946
91			Total	47.872151	0.246501	0.227315	0.085962	0.034359	0.052116	0.646254
92	Investment Sources									
93	Land= (AP p12 D10) * 377C + (AP p12 E10) * (57C+257C+357C+357CS)						Building = (AP p12 B10) * 377C + (AP p12 C10) * (57C+257C+357C+357CS)			
94	Entrance Facility and Mux = sE p15 cE									
95	Direct Trunk Transport = sE p18 cG									

	A	B	C	D	E	F	G	H	I	J
1	Qwest Defaults 7/20/01 10:04:18 AM						DS3			
2	South Dakota			Investment	Depreciation	Cost of Money	Income Tax	Ad Valorem	Maintenance	Total Capital Costs
3	Acct	FRC	Account Name		cD*(AP p7 cA)/12	cD*(AP p7 cB)/12	cD*(AP p7 cC)/12	cD*(AP p7 cD)/12	cD*(AP p7 cE)/12	sum(cE:cI)
4	DS3 Entrance Facility									
5	2111	20C	Land	10.3159	0.0000	0.0830	0.0314	0.0074	0.0192	0.1410
6	2121	110C	Building	394.9510	0.8498	2.4641	0.9318	0.2835	0.7357	5.2650
7	2232.3	357C	Other Digital Equipment	1677.6615	15.3390	6.3548	2.4031	1.2041	4.5993	29.9004
8	2232.2	257C	Pair Gain—Digital	158.7580	1.4515	0.6014	0.2274	0.1139	0.1564	2.5506
9	2232.2	257CS	Pair Gain—Digital	5532.0691	50.5803	20.9548	7.9243	3.9705	5.2647	88.6947
10	2232.2	257CP	Pair Gain—Digital	68.0246	0.6220	0.2577	0.0974	0.0488	0.0647	1.0906
11	2232.2	257CSP	Pair Gain—Digital	10406.3933	95.1468	39.4182	14.9065	7.4689	9.9035	166.8439
12	2411	1C	Poles	0.0000	0.0000	0.0000	0.0000	0.0000	0.0000	0.0000
13	2421.11,.21	52C	Aerial Cbl Metallic	0.0000	0.0000	0.0000	0.0000	0.0000	0.0000	0.0000
14	2421.11	42C	Aerial Drop	0.0000	0.0000	0.0000	0.0000	0.0000	0.0000	0.0000
15	2422.11,.21	5C	UG Cbl Metallic	0.0000	0.0000	0.0000	0.0000	0.0000	0.0000	0.0000
16	2422.12,.22	85C	UG Cbl Nonmetallic	859.4523	5.0666	4.0507	1.5318	0.6169	0.5083	11.7743
17	2423.11,.21	45C	Buried Cbl Metallic	0.0000	0.0000	0.0000	0.0000	0.0000	0.0000	0.0000
18	2423.11	35C	Buried Drop	0.0000	0.0000	0.0000	0.0000	0.0000	0.0000	0.0000
19	2423.12,.22	845C	Buried Cbl Nonmetallic	2532.2609	12.8517	12.0408	4.5534	1.8175	2.3767	33.6401
20	2426.1	62C	Intrabuilding Cbl., Exch., Metallic	0.0000	0.0000	0.0000	0.0000	0.0000	0.0000	0.0000
21	2426.2	862C	Intrabuilding Cbl., Exch., Nonmetallic	26.5720	0.1388	0.1293	0.0489	0.0191	0.0153	0.3514
22	2441	4C	Conduit System	1159.5814	2.0721	6.2424	2.3607	0.8323	0.5371	12.0445
23			Total	22826.0400	184.1188	92.5970	35.0168	16.3828	24.1810	352.2965
24	MULTIPLEXING DS3 TO DS1									
25	2111	20C	Land	15.7814	0.0000	0.1269	0.0480	0.0113	0.0294	0.2156
26	2121	110C	Building	604.2025	1.3001	3.7697	1.4256	0.4337	1.1255	8.0545
27	2232.3	257C	Other Digital Equipment	11272.4353	103.0652	42.6986	16.1471	8.0905	11.1035	181.1049
28			Total	11892.4193	104.3652	46.5952	17.6206	8.5355	12.2584	189.3750
29										
30	DS3 DIRECT TRUNKED TRANSPORT									
31	OVER 0 TO 8		FIXED							
32		20C	Land	13.8146	0.0000	0.1111	0.0420	0.0099	0.0257	0.1888
33		110C	Building	528.9017	1.1381	3.2999	1.2479	0.3796	0.9852	7.0506
34		357CS	Other Digital Equipment	8097.6407	74.0376	30.6729	11.5994	5.8119	21.9298	144.0516
35		357C	Other Digital Equipment	1769.9291	16.1827	6.7043	2.5353	1.2703	4.8523	31.5449
36			Total	10410.2861	91.3584	40.7881	15.4246	7.4717	27.7931	182.8359
37	OVER 0 TO 8		VARIABLE							
38		20C	Land	1.0799	0.0000	0.0087	0.0033	0.0008	0.0020	0.0148
39		110C	Building	41.3447	0.0890	0.2580	0.0975	0.0297	0.0770	0.5512
40		85C	UG Cbl Nonmetallic	1288.5704	7.5963	6.0732	2.2967	0.9248	0.7621	17.6531
41		357C	Other Digital Equipment	66.6379	0.6093	0.2524	0.0955	0.0478	0.1827	1.1877
42		357CS	Other Digital Equipment	704.7187	6.4433	2.6694	1.0095	0.5058	1.9085	12.5365
43		4C	Conduit System	1283.9003	2.2942	6.9117	2.6137	0.9215	0.5947	13.3358
44		845C	Buried Cbl Nonmetallic	0.0000	0.0000	0.0000	0.0000	0.0000	0.0000	0.0000
45			Total	3386.2519	17.0321	16.1733	6.1162	2.4304	3.5270	45.2790

	A	B	C	D	E	F	G	H	I	J
1	Qwest Defaults 7/20/01 10:04:18 AM						DS3			
2	South Dakota			Investment	Depreciation	Cost of Money	Income Tax	Ad Valorem	Maintenance	Total Capital Costs
3	Acct	FRC	Account Name		cD*(AP p7 cA)/12	cD*(AP p7 cB)/12	cD*(AP p7 cC)/12	cD*(AP p7 cD)/12	cD*(AP p7 cE)/12	sum(cE:cI)
46	OVER 8 TO 25		FIXED							
47		20C	Land	14.0127	0.0000	0.1127	0.0426	0.0101	0.0261	0.1915
48		110C	Building	536.4870	1.1544	3.3472	1.2658	0.3851	0.9994	7.1518
49		357CS	Other Digital Equipment	8233.1079	75.2762	31.1860	11.7934	5.9091	22.2967	146.4615
50		357C	Other Digital Equipment	1775.9774	16.2380	6.7272	2.5440	1.2747	4.8689	31.6527
51			Total	10559.5850	92.6686	41.3731	15.6458	7.5789	28.1911	185.4574
52	OVER 8 TO 25		VARIABLE							
53		20C	Land	0.2611	0.0000	0.0021	0.0008	0.0002	0.0005	0.0036
54		110C	Building	9.9958	0.0215	0.0624	0.0236	0.0072	0.0186	0.1333
55		85C	UG Cbl Nonmetallic	468.3466	2.7610	2.2074	0.8347	0.3361	0.2770	6.4162
56		357C	Other Digital Equipment	77.6258	0.7097	0.2940	0.1112	0.0557	0.2128	1.3835
57		357CS	Other Digital Equipment	108.8623	0.9953	0.4124	0.1559	0.0781	0.2948	1.9366
58		4C	Conduit System	466.6492	0.8339	2.5121	0.9500	0.3349	0.2161	4.8471
59		845C	Buried Cbl Nonmetallic	14.4129	0.0731	0.0685	0.0259	0.0103	0.0135	0.1915
60			Total	1146.1536	5.3946	5.5589	2.1022		1.0334	14.0891
61	OVER 25 TO 50		FIXED							
62		20C	Land	12.9619	0.0000	0.1042	0.0394	0.0093	0.0241	0.1771
63		110C	Building	496.2565	1.0678	3.0962	1.1709	0.3562	0.9244	6.6155
64		357CS	Other Digital Equipment	7512.2780	68.6856	28.4556	10.7609	5.3917	20.3446	133.6384
65		357C	Other Digital Equipment	1746.2380	15.9661	6.6145	2.5014	1.2533	4.7874	31.1226
66			Total	9767.7343	85.7195	38.2706	14.4725	7.0105	26.0805	171.5536
67	OVER 25 TO 50		VARIABLE							
68		20C	Land	0.4731	0.0000	0.0038	0.0014	0.0003	0.0009	0.0065
69		110C	Building	18.1124	0.0390	0.1130	0.0427	0.0130	0.0337	0.2415
70		85C	UG Cbl Nonmetallic	478.8215	2.8227	2.2567	0.8534	0.3437	0.2832	6.5597
71		357C	Other Digital Equipment	48.9415	0.4475	0.1854	0.0701	0.0351	0.1342	0.8723
72		357CS	Other Digital Equipment	288.9773	2.6422	1.0946	0.4139	0.2074	0.7826	5.1407
73		4C	Conduit System	477.0862	0.8525	2.5683	0.9712	0.3424	0.2210	4.9555
74		845C	Buried Cbl Nonmetallic	0.0000	0.0000	0.0000	0.0000	0.0000	0.0000	0.0000
75			Total	1312.4119	6.8038	6.2219	2.3529	0.9420	1.4556	17.7761
76	OVER 50		FIXED							
77		20C	Land	13.6425	0.0000	0.1097	0.0415	0.0098	0.0254	0.1864
78		110C	Building	522.3122	1.1239	3.2587	1.2323	0.3749	0.9730	6.9628
79		357CS	Other Digital Equipment	7978.2439	72.9460	30.2206	11.4283	5.7262	21.6065	141.9276
80		357C	Other Digital Equipment	1766.3859	16.1503	6.6909	2.5302	1.2678	4.8426	31.4817
81			Total	10280.5844	90.2201	40.2799	15.2324	7.3786	27.4475	180.5586

Section E - Entrance Facilities and Direct Trunked Transport
DS3-Investment Cost Calculation

	A	B	C	D	E	F	G	H	I	J
1	Qwest Defaults 7/20/01 10:04:18 AM						DS3			
2	South Dakota			Investment	Depreciation	Cost of Money	Income Tax	Ad Valorem	Maintenance	Total Capital Costs
3	Acct	FRC	Account Name		cD*(AP p7 cA)/12	cD*(AP p7 cB)/12	cD*(AP p7 cC)/12	cD*(AP p7 cD)/12	cD*(AP p7 cE)/12	sum(cE:cI)
82	OVER 50		VARIABLE							
83		20C	Land	0.3415	0.0000	0.0027	0.0010	0.0002	0.0006	0.0047
84		110C	Building	13.0739	0.0281	0.0816	0.0308	0.0094	0.0244	0.1743
85		85C	UG Cbl Nonmetallic	293.5269	1.7304	1.3834	0.5232	0.2107	0.1736	4.0213
86		357C	Other Digital Equipment	46.3729	0.4240	0.1757	0.0664	0.0333	0.1271	0.8265
87		357CS	Other Digital Equipment	197.5427	1.8062	0.7483	0.2830	0.1418	0.5350	3.5142
88		4C	Conduit System	292.4631	0.5226	1.5744	0.5954	0.2099	0.1355	3.0378
89		845C	Buried Cbl Nonmetallic	49.9701	0.2536	0.2376	0.0899	0.0359	0.0469	0.6638
90			**Total**	**893.2911**	**4.7649**	**4.2037**	**1.5897**	**0.6411**	**1.0431**	**12.2425**
91	**Investment Sources**									
92	Land= (AP p12 D10) * 377C + (AP p12 E10) * (57C+257C+357C+357CS)						Building = (AP p12 B10) * 377C + (AP p12 C10) * (57C+257C+357C+357CS)			
93	Entrance Facility and Mux = sE p16 cE									
94	Direct Trunk Transport = sE p19 cG									

	A	B	C	D	E	F
1	Qwest Defaults 7/20/01 10:04:18 AM					
2			DS1			
3	South Dakota					
4	**Description**	**FRC**	**Default Value**	**Overrides**	**This Run**	**Instructions**
5	**DS1 Entrance Facility Investments**			AP p15		Enter Investments by Account per DS1 entrance facility.
6	CIRCUIT-OTHER DIGITAL	357C	$274.72		$274.72	
7	CIRCUIT-SUB PAIR GAIN-DIGITAL	257C	$673.32		$673.32	
8	CIRCUIT-SUB PAIR GAIN-DIGITAL	257CP	$791.26		$791.26	
9	CIRCUIT-SUB PAIR GAIN-DIGITAL	257CS	$509.58		$509.58	
10	CIRCUIT-SUB PAIR GAIN-DIGITAL	257CSP	$676.48		$676.48	
11	POLES	1C	$6.25		$6.25	
12	C WIRE	3C	$0.30		$0.30	
13	CONDUIT SYSTEMS	4C	$207.36		$207.36	
14	UNDERGROUND CABLE METALLIC	5C	$109.09		$109.09	
15	BURIED DROP	35C	$23.84		$23.84	
16	AERIAL DROP	42C	$4.22		$4.22	
17	BURIED CABLE METALLIC	45C	$330.95		$330.95	
18	AERIAL CABLE METALLIC	52C	$11.82		$11.82	
19	INTRABUILDING CABLE METALLIC	62C	$65.28		$65.28	
20	UNDERGROUND CABLE NONMETALLIC	85C	$93.37		$93.37	
21	BURIED CABLE NONMETALLIC	845C	$459.63		$459.63	
22	INTRABUILDING CABLE NONMETALLIC	862C	$2.43		$2.43	
23	**MULTIPLEXING DS1 TO DSO**	257C	$10,619.94		$10,619.94	Enter MUX Investments per DS1.
24	All Investments are EFI					
25	**The default values are outputs from the NAC model**					
26	s = section					
27	p = page					
28	c = column					
29	r = row					
30	The spreadsheet shows the Override data entered by the user in ICM's custom input					
31	screens. If the user has input override data, the spreadsheet will determine this and display					
32	the override data in the Overrides column. The this run column will show the Override or					
33	if no override has been entered, the Default value.					
34						
35						

	A	B	C	D	E	F
1	Qwest Defaults 7/20/01 10:04:18 AM					
2			**DS3**			
3	South Dakota					
4	**Description**	**FRC**	**Default Value**	**Overrides**	**This Run**	**Instructions**
5	**DS3 Entrance Facility Investments**			AP p15		Enter Investments by Account per DS3 entrance facility.
6	CIRCUIT-OTHER DIGITAL	357C	$1,677.66		$1,677.66	
7	CIRCUIT-DIGITAL	257C	$158.76		$158.76	
8	CIRCUIT-DIGITAL SONET	257CS	$5,532.07		$5,532.07	
9	CIRCUIT-DIGITAL-PREMISES	257CP	$68.02		$68.02	
10	CIRCUIT-DIGITAL SONET-PREMISES	257CSP	$10,406.39		$10,406.39	
11	POLES	1C	$0.00		$0.00	
12	CONDUIT SYSTEMS	4C	$1,159.58		$1,159.58	
13	UNDERGROUND CABLE METALLIC	5C	$0.00		$0.00	
14	BURIED DROP	35C	$0.00		$0.00	
15	AERIAL DROP	42C	$0.00		$0.00	
16	BURIED CABLE METALLIC	45C	$0.00		$0.00	
17	AERIAL CABLE METALLIC	52C	$0.00		$0.00	
18	INTRABUILDING CABLE METALLIC	62C	$0.00		$0.00	
19	UNDERGROUND CABLE NONMETALLIC	85C	$859.45		$859.45	
20	BURIED CABLE NONMETALLIC	845C	$2,532.26		$2,532.26	
21	INTRABUILDING CABLE NONMETALLIC	862C	$26.57		$26.57	
22	**MULTIPLEXING DS3 TO DS1**	257C	$11,272.44		$11,272.44	Enter MUX Investments per DS3.
23						
24	**The default values are outputs from the NAC model**					
25	s = section					
26	p = page					
27	c = column					
28	r = row					
29	The spreadsheet shows the Override data entered by the user in ICM's custom input screens.					
30	If the user has input override data, the spreadsheet will determine this and display the					
31	override data in the Overrides column. The this run column will show the Override or if no					
32	override has been entered, the Default value.					
33						

Qwest Defaults 7/20/01 10:04:18 AM South Dakota

Mileage Band	Fixed or DISTANCE SENSITIVE	FRC	TOTAL DIRECT	NETWORK SUPPORT	Total Investment
OVER 0 TO 8	FIXED	357C	1128.623665	2.270098767	1130.893764
OVER 0 TO 8	FIXED	357CS	374.2416856	0	374.241686
OVER 0 TO 8	DISTANCE SENSITIVE	357C	2.261548083	0.63140504	2.892953
OVER 0 TO 8	DISTANCE SENSITIVE	357CS	44.18808299	0	44.188083
OVER 0 TO 8	DISTANCE SENSITIVE	4C	74.67130902	0	74.671309
OVER 0 TO 8	DISTANCE SENSITIVE	845C	0.248593949	0.122441796	0.371036
OVER 0 TO 8	DISTANCE SENSITIVE	85C	50.2117593	24.73116503	74.942924
OVER 8 TO 25	FIXED	357C	1129.601364	2.751651603	1132.353015
OVER 8 TO 25	FIXED	357CS	407.1762359	0	407.176236
OVER 8 TO 25	DISTANCE SENSITIVE	357C	1.447719076	0.304336301	1.752055
OVER 8 TO 25	DISTANCE SENSITIVE	357CS	41.57715289	0	41.577153
OVER 8 TO 25	DISTANCE SENSITIVE	4C	75.50438527	0	75.504385
OVER 8 TO 25	DISTANCE SENSITIVE	845C	3.665806414	1.805546443	5.471353
OVER 8 TO 25	DISTANCE SENSITIVE	85C	50.77195069	25.00708019	75.779031
OVER 25 TO 50	FIXED	357C	1131.774662	3.822082165	1135.596744
OVER 25 TO 50	FIXED	357CS	480.9754434	0	480.975443
OVER 25 TO 50	DISTANCE SENSITIVE	357C	0.487860358	0.06353968	0.551400
OVER 25 TO 50	DISTANCE SENSITIVE	357CS	21.61912058	0	21.619121
OVER 25 TO 50	DISTANCE SENSITIVE	4C	37.75505073	0	37.755051
OVER 25 TO 50	DISTANCE SENSITIVE	845C	9.069836873	4.467233087	13.537070
OVER 25 TO 50	DISTANCE SENSITIVE	85C	25.38789723	12.5044867	37.892384
OVER 50	FIXED	357C	1130.050846	2.973038678	1133.023885
OVER 50	FIXED	357CS	427.499011	0	427.499011
OVER 50	DISTANCE SENSITIVE	357C	0.999100808	0.431744796	1.430846
OVER 50	DISTANCE SENSITIVE	357CS	10.11047945	0	10.110479
OVER 50	DISTANCE SENSITIVE	4C	16.84084883	0	16.840849
OVER 50	DISTANCE SENSITIVE	845C	1.308575256	0.644522141	1.953097
OVER 50	DISTANCE SENSITIVE	85C	11.32441173	5.577695331	16.902107
All	FIXED	357C	1129.394322	2.64967588	1132.043998
All	FIXED	357CS	401.947724	0	401.947724
All	DISTANCE SENSITIVE	357C	1.635852516	0.488861129	2.124714
All	DISTANCE SENSITIVE	357CS	31.42180592	0	31.421806
All	DISTANCE SENSITIVE	4C	53.86580386	0	53.865804
All	DISTANCE SENSITIVE	845C	1.535426964	0.756255072	2.291682
All	DISTANCE SENSITIVE	85C	36.22136552	17.84037406	54.061740

These are investments outputs from the Transport Module.

Qwest Defaults 7/20/01 10:04:18 AM South Dakota

Mileage Band	Fixed or DISTANCE SENSITIVE	FRC	TOTAL DIRECT	NETWORK SUPPORT	Total Investment
OVER 0 TO 8	FIXED	357C	1718.439104	51.48995533	1769.929059
OVER 0 TO 8	FIXED	357CS	8097.640686	0	8097.640686
OVER 0 TO 8	DISTANCE SENSITIVE	357C	51.70087442	14.93704771	66.637922
OVER 0 TO 8	DISTANCE SENSITIVE	357CS	704.7186501	0	704.718650
OVER 0 TO 8	DISTANCE SENSITIVE	4C	1283.900283	0	1283.900283
OVER 0 TO 8	DISTANCE SENSITIVE	845C	0	0	0.000000
OVER 0 TO 8	DISTANCE SENSITIVE	85C	863.3421969	425.2282462	1288.570443
OVER 8 TO 25	FIXED	357C	1722.491492	53.48590736	1775.977399
OVER 8 TO 25	FIXED	357CS	8233.107879	0	8233.107879
OVER 8 TO 25	DISTANCE SENSITIVE	357C	53.03651797	24.58927395	77.625792
OVER 8 TO 25	DISTANCE SENSITIVE	357CS	108.8622877	0	108.862288
OVER 8 TO 25	DISTANCE SENSITIVE	4C	466.6491759	0	466.649176
OVER 8 TO 25	DISTANCE SENSITIVE	845C	9.656635549	4.75625333	14.412889
OVER 8 TO 25	DISTANCE SENSITIVE	85C	313.7922236	154.5543788	468.346602
OVER 25 TO 50	FIXED	357C	1702.566073	43.67189501	1746.237968
OVER 25 TO 50	FIXED	357CS	7512.278004	0	7512.278004
OVER 25 TO 50	DISTANCE SENSITIVE	357C	34.92589784	14.01556486	48.941463
OVER 25 TO 50	DISTANCE SENSITIVE	357CS	288.9772534	0	288.977253
OVER 25 TO 50	DISTANCE SENSITIVE	4C	477.0861547	0	477.086155
OVER 25 TO 50	DISTANCE SENSITIVE	845C	0	0	0.000000
OVER 25 TO 50	DISTANCE SENSITIVE	85C	320.8104355	158.01111	478.821546
OVER 50	FIXED	357C	1716.065198	50.32071781	1766.385915
OVER 50	FIXED	357CS	7978.243857	0	7978.243857
OVER 50	DISTANCE SENSITIVE	357C	31.81453164	14.55837248	46.372904
OVER 50	DISTANCE SENSITIVE	357CS	197.5427152	0	197.542715
OVER 50	DISTANCE SENSITIVE	4C	292.4630824	0	292.463082
OVER 50	DISTANCE SENSITIVE	845C	33.47998284	16.4901408	49.970124
OVER 50	DISTANCE SENSITIVE	85C	196.6630301	96.86388052	293.526911
All	FIXED	357C	1716.980098	50.77134042	1767.751439
All	FIXED	357CS	8035.821607	0	8035.821607
All	DISTANCE SENSITIVE	357C	47.2674772	17.80611184	65.073589
All	DISTANCE SENSITIVE	357CS	394.1347183	0	394.134718
All	DISTANCE SENSITIVE	4C	787.6949763	0	787.694976
All	DISTANCE SENSITIVE	845C	6.830299967	3.364177596	10.194478
All	DISTANCE SENSITIVE	85C	529.6753341	260.884866	790.560200

These are investments outputs from the Transport Module.

Section G - 8XX Database Services
8XX - Develop Total Prod Costs

Row	Qwest Defaults 7/20/01 10:04:18 AM South Dakota	Source or Calculation	Factor Value [AP p1 cB]	Basic Query	Call Handling and Destination	POTS Translation
			A	B	C	D
1	Investment	sG p2 cD Total		0.00154445	0.00000619	0.00000206
2						
3	Investment Based Costs (IBC)	sG p2 cK Total		0.00031104	0.00000123	0.00000041
4	Element Specific Expenses	AP p10 F52		0.01418400		
5	*Total IBC + Element Specific Expenses*	*r3 + r4*		0.0144950	0.0000012	0.0000004
6						
7	***Directly Assigned***					
8	Product Management Expense	cA*r5	0.02557	0.0003706	0.0000000	0.0000000
9	Sales Expense	cA*r5	0.00922	0.0001337	0.0000000	0.0000000
10	Product Advertising Expense	cA*r5	0.00000	0.0000000	0.0000000	0.0000000
11	Business Fees (Other Operating Taxes)	cA*(r5+r8:r10)	0.00203	0.0000304	0.0000000	0.0000000
12	***Directly Assigned Costs***	*Sum r8:r11*		0.0005347	0.0000000	0.0000000
13						
14	***Total Direct***	*r5 + r12*		0.0150297	0.0000013	0.0000004
15						
16	***Directly Attributed***					
17	Network Operations	cA*r14	0.04088	0.0006144	0.0000001	0.0000000
18	Network Support Assets	cA*r14	0.01536	0.0002309	0.0000000	0.0000000
19	General Support Assets	cA*r14	0.06951	0.0010447	0.0000001	0.0000000
20	General Purpose Computers	cA*r14	0.03471	0.0005217	0.0000000	0.0000000
21	Uncollectible - Interconnect	cA*r14	0.00040	0.0000060	0.0000000	0.0000000
22	Accounting and Finance Expense	cA*r14	0.00884	0.0001328	0.0000000	0.0000000
23	Human Resources Expense	cA*r14	0.00814	0.0001224	0.0000000	0.0000000
24	Information Management Expense	cA*r14	0.05701	0.0008568	0.0000001	0.0000000
25	Intangibles	cA*r14	0.00209	0.0000314	0.0000000	0.0000000
26	***Total Directly Attributed Costs***	*Sum r17:r25*		0.0035613	0.0000003	0.0000001
27						
28	*Total Element Long Run Incremental Costs*	*r 14 + r26*		0.0185910	0.0000016	0.0000005
29						
30	***Common***					
31	Executive Expense	cA*r28	0.00780	0.0001451	0.0000000	0.0000000
32	Planning Expense	cA*r28	0.00058	0.0000108	0.0000000	0.0000000
33	External Relations Expense	cA*r28	0.01303	0.0002422	0.0000000	0.0000000
34	Legal Expense	cA*r28	0.00615	0.0001143	0.0000000	0.0000000
35	Other Procurement Expense	cA*r28	0.00236	0.0000439	0.0000000	0.0000000
36	Research and Development Expense	cA*r28	0.00004	0.0000007	0.0000000	0.0000000
37	Other General and Admin Exp	cA*r28	0.01521	0.0002828	0.0000000	0.0000000
38	*Total Common Costs*	*Sum r31:r37*		0.0008397	0.0000001	0.0000000
39						
40	*TELRIC + Common*	*r27 + r38*		0.019431	0.0000016	0.0000005

Section G - 8XX Database Services
8XX-Investment Cost Calculation

	A	B	C	D	E	F	G	H	I	J	K
1	Qwest Defaults 7/20/01 10:04:18 AM						8XX Database				
2	South Dakota			Investment	Depreciation	Cost of Money	Income Tax	Ad Valorem	Maintenance	Digital Electronic Expense - RTU 377C	Total Capital Costs
3	Acct	FRC	Account Name		cD*(AP p7 cA)	cD*(AP p7 cB)	cD*(AP p7 cC)	cD*(AP p7 cD)	cD*(AP p7 cE)	cD*(AP p1 B5)	sum(cE:cJ)
4	Basic Query										
5	2111	20C	Land	0.000001911	0.0000000	0.0000002	0.0000001	0.0000000	0.0000000		0.000000313
6	2121	110C	Building	0.000073296	0.0000019	0.0000055	0.0000021	0.0000006	0.0000016		0.000011725
7	2212	377C	Digital Switch	0.001349040	0.0001469	0.0000613	0.0000232	0.0000116	0.0000282	0.0000000	0.000271281
8	2232.5	57C	Other Analog Equipment	0.000006835	0.0000011	0.0000003	0.0000001	0.0000001	0.0000001		0.000001670
9	2232.3	357C	Other Digital Equipment	0.000006124	0.0000007	0.0000003	0.0000001	0.0000001	0.0000002		0.000001310
10	2232.3	357CS	Other Digital Equipment	0.000002952	0.0000003	0.0000001	0.0000001	0.0000000	0.0000001		0.000000630
11	2422.12,.22	85C	UG Cbl Nonmetallic	0.000001624	0.0000001	0.0000001	0.0000000	0.0000000	0.0000000		0.000000267
12	2423.12,.22	845C	Buried Cbl Nonmetallic	0.000004936	0.0000003	0.0000003	0.0000001	0.0000000	0.0000001		0.000000787
13	2124	361C	General Purpose Comp.	0.000095000	0.0000157	0.0000045	0.0000017	0.0000008	0.0000000		0.000022714
14	2441	4C	Conduit System	0.000002732	0.0000001	0.0000002	0.0000001	0.0000000	0.0000000		0.000000340
15			**Total**	**0.001544450**	**0.0001670**	**0.0000728**	**0.0000275**	**0.0000133**	**0.0000304**	**0.0000000**	**0.000311037**
16	Call Handling and Destination										
17	2111	20C	Land	0.000000008	0.0000000	0.0000000	0.0000000	0.0000000	0.0000000		0.000000001
18	2121	110C	Building	0.000000315	0.0000000	0.0000000	0.0000000	0.0000000	0.0000000		0.000000050
19	2212	377C	Digital Switch	0.000005863	0.0000006	0.0000003	0.0000001	0.0000001	0.0000001	0.0000000	0.000001179
20	2124	361C	General Purpose Comp.	0.000000000	0.0000000	0.0000000	0.0000000	0.0000000	0.0000000		0.000000000
21			**Total**	**0.000006186**	**0.0000006**	**0.0000003**	**0.0000001**	**0.0000001**	**0.0000001**	**0.0000000**	**0.000001231**
22	POTS Translation										
23	2111	20C	Land	0.000000003	0.0000000	0.0000000	0.0000000	0.0000000	0.0000000		0.000000000
24	2121	110C	Building	0.000000105	0.0000000	0.0000000	0.0000000	0.0000000	0.0000000		0.000000017
25	2212	377C	Digital Switch	0.000001954	0.0000002	0.0000001	0.0000000	0.0000000	0.0000000	0.0000000	0.000000393
26	2124	361C	General Purpose Comp.	0.000000000	0.0000000	0.0000000	0.0000000	0.0000000	0.0000000		0.000000000
27			**Total**	**0.000002062**	**0.0000002**	**0.0000001**	**0.0000000**	**0.0000000**	**0.0000000**	**0.0000000**	**0.000000410**
28	**Basic Query Investment Sources**										
29	Land= (AP p12 D10) * 377C + (AP p12 E10) * (57C+257C+357C+357CS)					Building = (AP p12 B10) * 377C + (AP p12 C10) * (57C+257C+357C+357CS)					
30	All others = sG p3 sum of column F by account										
31											
32	s = section										
33	p = page										
34	c = column										
35	r = row										
36	Upper Case letter with number indicates a cell location, i.e. G40										

	A	B	C	D	E	F
1	**Basic 800 Services Query (& Response) Investments and Expenses**					
2						
3				**2000 Investment & Expenses**	**Loading Factor**	**Loaded Investment**
4			Source:	8XX Services Model 2000, v2.1	Ap p13 cE	cD Investments * cE
5	LSTP Hardware/Query (& Response)					
6	377C			0.00048943	1.2626	0.00061796
7						
8	LSTP Software/Query (& Response)					
9	377C			0.00000771	1.2626	0.00000974
10						
11	InterSTP Data Link Hardware/Query (& Response)					
12	377C			0.00000123	1.2626	0.00000156
13	57C			0.00000199	1.2626	0.00000251
14	357C			0.00000084	1.0000	0.00000084
15	357CS			0.00000037	1.0000	0.00000037
16	845C			0.00000221	1.0000	0.00000221
17	85C			0.00000028	1.0000	0.00000028
18	4C			0.00000045	1.0000	0.00000045
19						
20	InterSTP Data Link Software/Query (& Response)					
21	377C			0.00011803	1.2626	0.00014902
22						
23	RSTP Hardware/Query (& Response)					
24	377C			0.00009478	1.2626	0.00011967
25						
26	RSTP Software/Query (& Response)					
27	377C			0.00001107	1.2626	0.00001398
28						
29	Data Link & MRS ISCP Hardware/Query (& Response)					
30	377C	(RSTP Hardware)		0.00000213	1.2626	0.00000268
31	57C			0.00000343	1.2626	0.00000433
32	357C			0.00000529	1.0000	0.00000529
33	357CS			0.00000258	1.0000	0.00000258
34	845C			0.00000273	1.0000	0.00000273
35	85C			0.00000134	1.0000	0.00000134
36	4C			0.00000229	1.0000	0.00000229
37	377C	(ISCP Hardware)		0.00032454	1.1803	0.00038306
38						
39	RSTP - ISCP Data Link Software/Query (& Response)					
40	377C			0.00004069	1.2626	0.00005137
41						
42	ISCP Software/Query (& Response)					
43	361C	(2681.4)		0.00000000	1.0000	0.00000000
44						
45	**Call Handling and Destination Feature Increment per Query**					
46	ISCP Hardware/Query (& Response)					
47	377C			0.00000497	1.1803	0.00000586
48						
49	ISCP Software/Query (& Response)					
50	361C	(2681.4)		0.00000000	1.0000	0.00000000
51						
52	**POTS Translation Feature Increment per Query**					
53	ISCP Hardware/Query (& Response)					
54	377C			0.00000166	1.1803	0.00000195
55						
56	ISCP Software/Query (& Response)					
57	361C	(2681.4)		0.00000000	1.0000	0.00000000
58						
59						
60	*Account 2124 translated from account 2681.4					
61						
62	NOTE : All investments in this model are Engineered, Furnished and Installed (EF&I).					

Section H - Line Information Database
LIDB - Develop Total Prod Costs

Row	Qwest Defaults 7/20/01 10:04:18 AM South Dakota	Source or Calculation	Factor Value [AP p1 cB]	LIDB LIDB per Query
			A	B
1	**Investment**	sH p2 D16		0.001711277
2				
3	Investment Based Costs (IBC)	sH p2 K16		0.000340428
4	Element Specific Expenses	sH p4 D74+D78		0.000291954
5	***Total IBC + Element Specific Expenses***	*r3 + r4*		**0.0006324**
6				
7	***Directly Assigned***			
8	Product Management Expense	cA*r5	0.02557	0.0000162
9	Sales Expense	cA*r5	0.00922	0.0000058
10	Product Advertising Expense	cA*r5	0.00000	0.0000000
11	Business Fees (Other Operating Taxes)	cA*(r5+r8:r10)	0.00203	0.0000013
12	***Directly Assigned Costs***	*Sum r8:r11*		0.0000233
13				
14	***Total Direct***	*r5 + r12*		0.0006557
15				
16	***Directly Attributed***			
17	Network Operations	cA*r14	0.04088	0.0000268
18	Network Support Assets	cA*r14	0.01536	0.0000101
19	General Support Assets	cA*r14	0.06951	0.0000456
20	General Purpose Computers	cA*r14	0.03471	0.0000228
21	Uncollectible - Interconnect	cA*r14	0.00040	0.0000003
22	Accounting and Finance Expense	cA*r14	0.00884	0.0000058
23	Human Resources Expense	cA*r14	0.00814	0.0000053
24	Information Management Expense	cA*r14	0.05701	0.0000374
25	Intangibles	cA*r14	0.00209	0.0000014
26	***Total Directly Attributed Costs***	*Sum r17:r25*		0.0001554
27				
28	***Total Element Long Run Incremental Costs***	*r14 + r26*		**0.0008111**
29				
30	***Common***			
31	Executive Expense	cA*r28	0.00780	0.0000063
32	Planning Expense	cA*r28	0.00058	0.0000005
33	External Relations Expense	cA*r28	0.01303	0.0000106
34	Legal Expense	cA*r28	0.00615	0.0000050
35	Other Procurement Expense	cA*r28	0.00236	0.0000019
36	Research and Development Expense	cA*r28	0.00004	0.0000000
37	Other General and Admin Exp	cA*r28	0.01521	0.0000123
38	***Total Common Costs***	*Sum r31:r37*		**0.0000366**
39				
40	***TELRIC + Common***	*r27 + r38*		**0.0008**

c = column, r = row, s = section, p = page, AP = Appendix

Section H - Line Information Database
LIDB - Investment Cost Calc

	A	B	C	D	E	F	G	H	I	J	K
1	Qwest Defaults 7/20/0					LIDB per Query					
2	South Dakota			Investment	Depreciation	Cost of Money	Income Tax	Ad Valorem	Maintenance	Digital Electronic Expense - RTU 377C	Total Capital Costs
3	Acct	FRC	Account Name		cD*(AP p7 cA)	cD*(AP p7 cB)	cD*(AP p7 cC)	cD*(AP p7 cD)	cD*(AP p7 cE)	cD*(AP p1 B5)	sum(cE:cJ)
4	LIDB per Query			sum(sH p3-4 cF) by FRC							
5											
6	2111	20C	Land	0.000002228	0.0000000	0.0000002	0.0000001	0.0000000	0.0000000		0.000000365
7	2121	110C	Building	0.000085441	0.0000022	0.0000064	0.0000024	0.0000007	0.0000019		0.000013668
8	2212	377C	Digital Switch	0.001531361	0.0001668	0.0000696	0.0000263	0.0000132	0.0000321	0.0000000	0.000307945
9	2232.5	57C	Other Analog Equipment	0.000024956	0.0000040	0.0000011	0.0000004	0.0000002	0.0000003		0.000006097
10	2232.3	357C	Other Digital Equipment	0.000025993	0.0000029	0.0000012	0.0000004	0.0000002	0.0000009		0.000005559
11	2124	361C	General Purpose Comp.	0.000000000	0.0000000	0.0000000	0.0000000	0.0000000	0.0000000		0.000000000
12	2232.3	357CS	Other Digital Equipment	0.000008885	0.0000010	0.0000004	0.0000002	0.0000001	0.0000003		0.000001897
13	2422.12,.22	85C	UG Cbl Nonmetallic	0.000005076	0.0000004	0.0000003	0.0000001	0.0000000	0.0000000		0.000000834
14	2423.12,.22	845C	Buried Cbl Nonmetallic	0.000018867	0.0000011	0.0000011	0.0000004	0.0000002	0.0000002		0.000003008
15	2441	4C	Conduit System	0.000008470	0.0000002	0.0000005	0.0000002	0.0000001	0.0000000		0.000001056
16			Total	**0.001711**	**0.000179**	**0.000081**	**0.000031**	**0.000015**	**0.000036**	**0.0000000**	**0.000340**
17											
18	**Investment Sources**										
19	Land= (AP p12 D10) * 377C + (AP p12 E10) * (57C+257C+357C+357CS)					Building = (AP p12 B10) * 377C + (AP p12 C10) * (57C+257C+357C+357CS)					

	A	B	C	D	E	F
1						
2	**LIDB Query Service per Query (& Response) Investments and Expenses**					
3						
4				**2000 Investment & Expenses**	**Loading Factor**	**Loaded Investment**
5			Source:	LIDB Services Model 2000, v3.51.xls	Ap p13 cE	cD Investments * cE
6	LSTP Hardware/Query (& Response)					
7	377C			0.00011210	1.2626	0.00014154
8						
9	LSTP Software/Query (& Response)					
10	377C			0.00000177	1.2626	0.00000223
11						
12	InterSTP Data Link Hardware/Query (& Response)					
13	377C			0.00000644	1.2626	0.00000813
14	57C			0.00001038	1.2626	0.00001311
15	357C			0.00000437	1	0.00000437
16	357CS			0.00000195	1	0.00000195
17	845C			0.00001154	1	0.00001154
18	85C			0.00000147	1	0.00000147
19	4C			0.00000233	1	0.00000233
20						
21	InterSTP Data Link Software/Query (& Response)					
22	377C			0.00012329	1.2626	0.00015566
23						
24	RSTP Hardware/Query (& Response)					
25	377C			0.00009082	1.2626	0.00011467
26						
27	RSTP Software/Query (& Response)					
28	377C			0.00001061	1.2626	0.00001339
29						
30	Data Link & MRS ISCP Hardware/Query (& Response)					
31	377C		(RSTP Hardware)	0.00000289	1.2626	0.00000364
32	57C			0.00000465	1.2626	0.00000587
33	357C			0.00000717	1	0.00000717
34	357CS			0.00000344	1	0.00000344
35	845C			0.00000363	1	0.00000363
36	85C			0.00000179	1	0.00000179
37	4C			0.00000304	1	0.00000304
38	377C		(ISCP Hardware)	0.00030306	1.1803	0.00035772
39				ISCP Includes Power		
40	RSTP - MRS ISCP Data Link Software/Query (& Response)					
41	377C			0.00005524	1.2626	0.00006975
42						
43	MRS ISCP Software/Query (& Response)					
44	361C			0.00000000	1.0000	0.00000000
45						
46						

Section H - Line Information Database
LIDB - Inv & Exp Inputs

	A	B	C	D	E	F
1						
2	**LIDB Query Service per Query (& Response) Investments and Expenses**					
3						
4				**2000 Investment & Expenses**	**Loading Factor**	**Loaded Investment**
5			Source:	LIDB Services Model 2000, v3.51.xls	Ap p13 cE	cD Investments * cE
47	RSTP Hardware/Query (& Response)					
48	377C			0.00008829	1.2626	0.00011148
49						
50	RSTP Software/Query (& Response)					
51	377C			0.00001031	1.2626	0.00001302
52						
53	Data Link & LIDB ISCP Hardware/Query (& Response)					
54	377C	(RSTP Hardware)		0.00000294	1.2626	0.00000371
55	57C			0.00000473	1.2626	0.00000598
56	357C			0.00000730	1	0.00000730
57	357CS			0.00000350	1	0.00000350
58	845C			0.00000369	1	0.00000369
59	85C			0.00000182	1	0.00000182
60	4C			0.00000310	1	0.00000310
61	377C	(ISCP Hardware)		0.00039433	1.1803	0.00046544
62				ISCP Includes Power		
63	RSTP - LIDB ISCP Data Link Software/Query (& Response)					
64	377C			0.00005621	1.2626	0.00007097
65						
66	LIDB ISCP Software/Query (& Response)					
67	361C			0.00000000	1	0.00000000
68						
69	*Account 2124 translated from account 2681.4					
70						
71	Telcordia Work Packages & SLEUTH Maintenance/Query & Response					
72	377C			0.00000000	1.2626	0.00000000
73	LIDB/MRS/SOPI/LVAS/LIDB/SLEUTH Admin. & Software Support/Query & Response					
74	377M	Expense		0.00029194		
75	LVAS/AMATPS/SLEUTH/MRS/LIDB Data Link Installation/Query & Response					
76	357C			0.00000716	1	0.00000716
77	RSTP-LIDB Data Link Maintenance/Query & Response					
78	357M	Expense		0.00000002		

Section I - Signaling
Signal-Develop Total Prod Costs

Qwest Defaults 7/20/01 10:04:18 AM

Qwest South Dakota

Row		Source or Calculation	Factor Value [AP p1 cB]	Signaling TCAP Signal Transport	TCAP Signal Switching	ISUP Signal Formulation	ISUP Signal Transport	ISUP Signal Switching	STP Port
			A	C	D	E	F	G	I
1	**Investment**	sl p2-3 cD		0.0000805	0.0021278	0.0022697	0.0007113	0.0027601	11166.4388
2									
3	Investment Based Costs (IBC)	sl p2-3 cJ		0.0000160	0.0004753	0.0004516	0.0001445	0.0006011	185.1302
4	Element Specific Expenses	sl p4 cB		0.0000000	0.0001476	0.0000000	0.0000000	0.0001476	
5	***Total IBC + Element Specific Expenses***	***r3 + r4***		0.0000160	0.0006229	0.0004516	0.0001445	0.0007487	185.1302
6									
7	***Directly Assigned***								
8	Product Management Expense	cA*r5	0.02557	0.0000004	0.0000159	0.0000115	0.0000037	0.0000191	4.7329
9	Sales Expense	cA*r5	0.00922	0.0000001	0.0000057	0.0000042	0.0000013	0.0000069	1.7077
10	Product Advertising Expense	cA*r5	0.00000	0.0000000	0.0000000	0.0000000	0.0000000	0.0000000	0.0000
11	Business Fees (Other Operating Taxes)	cA*(r5+r8:r10)	0.00203	0.0000000	0.0000013	0.0000009	0.0000003	0.0000016	0.3880
12	***Directly Assigned Costs***	***Sum r8:r11***		0.0000006	0.0000230	0.0000167	0.0000053	0.0000276	6.8286
13									
14	***Total Direct***	***r5 + r12***		0.0000166	0.0006459	0.0004682	0.0001498	0.0007763	191.9588
15									
16	***Directly Attributed***								
17	Network Operations	cA*r14	0.04088	0.0000007	0.0000264	0.0000191	0.0000061	0.0000317	7.8473
18	Network Support Assets	cA*r14	0.01536	0.0000003	0.0000099	0.0000072	0.0000023	0.0000119	2.9492
19	General Support Assets	cA*r14	0.06951	0.0000012	0.0000449	0.0000325	0.0000104	0.0000540	13.3426
20	General Purpose Computers	cA*r14	0.03471	0.0000006	0.0000224	0.0000163	0.0000052	0.0000269	6.6636
21	Uncollectible - Interconnect	cA*r14	0.00040	0.0000000	0.0000003	0.0000002	0.0000001	0.0000003	0.0769
22	Accounting and Finance Expense	cA*r14	0.00884	0.0000001	0.0000057	0.0000041	0.0000013	0.0000069	1.6967
23	Human Resources Expense	cA*r14	0.00814	0.0000001	0.0000053	0.0000038	0.0000012	0.0000063	1.5634
24	Information Management Expense	cA*r14	0.05701	0.0000009	0.0000368	0.0000267	0.0000085	0.0000443	10.9435
25	Intangibles	cA*r14	0.00209	0.0000000	0.0000014	0.0000010	0.0000003	0.0000016	0.4014
26	***Total Directly Attributed Costs***	***Sum r17:r25***		0.0000039	0.0001530	0.0001109	0.0000355	0.0001839	45.4847
27									
28	***Total Element Long Run Incremental Costs***	***r 14 + r26***		0.0000205	0.0007989	0.0005792	0.0001853	0.0009602	237.44
29									
30	***Common***								
31	Executive Expense	cA*r28	0.00780	0.0000002	0.0000062	0.0000045	0.0000014	0.0000075	1.8532
32	Planning Expense	cA*r28	0.00058	0.0000000	0.0000005	0.0000003	0.0000001	0.0000006	0.1377
33	External Relations Expense	cA*r28	0.01303	0.0000003	0.0000104	0.0000075	0.0000024	0.0000125	3.0936
34	Legal Expense	cA*r28	0.00615	0.0000001	0.0000049	0.0000036	0.0000011	0.0000059	1.4599
35	Other Procurement Expense	cA*r28	0.00236	0.0000000	0.0000019	0.0000014	0.0000004	0.0000023	0.5602
36	Research and Development Expense	cA*r28	0.00004	0.0000000	0.0000000	0.0000000	0.0000000	0.0000000	0.0086
37	Other General and Admin Exp	cA*r28	0.01521	0.0000003	0.0000122	0.0000088	0.0000028	0.0000146	3.6119
38	***Total Common Costs***	***Sum r31:r37***		0.0000009	0.0000361	0.0000262	0.0000084	0.0000434	10.7251
39									
40	***TELRIC + Common***	***r27 + r38***		**0.0000215**	**0.0008350**	**0.0006053**	**0.0001937**	**0.0010036**	**248.17**

c = column, r = row, s = section, p = page, AP = Appendix

Section I - Signaling
Signal - Investment Cost Calc

	A	B	C	D	E	F	G	H	I	J	K
1							Signaling				
2	Qwest Defaults 7/20/01 10:04:18 AM			Investment	Depreciation	Cost of Money	Income Tax	Ad Valorem	Maintenance	Digital Electronic Expense - RTU 377C	Total Capital Costs
3	Acct	FRC	Account Name		cD*(AP p7 cA)	cD*(AP p7 cB)	cD*(AP p7 cC)	cD*(AP p7 cD)	cD*(AP p7 cE)	cD*(AP p1 B5)	sum(cE:cJ)
4	**TCAP Signal Transport**			sl p4 D9-17							
5	2111	20C	Land	0.00000010	0.00000000	0.00000001	0.00000000	0.00000000	0.00000000		0.00000002
6	2121	110C	Building	0.00000380	0.00000010	0.00000028	0.00000011	0.00000003	0.00000008		0.00000061
7	2212	377C	Digital Switch	0.00006320	0.00000688	0.00000287	0.00000109	0.00000054	0.00000132		0.00001271
8	2232.5	57C	Other Analog Equipment	0.00000506	0.00000081	0.00000023	0.00000009	0.00000004	0.00000006		0.00000124
9	2232.3	357C	Other Digital Equipment	0.00000169	0.00000019	0.00000008	0.00000003	0.00000001	0.00000006		0.00000036
10	2232.3	357CS	Other Digital Equipment	0.00000075	0.00000008	0.00000003	0.00000001	0.00000001	0.00000002		0.00000016
11	2423.12,.22	845C	Buried Cbl Nonmetallic	0.00000445	0.00000027	0.00000025	0.00000010	0.00000004	0.00000005		0.00000071
12	2422.12,.22	85C	UG Cbl Nonmetallic	0.00000057	0.00000004	0.00000003	0.00000001	0.00000000	0.00000000		0.00000009
13	2441	4C	Conduit System	0.00000090	0.00000002	0.00000006	0.00000002	0.00000001	0.00000000		0.00000011
14	2124	361C	General Purpose Comp.	0.00000000	0.00000000	0.00000000	0.00000000	0.00000000	0.00000000		0.00000000
15			**Total**	**0.00008051**	**0.00000839**	**0.00000385**	**0.00000146**	**0.00000069**	**0.00000161**	**0.00000000**	**0.00001600**
16	**TCAP Signal Switching**			sl p4 D21-22							
17	2111	20C	Land	0.00000111	0.00000000	0.00000011	0.00000004	0.00000001	0.00000002		0.00000018
18	2121	110C	Building	0.00004242	0.00000110	0.00000318	0.00000120	0.00000037	0.00000095		0.00000679
19	2212	377C	Digital Switch	0.00078988	0.00008603	0.00003590	0.00001357	0.00000680	0.00001654	0.00000000	0.00015884
20	2124	361C	General Purpose Comp.	0.00129436	0.00021338	0.00006164	0.00002331	0.00001115	0.00000000		0.00030947
21			**Total**	**0.00212777**	**0.00030050**	**0.00010082**	**0.00003813**	**0.00001833**	**0.00001751**	**0.00000000**	**0.00047528**
22	**ISUP Signal Formulation**			sl p4 D26-27							
23	2111	20C	Land	0.00000301	0.00000000	0.00000029	0.00000011	0.00000003	0.00000007		0.00000049
24	2121	110C	Building	0.00011552	0.00000298	0.00000865	0.00000327	0.00000099	0.00000258		0.00001848
25	2212	377C	Digital Switch	0.00215116	0.00023428	0.00009776	0.00003697	0.00001853	0.00004504	0.00000000	0.00043258
26	2124	361C	General Purpose Comp.	0.00000000	0.00000000	0.00000000	0.00000000	0.00000000	0.00000000		0.00000000
27			**Total**	**0.00226969**	**0.00023727**	**0.00010670**	**0.00004035**	**0.00001955**	**0.00004769**	**0.00000000**	**0.00045155**
28	**ISUP Signal Transport**			sl p4 D31-38							
29	2111	20C	Land	0.00000093	0.00000000	0.00000009	0.00000003	0.00000001	0.00000002		0.00000015
30	2121	110C	Building	0.00003585	0.00000093	0.00000268	0.00000101	0.00000031	0.00000080		0.00000573
31	2212	377C	Digital Switch	0.00058166	0.00006335	0.00002643	0.00001000	0.00000501	0.00001218	0.00000000	0.00011697
32	2232.5	57C	Other Analog Equipment	0.00007087	0.00001141	0.00000320	0.00000121	0.00000061	0.00000089		0.00001731
33	2232.3	357C	Other Digital Equipment	0.00001387	0.00000152	0.00000063	0.00000024	0.00000012	0.00000046		0.00000297
34	2232.3	357CS	Other Digital Equipment	0.00000127	0.00000014	0.00000006	0.00000002	0.00000001	0.00000004		0.00000027
35	2423.12,.22	845C	Buried Cbl Nonmetallic	0.00000515	0.00000031	0.00000029	0.00000011	0.00000004	0.00000006		0.00000082
36	2422.12,.22	85C	UG Cbl Nonmetallic	0.00000065	0.00000005	0.00000004	0.00000001	0.00000001	0.00000000		0.00000011
37	2441	4C	Conduit System	0.00000104	0.00000002	0.00000007	0.00000003	0.00000001	0.00000001		0.00000013
38	2124	361C	General Purpose Comp.	0.00000000	0.00000000	0.00000000	0.00000000	0.00000000	0.00000000		0.00000000
39			**Total**	**0.00071130**	**0.00007772**	**0.00003349**	**0.00001267**	**0.00000613**	**0.00001446**	**0.00000000**	**0.00014447**
40	**ISUP Signal Switching**			sl p4 D42-43							
41	2111	20C	Land	0.00000194	0.00000000	0.00000019	0.00000007	0.00000002	0.00000004		0.00000032
42	2121	110C	Building	0.00007460	0.00000193	0.00000559	0.00000211	0.00000064	0.00000167		0.00001193
43	2212	377C	Digital Switch	0.00138919	0.00015130	0.00006313	0.00002387	0.00001196	0.00002909	0.00000000	0.00027936
44	2124	361C	General Purpose Comp.	0.00129436	0.00021338	0.00006164	0.00002331	0.00001115	0.00000000		0.00030947

Section I - Signaling
Signal - Investment Cost Calc

	A	B	C	D	E	F	G	H	I	J	K
1					Signaling						
2	Qwest Defaults 7/20/01 10:04:18 AM			Investment	Depreciation	Cost of Money	Income Tax	Ad Valorem	Maintenance	Digital Electronic Expense - RTU 377C	Total Capital Costs
3	Acct	FRC	Account Name		cD*(AP p7 cA)	cD*(AP p7 cB)	cD*(AP p7 cC)	cD*(AP p7 cD)	cD*(AP p7 cE)	cD*(AP p1 B5)	sum(cE:cJ)
45			Total	0.00276010	0.00036660	0.00013054	0.00004937	0.00002377	0.00003080	0.00000000	0.00060108

Section I - Signaling
Signal - Investment Cost Calc

	A	B	C	D	E	F	G	H	I	J	K
1					Signaling						
2	Qwest Defaults 7/20/01 10:04:18 AM			Investment	Depreciation	Cost of Money	Income Tax	Ad Valorem	Maintenance	Digital Electronic Expense - RTU 377C	Total Capital Costs
3	Acct	FRC	Account Name		cD*(AP p7 cA)	cD*(AP p7 cB)	cD*(AP p7 cC)	cD*(AP p7 cD)	cD*(AP p7 cE)	cD*(AP p1 B5)	sum(cE:cJ)
46	**STP per Port**			sl p5 G10							
47	2111	20C	Land	14.81662	0.00000	0.11916	0.04506	0.01063	0.02760		0.20245415
48	2121	110C	Building	568.32316	1.22288	3.54581	1.34090	0.40790	1.05867		7.57615989
49	2212	377C	Digital Switch	10583.29902	96.05250	40.07964	15.15666	7.59590	18.46684	0.00000	177.35154356
50			**Total**	**11166.43879**	**97.27538**	**43.74461**	**16.54262**	**8.01443**	**19.55311**	**0.00000**	**185.13016**
51	**Investment Sources**										
52	Land= (AP p12 D10) * 377C + (AP p12 E10) * (57C+257C+357C+357CS)					Building = (AP p12 B10) * 377C + (AP p12 C10) * (57C+257C+357C+357CS)					
53											
54	See Investment column for source of other investments										

Section I - Signaling
Signaling - Inv & Exp Inputs

	A	B	C	D	E	F
1	Qwest Defaults 7/20/01 10:04:18 AM					
2		SS7 SERVICE - PER SIGNALLED MESSAGE				
3						
4		SUMMARY OF INVESTMENTS AND EXPENSES				
5	South Dakota					
6	**Acct Code**	**Investment & Expenses Before Loadings**	**Loading Factor**	**Loaded Investment**		
7		**A**	**B**	**C**		
8	Source		Ap p13 cE	A Investments * B		
9	**TCAP SIGNAL TRANSPORT**					
10	377C	$0.0000500524	1.2626	$0.0000631962		
11	57C	$0.0000040053	1.2626	$0.0000050571		
12	357C	$0.0000016871	1	$0.0000016871		
13	357CS	$0.0000007522	1	$0.0000007522		
14	845C	$0.0000044537	1	$0.0000044537		
15	85C	$0.0000005664	1	$0.0000005664		
16	4C	$0.0000008995	1	$0.0000008995		
17	361C	$0.0000000000	1.0629	$0.0000000000		
18	Expense	$0.0000000000				
19						
20	**TCAP SIGNAL SWITCHING**					
21	377C	$0.0006256008	1.2626	$0.0007898844		
22	361C	$0.0012177831	1.0629	$0.0012943617		
23	Expense	$0.0001476061				
24						
25	**ISUP SIGNAL FORMULATION**					
26	377C	$0.0017037500	1.2626	$0.0021511571		
27	361C	$0.0000000000	1.0629	$0.0000000000		
28	Expense	$0.0000000000				
29						
30	**ISUP SIGNAL TRANSPORT**					
31	377C	$0.0004606834	1.2626	$0.0005816595		
32	57C	$0.0000561332	1.2626	$0.0000708739		
33	357C	$0.0000138739	1	$0.0000138739		
34	357CS	$0.0000012688	1	$0.0000012688		
35	845C	$0.0000051498	1	$0.0000051498		
36	85C	$0.0000006549	1	$0.0000006549		
37	4C	$0.0000010400	1	$0.0000010400		
38	361C	$0.0000000000	1.0629	$0.0000000000		
39	Expense	$0.0000000000				
40						
41	**ISUP SIGNAL SWITCHING**					
42	377C	$0.0011002615	1.2626	$0.0013891917		
43	361C	$0.0012177831	1.0629	$0.0012943617		
44	Expense	$0.0001476061				

Section I - Signaling
SS7 STP-Inv & Exp Development

	A	B	C	D	E	F	G
1	Qwest Defaults 7/20/01 10:04:18 AM						
2							
3	South Dakota						
4							
5			**Account Code**		**Investment**	**Invst Loading**	**Loaded Invst or Exp per Port**
6						AP p13 cE	cE*cF
7	EF&I Capital Investment/Port:		**377C**	D15/C19	$408.35		
8	Total 1999 Software Investment/Port:		**377**	D16/C19	$7,814.77		
9	EF&I Patch Panel & Cabling/Port:		**377C**		$159.02		
10	**Total 1999 Investment/STP Port**			E7+E8+E9	$8,382.14	1.2626	**$ 10,583.30**
11							
12							
13	**1999 STP Investments per Port and Getting Started Cost Calculations**						
14							
15	EF&I Capital Investment/Port:			$315.25			
16	Software Investment/Port:			$6,033.00			
17							
18							
19	Percent Working 12/95		**0.772 STP Port Average Fill**				
20							
21	Note 2: Calculation of Patch Panel Utilization Factor						
22				Ports	Patch Pnl		
23				32	48		
24				48	48		
25				64	72		
26				96	96		
27				128	144		
28					Patch Pnl UF		
29	slope				1.02		
30	slope+1				2.02		
31	Intercept				6.41		
32	Area under slope of STP ports installed				8461.24		
33	Area of Patch Panel ports installed				13168.55		
34	Best Fit Ratio of installed STP ports to installed Patch Panel ports				**0.64**		

Section I - Signaling
SS7 STP-Inv & Exp Development

Cell: A9
Comment: EF&I Patch Panel & Cabling per Port Investment - Calculated by

419.16/24 - The $419.16 are the '96 costs from network. The 24 equates to the plugs that go into the patch panel (they have to be bought in lots of 24).

+

(3400/2)/24 - The $3,400 is the cost of a frame cabinet that has two sides = 48 patch panel plug ins (thus the 2) and then by 24 again in order to get to a cost of a single plug in.

+

(222/2)/8 - The $222 is the total cost of cabling for a whole cabinet. (One port's worth of cabling for BOTH sides - again both sides explaining the 2). The 8 is the capacity.

Divided by

The Patch Panel Utilization factor.

Cell: C19
Comment: Percent Working 12/95 = (Total Signaling Terminals(STs) in use as of 11/94 + additional STs to be used in 1995)/(Total STs installed as of 11/94 + additional STs to be installed in 1995)
Percent Working 12/95 = (2333 + 80 + 80)/(3095 + 135)=0.772

Section J - Shared Transport
ST - Develop Total Prod Costs

	A	B	C	D	E	F	G	H
1		Qwest Defaults 7/20/01 10:04:18 AM						
2					Shared Transport per MOU			
3	Row	South Dakota	Source or Calculation	Factor Value (AP p1 cB)	Switching	Transport	Direct Expenses	Total
4				A	B	C	D	E = B+D+C
5	1	**Investment**	sJ p2 cD		0.003561	0.002222		0.005782
6	2							
7	3	Investment Based Costs (IBC)	sJ p2 cK		0.000713	0.000415		0.001128
8	4	Element Specific Expenses	sE p5 E8				0.000277	0.000277
9	5	***Total IBC + Element Specific Expenses***	***r3 + r4***		0.000713	0.000415	0.000277	0.001405
10	6							
11	7	***Directly Assigned***						
12	8	Product Management Expense	cA*r5	0.02557	0.000018	0.000011	0.000007	0.000036
13	9	Sales Expense	cA*r5	0.00922	0.000007	0.000004	0.000003	0.000013
14	10	Product Advertising Expense	cA*r5	0.00000	0.000000	0.000000	0.000000	0.000000
15	11	Business Fees (Other Operating Taxes)	cA*(r5+r8:r10)	0.00203	0.000001	0.000001	0.000001	0.000003
16	12	***Directly Assigned Costs***	***Sum r8:r11***		0.000026	0.000015	0.000010	0.000052
17	13							
18	14	***Total Direct***	***r5 + r12***		0.000739	0.000431	0.000287	0.001457
19	15							
20	16	***Directly Attributed***						
21	17	Network Operations	cA*r14	0.04088	0.000030	0.000018	0.000012	0.000060
22	18	Network Support Assets	cA*r14	0.01536	0.000011	0.000007	0.000004	0.000022
23	19	General Support Assets	cA*r14	0.06951	0.000051	0.000030	0.000020	0.000101
24	20	General Purpose Computers	cA*r14	0.03471	0.000026	0.000015	0.000010	0.000051
25	21	Uncollectible - Interconnect	cA*r14	0.00040	0.000000	0.000000	0.000000	0.000001
26	22	Accounting and Finance Expense	cA*r14	0.00884	0.000007	0.000004	0.000003	0.000013
27	23	Human Resources Expense	cA*r14	0.00814	0.000006	0.000004	0.000002	0.000012
28	24	Information Management Expense	cA*r14	0.05701	0.000042	0.000025	0.000016	0.000083
29	25	Intangibles	cA*r14	0.00209	0.000002	0.000001	0.000001	0.000003
30	26	***Total Directly Attributed Costs***	***Sum r17:r25***		0.000175	0.000102	0.000068	0.000345
31	27							
32	28	***Total Element Long Run Incremental Costs***	***r 14 + r26***		0.000914	0.000533	0.000355	0.001802
33	29							
34	30	***Common***						
35	31	Executive Expense	cA*r28	0.00780	0.000007	0.000004	0.000003	0.000014
36	32	Planning Expense	cA*r28	0.00058	0.000001	0.000000	0.000000	0.000001
37	33	External Relations Expense	cA*r28	0.01303	0.000012	0.000007	0.000005	0.000023
38	34	Legal Expense	cA*r28	0.00615	0.000006	0.000003	0.000002	0.000011
39	35	Other Procurement Expense	cA*r28	0.00236	0.000002	0.000001	0.000001	0.000004
40	36	Research and Development Expense	cA*r28	0.00004	0.000000	0.000000	0.000000	0.000000
41	37	Other General and Admin Exp	cA*r28	0.01521	0.000014	0.000008	0.000005	0.000027
42	38	***Total Common Costs***	***Sum r31:r37***		0.000041	0.000024	0.000016	0.000081
43	39							
44	40	***TELRIC + Common***	***r27 + r38***		**0.000956**	**0.000557**	**0.000371**	**0.001883**
45								
46								
47	c = column, r = row, s = section, p = page, AP = Appendix							

Section J - Shared Transport
ST -Investment Cost Calculation

	A	B	C	D	E	F	G	H	I	J	K
1	Qwest Defaults 7/20/01 10:04:18 AM										
2	South Dakota					**Shared Transport**					
3	**Acct**	**FRC**	**Account Name**	**Investment**	**Depreciation**	**Cost of Money**	**Income Tax**	**Ad Valorem**	**Maintenance**	**Switch RTU**	**Total Capital Costs**
4				sJ p5 cN	cD*(AP p7 cA)/12	cD*(AP p7 cB)/12	cD*(AP p7 cC)/12	cD*(AP p7 cD)/12	cD*(AP p7 cE)/12	cD*(AP p1 B5)	sum(cE:cJ)
5	**Switched Transport per MOU**										
6			**Switched**								
7		20C	Land	0.000005	0.000000	0.000000	0.000000	0.000000	0.000000		0.000001
8		110C	Building	0.000176	0.000005	0.000013	0.000005	0.000002	0.000004		0.000028
9	sE p6 E7	361C	General Purpose Comp.	0.000111	0.000018	0.000005	0.000002	0.000001	0.000000		0.000027
10		377C	Other Digital Equipment	0.003269	0.000356	0.000149	0.000056	0.000028	0.000068	0.000000	0.000657
11			**Total**	**0.003561**	**0.000379**	**0.000167**	**0.000063**	**0.000031**	**0.000072**	**0.000000**	**0.000713**
12			**Transport**								
13		20C	Land	0.000002	0.000000	0.000000	0.000000	0.000000	0.000000		0.000000
14		110C	Building	0.000071	0.000002	0.000005	0.000002	0.000001	0.000002		0.000011
15		85C	UG Cbl Nonmetallic	0.000370	0.000026	0.000021	0.000008	0.000003	0.000003		0.000061
16		357C	Other Digital Equipment	0.000801	0.000088	0.000036	0.000014	0.000007	0.000026		0.000171
17		357CS	Other Digital Equipment	0.000524	0.000057	0.000024	0.000009	0.000005	0.000017		0.000112
18		4C	Conduit System	0.000369	0.000008	0.000024	0.000009	0.000003	0.000002		0.000046
19		845C	Buried Cbl Nonmetallic	0.000085	0.000005	0.000005	0.000002	0.000001	0.000001		0.000014
20			**Total**	**0.002222**	**0.000186**	**0.000115**	**0.000044**	**0.000019**	**0.000051**	**0.000000**	**0.000415**
21	**Investment Sources**										
22	Land= (AP p12 D10) * 377C + (AP p12 E10) * (57C+257C+357C+357CS)					Building = (AP p12 B10) * 377C + (AP p12 C10) * (57C+257C+357C+357CS)					
23											
24											
25	This spreadsheet uses the investment related factors from the Investment Factors spreadsheet to calculate monthly or per										
26	event depreciation, cost of money, income tax, ad Valorem and maintenance expenses for recurring cost elements. The										
27	land and buildings investments are calculated from the circuit and switching investments by applying the appropriate										
28	factors from the L & B Factors spreadsheet.										
29											

	A	B	C	D	E	F
1	Qwest Defaults 7/20/01 10:04:18 AM					
2	**Shared Transport**					
3	**South Dakota**					
4	**Description**	**Source**	**Default Value**	**Overrides** AP p16 cC	**This Run**	**Instructions**
5						
6	Miles (Default is from SLUS)	SLUS	7.6144		7.6144	Enter average air miles per trunk
7	End Office to End Office Weighting	Transport Model	54.46%		54.46%	Percent of total local trunks from end office to end office
8	End Office to Local Tandem Weighting	Transport Model	8.62%		8.62%	Percent of total local trunks from end office to local Tandem.
9	End Office to Access Tandem	Transport Model	36.92%		36.92%	Percent of total local trunks from end office to Access Tandem.
10						
11	The spreadsheet shows the Override data entered by the user in ICM's custom input screens. If the user has input override data, the spreadsheet will determine this and display the override data in the Overrides column. The this run column will show the Override or the Default Value if no override has been entered.					
12						
13						
14						

NOTICE: The information contained herein is confidential and proprietary and should not be disclosed to unauthorized persons.
It is meant for use by authorized representatives of Qwest, only.

Calculation of Fixed Investment per MOU

Qwest Defaults 7/20/01 10:04:18 AM

			IOF - FACILITIES				
	FRC		Set-Up Inv. per Call A	per Minute Inv. B	Average Hold Time C	Number of Legs D	Fixed Inv. per Minute of Use E=((A/C)+B)*D
			sJ p7 cG	sJ p7 cG	sD p13 E6		
End Office to End Office							
Fixed	357C		$ 0.00013222	$ 0.00058636	2.53	1.00	$ 0.000639
Fixed	357CS		$ 0.00005417	$ 0.00024023	2.53	1.00	$ 0.000262
Per Air Mile	357C	*	$ 0.00000105	$ 0.00000464	2.53	1.00	$ 0.000005
Per Air Mile	357CS	*	$ 0.00003540	$ 0.00015700	2.53	1.00	$ 0.000171
Per Air Mile	4C	*	$ 0.00006592	$ 0.00029232	2.53	1.00	$ 0.000318
Per Air Mile	845C	*	$ 0.00001514	$ 0.00006714	2.53	1.00	$ 0.000073
Per Air Mile	85C	*	$ 0.00006616	$ 0.00029339	2.53	1.00	$ 0.000320
End Office to Local Tandem							
Fixed	357C		$ 0.00013334	$ 0.00059133	2.53	2.00	$ 0.001288
Fixed	357CS		$ 0.00005463	$ 0.00024227	2.53	2.00	$ 0.000528
Per Air Mile	357C	*	$ 0.00000106	$ 0.00000468	2.53	1.00	$ 0.000005
Per Air Mile	357CS	*	$ 0.00003570	$ 0.00015833	2.53	1.00	$ 0.000172
Per Air Mile	4C	*	$ 0.00006648	$ 0.00029480	2.53	1.00	$ 0.000321
Per Air Mile	845C	*	$ 0.00001527	$ 0.00006771	2.53	1.00	$ 0.000074
Per Air Mile	85C	*	$ 0.00006672	$ 0.00029587	2.53	1.00	$ 0.000322
End Office to Access Tandem							
Fixed	357C		$ 0.00018864	$ 0.00083656	2.53	1.00	$ 0.000911
Fixed	357CS		$ 0.00007729	$ 0.00034274	2.53	1.00	$ 0.000373
Per Air Mile	357C	*	$ 0.00000149	$ 0.00000662	2.53	1.00	$ 0.000007
Per Air Mile	357CS	*	$ 0.00005051	$ 0.00022399	2.53	1.00	$ 0.000244
Per Air Mile	4C	*	$ 0.00009405	$ 0.00041706	2.53	1.00	$ 0.000454
Per Air Mile	845C	*	$ 0.00002160	$ 0.00009579	2.53	1.00	$ 0.000104
Per Air Mile	85C	*	$ 0.00009439	$ 0.00041858	2.53	1.00	$ 0.000456

* Per Air Mile investment from sJ p11 cG X Miles (sJ p3 E6)

Calculation of weighted total investments per MOU

Transport	FRC	Fixed M.O.U. Investments	Weighting	Total Investment/Unit
		F	G	H
		p4 cE summed by FRC		=F*G
End Office - End Office	357C	$ 0.000644	54.46%	**$ 0.000351**
	357CS	$ 0.000433	54.46%	**$ 0.000236**
	4C	$ 0.000318	54.46%	**$ 0.000173**
	845C	$ 0.000073	54.46%	**$ 0.000040**
	85C	$ 0.000320	54.46%	**$ 0.000174**
End Office - Local Tandem	357C	$ 0.001293	8.62%	**$ 0.000111**
	357CS	$ 0.000700	8.62%	**$ 0.000060**
	4C	$ 0.000321	8.62%	**$ 0.000028**
	845C	$ 0.000074	8.62%	**$ 0.000006**
	85C	$ 0.000322	8.62%	**$ 0.000028**
End Office - Access Tandem	357C	$ 0.000918	36.92%	**$ 0.000339**
	357CS	$ 0.000617	36.92%	**$ 0.000228**
	4C	$ 0.000454	36.92%	**$ 0.000168**
	845C	$ 0.000104	36.92%	**$ 0.000039**
	85C	$ 0.000456	36.92%	**$ 0.000168**
Total Transport	357C			**$ 0.000801**
	357CS			**$ 0.000524**
	4C			**$ 0.000369**
	845C			**$ 0.000085**
	85C			**$ 0.000370**

Qwest Defaults 7/20/01 10:04:18 AM

Elements Switching	FRC	Tandem Investment per MOU	Weighting	Total Investment/Unit
		I	J	K
		sD p8 M27		=I*J
End Office - End Office	377C	$ -	54%	$ -
End Office - Local Tandem	377C	$ 0.007179	9%	**$ 0.000619**
End Office - Access Tandem	377C	$ 0.007179	37%	**$ 0.002651**
Total Switching	377C			**$ 0.003269**

Cell: L5
Comment: Column F - 357C and 357CS investments are total of fixed and per air mile investments which was converted to fixed in column E. All other accounts = column E.

	A	B	C	D	E	F	G
1	Qwest Defaults 7/20/01 10:04:18 AM					South Dakota	
2	Type of Costs	Mileage Bands	Fixed or Variable	FRC	TOTAL DIRECT	NETWORK SUPPORT	Total
3							
4	**End Office to End Office**						
5	Conversation Minute	Average	Fixed	357C	0.00058439	0.00000197	0.00058636
6	Conversation Minute	Average	Fixed	357CS	0.00024023	0.00000000	0.00024023
7	Conversation Minute	Average	Per Air Mile	357C	0.00000052	0.00000009	0.00000061
8	Conversation Minute	Average	Per Air Mile	357CS	0.00002062	0.00000000	0.00002062
9	Conversation Minute	Average	Per Air Mile	4C	0.00003839	0.00000000	0.00003839
10	Conversation Minute	Average	Per Air Mile	845C	0.00000591	0.00000291	0.00000882
11	Conversation Minute	Average	Per Air Mile	85C	0.00002582	0.00001272	0.00003853
12	Setup Time	Average	Fixed	357C	0.00013178	0.00000044	0.00013222
13	Setup Time	Average	Fixed	357CS	0.00005417	0.00000000	0.00005417
14	Setup Time	Average	Per Air Mile	357C	0.00000012	0.00000002	0.00000014
15	Setup Time	Average	Per Air Mile	357CS	0.00000465	0.00000000	0.00000465
16	Setup Time	Average	Per Air Mile	4C	0.00000866	0.00000000	0.00000866
17	Setup Time	Average	Per Air Mile	845C	0.00000133	0.00000066	0.00000199
18	Setup Time	Average	Per Air Mile	85C	0.00000582	0.00000287	0.00000869
19							
20	**End Office to Tandem**						
21	Conversation Minute	Average	Fixed	357C	0.00058934	0.00000199	0.00059133
22	Conversation Minute	Average	Fixed	357CS	0.00024227	0.00000000	0.00024227
23	Conversation Minute	Average	Per Air Mile	357C	0.00000053	0.00000009	0.00000061
24	Conversation Minute	Average	Per Air Mile	357CS	0.00002079	0.00000000	0.00002079
25	Conversation Minute	Average	Per Air Mile	4C	0.00003872	0.00000000	0.00003872
26	Conversation Minute	Average	Per Air Mile	845C	0.00000596	0.00000293	0.00000889
27	Conversation Minute	Average	Per Air Mile	85C	0.00002603	0.00001282	0.00003886
28	Setup Time	Average	Fixed	357C	0.00013290	0.00000045	0.00013334
29	Setup Time	Average	Fixed	357CS	0.00005463	0.00000000	0.00005463
30	Setup Time	Average	Per Air Mile	357C	0.00000012	0.00000002	0.00000014
31	Setup Time	Average	Per Air Mile	357CS	0.00000469	0.00000000	0.00000469
32	Setup Time	Average	Per Air Mile	4C	0.00000873	0.00000000	0.00000873
33	Setup Time	Average	Per Air Mile	845C	0.00000134	0.00000066	0.00000201
34	Setup Time	Average	Per Air Mile	85C	0.00000587	0.00000289	0.00000876
35							
36	**End Office to Access Tandem**						
37	Conversation Minute	Average	Fixed	357C	0.00083375	0.00000281	0.00083656
38	Conversation Minute	Average	Fixed	357CS	0.00034274	0.00000000	0.00034274
39	Conversation Minute	Average	Per Air Mile	357C	0.00000075	0.00000012	0.00000087
40	Conversation Minute	Average	Per Air Mile	357CS	0.00002942	0.00000000	0.00002942
41	Conversation Minute	Average	Per Air Mile	4C	0.00005477	0.00000000	0.00005477
42	Conversation Minute	Average	Per Air Mile	845C	0.00000843	0.00000415	0.00001258
43	Conversation Minute	Average	Per Air Mile	85C	0.00003683	0.00001814	0.00005497
44	Setup Time	Average	Fixed	357C	0.00018801	0.00000063	0.00018864
45	Setup Time	Average	Fixed	357CS	0.00007729	0.00000000	0.00007729
46	Setup Time	Average	Per Air Mile	357C	0.00000017	0.00000003	0.00000020
47	Setup Time	Average	Per Air Mile	357CS	0.00000663	0.00000000	0.00000663
48	Setup Time	Average	Per Air Mile	4C	0.00001235	0.00000000	0.00001235
49	Setup Time	Average	Per Air Mile	845C	0.00000190	0.00000094	0.00000284
50	Setup Time	Average	Per Air Mile	85C	0.00000831	0.00000409	0.00001240
51	SOURCE: Transport Model						
52	TYPE: DS0 Switched Circuits (Does not include D4 Channel Banks						
53	therefore is not synonymous with DS0 Private Line Circuits.)						
54							
55	**This spreadsheet summarizes the results of the Transport Model. Fixed is not an economic**						
56	**term. Fixed refers to investments that do not change based on distance.**						
57							
58							

Section K - Unbundled Dedicated InterofficeTransport
DS0 UDIT- Dev Total Prod Costs

Row	Qwest Defaults 7/20/01 10:04:18 AM South Dakota	Source or Calculation	Factor Value [AP p1 cB]	DS0 UDIT Over 0 to 8 Miles, Fixed	Over 0 to 8 Miles, Per Air Mile	Over 8 to 25 Miles, Fixed	Over 8 to 25 Miles, Per Air Mile	Over 25 to 50 Miles, Fixed	Over 25 to 50 Miles, Per Air Mile	Over 50 Miles, Fixed	Over 50 Miles, Per Air Mile
			A	B	C	D	E	F	G	H	I
1	**Investment**	sK p8-9 cD Total		1073.1193	34.0131	1083.2747	25.2395	1083.3698	10.6405	1076.3605	3.3880
2											
3	Investment Based Costs (IBC)	sK p8-9 cJ Total		18.87421	0.45247	19.05252	0.33202	19.05419	0.14165	18.93111	0.04578
4	Element Specific Expenses	AP p3 F41*r3		0.08123	0.00195	0.08200	0.00143	0.08201	0.00061	0.08148	0.00020
5	***Total IBC + Element Specific Expenses***	*r3 + r4*		18.95544	0.45442	19.13452	0.33345	19.13620	0.14226	19.01259	0.04598
6											
7	***Directly Assigned***										
8	Product Management Expense	cA*r5	0.02557	0.48460	0.01162	0.48918	0.00852	0.48922	0.00364	0.48606	0.00118
9	Sales Expense	cA*r5	0.00922	0.17486	0.00419	0.17651	0.00308	0.17652	0.00131	0.17538	0.00042
10	Product Advertising Expense	cA*r5	0.00000	0.00000	0.00000	0.00000	0.00000	0.00000	0.00000	0.00000	0.00000
11	Business Fees (Other Operating Taxes)	cA*(r5+r8:r10)	0.00203	0.03972	0.00095	0.04010	0.00070	0.04010	0.00030	0.03984	0.00010
12	***Directly Assigned Costs***	*Sum r8:r11*		0.69918	0.01676	0.70578	0.01230	0.70585	0.00525	0.70129	0.00170
13											
14	***Total Direct***	*r5 + r12*		19.65462	0.47118	19.84031	0.34575	19.84205	0.14751	19.71388	0.04767
15											
16	***Directly Attributed***										
17	Network Operations	cA*r14	0.04088	0.80348	0.01926	0.81107	0.01413	0.81114	0.00603	0.80591	0.00195
18	Network Support Assets	cA*r14	0.01536	0.30197	0.00724	0.30483	0.00531	0.30485	0.00227	0.30288	0.00073
19	General Support Assets	cA*r14	0.06951	1.36615	0.03275	1.37905	0.02403	1.37917	0.01025	1.37027	0.00331
20	General Purpose Computers	cA*r14	0.03471	0.68229	0.01636	0.68873	0.01200	0.68880	0.00512	0.68435	0.00165
21	Uncollectible - Interconnect	cA*r14	0.00040	0.00788	0.00019	0.00795	0.00014	0.00795	0.00006	0.00790	0.00002
22	Accounting and Finance Expense	cA*r14	0.00884	0.17372	0.00416	0.17536	0.00306	0.17538	0.00130	0.17425	0.00042
23	Human Resources Expense	cA*r14	0.00814	0.16008	0.00384	0.16159	0.00282	0.16161	0.00120	0.16056	0.00039
24	Information Management Expense	cA*r14	0.05701	1.12050	0.02686	1.13108	0.01971	1.13118	0.00841	1.12388	0.00272
25	Intangibles	cA*r14	0.00209	0.04110	0.00099	0.04149	0.00072	0.04149	0.00031	0.04122	0.00010
26	***Total Directly Attributed Costs***	*Sum r17:r25*		4.65717	0.11165	4.70117	0.08192	4.70158	0.03495	4.67121	0.01130
27											
28	***Total Element Long Run Incremental Costs***	*r14 + r26*		**24.31179**	**0.58283**	**24.54148**	**0.42767**	**24.54363**	**0.18246**	**24.38510**	**0.05897**
29											
30	***Common***										
31	Executive Expense	cA*r28	0.00780	0.18975	0.00455	0.19154	0.00334	0.19156	0.00142	0.19032	0.00046
32	Planning Expense	cA*r28	0.00058	0.01410	0.00034	0.01424	0.00025	0.01424	0.00011	0.01415	0.00003
33	External Relations Expense	cA*r28	0.01303	0.31676	0.00759	0.31975	0.00557	0.31978	0.00238	0.31771	0.00077
34	Legal Expense	cA*r28	0.00615	0.14948	0.00358	0.15089	0.00263	0.15090	0.00112	0.14993	0.00036
35	Other Procurement Expense	cA*r28	0.00236	0.05736	0.00138	0.05790	0.00101	0.05791	0.00043	0.05753	0.00014
36	Research and Development Expense	cA*r28	0.00004	0.00088	0.00002	0.00088	0.00002	0.00088	0.00001	0.00088	0.00000
37	Other General and Admin Exp	cA*r28	0.01521	0.36982	0.00887	0.37332	0.00651	0.37335	0.00278	0.37094	0.00090
38	***Total Common Costs***	*Sum r31:r37*		**1.09815**	**0.02633**	**1.10852**	**0.01932**	**1.10862**	**0.00824**	**1.10146**	**0.00266**
39											
40	***TELRIC + Common***	*r27 + r38*		**25.41**	**0.61**	**25.65**	**0.45**	**25.65**	**0.19**	**25.49**	**0.06**

c = column, r = row, s = section, p = page, AP = Appendix

Row	Qwest Defaults 7/20/01 10:04:18 AM South Dakota	Source or Calculation	Factor Value [AP p1 cB]	DS1 UDIT Over 0 to 8 Miles, Fixed	Over 0 to 8 Miles, Per Air Mile	Over 8 to 25 Miles, Fixed	Over 8 to 25 Miles, Per Air Mile	Over 25 to 50 Miles, Fixed	Over 25 to 50 Miles, Per Air Mile	Over 50 Miles, Fixed	Over 50 Miles, Per Air Mile
			A	D	E	F	G	H	I	J	K
1	**Investment**	sK p10-11 cD Total		1587.92	199.66	1624.20	202.47	1705.48	112.57	1646.35	47.87
2											
3	Investment Based Costs (IBC)	sK p10-11 cJ Total		27.91732	2.67942	28.55444	2.66791	29.98161	1.50179	28.94333	0.64625
4	Element Specific Expenses	AP p3 F41*r3		0.12016	0.01153	0.12290	0.01148	0.12904	0.00646	0.12457	0.00278
5	***Total IBC + Element Specific Expenses***	*r3 + r4*		28.03747	2.69095	28.67734	2.67939	30.11066	1.50826	29.06790	0.64904
6											
7	***Directly Assigned***										
8	Product Management Expense	cA*r5	0.02557	0.71678	0.06879	0.73314	0.06850	0.76979	0.03856	0.74313	0.01659
9	Sales Expense	cA*r5	0.00922	0.25863	0.02482	0.26454	0.02472	0.27776	0.01391	0.26814	0.00599
10	Product Advertising Expense	cA*r5	0.00000	0.00000	0.00000	0.00000	0.00000	0.00000	0.00000	0.00000	0.00000
11	Business Fees (Other Operating Taxes)	cA*(r5+r8:r10)	0.00203	0.05875	0.00564	0.06010	0.00561	0.06310	0.00316	0.06091	0.00136
12	***Directly Assigned Costs***	*Sum r8:r11*		1.03417	0.09926	1.05777	0.09883	1.11064	0.05563	1.07218	0.02394
13											
14	***Total Direct***	*r5 + r12*		29.07165	2.79020	29.73511	2.77822	31.22130	1.56389	30.14008	0.67298
15											
16	***Directly Attributed***										
17	Network Operations	cA*r14	0.04088	1.18845	0.11406	1.21557	0.11357	1.27633	0.06393	1.23213	0.02751
18	Network Support Assets	cA*r14	0.01536	0.44666	0.04287	0.45685	0.04268	0.47968	0.02403	0.46307	0.01034
19	General Support Assets	cA*r14	0.06951	2.02070	0.19394	2.06682	0.19311	2.17012	0.10870	2.09497	0.04678
20	General Purpose Computers	cA*r14	0.03471	1.00919	0.09686	1.03222	0.09644	1.08381	0.05429	1.04628	0.02336
21	Uncollectible - Interconnect	cA*r14	0.00040	0.01165	0.00112	0.01192	0.00111	0.01251	0.00063	0.01208	0.00027
22	Accounting and Finance Expense	cA*r14	0.00884	0.25696	0.02466	0.26282	0.02456	0.27596	0.01382	0.26640	0.00595
23	Human Resources Expense	cA*r14	0.00814	0.23678	0.02273	0.24218	0.02263	0.25429	0.01274	0.24548	0.00548
24	Information Management Expense	cA*r14	0.05701	1.65736	0.15907	1.69518	0.15838	1.77991	0.08916	1.71827	0.03837
25	Intangibles	cA*r14	0.00209	0.06079	0.00583	0.06218	0.00581	0.06529	0.00327	0.06303	0.00141
26	***Total Directly Attributed Costs***	*Sum r17:r25*		6.88854	0.66114	7.04575	0.65830	7.39790	0.37056	7.14171	0.15946
27											
28	***Total Element Long Run Incremental Costs***	*r 14 + r26*		**35.96019**	**3.45135**	**36.78086**	**3.43652**	**38.61920**	**1.93446**	**37.28179**	**0.83244**
29											
30	***Common***										
31	Executive Expense	cA*r28	0.00780	0.28067	0.02694	0.28707	0.02682	0.30142	0.01510	0.29098	0.00650
32	Planning Expense	cA*r28	0.00058	0.02086	0.00200	0.02134	0.00199	0.02240	0.00112	0.02163	0.00048
33	External Relations Expense	cA*r28	0.01303	0.46852	0.04497	0.47922	0.04477	0.50317	0.02520	0.48574	0.01085
34	Legal Expense	cA*r28	0.00615	0.22109	0.02122	0.22614	0.02113	0.23744	0.01189	0.22922	0.00512
35	Other Procurement Expense	cA*r28	0.00236	0.08484	0.00814	0.08678	0.00811	0.09111	0.00456	0.08796	0.00196
36	Research and Development Expense	cA*r28	0.00004	0.00130	0.00012	0.00132	0.00012	0.00139	0.00007	0.00134	0.00003
37	Other General and Admin Exp	cA*r28	0.01521	0.54701	0.05250	0.55950	0.05228	0.58746	0.02943	0.56712	0.01266
38	***Total Common Costs***	*Sum r31:r37*		**1.62430**	**0.15589**	**1.66136**	**0.15523**	**1.74440**	**0.08738**	**1.68399**	**0.03760**
39											
40	***TELRIC + Common***	*r27 + r38*		**37.58**	**3.61**	**38.44**	**3.59**	**40.36**	**2.02**	**38.97**	**0.87**

c = column, r = row, s = section, p = page, AP = Appendix

Section K - Unbundled Dedicated InterofficeTransport
DS3 UDIT- Dev Total Prod Costs

Row	Qwest Defaults 7/20/01 10:04:18 AM South Dakota	Source or Calculation	Factor Value [AP p1 cB]	DS3 UDIT Over 0 to 8 Miles, Fixed	Over 0 to 8 Miles, Per Air Mile	Over 8 to 25 Miles, Fixed	Over 8 to 25 Miles, Per Air Mile	Over 25 to 50 Miles, Fixed	Over 25 to 50 Miles, Per Air Mile	Over 50 Miles, Fixed	Over 50 Miles, Per Air Mile
			A	D	E	F	G	H	I	J	K
1	**Investment**	sK p12-13 cD Total		$10,410.29	$3,386.25	$10,559.58	$1,146.15	$9,767.73	$1,312.41	$10,280.58	$893.29
2											
3	Investment Based Costs (IBC)	sK p12-13 cJ Total		182.8359	45.2790	185.4574	14.0891	171.5536	17.7761	180.5586	12.2425
4	Element Specific Expenses	AP p3 F41*r3		0.7869	0.1949	0.7982	0.0606	0.7384	0.0765	0.7771	0.0527
5	***Total IBC + Element Specific Expenses***	***r3 + r4***		183.6228	45.4739	186.2556	14.1497	172.2920	17.8526	181.3357	12.2952
6											
7	***Directly Assigned***										
8	Product Management Expense	cA*r5	0.02557	4.6944	1.1625	4.7617	0.3617	4.4047	0.4564	4.6359	0.3143
9	Sales Expense	cA*r5	0.00922	1.6938	0.4195	1.7181	0.1305	1.5893	0.1647	1.6727	0.1134
10	Product Advertising Expense	cA*r5	0.00000	0.0000	0.0000	0.0000	0.0000	0.0000	0.0000	0.0000	0.0000
11	Business Fees (Other Operating Taxes)	cA*(r5+r8:r10)	0.00203	0.3848	0.0953	0.3903	0.0297	0.3611	0.0374	0.3800	0.0258
12	***Directly Assigned Costs***	***Sum r8:r11***		6.7730	1.6773	6.8701	0.5219	6.3551	0.6585	6.6886	0.4535
13											
14	***Total Direct***	***r5 + r12***		190.3958	47.1512	193.1257	14.6716	178.6470	18.5111	188.0243	12.7487
15											
16	***Directly Attributed***										
17	Network Operations	cA*r14	0.04088	7.7834	1.9275	7.8950	0.5998	7.3031	0.7567	7.6865	0.5212
18	Network Support Assets	cA*r14	0.01536	2.9252	0.7244	2.9672	0.2254	2.7447	0.2844	2.8888	0.1959
19	General Support Assets	cA*r14	0.06951	13.2340	3.2774	13.4237	1.0198	12.4173	1.2867	13.0691	0.8861
20	General Purpose Computers	cA*r14	0.03471	6.6094	1.6368	6.7042	0.5093	6.2015	0.6426	6.5271	0.4426
21	Uncollectible - Interconnect	cA*r14	0.00040	0.0763	0.0189	0.0774	0.0059	0.0716	0.0074	0.0754	0.0051
22	Accounting and Finance Expense	cA*r14	0.00884	1.6829	0.4168	1.7070	0.1297	1.5790	0.1636	1.6619	0.1127
23	Human Resources Expense	cA*r14	0.00814	1.5507	0.3840	1.5729	0.1195	1.4550	0.1508	1.5314	0.1038
24	Information Management Expense	cA*r14	0.05701	10.8544	2.6881	11.0100	0.8364	10.1846	1.0553	10.7192	0.7268
25	Intangibles	cA*r14	0.00209	0.3981	0.0986	0.4039	0.0307	0.3736	0.0387	0.3932	0.0267
26	***Total Directly Attributed Costs***	***Sum r17:r25***		45.1144	11.1725	45.7612	3.4764	42.3305	4.3862	44.5525	3.0208
27											
28	***Total Element Long Run Incremental Costs***	***r 14 + r26***		235.5102	58.3237	238.8869	18.1481	220.9775	22.8973	232.5768	15.7695
29											
30	***Common***										
31	Executive Expense	cA*r28	0.00780	1.8381	0.4552	1.8645	0.1416	1.7247	0.1787	1.8152	0.1231
32	Planning Expense	cA*r28	0.00058	0.1366	0.0338	0.1386	0.0105	0.1282	0.0133	0.1349	0.0091
33	External Relations Expense	cA*r28	0.01303	3.0685	0.7599	3.1125	0.2365	2.8791	0.2983	3.0302	0.2055
34	Legal Expense	cA*r28	0.00615	1.4480	0.3586	1.4688	0.1116	1.3586	0.1408	1.4300	0.0970
35	Other Procurement Expense	cA*r28	0.00236	0.5556	0.1376	0.5636	0.0428	0.5214	0.0540	0.5487	0.0372
36	Research and Development Expense	cA*r28	0.00004	0.0085	0.0021	0.0086	0.0007	0.0080	0.0008	0.0084	0.0006
37	Other General and Admin Exp	cA*r28	0.01521	3.5825	0.8872	3.6339	0.2761	3.3614	0.3483	3.5379	0.2399
38	***Total Common Costs***	***Sum r31:r37***		10.6378	2.6344	10.7903	0.8197	9.9814	1.0343	10.5053	0.7123
39											
40	***TELRIC + Common***	***r27 + r38***		**$246.15**	**$60.96**	**$249.68**	**$18.97**	**$230.96**	**$23.93**	**$243.08**	**$16.48**

c = column, r = row, s = section, p = page, AP = Appendix

Section K - Unbundled Dedicated InterofficeTransport
OC3 UDIT- Dev Total Prod Costs

Row	Qwest Defaults 7/20/01 10:04:18 AM South Dakota	Source or Calculation	Factor Value [AP p1 cB]	OC3 UDIT Over 0 to 8 Miles, Fixed	Over 0 to 8 Miles, Per Air Mile	Over 8 to 25 Miles, Fixed	Over 8 to 25 Miles, Per Air Mile	Over 25 to 50 Miles, Fixed	Over 25 to 50 Miles, Per Air Mile	Over 50 Miles, Fixed	Over 50 Miles, Per Air Mile
			A	D	E	F	G	H	I	J	K
1	**Investment**	sK p14-15 cD Total		$33,571.53	$11,183.55	$33,810.71	$4,010.38	$32,496.10	$4,713.67	$33,330.05	$3,333.94
2											
3	Investment Based Costs (IBC)	sK p14-15 cJ Total		589.4525	157.5796	593.6524	50.2409	570.5682	65.5558	585.2122	45.7105
4	Element Specific Expenses	AP p3 F41*r3		2.5370	0.6782	2.5551	0.2162	2.4557	0.2822	2.5188	0.1967
5	***Total IBC + Element Specific Expenses***	*r3 + r4*		591.9895	158.2578	596.2074	50.4572	573.0239	65.8379	587.7310	45.9073
6											
7	***Directly Assigned***										
8	Product Management Expense	cA*r5	0.02557	15.1343	4.0459	15.2422	1.2899	14.6495	1.6832	15.0255	1.1736
9	Sales Expense	cA*r5	0.00922	5.4609	1.4599	5.4998	0.4654	5.2859	0.6073	5.4216	0.4235
10	Product Advertising Expense	cA*r5	0.00000	0.0000	0.0000	0.0000	0.0000	0.0000	0.0000	0.0000	0.0000
11	Business Fees (Other Operating Taxes)	cA*(r5+r8:r10)	0.00203	1.2406	0.3316	1.2494	0.1057	1.2008	0.1380	1.2316	0.0962
12	***Directly Assigned Costs***	*Sum r8:r11*		21.8358	5.8374	21.9913	1.8611	21.1362	2.4285	21.6787	1.6933
13											
14	***Total Direct***	*r5 + r12*		613.8253	164.0952	618.1988	52.3183	594.1601	68.2664	609.4097	47.6006
15											
16	***Directly Attributed***										
17	Network Operations	cA*r14	0.04088	25.0932	6.7082	25.2720	2.1388	24.2893	2.7907	24.9127	1.9459
18	Network Support Assets	cA*r14	0.01536	9.4308	2.5212	9.4980	0.8038	9.1287	1.0488	9.3630	0.7313
19	General Support Assets	cA*r14	0.06951	42.6655	11.4059	42.9695	3.6365	41.2987	4.7450	42.3586	3.3086
20	General Purpose Computers	cA*r14	0.03471	21.3083	5.6964	21.4601	1.8162	20.6256	2.3698	21.1550	1.6524
21	Uncollectible - Interconnect	cA*r14	0.00040	0.2460	0.0658	0.2478	0.0210	0.2382	0.0274	0.2443	0.0191
22	Accounting and Finance Expense	cA*r14	0.00884	5.4255	1.4504	5.4641	0.4624	5.2516	0.6034	5.3864	0.4207
23	Human Resources Expense	cA*r14	0.00814	4.9994	1.3365	5.0350	0.4261	4.8392	0.5560	4.9634	0.3877
24	Information Management Expense	cA*r14	0.05701	34.9938	9.3550	35.2432	2.9826	33.8727	3.8918	34.7421	2.7137
25	Intangibles	cA*r14	0.00209	1.2836	0.3431	1.2927	0.1094	1.2425	0.1428	1.2744	0.0995
26	***Total Directly Attributed Costs***	*Sum r17:r25*		145.4462	38.8824	146.4825	12.3968	140.7865	16.1758	144.3999	11.2790
27											
28	***Total Element Long Run Incremental Costs***	*r14 + r26*		759.2715	202.9777	764.6813	64.7152	734.9467	84.4421	753.8096	58.8795
29											
30	***Common***										
31	Executive Expense	cA*r28	0.00780	5.9260	1.5842	5.9683	0.5051	5.7362	0.6591	5.8834	0.4595
32	Planning Expense	cA*r28	0.00058	0.4405	0.1178	0.4436	0.0375	0.4264	0.0490	0.4373	0.0342
33	External Relations Expense	cA*r28	0.01303	9.8925	2.6446	9.9630	0.8432	9.5756	1.1002	9.8214	0.7671
34	Legal Expense	cA*r28	0.00615	4.6682	1.2480	4.7015	0.3979	4.5187	0.5192	4.6347	0.3620
35	Other Procurement Expense	cA*r28	0.00236	1.7914	0.4789	1.8041	0.1527	1.7340	0.1992	1.7785	0.1389
36	Research and Development Expense	cA*r28	0.00004	0.0273	0.0073	0.0275	0.0023	0.0265	0.0030	0.0271	0.0021
37	Other General and Admin Exp	cA*r28	0.01521	11.5498	3.0876	11.6320	0.9844	11.1797	1.2845	11.4667	0.8957
38	***Total Common Costs***	*Sum r31:r37*		34.2957	9.1684	34.5401	2.9231	33.1970	3.8142	34.0490	2.6595
39											
40	***TELRIC + Common***	*r27 + r38*		$793.57	$212.15	$799.22	$67.64	$768.14	$88.26	$787.86	$61.54

c = column, r = row, s = section, p = page, AP = Appendix

Section K - Unbundled Dedicated InterofficeTransport
OC12 UDIT- Dev Total Prod Costs

Row	Qwest Defaults 7/20/01 10:04:18 AM South Dakota	Source or Calculation	Factor Value [AP p1 cB]	OC12 UDIT Over 0 to 8 Miles, Fixed	Over 0 to 8 Miles, Per Air Mile	Over 8 to 25 Miles, Fixed	Over 8 to 25 Miles, Per Air Mile	Over 25 to 50 Miles, Fixed	Over 25 to 50 Miles, Per Air Mile	Over 50 Miles, Fixed	Over 50 Miles, Per Air Mile
			A	D	E	F	G	H	I	J	K
1	**Investment**	sK p16-17 cD Total		$93,648.28	$5,544.31	$93,648.28	$5,858.18	$93,648.28	$6,004.30	$93,648.28	$6,789.69
2											
3	Investment Based Costs (IBC)	sK p16-17 cJ Total		1644.2703	68.8249	1644.2703	69.9462	1644.2703	78.0360	1644.2703	91.8174
4	Element Specific Expenses	AP p3 F41*r3		7.0769	0.2962	7.0769	0.3010	7.0769	0.3359	7.0769	0.3952
5	***Total IBC + Element Specific Expenses***	*r3 + r4*		1651.3472	69.1211	1651.3472	70.2472	1651.3472	78.3718	1651.3472	92.2126
6											
7	***Directly Assigned***										
8	Product Management Expense	cA*r5	0.02557	42.2170	1.7671	42.2170	1.7959	42.2170	2.0036	42.2170	2.3574
9	Sales Expense	cA*r5	0.00922	15.2330	0.6376	15.2330	0.6480	15.2330	0.7229	15.2330	0.8506
10	Product Advertising Expense	cA*r5	0.00000	0.0000	0.0000	0.0000	0.0000	0.0000	0.0000	0.0000	0.0000
11	Business Fees (Other Operating Taxes)	cA*(r5+r8:r10)	0.00203	3.4605	0.1448	3.4605	0.1472	3.4605	0.1642	3.4605	0.1932
12	***Directly Assigned Costs***	*Sum r8:r11*		60.9106	2.5496	60.9106	2.5911	60.9106	2.8908	60.9106	3.4013
13											
14	***Total Direct***	*r5 + r12*		1712.2578	71.6707	1712.2578	72.8383	1712.2578	81.2626	1712.2578	95.6139
15											
16	***Directly Attributed***										
17	Network Operations	cA*r14	0.04088	69.9973	2.9299	69.9973	2.9776	69.9973	3.3220	69.9973	3.9087
18	Network Support Assets	cA*r14	0.01536	26.3071	1.1011	26.3071	1.1191	26.3071	1.2485	26.3071	1.4690
19	General Support Assets	cA*r14	0.06951	119.0150	4.9817	119.0150	5.0628	119.0150	5.6484	119.0150	6.6459
20	General Purpose Computers	cA*r14	0.03471	59.4392	2.4880	59.4392	2.5285	59.4392	2.8209	59.4392	3.3191
21	Uncollectible - Interconnect	cA*r14	0.00040	0.6863	0.0287	0.6863	0.0292	0.6863	0.0326	0.6863	0.0383
22	Accounting and Finance Expense	cA*r14	0.00884	15.1342	0.6335	15.1342	0.6438	15.1342	0.7183	15.1342	0.8451
23	Human Resources Expense	cA*r14	0.00814	13.9458	0.5837	13.9458	0.5932	13.9458	0.6619	13.9458	0.7787
24	Information Management Expense	cA*r14	0.05701	97.6149	4.0859	97.6149	4.1525	97.6149	4.6327	97.6149	5.4509
25	Intangibles	cA*r14	0.00209	3.5806	0.1499	3.5806	0.1523	3.5806	0.1699	3.5806	0.1999
26	***Total Directly Attributed Costs***	*Sum r17:r25*		405.7203	16.9824	405.7203	17.2591	405.7203	19.2552	405.7203	22.6558
27											
28	***Total Element Long Run Incremental Costs***	*r 14 + r26*		2117.9781	88.6531	2117.9781	90.0974	2117.9781	100.5178	2117.9781	118.2697
29											
30	***Common***										
31	Executive Expense	cA*r28	0.00780	16.5306	0.6919	16.5306	0.7032	16.5306	0.7845	16.5306	0.9231
32	Planning Expense	cA*r28	0.00058	1.2287	0.0514	1.2287	0.0523	1.2287	0.0583	1.2287	0.0686
33	External Relations Expense	cA*r28	0.01303	27.5951	1.1551	27.5951	1.1739	27.5951	1.3096	27.5951	1.5409
34	Legal Expense	cA*r28	0.00615	13.0220	0.5451	13.0220	0.5539	13.0220	0.6180	13.0220	0.7272
35	Other Procurement Expense	cA*r28	0.00236	4.9970	0.2092	4.9970	0.2126	4.9970	0.2372	4.9970	0.2790
36	Research and Development Expense	cA*r28	0.00004	0.0763	0.0032	0.0763	0.0032	0.0763	0.0036	0.0763	0.0043
37	Other General and Admin Exp	cA*r28	0.01521	32.2179	1.3486	32.2179	1.3705	32.2179	1.5290	32.2179	1.7991
38	***Total Common Costs***	*Sum r31:r37*		95.6675	4.0044	95.6675	4.0696	95.6675	4.5403	95.6675	5.3422
39											
40	***TELRIC + Common***	*r27 + r38*		$2,213.65	$92.66	$2,213.65	$94.17	$2,213.65	$105.06	$2,213.65	$123.61

c = column, r = row, s = section, p = page, AP = Appendix

Section K - Unbundled Dedicated InterofficeTransport
OC48 UDIT- Dev Total Prod Costs

Row	Qwest Defaults 7/20/01 10:04:18 AM South Dakota	Source or Calculation	Factor Value [AP p1 cB]	OC48 UDIT Over 0 to 8 Miles, Fixed	Over 0 to 8 Miles, Per Air Mile	Over 8 to 25 Miles, Fixed	Over 8 to 25 Miles, Per Air Mile	Over 25 to 50 Miles, Fixed	Over 25 to 50 Miles, Per Air Mile	Over 50 Miles, Fixed	Over 50 Miles, Per Air Mile
			A	D	E	F	G	H	I	J	K
1	**Investment**	sK p18-19 cD Total		$308,887.73	$18,481.03	$308,887.73	$19,561.03	$308,887.73	$21,171.88	$308,887.73	$25,278.47
2											
3	Investment Based Costs (IBC)	sK p18-19 cJ Total		5423.4325	229.4164	5423.4325	233.7226	5423.4325	280.4434	5423.4325	352.5178
4	Element Specific Expenses	AP p3 F41*r3		23.3425	0.9874	23.3425	1.0059	23.3425	1.2070	23.3425	1.5172
5	***Total IBC + Element Specific Expenses***	*r3 + r4*		5446.7749	230.4038	5446.7749	234.7286	5446.7749	281.6505	5446.7749	354.0351
6											
7	***Directly Assigned***										
8	Product Management Expense	cA*r5	0.02557	139.2480	5.8903	139.2480	6.0009	139.2480	7.2005	139.2480	9.0510
9	Sales Expense	cA*r5	0.00922	50.2442	2.1254	50.2442	2.1653	50.2442	2.5981	50.2442	3.2658
10	Product Advertising Expense	cA*r5	0.00000	0.0000	0.0000	0.0000	0.0000	0.0000	0.0000	0.0000	0.0000
11	Business Fees (Other Operating Taxes)	cA*(r5+r8:r10)	0.00203	11.4142	0.4828	11.4142	0.4919	11.4142	0.5902	11.4142	0.7419
12	***Directly Assigned Costs***	*Sum r8:r11*		200.9064	8.4985	200.9064	8.6581	200.9064	10.3888	200.9064	13.0587
13											
14	***Total Direct***	*r5 + r12*		5647.6813	238.9023	5647.6813	243.3866	5647.6813	292.0392	5647.6813	367.0938
15											
16	***Directly Attributed***										
17	Network Operations	cA*r14	0.04088	230.8778	9.7664	230.8778	9.9497	230.8778	11.9386	230.8778	15.0068
18	Network Support Assets	cA*r14	0.01536	86.7708	3.6705	86.7708	3.7394	86.7708	4.4869	86.7708	5.6400
19	General Support Assets	cA*r14	0.06951	392.5569	16.6055	392.5569	16.9172	392.5569	20.2990	392.5569	25.5158
20	General Purpose Computers	cA*r14	0.03471	196.0532	8.2932	196.0532	8.4489	196.0532	10.1378	196.0532	12.7433
21	Uncollectible - Interconnect	cA*r14	0.00040	2.2638	0.0958	2.2638	0.0976	2.2638	0.1171	2.2638	0.1471
22	Accounting and Finance Expense	cA*r14	0.00884	49.9185	2.1116	49.9185	2.1512	49.9185	2.5813	49.9185	3.2447
23	Human Resources Expense	cA*r14	0.00814	45.9985	1.9458	45.9985	1.9823	45.9985	2.3786	45.9985	2.9899
24	Information Management Expense	cA*r14	0.05701	321.9711	13.6197	321.9711	13.8753	321.9711	16.6490	321.9711	20.9278
25	Intangibles	cA*r14	0.00209	11.8102	0.4996	11.8102	0.5090	11.8102	0.6107	11.8102	0.7676
26	***Total Directly Attributed Costs***	*Sum r17:r25*		1338.2209	56.6080	1338.2209	57.6706	1338.2209	69.1988	1338.2209	86.9831
27											
28	***Total Element Long Run Incremental Costs***	*r 14 + r26*		6985.9022	295.5103	6985.9022	301.0572	6985.9022	361.2381	6985.9022	454.0768
29											
30	***Common***										
31	Executive Expense	cA*r28	0.00780	54.5242	2.3064	54.5242	2.3497	54.5242	2.8194	54.5242	3.5440
32	Planning Expense	cA*r28	0.00058	4.0527	0.1714	4.0527	0.1747	4.0527	0.2096	4.0527	0.2634
33	External Relations Expense	cA*r28	0.01303	91.0192	3.8502	91.0192	3.9225	91.0192	4.7066	91.0192	5.9162
34	Legal Expense	cA*r28	0.00615	42.9515	1.8169	42.9515	1.8510	42.9515	2.2210	42.9515	2.7918
35	Other Procurement Expense	cA*r28	0.00236	16.4819	0.6972	16.4819	0.7103	16.4819	0.8523	16.4819	1.0713
36	Research and Development Expense	cA*r28	0.00004	0.2516	0.0106	0.2516	0.0108	0.2516	0.0130	0.2516	0.0164
37	Other General and Admin Exp	cA*r28	0.01521	106.2670	4.4952	106.2670	4.5796	106.2670	5.4950	106.2670	6.9072
38	***Total Common Costs***	*Sum r31:r37*		315.5481	13.3480	315.5481	13.5985	315.5481	16.3169	315.5481	20.5103
39											
40	***TELRIC + Common***	*r27 + r38*		$7,301.45	$308.86	$7,301.45	$314.66	$7,301.45	$377.55	$7,301.45	$474.59

c = column, r = row, s = section, p = page, AP = Appendix

Section K - Unbundled Dedicated InterofficeTransport
EUDIT- Dev Total Prod Costs

Row	Qwest Defaults 7/20/01 10:04:18 AM South Dakota	Source or Calculation	Factor Value [AP p1 cB]	OC3 E-UDIT Central Office Node	OC12 E-UDIT Central Office Node	OCN E-UDIT OC48 E-UDIT Central Office Node	OC3 E-UDIT Remote Node	OC12 E-UDIT Remote Node	OC48 E-UDIT Remote Node
			A	F	G	F	G	F	G
1	**Investment**	sK p20 cD Total		$45,080.93	$65,769.81	$162,846.36	$23,652.02	$46,351.98	$145,504.18
2									
3	Investment Based Costs (IBC)	sK p20 cJ Total		633.1600	961.9560	2504.7354	379.2088	743.1533	2332.8432
4	Element Specific Expenses	AP p3 F41*r3		2.7251	4.1403	10.7804	1.6321	3.1985	10.0406
5	***Total IBC + Element Specific Expenses***	*r3 + r4*		635.8851	966.0963	2515.5158	380.8409	746.3518	2342.8837
6									
7	***Directly Assigned***								
8	Product Management Expense	cA*r5	0.02557	16.2565	24.6985	64.3097	9.7363	19.0806	59.8963
9	Sales Expense	cA*r5	0.00922	5.8658	8.9118	23.2046	3.5131	6.8848	21.6121
10	Product Advertising Expense	cA*r5	0.00000	0.0000	0.0000	0.0000	0.0000	0.0000	0.0000
11	Business Fees (Other Operating Taxes)	cA*(r5+r8:r10)	0.00203	1.3326	2.0245	5.2715	0.7981	1.5640	4.9097
12	***Directly Assigned Costs***	*Sum r8:r11*		23.4549	35.6348	92.7858	14.0475	27.5295	86.4182
13									
14	***Total Direct***	*r5 + r12*		659.3400	1001.7311	2608.3015	394.8883	773.8813	2429.3019
15									
16	***Directly Attributed***								
17	Network Operations	cA*r14	0.04088	26.9539	40.9509	106.6276	16.1431	31.6364	99.3101
18	Network Support Assets	cA*r14	0.01536	10.1301	15.3906	40.0739	6.0671	11.8899	37.3237
19	General Support Assets	cA*r14	0.06951	45.8292	69.6279	181.2968	27.4477	53.7906	168.8550
20	General Purpose Computers	cA*r14	0.03471	22.8883	34.7740	90.5444	13.7081	26.8645	84.3306
21	Uncollectible - Interconnect	cA*r14	0.00040	0.2643	0.4015	1.0455	0.1583	0.3102	0.9737
22	Accounting and Finance Expense	cA*r14	0.00884	5.8277	8.8541	23.0542	3.4903	6.8402	21.4720
23	Human Resources Expense	cA*r14	0.00814	5.3701	8.1588	21.2438	3.2162	6.3030	19.7859
24	Information Management Expense	cA*r14	0.05701	37.5886	57.1081	148.6978	22.5124	44.1185	138.4931
25	Intangibles	cA*r14	0.00209	1.3788	2.0948	5.4544	0.8258	1.6183	5.0800
26	***Total Directly Attributed Costs***	*Sum r17:r25*		156.2309	237.3607	618.0383	93.5690	183.3716	575.6243
27									
28	***Total Element Long Run Incremental Costs***	*r 14 + r26*		815.5709	1239.0918	3226.3398	488.4573	957.2529	3004.9262
29									
30	***Common***								
31	Executive Expense	cA*r28	0.00780	6.3654	9.6710	25.1812	3.8124	7.4713	23.4531
32	Planning Expense	cA*r28	0.00058	0.4731	0.7188	1.8717	0.2834	0.5553	1.7432
33	External Relations Expense	cA*r28	0.01303	10.6261	16.1441	42.0359	6.3641	12.4720	39.1512
34	Legal Expense	cA*r28	0.00615	5.0144	7.6183	19.8365	3.0032	5.8855	18.4752
35	Other Procurement Expense	cA*r28	0.00236	1.9242	2.9234	7.6119	1.1524	2.2585	7.0895
36	Research and Development Expense	cA*r28	0.00004	0.0294	0.0446	0.1162	0.0176	0.0345	0.1082
37	Other General and Admin Exp	cA*r28	0.01521	12.4062	18.8486	49.0779	7.4302	14.5614	45.7098
38	***Total Common Costs***	*Sum r31:r37*		36.8387	55.9689	145.7314	22.0633	43.2384	135.7303
39									
40	***TELRIC + Common***	*r27 + r38*		**$852.41**	**$1,295.06**	**$3,372.07**	**$510.52**	**$1,000.49**	**$3,140.66**

c = column, r = row, s = section, p = page, AP = Appendix

	A	B	C	D	E	F	G	H	I	J
1	Qwest Defaults 7/20/01 10:04:18 AM						DS0 UDIT			
2	South Dakota			Investment	Depreciation	Cost of Money	Income Tax	Ad Valorem	Maintenance	Total Capital Costs
3	Acct	FRC	Account Name		cD*(AP p7 cA)/12	cD*(AP p7 cB)/12	cD*(AP p7 cC)/12	cD*(AP p7 cD)/12	cD*(AP p7 cE)/12	sum(cE:cI)
4	**DS0 Unbundled Dedicated Interoffice Transport**									
5	OVER 0 TO 8		FIXED							
6		20C	Land	1.424045	0.000000	0.011452	0.004331	0.001022	0.002653	0.019458
7		110C	Building	54.520563	0.117314	0.340158	0.128635	0.039131	0.101560	0.726799
8		357CS	Other Digital Equipment	24.824129	0.226970	0.094031	0.035559	0.017817	0.067228	0.441605
9		357C	Other Digital Equipment	992.350553	9.073174	3.758903	1.421481	0.712235	2.720552	17.686344
10			Total	**1073.119290**	**9.417458**	**4.204545**	**1.590006**	**0.770204**	**2.891993**	**18.874205**
11	OVER 0 TO 8		VARIABLE							
12		20C	Land	0.009968	0.000000	0.000080	0.000030	0.000007	0.000019	0.000136
13		110C	Building	0.381636	0.000821	0.002381	0.000900	0.000274	0.000711	0.005087
14		85C	UG Cbl Nonmetallic	12.734269	0.075070	0.060018	0.022697	0.009140	0.007532	0.174457
15		357C	Other Digital Equipment	0.137648	0.001259	0.000521	0.000197	0.000099	0.000377	0.002453
16		357CS	Other Digital Equipment	6.982422	0.063841	0.026449	0.010002	0.005011	0.018910	0.124213
17		4C	Conduit System	12.688116	0.022673	0.068305	0.025830	0.009107	0.005877	0.131791
18		845C	Buried Cbl Nonmetallic	1.079080	0.005477	0.005131	0.001940	0.000774	0.001013	0.014335
19			Total	**34.013139**	**0.169140**	**0.162885**	**0.061597**	**0.024412**	**0.034438**	**0.452472**
20	OVER 8 TO 25		FIXED							
21		20C	Land	1.437521	0.000000	0.011561	0.004372	0.001032	0.002678	0.019642
22		110C	Building	55.036514	0.118424	0.343377	0.129853	0.039501	0.102521	0.733677
23		357CS	Other Digital Equipment	34.045681	0.311284	0.128961	0.048768	0.024435	0.092202	0.605650
24		357C	Other Digital Equipment	992.754950	9.076871	3.760435	1.422060	0.712525	2.721660	17.693551
25			Total	**1083.274666**	**9.506579**	**4.244334**	**1.605053**	**0.777493**	**2.919061**	**19.052520**
26	OVER 8 TO 25		VARIABLE							
27		20C	Land	0.006069	0.000000	0.000049	0.000018	0.000004	0.000011	0.000083
28		110C	Building	0.232353	0.000500	0.001450	0.000548	0.000167	0.000433	0.003097
29		85C	UG Cbl Nonmetallic	9.232111	0.054425	0.043512	0.016455	0.006626	0.005460	0.126478
30		357C	Other Digital Equipment	0.070850	0.000648	0.000268	0.000101	0.000051	0.000194	0.001263
31		357CS	Other Digital Equipment	4.264098	0.038987	0.016152	0.006108	0.003060	0.011548	0.075855
32		4C	Conduit System	9.198651	0.016437	0.049520	0.018726	0.006602	0.004261	0.095546
33		845C	Buried Cbl Nonmetallic	2.235355	0.011345	0.010629	0.004020	0.001604	0.002098	0.029696
34			Total	**25.239487**	**0.122342**	**0.121579**	**0.045977**	**0.018115**	**0.024005**	**0.332018**
35	OVER 25 TO 50		FIXED							
36		20C	Land	1.437647	0.000000	0.011562	0.004372	0.001032	0.002678	0.019644
37		110C	Building	55.041349	0.118435	0.343407	0.129864	0.039505	0.102530	0.733741
38		357CS	Other Digital Equipment	34.135896	0.312108	0.129303	0.048898	0.024500	0.092446	0.607255
39		357C	Other Digital Equipment	992.754950	9.076871	3.760435	1.422060	0.712525	2.721660	17.693551
40			Total	**1083.369842**	**9.507414**	**4.244707**	**1.605194**	**0.777561**	**2.919315**	**19.054191**
41	OVER 25 TO 50		VARIABLE							
42		20C	Land	0.002603	0.000000	0.000021	0.000008	0.000002	0.000005	0.000036
43		110C	Building	0.099657	0.000214	0.000622	0.000235	0.000072	0.000186	0.001328
44		85C	UG Cbl Nonmetallic	3.271702	0.019287	0.015420	0.005831	0.002348	0.001935	0.044822
45		357C	Other Digital Equipment	0.038104	0.000348	0.000144	0.000055	0.000027	0.000104	0.000679
46		357CS	Other Digital Equipment	1.821163	0.016651	0.006898	0.002609	0.001307	0.004932	0.032397

Section K - Unbundled Dedicated Interoffice Transport
DS0 UDIT-Investment Cost Calc

	A	B	C	D	E	F	G	H	I	J
1	Qwest Defaults 7/20/01 10:04:18 AM						DS0 UDIT			
2	South Dakota			Investment	Depreciation	Cost of Money	Income Tax	Ad Valorem	Maintenance	Total Capital Costs
3	Acct	FRC	Account Name		cD*(AP p7 cA)/12	cD*(AP p7 cB)/12	cD*(AP p7 cC)/12	cD*(AP p7 cD)/12	cD*(AP p7 cE)/12	sum(cE:cI)
4	**DS0 Unbundled Dedicated Interoffice Transport**									
47		4C	Conduit System	3.259845	0.005825	0.017549	0.006636	0.002340	0.001510	0.033860
48		845C	Buried Cbl Nonmetallic	2.147387	0.010898	0.010211	0.003861	0.001541	0.002016	0.028527
49			Total	10.640460	0.053225	0.050865	0.019235	0.007637	0.010687	0.141649
50	OVER 50		FIXED							
51		20C	Land	1.428346	0.000000	0.011487	0.004344	0.001025	0.002661	0.019517
52		110C	Building	54.685233	0.117668	0.341186	0.129024	0.039249	0.101867	0.728994
53		357CS	Other Digital Equipment	27.796229	0.254144	0.105289	0.039816	0.019950	0.075277	0.494476
54		357C	Other Digital Equipment	992.450655	9.074089	3.759282	1.421624	0.712307	2.720826	17.688128
55			Total	1076.360462	9.445901	4.217244	1.594808	0.772531	2.900631	18.931115
56	OVER 50		VARIABLE							
57		20C	Land	0.001011	0.000000	0.000008	0.000003	0.000001	0.000002	0.000014
58		110C	Building	0.038696	0.000083	0.000241	0.000091		0.000072	0.000488
59		85C	UG Cbl Nonmetallic	0.994508	0.005863	0.004687	0.001773	0.000714	0.000588	0.013625
60		357C	Other Digital Equipment	0.045934	0.000420	0.000174	0.000066	0.000033	0.000126	0.000819
61		357CS	Other Digital Equipment	0.676010	0.006181	0.002561	0.000968	0.000485	0.001831	0.012026
62		4C	Conduit System	0.990903	0.001771	0.005334	0.002017	0.000711	0.000459	0.010292
63		845C	Buried Cbl Nonmetallic	0.640952	0.003253	0.003048	0.001153	0.000460	0.000602	0.008515
64			Total	3.388013	0.017570	0.016053	0.006071	0.002404	0.003679	0.045778
65	**Investment Sources**									
66	Land= (AP p12 D10) * 377C + (AP p12 E10) * (57C+257C+357C+357CS)						Building = (AP p12 B10) * 377C + (AP p12 C10) * (57C+257C+357C+357CS)			
67	All other investments = sK p22 cF									
68										

	A	B	C	D	E	F	G	H	I	J
1	Qwest Defaults 7/20/01 10:04:18 AM						DS1 UDIT			
2	South Dakota			Investment	Depreciation	Cost of Money	Income Tax	Ad Valorem	Maintenance	Total Capital Costs
3	Acct	FRC	Account Name		cD*(AP p7 cA)/12	cD*(AP p7 cB)/12	cD*(AP p7 cC)/12	cD*(AP p7 cD)/12	cD*(AP p7 cE)/12	sum(cE:cI)
4	**DS1 Unbundled Dedicated Interoffice Transport**									
5	OVER 0 TO 8		FIXED							
6		20C	Land	2.107190	0.000000	0.016946	0.006409	0.001512	0.003925	0.028793
7		110C	Building	80.675260	0.173592	0.503339	0.190345	0.057903	0.150281	1.075460
8		357CS	Other Digital Equipment	374.241686	3.421734	1.417582	0.536078	0.268603	1.013513	6.657509
9		357C	Other Digital Equipment	1130.893764	10.339890	4.283688	1.619935	0.811671	3.100371	20.155555
10			Total	1587.917899	13.935216	6.221556	2.352766	1.139688	4.268090	27.917317
11	OVER 0 TO 8		VARIABLE							
12		20C	Land	0.065913	0.000000	0.000530	0.000200	0.000047	0.000123	0.000901
13		110C	Building	2.523544	0.005430	0.015745	0.005954	0.001811	0.004701	0.033641
14		85C	UG Cbl Nonmetallic	74.942924	0.441800	0.353215	0.133573	0.053788	0.044325	1.026701
15		357C	Other Digital Equipment	2.892953	0.026451	0.010958	0.004144	0.002076	0.007931	0.051560
16		357CS	Other Digital Equipment	44.188083	0.404017	0.167379	0.063297	0.031715	0.119669	0.786076
17		4C	Conduit System	74.671309	0.133432	0.401981	0.152015	0.053593	0.034586	0.775607
18		845C	Buried Cbl Nonmetallic	0.371036	0.001883	0.001764	0.000667	0.000266	0.000348	0.004929
19			Total	199.655762	1.013012	0.951573	0.359850	0.143298	0.211683	2.679416
20	OVER 8 TO 25		FIXED							
21		20C	Land	2.155341	0.000000	0.017334	0.006555	0.001547	0.004015	0.029451
22		110C	Building	82.518768	0.177559	0.514841	0.194694	0.059226	0.153715	1.100035
23		357CS	Other Digital Equipment	407.176236	3.722859	1.542334	0.583255	0.292241	1.102705	7.243393
24		357C	Other Digital Equipment	1132.353015	10.353232	4.289215	1.622025	0.812718	3.104372	20.181563
25			Total	1624.203360	14.253649	6.363724	2.406529	1.165731	4.364807	28.554441
26	OVER 8 TO 25		VARIABLE							
27		20C	Land	0.060661	0.000000	0.000488	0.000184	0.000044	0.000113	0.000829
28		110C	Building	2.322446	0.004997	0.014490	0.005480	0.001667	0.004326	0.030960
29		85C	UG Cbl Nonmetallic	75.779031	0.446729	0.357156	0.135063	0.054388	0.044819	1.038156
30		357C	Other Digital Equipment	1.752055	0.016019	0.006637	0.002510	0.001257	0.004803	0.031226
31		357CS	Other Digital Equipment	41.577153	0.380145	0.157489	0.059557		0.112598	0.709789
32		4C	Conduit System	75.504385	0.134920	0.406466	0.153711	0.054191	0.034972	0.784261
33		845C	Buried Cbl Nonmetallic	5.471353	0.027768	0.026016	0.009838	0.003927	0.005135	0.072685
34			Total	202.467084	1.010578	0.968741	0.366343	0.115475	0.206768	2.667905
35	OVER 25 TO 50		FIXED							
36		20C	Land	2.263201	0.000000	0.018201	0.006883	0.001624	0.004216	0.030924
37		110C	Building	86.648269	0.186444	0.540606	0.204437	0.062190	0.161407	1.155084
38		357CS	Other Digital Equipment	480.975443	4.397613	1.821876	0.688967	0.345208	1.302566	8.556232
39		357C	Other Digital Equipment	1135.596744	10.382890	4.301502	1.626672	0.815046	3.113264	20.239374
40			Total	1705.483658	14.966947	6.682185	2.526960	1.224068	4.581454	29.981615
41	OVER 25 TO 50		VARIABLE							
42		20C	Land	0.031039	0.000000	0.000250	0.000094	0.000022	0.000058	0.000424
43		110C	Building	1.188340	0.002557	0.007414	0.002804	0.000853	0.002214	0.015841
44		85C	UG Cbl Nonmetallic	37.892384	0.223381	0.178591	0.067537	0.027196	0.022411	0.519117
45		357C	Other Digital Equipment	0.551400	0.005042	0.002089	0.000790	0.000396	0.001512	0.009827
46		357CS	Other Digital Equipment	21.619121	0.197666	0.081891	0.030968	0.015517	0.058548	0.384590

Section K - Unbundled Dedicated Interoffice Transport

DS1 UDIT-Investment Cost Calc

	A	B	C	D	E	F	G	H	I	J
1	Qwest Defaults 7/20/01 10:04:18 AM						DS1 UDIT			
2	South Dakota			Investment	Depreciation	Cost of Money	Income Tax	Ad Valorem	Maintenance	Total Capital Costs
3	Acct	FRC	Account Name		cD*(AP p7 cA)/12	cD*(AP p7 cB)/12	cD*(AP p7 cC)/12	cD*(AP p7 cD)/12	cD*(AP p7 cE)/12	sum(cE:cI)
47		4C	Conduit System	37.755051	0.067465	0.203248	0.076861	0.027098	0.017487	0.392160
48		845C	Buried Cbl Nonmetallic	13.537070	0.068703	0.064368	0.024342	0.009716	0.012706	0.179835
49			Total	112.574404	0.564814	0.537851	0.203396	0.080797	0.114936	1.501795
50	OVER 50		FIXED							
51		20C	Land	2.184732	0.000000	0.017570	0.006644	0.001568	0.004070	0.029852
52		110C	Building	83.644027	0.179980	0.521862	0.197349	0.060033	0.155811	1.115036
53		357CS	Other Digital Equipment	427.499011	3.908672	1.619314	0.612366	0.306827	1.157743	7.604922
54		357C	Other Digital Equipment	1133.023885	10.359366	4.291757	1.622986	0.813199	3.106211	20.193519
55			Total	1646.351655	14.448018	6.450503	2.439346	1.181628	4.423834	28.943329
56	OVER 50		VARIABLE							
57		20C	Land	0.016158	0.000000	0.000130	0.000049	0.000012	0.000030	0.000221
58		110C	Building	0.618615	0.001331	0.003860	0.001460	0.000444	0.001152	0.008247
59		85C	UG Cbl Nonmetallic	16.902107	0.099640	0.079662	0.030125	0.012131	0.009997	0.231555
60		357C	Other Digital Equipment	1.430846	0.013082	0.005420	0.002050	0.001027	0.003923	0.025501
61		357CS	Other Digital Equipment	10.110479	0.092441	0.038297	0.014483	0.007257	0.027381	0.179859
62		4C	Conduit System	16.840849	0.030093	0.090660	0.034284	0.012087	0.007800	0.174925
63		845C	Buried Cbl Nonmetallic	1.953097	0.009912	0.009287	0.003512	0.001402	0.001833	0.025946
64			Total	47.872151	0.246501	0.227315	0.085962	0.034359	0.052116	0.646254
65	Investment Sources									
66	Land= (AP p12 D10) * 377C + (AP p12 E10) * (57C+257C+357C+357CS)						Building = (AP p12 B10) * 377C + (AP p12 C10) * (57C+257C+357C+357CS)			
67	All other investments = sK p23 cF									
68										

	A	B	C	D	E	F	G	H	I	J
1	Qwest Defaults 7/20/01 10:04:18 AM						DS3 UDIT			
2	South Dakota			Investment	Depreciation	Cost of Money	Income Tax	Ad Valorem	Maintenance	Total Capital Costs
3	Acct	FRC	Account Name		cD*(AP p7 cA)/12	cD*(AP p7 cB)/12	cD*(AP p7 cC)/12	cD*(AP p7 cD)/12	cD*(AP p7 cE)/12	sum(cE:cI)
4	DS3 Unbundled Dedicated Interoffice Transport									
5	OVER 0 TO 8		FIXED							
6		20C	Land	13.8146	0.0000	0.1111	0.0420	0.0099	0.0257	0.1888
7		110C	Building	528.9017	1.1381	3.2999	1.2479	0.3796	0.9852	7.0506
8		357CS	Other Digital Equipment	8097.6407	74.0376	30.6729	11.5994	5.8119	21.9298	144.0516
9		357C	Other Digital Equipment	1769.9291	16.1827	6.7043	2.5353	1.2703	4.8523	31.5449
10			Total	10410.2861	91.3584	40.7881	15.4246	7.4717	27.7931	182.8359
11	OVER 0 TO 8		VARIABLE							
12		20C	Land	1.0799	0.0000	0.0087	0.0033	0.0008	0.0020	0.0148
13		110C	Building	41.3447	0.0890	0.2580	0.0975	0.0297	0.0770	0.5512
14		85C	UG Cbl Nonmetallic	1288.5704	7.5963	6.0732	2.2967	0.9248	0.7621	17.6531
15		357C	Other Digital Equipment	66.6379	0.6093	0.2524	0.0955	0.0478	0.1827	1.1877
16		357CS	Other Digital Equipment	704.7187	6.4433	2.6694	1.0095	0.5058	1.9085	12.5365
17		4C	Conduit System	1283.9003	2.2942	6.9117	2.6137	0.9215	0.5947	13.3358
18		845C	Buried Cbl Nonmetallic	0.0000	0.0000	0.0000	0.0000	0.0000	0.0000	0.0000
19			Total	3386.2519	17.0321	16.1733	6.1162	2.4304	3.5270	45.2790
20	OVER 8 TO 25		FIXED							
21		20C	Land	14.0127	0.0000	0.1127	0.0426	0.0101	0.0261	0.1915
22		110C	Building	536.4870	1.1544	3.3472	1.2658	0.3851	0.9994	7.1518
23		357CS	Other Digital Equipment	8233.1079	75.2762	31.1860	11.7934	5.9091	22.2967	146.4615
24		357C	Other Digital Equipment	1775.9774	16.2380	6.7272	2.5440	1.2747	4.8689	31.6527
25			Total	10559.5850	92.6686	41.3731	15.6458	7.5789	28.1911	185.4574
26	OVER 8 TO 25		VARIABLE							
27		20C	Land	0.2611	0.0000	0.0021	0.0008	0.0002	0.0005	0.0036
28		110C	Building	9.9958	0.0215	0.0624	0.0236	0.0072	0.0186	0.1333
29		85C	UG Cbl Nonmetallic	468.3466	2.7610	2.2074	0.8347	0.3361	0.2770	6.4162
30		357C	Other Digital Equipment	77.6258	0.7097	0.2940	0.1112	0.0557	0.2128	1.3835
31		357CS	Other Digital Equipment	108.8623	0.9953	0.4124	0.1559	0.0781	0.2948	1.9366
32		4C	Conduit System	466.6492	0.8339	2.5121	0.9500	0.3349	0.2161	4.8471
33		845C	Buried Cbl Nonmetallic	14.4129	0.0731	0.0685	0.0259	0.0103	0.0135	0.1915
34			Total	1146.1536	5.3946	5.5589	2.1022		1.0334	14.0891
35	OVER 25 TO 50		FIXED							
36		20C	Land	12.9619	0.0000	0.1042	0.0394	0.0093	0.0241	0.1771
37		110C	Building	496.2565	1.0678	3.0962	1.1709	0.3562	0.9244	6.6155
38		357CS	Other Digital Equipment	7512.2780	68.6856	28.4556	10.7609	5.3917	20.3446	133.6384
39		357C	Other Digital Equipment	1746.2380	15.9661	6.6145	2.5014	1.2533	4.7874	31.1226
40			Total	9767.7343	85.7195	38.2706	14.4725	7.0105	26.0805	171.5536
41	OVER 25 TO 50		VARIABLE							
42		20C	Land	0.4731	0.0000	0.0038	0.0014	0.0003	0.0009	0.0065
43		110C	Building	18.1124	0.0390	0.1130	0.0427	0.0130	0.0337	0.2415
44		85C	UG Cbl Nonmetallic	478.8215	2.8227	2.2567	0.8534	0.3437	0.2832	6.5597
45		357C	Other Digital Equipment	48.9415	0.4475	0.1854	0.0701	0.0351	0.1342	0.8723
46		357CS	Other Digital Equipment	288.9773	2.6422	1.0946	0.4139	0.2074	0.7826	5.1407
47		4C	Conduit System	477.0862	0.8525	2.5683	0.9712	0.3424	0.2210	4.9555

Section K - Unbundled Dedicated Interoffice Transport

DS3 UDIT-Investment Cost Calc

	A	B	C	D	E	F	G	H	I	J
1	Qwest Defaults 7/20/01 10:04:18 AM						DS3 UDIT			
2	South Dakota			Investment	Depreciation	Cost of Money	Income Tax	Ad Valorem	Maintenance	Total Capital Costs
3	Acct	FRC	Account Name		cD*(AP p7 cA)/12	cD*(AP p7 cB)/12	cD*(AP p7 cC)/12	cD*(AP p7 cD)/12	cD*(AP p7 cE)/12	sum(cE:cI)
48		845C	Buried Cbl Nonmetallic	0.0000	0.0000	0.0000	0.0000	0.0000	0.0000	0.0000
49			Total	1312.4119	6.8038	6.2219	2.3529	0.9420	1.4556	17.7761
50	OVER 50		FIXED							
51		20C	Land	13.6425	0.0000	0.1097	0.0415	0.0098	0.0254	0.1864
52		110C	Building	522.3122	1.1239	3.2587	1.2323	0.3749	0.9730	6.9628
53		357CS	Other Digital Equipment	7978.2439	72.9460	30.2206	11.4283	5.7262	21.6065	141.9276
54		357C	Other Digital Equipment	1766.3859	16.1503	6.6909	2.5302	1.2678	4.8426	31.4817
55			Total	10280.5844	90.2201	40.2799	15.2324	7.3786	27.4475	180.5586
56	OVER 50		VARIABLE							
57		20C	Land	0.3415	0.0000	0.0027	0.0010	0.0002	0.0006	0.0047
58		110C	Building	13.0739	0.0281	0.0816	0.0308	0.0094	0.0244	0.1743
59		85C	UG Cbl Nonmetallic	293.5269	1.7304	1.3834	0.5232	0.2107	0.1736	4.0213
60		357C	Other Digital Equipment	46.3729	0.4240	0.1757	0.0664	0.0333	0.1271	0.8265
61		357CS	Other Digital Equipment	197.5427	1.8062	0.7483	0.2830	0.1418	0.5350	3.5142
62		4C	Conduit System	292.4631	0.5226	1.5744	0.5954	0.2099	0.1355	3.0378
63		845C	Buried Cbl Nonmetallic	49.9701	0.2536	0.2376	0.0899	0.0359	0.0469	0.6638
64			Total	893.2911	4.7649	4.2037	1.5897	0.6411	1.0431	12.2425
65	Investment Sources									
66	Land= (AP p12 D10) * 377C + (AP p12 E10) * (57C+257C+357C+357CS)						Building = (AP p12 B10) * 377C + (AP p12 C10) * (57C+257C+357C+357CS)			
67	All other investments = sK p24 cF									
68										

	A	B	C	D	E	F	G	H	I	J
1	Qwest Defaults 7/20/01 10:04:18 AM						OC3 UDIT			
2	South Dakota			Investment	Depreciation	Cost of Money	Income Tax	Ad Valorem	Maintenance	Total Capital Costs
3	Acct	FRC	Account Name		cD*(AP p7 cA)/12	cD*(AP p7 cB)/12	cD*(AP p7 cC)/12	cD*(AP p7 cD)/12	cD*(AP p7 cE)/12	sum(cE:cI)
4	OC3 Unbundled Dedicated Interoffice Transport									
5	OVER 0 TO 8		FIXED							
6		20C	Land	44.5499	0.0000	0.3583	0.1355	0.0320	0.0830	0.6087
7		110C	Building	1705.6248	3.6701	10.6415	4.0242	1.2242	3.1772	22.7372
8		357CS	Other Digital Equipment	31045.9997	283.8571	117.5985	44.4715	22.2825	84.0781	552.2876
9		357C	Other Digital Equipment	775.3591	7.0892	2.9370	1.1107	0.5565	2.1257	13.8190
10			Total	33571.5335	294.6164	131.5352	49.7419	24.0951	89.4639	589.4525
11	OVER 0 TO 8		VARIABLE							
12		20C	Land	5.5029	0.0000	0.0443	0.0167	0.0039	0.0103	0.0752
13		110C	Building	210.6807	0.4533	1.3145	0.4971	0.1512	0.3925	2.8085
14		85C	UG Cbl Nonmetallic	3524.7653	20.7790	16.6126	6.2823	2.5298	2.0847	48.2885
15		357C	Other Digital Equipment	167.6491	1.5328	0.6350	0.2401	0.1203	0.4596	2.9880
16		357CS	Other Digital Equipment	3762.9609	34.4052	14.2536	5.3902	2.7008	10.1908	66.9406
17		4C	Conduit System	3511.9905	6.2756	18.9063	7.1497	2.5206	1.6267	36.4789
18		845C	Buried Cbl Nonmetallic	0.0000	0.0000	0.0000	0.0000	0.0000	0.0000	0.0000
19			Total	11183.5494	63.4460	51.7663	19.5761	8.0267	14.7645	157.5796
20	OVER 8 TO 25		FIXED							
21		20C	Land	44.8673	0.0000	0.3608	0.1365	0.0322	0.0836	0.6131
22		110C	Building	1717.7761	3.6962	10.7173	4.0529	1.2329	3.1999	22.8992
23		357CS	Other Digital Equipment	31253.5318	285.7546	118.3846	44.7687	22.4314	84.6401	555.9794
24		357C	Other Digital Equipment	794.5302	7.2645	3.0096	1.1381	0.5703	2.1782	14.1607
25			Total	33810.7055	296.7153	132.4723	50.0962	24.2668	90.1017	593.6524
26	OVER 8 TO 25		VARIABLE							
27		20C	Land	1.1428	0.0000	0.0092	0.0035	0.0008	0.0021	0.0156
28		110C	Building	43.7537	0.0941	0.2730	0.1032	0.0314	0.0815	0.5833
29		85C	UG Cbl Nonmetallic	1555.7903	9.1716	7.3326	2.7729	1.1166	0.9202	21.3140
30		357C	Other Digital Equipment	276.6824	2.5297	1.0480	0.3963	0.1986	0.7585	4.9312
31		357CS	Other Digital Equipment	539.6175	4.9338	2.0440	0.7730	0.3873	1.4614	9.5994
32		4C	Conduit System	1550.1517	2.7700	8.3450	3.1558	1.1126	0.7180	16.1014
33		845C	Buried Cbl Nonmetallic	43.2387	0.2194	0.2056	0.0777	0.0310	0.0406	0.5744
34			Total	4010.3772	19.7187	19.2574	7.2825		3.9823	50.2409
35	OVER 25 TO 50		FIXED							
36		20C	Land	43.1228	0.0000	0.3468	0.1311	0.0310	0.0803	0.5892
37		110C	Building	1650.9865	3.5525	10.3006	3.8953	1.1850	3.0754	22.0088
38		357CS	Other Digital Equipment	30101.7207	275.2234	114.0217	43.1188	21.6048	81.5208	535.4895
39		357C	Other Digital Equipment	700.2666	6.4026	2.6525	1.0031	0.5026	1.9198	12.4806
40			Total	32496.0966	285.1786	127.3216	48.1484	23.3233	86.5963	570.5682
41	OVER 25 TO 50		VARIABLE							
42		20C	Land	2.1111	0.0000	0.0170	0.0064	0.0015	0.0039	0.0288
43		110C	Building	80.8260	0.1739	0.5043	0.1907	0.0580	0.1506	1.0775
44		85C	UG Cbl Nonmetallic	1564.2251	9.2213	7.3724	2.7880	1.1227	0.9252	21.4295
45		357C	Other Digital Equipment	176.6659	1.6153	0.6692	0.2531	0.1268	0.4843	3.1487
46		357CS	Other Digital Equipment	1331.2820	12.1721	5.0427	1.9070	0.9555	3.6053	23.6826
47		4C	Conduit System	1558.5559	2.7850	8.3902	3.1729	1.1186	0.7219	16.1886

Section K - Unbundled Dedicated Interoffice Transport

OC3 UDIT-Investment Cost Calc

	A	B	C	D	E	F	G	H	I	J
1	Qwest Defaults 7/20/01 10:04:18 AM						OC3 UDIT			
2	South Dakota			Investment	Depreciation	Cost of Money	Income Tax	Ad Valorem	Maintenance	Total Capital Costs
3	Acct	FRC	Account Name		cD*(AP p7 cA)/12	cD*(AP p7 cB)/12	cD*(AP p7 cC)/12	cD*(AP p7 cD)/12	cD*(AP p7 cE)/12	sum(cE:cI)
48		845C	Buried Cbl Nonmetallic	0.0000	0.0000	0.0000	0.0000	0.0000	0.0000	0.0000
49			Total	4713.6660	25.9676	21.9958	8.3180	3.3831	5.8912	65.5558
50	OVER 50		FIXED							
51		20C	Land	44.2294	0.0000	0.3557	0.1345	0.0317	0.0824	0.6044
52		110C	Building	1693.3559	3.6437	10.5650	3.9953	1.2154	3.1544	22.5737
53		357CS	Other Digital Equipment	30828.3315	281.8669	116.7740	44.1597	22.1263	83.4886	548.4154
54		357C	Other Digital Equipment	764.1286	6.9865	2.8944	1.0946	0.5484	2.0949	13.6188
55			Total	33330.0454	292.4971	130.5891	49.3840	23.9218	88.8202	585.2122
56	OVER 50		VARIABLE							
57		20C	Land	1.2899	0.0000	0.0104	0.0039	0.0009	0.0024	0.0176
58		110C	Building	49.3851	0.1063	0.3081	0.1165	0.0354	0.0920	0.6583
59		85C	UG Cbl Nonmetallic	1108.0045	6.5319	5.2222	1.9748	0.7952	0.6553	15.1794
60		357C	Other Digital Equipment	183.7522	1.6801	0.6960	0.2632	0.1319	0.5038	3.2750
61		357CS	Other Digital Equipment	737.6108	6.7441	2.7940	1.0566	0.5294	1.9976	13.1216
62		4C	Conduit System	1103.9888	1.9727	5.9432	2.2475	0.7924	0.5113	11.4671
63		845C	Buried Cbl Nonmetallic	149.9104	0.7608	0.7128	0.2696	0.1076	0.1407	1.9915
64			Total	3333.9416	17.7958	15.6866	5.9321	2.3929	3.9031	45.7105
65	**Investment Sources**									
66	Land= (AP p12 D10) * 377C + (AP p12 E10) * (57C+257C+357C+357CS)						Building = (AP p12 B10) * 377C + (AP p12 C10) * (57C+257C+357C+357CS)			
67	All other investments = sK p25 cF									
68										

	A	B	C	D	E	F	G	H	I	J
1	Qwest Defaults 7/20/01 10:04:18 AM						OC12 UDIT			
2	South Dakota			Investment	Depreciation	Cost of Money	Income Tax	Ad Valorem	Maintenance	Total Capital Costs
3	Acct	FRC	Account Name		cD*(AP p7 cA)/12	cD*(AP p7 cB)/12	cD*(AP p7 cC)/12	cD*(AP p7 cD)/12	cD*(AP p7 cE)/12	sum(cE:cI)
4	OC12 Unbundled Dedicated Interoffice Transport									
5	OVER 0 TO 8		FIXED							
6		20C	Land	124.2726	0.0000	0.9994	0.3779	0.0892	0.2315	1.6981
7		110C	Building	4757.8650	10.2377	29.6847	11.2257	3.4148	8.8629	63.4258
8		357CS	Other Digital Equipment	87081.3511	796.1947	329.8536	124.7386	62.5005	235.8317	1549.1190
9		357C	Other Digital Equipment	1684.7870	15.4042	6.3818	2.4134	1.2092	4.6189	30.0274
10			Total	93648.2757	821.8366	366.9195	138.7556	67.2137	249.5450	1644.2703
11	OVER 0 TO 8		VARIABLE							
12		20C	Land	0.4875	0.0000	0.0039	0.0015	0.0003	0.0009	0.0067
13		110C	Building	18.6637	0.0402	0.1164	0.0440	0.0134	0.0348	0.2488
14		85C	UG Cbl Nonmetallic	2593.1776	15.2872	12.2220	4.6219	1.8612	1.5337	35.5260
15		357C	Other Digital Equipment	348.2026	3.1837	1.3189	0.4988	0.2499	0.9546	6.2059
16		357CS	Other Digital Equipment	0.0000	0.0000	0.0000	0.0000	0.0000	0.0000	0.0000
17		4C	Conduit System	2583.7791	4.6170	13.9094	5.2600	1.8544	1.1968	26.8376
18		845C	Buried Cbl Nonmetallic	0.0000	0.0000	0.0000	0.0000	0.0000	0.0000	0.0000
19			Total	5544.3104	23.1280	27.5706	10.4262	3.9793	3.7208	68.8249
20	OVER 8 TO 25		FIXED							
21		20C	Land	124.2726	0.0000	0.9994	0.3779	0.0892	0.2315	1.6981
22		110C	Building	4757.8650	10.2377	29.6847	11.2257	3.4148	8.8629	63.4258
23		357CS	Other Digital Equipment	87081.3511	796.1947	329.8536	124.7386	62.5005	235.8317	1549.1190
24		357C	Other Digital Equipment	1684.7870	15.4042	6.3818	2.4134	1.2092	4.6189	30.0274
25			Total	93648.2757	821.8366	366.9195	138.7556	67.2137	249.5450	1644.2703
26	OVER 8 TO 25		VARIABLE							
27		20C	Land	0.8421	0.0000	0.0068	0.0026	0.0006	0.0016	0.0115
28		110C	Building	32.2403	0.0694	0.2011	0.0761	0.0231	0.0601	0.4298
29		85C	UG Cbl Nonmetallic	2590.5510	15.2717	12.2096	4.6172	1.8593	1.5322	35.4900
30		357C	Other Digital Equipment	585.9628	5.3575	2.2196	0.8394	0.4206	1.6064	10.4434
31		357CS	Other Digital Equipment	15.5352	0.1420	0.0588	0.0223	0.0112	0.0421	0.2764
32		4C	Conduit System	2581.1621	4.6123	13.8953	5.2547	1.8526	1.1955	26.8104
33		845C	Buried Cbl Nonmetallic	51.8864	0.2633	0.2467	0.0933	0.0372	0.0487	0.6893
34			Total	5858.1799	25.7163	28.8379	10.9054		4.4865	69.9462
35	OVER 25 TO 50		FIXED							
36		20C	Land	124.2726	0.0000	0.9994	0.3779	0.0892	0.2315	1.6981
37		110C	Building	4757.8650	10.2377	29.6847	11.2257	3.4148	8.8629	63.4258
38		357CS	Other Digital Equipment	87081.3511	796.1947	329.8536	124.7386	62.5005	235.8317	1549.1190
39		357C	Other Digital Equipment	1684.7870	15.4042	6.3818	2.4134	1.2092	4.6189	30.0274
40			Total	93648.2757	821.8366	366.9195	138.7556	67.2137	249.5450	1644.2703
41	OVER 25 TO 50		VARIABLE							
42		20C	Land	1.3704	0.0000	0.0110	0.0042	0.0010	0.0026	0.0187
43		110C	Building	52.4661	0.1129	0.3273	0.1238	0.0377	0.0977	0.6994
44		85C	UG Cbl Nonmetallic	2490.3201	14.6808	11.7372	4.4386	1.7874	1.4729	34.1168
45		357C	Other Digital Equipment	446.3109	4.0807	1.6906	0.6393	0.3203	1.2236	7.9545
46		357CS	Other Digital Equipment	532.5348	4.8690	2.0172	0.7628	0.3822	1.4422	9.4734
47		4C	Conduit System	2481.2945	4.4339	13.3577	5.0514	1.7809	1.1493	25.7731

Section K - Unbundled Dedicated Interoffice Transport

OC12 UDIT-Investment Cost Calc

	A	B	C	D	E	F	G	H	I	J
1	Qwest Defaults 7/20/01 10:04:18 AM						OC12 UDIT			
2	South Dakota			Investment	Depreciation	Cost of Money	Income Tax	Ad Valorem	Maintenance	Total Capital Costs
3	Acct	FRC	Account Name		cD*(AP p7 cA)/12	cD*(AP p7 cB)/12	cD*(AP p7 cC)/12	cD*(AP p7 cD)/12	cD*(AP p7 cE)/12	sum(cE:cI)
48		845C	Buried Cbl Nonmetallic	0.0000	0.0000	0.0000	0.0000	0.0000	0.0000	0.0000
49			Total	6004.2968	28.1773	29.1410	11.0200	4.3094	5.3882	78.0360
50	OVER 50		FIXED							
51		20C	Land	124.2726	0.0000	0.9994	0.3779	0.0892	0.2315	1.6981
52		110C	Building	4757.8650	10.2377	29.6847	11.2257	3.4148	8.8629	63.4258
53		357CS	Other Digital Equipment	87081.3511	796.1947	329.8536	124.7386	62.5005	235.8317	1549.1190
54		357C	Other Digital Equipment	1684.7870	15.4042	6.3818	2.4134	1.2092	4.6189	30.0274
55			Total	93648.2757	821.8366	366.9195	138.7556	67.2137	249.5450	1644.2703
56	OVER 50		VARIABLE							
57		20C	Land	2.3569	0.0000	0.0190	0.0072	0.0017	0.0044	0.0322
58		110C	Building	90.2357	0.1942	0.5630	0.2129	0.0648	0.1681	1.2029
59		85C	UG Cbl Nonmetallic	2421.2394	14.2736	11.4116	4.3155	1.7378	1.4320	33.1704
60		357C	Other Digital Equipment	466.1259	4.2618	1.7656	0.6677	0.3346	1.2779	8.3076
61		357CS	Other Digital Equipment	1217.3754	11.1306	4.6113	1.7438	0.8737	3.2969	21.6563
62		4C	Conduit System	2412.4642	4.3109	12.9871	4.9113	1.7315	1.1174	25.0582
63		845C	Buried Cbl Nonmetallic	179.8924	0.9130	0.8554	0.3235	0.1291	0.1688	2.3898
64			Total	6789.6899	35.0840	32.2129	12.1818	4.8731	7.4655	91.8174
65	**Investment Sources**									
66	Land= (AP p12 D10) * 377C + (AP p12 E10) * (57C+257C+357C+357CS)						Building = (AP p12 B10) * 377C + (AP p12 C10) * (57C+257C+357C+357CS)			
67	All other investments = sK p26 cF									
68										

	A	B	C	D	E	F	G	H	I	J
1	Qwest Defaults 7/20/01 10:04:18 AM						OC48 UDIT			
2	South Dakota			Investment	Depreciation	Cost of Money	Income Tax	Ad Valorem	Maintenance	Total Capital Costs
3	Acct	FRC	Account Name		cD*(AP p7 cA)/12	cD*(AP p7 cB)/12	cD*(AP p7 cC)/12	cD*(AP p7 cD)/12	cD*(AP p7 cE)/12	sum(cE:cI)
4	OC48 Unbundled Dedicated Interoffice Transport									
5	OVER 0 TO 8		FIXED							
6		20C	Land	409.8984	0.0000	3.2965	1.2466	0.2942	0.7636	5.6008
7		110C	Building	15693.2535	33.7678	97.9115	37.0266	11.2634	29.2332	209.2025
8		357CS	Other Digital Equipment	287168.6231	2625.6153	1087.7598	411.3512	206.1081	777.7034	5108.5378
9		357C	Other Digital Equipment	5615.9568	51.3473	21.2726	8.0445	4.0307	15.3963	100.0914
10			Total	308887.7318	2710.7304	1210.2403	457.6689	221.6964	823.0964	5423.4325
11	OVER 0 TO 8		VARIABLE							
12		20C	Land	1.6249	0.0000	0.0131	0.0049	0.0012	0.0030	0.0222
13		110C	Building	62.2122	0.1339	0.3881	0.1468	0.0447	0.1159	0.8293
14		85C	UG Cbl Nonmetallic	8643.9252	50.9573	40.7399	15.4063	6.2040	5.1124	118.4199
15		357C	Other Digital Equipment	1160.6755	10.6122	4.3965	1.6626	0.8330	3.1820	20.6863
16		357CS	Other Digital Equipment	0.0000	0.0000	0.0000	0.0000	0.0000	0.0000	0.0000
17		4C	Conduit System	8612.5970	15.3900	46.3646	17.5334	6.1815	3.9892	89.4586
18		845C	Buried Cbl Nonmetallic	0.0000	0.0000	0.0000	0.0000	0.0000	0.0000	0.0000
19			Total	18481.0348	77.0933	91.9022	34.7541	13.2643	12.4026	229.4164
20	OVER 8 TO 25		FIXED							
21		20C	Land	409.8984	0.0000	3.2965	1.2466	0.2942	0.7636	5.6008
22		110C	Building	15693.2535	33.7678	97.9115	37.0266	11.2634	29.2332	209.2025
23		357CS	Other Digital Equipment	287168.6231	2625.6153	1087.7598	411.3512	206.1081	777.7034	5108.5378
24		357C	Other Digital Equipment	5615.9568	51.3473	21.2726	8.0445	4.0307	15.3963	100.0914
25			Total	308887.7318	2710.7304	1210.2403	457.6689	221.6964	823.0964	5423.4325
26	OVER 8 TO 25		VARIABLE							
27		20C	Land	2.8518	0.0000	0.0229	0.0087	0.0020	0.0053	0.0390
28		110C	Building	109.1833	0.2349	0.6812	0.2576	0.0784	0.2034	1.4555
29		85C	UG Cbl Nonmetallic	8635.1700	50.9056	40.6986	15.3907	6.1977	5.1073	118.2999
30		357C	Other Digital Equipment	1953.2093	17.8584	7.3985	2.7979	1.4019	5.3548	34.8114
31		357CS	Other Digital Equipment	83.7922	0.7661	0.3174	0.1200	0.0601	0.2269	1.4906
32		4C	Conduit System	8603.8735	15.3744	46.3176	17.5156	6.1752	3.9851	89.3680
33		845C	Buried Cbl Nonmetallic	172.9547	0.8778	0.8224	0.3110	0.1241	0.1623	2.2976
34			Total	19561.0348	86.0173	96.2587	36.4015		15.0451	233.7226
35	OVER 25 TO 50		FIXED							
36		20C	Land	409.8984	0.0000	3.2965	1.2466	0.2942	0.7636	5.6008
37		110C	Building	15693.2535	33.7678	97.9115	37.0266	11.2634	29.2332	209.2025
38		357CS	Other Digital Equipment	287168.6231	2625.6153	1087.7598	411.3512	206.1081	777.7034	5108.5378
39		357C	Other Digital Equipment	5615.9568	51.3473	21.2726	8.0445	4.0307	15.3963	100.0914
40			Total	308887.7318	2710.7304	1210.2403	457.6689	221.6964	823.0964	5423.4325
41	OVER 25 TO 50		VARIABLE							
42		20C	Land	6.1040	0.0000	0.0491	0.0186	0.0044	0.0114	0.0834
43		110C	Building	233.6975	0.5029	1.4581	0.5514	0.1677	0.4353	3.1154
44		85C	UG Cbl Nonmetallic	8301.0671	48.9361	39.1239	14.7952	5.9579	4.9097	113.7228
45		357C	Other Digital Equipment	1487.7029	13.6022	5.6352	2.1310	1.0678	4.0786	26.5148
46		357CS	Other Digital Equipment	2872.3250	26.2620	10.8800	4.1144	2.0615	7.7788	51.0967
47		4C	Conduit System	8270.9816	14.7796	44.5255	16.8379	5.9363	3.8310	85.9103

Section K - Unbundled Dedicated Interoffice Transport
OC48 UDIT-Investment Cost Calc

	A	B	C	D	E	F	G	H	I	J
1	Qwest Defaults 7/20/01 10:04:18 AM						OC48 UDIT			
2	South Dakota			Investment	Depreciation	Cost of Money	Income Tax	Ad Valorem	Maintenance	Total Capital Costs
3	Acct	FRC	Account Name		cD*(AP p7 cA)/12	cD*(AP p7 cB)/12	cD*(AP p7 cC)/12	cD*(AP p7 cD)/12	cD*(AP p7 cE)/12	sum(cE:cI)
48		845C	Buried Cbl Nonmetallic	0.0000	0.0000	0.0000	0.0000	0.0000	0.0000	0.0000
49			Total	21171.8782	104.0827	101.6719	38.4486	15.1956	21.0446	280.4434
50	OVER 50		FIXED							
51		20C	Land	409.8984	0.0000	3.2965	1.2466	0.2942	0.7636	5.6008
52		110C	Building	15693.2535	33.7678	97.9115	37.0266	11.2634	29.2332	209.2025
53		357CS	Other Digital Equipment	287168.6231	2625.6153	1087.7598	411.3512	206.1081	777.7034	5108.5378
54		357C	Other Digital Equipment	5615.9568	51.3473	21.2726	8.0445	4.0307	15.3963	100.0914
55			Total	308887.7318	2710.7304	1210.2403	457.6689	221.6964	823.0964	5423.4325
56	OVER 50		VARIABLE							
57		20C	Land	11.3679	0.0000	0.0914	0.0346	0.0082	0.0212	0.1553
58		110C	Building	435.2263	0.9365	2.7154	1.0269	0.3124	0.8107	5.8019
59		85C	UG Cbl Nonmetallic	8070.7981	47.5786	38.0386	14.3848	5.7926	4.7735	110.5681
60		357C	Other Digital Equipment	1553.7530	14.2061	5.8854	2.2257	1.1152	4.2596	27.6920
61		357CS	Other Digital Equipment	6566.1401	60.0350	24.8717	9.4056	4.7127	17.7823	116.8072
62		4C	Conduit System	8041.5472	14.3696	43.2904	16.3709	5.7716	3.7247	83.5272
63		845C	Buried Cbl Nonmetallic	599.6415	3.0433	2.8513	1.0782	0.4304	0.5628	7.9660
64			Total	25278.4741	140.1691	117.7443	44.5266	18.1430	31.9348	352.5178
65	**Investment Sources**									
66	Land= (AP p12 D10) * 377C + (AP p12 E10) * (57C+257C+357C+357CS)						Building = (AP p12 B10) * 377C + (AP p12 C10) * (57C+257C+357C+357CS)			
67	All other investments = sK p27 cF									
68										

Section K - Unbundled Dedicated InterofficeTransport
EUDIT-Investment Cost Calc

	A	B	C	D	E	F	G	H	I	J
1	Qwest Defaults 7/20/01 10:04:18 AM						OCN E-UDIT			
2	South Dakota			Investment	Depreciation	Cost of Money	Income Tax	Ad Valorem	Maintenance	Total Capital Costs
3	Acct	FRC	Account Name		cD*(AP p7 cA)/12	cD*(AP p7 cB)/12	cD*(AP p7 cC)/12	cD*(AP p7 cD)/12	cD*(AP p7 cE)/12	sum(cE:cI)
4	**OC3 E-UDIT Central Office Node**									
5	2111	20C	Land	22.892951	0.000000	0.184110	0.069624	0.016431	0.042645	0.312809
6	2121	110C	Building	876.472970	1.885940	5.468385	2.067945	0.629066	1.632684	11.684020
7	2232.2	257CS	Pair Gain—Digital	15972.283560	146.036402	60.501067	22.879305	11.463705	15.200368	256.080847
8	2232.3	357C	Other Digital Equipment	379.824090	3.472775	1.438727	0.544074	0.272609	1.041296	6.769482
9	2422.12,.22	85C	UG Cbl Nonmetallic	3262.850697	19.235001	15.378209	5.815480	2.341829	1.929810	44.700329
10	2423.12,.22	845C	Buried Cbl Nonmetallic	20082.016851	101.920236	95.489082	36.110502	14.413363	18.848640	266.781823
11	2426.2	862C	Intrabuilding Cbl., Exch., Nonmetallic	87.987875	0.459679	0.427999	0.161854	0.063151	0.050742	1.163426
12	2441	4C	Conduit System	4396.597082	7.856360	23.668400	8.950529	3.155547	2.036415	45.667251
13			**Total**	**45080.926074**	**280.866393**	**202.555980**	**76.599313**	**32.355702**	**40.782599**	**633.159988**
14	**OC12 E-UDIT Central Office Node**									
15	2111	20C	Land	50.347393	0.000000	0.404904	0.153120	0.036136	0.093787	0.687946
16	2121	110C	Building	1927.585890	4.147660	12.026364	4.547934	1.383476	3.590685	25.696118
17	2232.2	257CS	Pair Gain—Digital	35582.599223	325.335744	134.782556	50.969866	25.538517	33.862947	570.489630
18	2232.3	357C	Other Digital Equipment	379.824090	3.472775	1.438727	0.544074	0.272609	1.041296	6.769482
19	2422.12,.22	85C	UG Cbl Nonmetallic	3262.850697	19.235001	15.378209	5.815480	2.341829	1.929810	44.700329
20	2423.12,.22	845C	Buried Cbl Nonmetallic	20082.016851	101.920236	95.489082	36.110502	14.413363	18.848640	266.781823
21	2426.2	862C	Intrabuilding Cbl., Exch., Nonmetallic	87.987875	0.459679	0.427999	0.161854	0.063151	0.050742	1.163426
22	2441	4C	Conduit System	4396.597082	7.856360	23.668400	8.950529	3.155547	2.036415	45.667251
23			**Total**	**65769.809099**	**462.427455**	**283.616242**	**107.253359**	**47.204629**	**61.454321**	**961.956006**
24	**OC48 E-UDIT Central Office Node**									
25	2111	20C	Land	179.169350	0.000000	1.440917	0.544902	0.128594	0.333755	2.448168
26	2121	110C	Building	6859.626545	14.760119	42.797762	16.184559	4.923325	12.778033	91.443797
27	2232.2	257CS	Pair Gain—Digital	127598.283099	1166.645588	483.326770	182.776626	91.580463	121.431654	2045.761101
28	2232.3	357C	Other Digital Equipment	379.824090	3.472775	1.438727	0.544074	0.272609	1.041296	6.769482
29	2422.12,.22	85C	UG Cbl Nonmetallic	3262.850697	19.235001	15.378209	5.815480	2.341829	1.929810	44.700329
30	2423.12,.22	845C	Buried Cbl Nonmetallic	20082.016851	101.920236	95.489082	36.110502	14.413363	18.848640	266.781823
31	2426.2	862C	Intrabuilding Cbl., Exch., Nonmetallic	87.987875	0.459679	0.427999	0.161854	0.063151	0.050742	1.163426
32	2441	4C	Conduit System	4396.597082	7.856360	23.668400	8.950529	3.155547	2.036415	45.667251
33			**Total**	**162846.355587**	**1314.349758**	**663.967868**	**251.088526**	**116.878882**	**158.450344**	**2504.735378**
34	**OC3 E-UDIT Remote Node**									
35	2232.2	257CSP	Pair Gain—Digital	23652.022515	216.253127	89.590983	33.880055	16.975645	22.508957	379.208767
36			**Total**	**23652.022515**	**216.253127**	**89.590983**	**33.880055**	**16.975645**	**22.508957**	**379.208767**
37	**OC12 E-UDIT Remote Node**									
38	2232.2	257CSP	Pair Gain—Digital	46351.984293	423.801454	175.575676	66.396342	33.267973	44.111864	743.153310
39			**Total**	**46351.984293**	**423.801454**	**175.575676**	**66.396342**	**33.267973**	**44.111864**	**743.153310**
40	**OC48 E-UDIT Remote Node**									
41	2232.2	257CSP	Pair Gain—Digital	145504.177288	1330.361211	551.152119	208.425708	104.431969	138.472184	2332.843191
42			**Total**	**145504.177288**	**1330.361211**	**551.152119**	**208.425708**	**104.431969**	**138.472184**	**2332.843191**
43	**Investment Sources**									
44	Land= (AP p12 D10) * 377C + (AP p12 E10) * (57C+257C+357C+357CS)						Building = (AP p12 B10) * 377C + (AP p12 C10) * (57C+257C+357C+357CS)			
45	All other investments = sK p21 cE									

Section K - Unbundled Dedicated InterofficeTransport
EUDIT Defaults and Overrides

	A	B	C	D	E
1	Qwest Defaults 7/20/01 10:04:18 AM				
2			**E-UDIT**		
3	South Dakota				
4	**Description**	**FRC**	**Default Value**	**Overrides**	**This Run**
5					
6	**OC3 E-UDIT**				
7	CIRCUIT-DIGITAL SONET	257CS	$15,972.28		$15,972.28
8	CIRCUIT-DIGITAL SONET-PREMISES	257CSP	$23,652.02		$23,652.02
9	CONDUIT SYSTEMS	4C	$4,396.60		$4,396.60
10	UNDERGROUND CABLE NONMETALLIC	85C	$3,262.85		$3,262.85
11	BURIED CABLE NONMETALLIC	845C	$20,082.02		$20,082.02
12	INTRABUILDING CABLE NONMETALLIC	862C	$87.99		$87.99
13	OTHER DIGITAL EQUIPMENT	357C	$379.82		$379.82
14	**OC12 E-UDIT**				
15	CIRCUIT-DIGITAL SONET	257CS	$35,582.60		$35,582.60
16	CIRCUIT-DIGITAL SONET-PREMISES	257CSP	$46,351.98		$46,351.98
17	CONDUIT SYSTEMS	4C	$4,396.60		$4,396.60
18	UNDERGROUND CABLE NONMETALLIC	85C	$3,262.85		$3,262.85
19	BURIED CABLE NONMETALLIC	845C	$20,082.02		$20,082.02
20	INTRABUILDING CABLE NONMETALLIC	862C	$87.99		$87.99
21	OTHER DIGITAL EQUIPMENT	357C	$379.82		$379.82
22	**OC48 E-UDIT**				
23	CIRCUIT-DIGITAL SONET	257CS	$127,598.28		$127,598.28
24	CIRCUIT-DIGITAL SONET-PREMISES	257CSP	$145,504.18		$145,504.18
25	CONDUIT SYSTEMS	4C	$4,396.60		$4,396.60
26	UNDERGROUND CABLE NONMETALLIC	85C	$3,262.85		$3,262.85
27	BURIED CABLE NONMETALLIC	845C	$20,082.02		$20,082.02
28	INTRABUILDING CABLE NONMETALLIC	862C	$87.99		$87.99
29	OTHER DIGITAL EQUIPMENT	357C	$379.82		$379.82
30					
31	CIRCUIT-DIGITAL SONET-PREMISES (257CSP) investments are for the Remote Nodes. All				
32	other investments are for the Central Office Nodes.				
33					
34					

	A	B	C	D	E	F
1	Qwest Defaults 7/20/01 10:04:18 AM					South Dakota
2	Mileage Band	Fixed or DISTANCE SENSITIVE	FRC	TOTAL DIRECT	NETWORK SUPPORT	Total Investment
3	OVER 0 TO 8	FIXED	357C	992.1630691	0.187483701	992.350553
4	OVER 0 TO 8	FIXED	357CS	24.82412948	0	24.824129
5	OVER 0 TO 8	DISTANCE SENSITIVE	357C	0.137647633	0	0.137648
6	OVER 0 TO 8	DISTANCE SENSITIVE	357CS	6.982422052	0	6.982422
7	OVER 0 TO 8	DISTANCE SENSITIVE	4C	12.68811648	0	12.688116
8	OVER 0 TO 8	DISTANCE SENSITIVE	845C	0.722983479	0.35609634	1.079080
9	OVER 0 TO 8	DISTANCE SENSITIVE	85C	8.531960388	4.202308848	12.734269
10	OVER 8 TO 25	FIXED	357C	992.4340153	0.320934832	992.754950
11	OVER 8 TO 25	FIXED	357CS	34.04568123	0	34.045681
12	OVER 8 TO 25	DISTANCE SENSITIVE	357C	0.069646606	0.001203105	0.070850
13	OVER 8 TO 25	DISTANCE SENSITIVE	357CS	4.264098301	0	4.264098
14	OVER 8 TO 25	DISTANCE SENSITIVE	4C	9.198650703	0	9.198651
15	OVER 8 TO 25	DISTANCE SENSITIVE	845C	1.497687917	0.737667183	2.235355
16	OVER 8 TO 25	DISTANCE SENSITIVE	85C	6.185514102	3.046596498	9.232111
17	OVER 25 TO 50	FIXED	357C	992.4340153	0.320934832	992.754950
18	OVER 25 TO 50	FIXED	357CS	34.13589571	0	34.135896
19	OVER 25 TO 50	DISTANCE SENSITIVE	357C	0.033898589	0.004205353	0.038104
20	OVER 25 TO 50	DISTANCE SENSITIVE	357CS	1.821162986	0	1.821163
21	OVER 25 TO 50	DISTANCE SENSITIVE	4C	3.259844636	0	3.259845
22	OVER 25 TO 50	DISTANCE SENSITIVE	845C	1.438749059	0.708637596	2.147387
23	OVER 25 TO 50	DISTANCE SENSITIVE	85C	2.192040509	1.079661743	3.271702
24	OVER 50	FIXED	357C	992.2301374	0.220517332	992.450655
25	OVER 50	FIXED	357CS	27.79622864	0	27.796229
26	OVER 50	DISTANCE SENSITIVE	357C	0.033389297	0.012544496	0.045934
27	OVER 50	DISTANCE SENSITIVE	357CS	0.676009766	0	0.676010
28	OVER 50	DISTANCE SENSITIVE	4C	0.990903136	0	0.990903
29	OVER 50	DISTANCE SENSITIVE	845C	0.429437874	0.211514177	0.640952
30	OVER 50	DISTANCE SENSITIVE	85C	0.666320042	0.328187483	0.994508
31	All	FIXED	357C	992.2579764	0.234229081	992.492205
32	All	FIXED	357CS	28.42006392	0	28.420064
33	All	DISTANCE SENSITIVE	357C	0.064284955	0.007100948	0.071386
34	All	DISTANCE SENSITIVE	357CS	2.819671884	0	2.819672
35	All	DISTANCE SENSITIVE	4C	5.130570889	0	5.130571
36	All	DISTANCE SENSITIVE	845C	0.737451529	0.363222395	1.100674
37	All	DISTANCE SENSITIVE	85C	3.449986266	1.699246967	5.149233
38	These are investments outputs from the Transport Module.					

	A	B	C	D	E	F
1	Qwest Defaults 7/20/01 10:04:18 AM					South Dakota
2	**Mileage Band**	**Fixed or DISTANCE SENSITIVE**	**FRC**	**TOTAL DIRECT**	**NETWORK SUPPORT**	**Total Investment**
3	OVER 0 TO 8	FIXED	357C	1128.623665	2.270098767	1130.893764
4	OVER 0 TO 8	FIXED	357CS	374.2416856	0	374.241686
5	OVER 0 TO 8	DISTANCE SENSITIVE	357C	2.261548083	0.63140504	2.892953
6	OVER 0 TO 8	DISTANCE SENSITIVE	357CS	44.18808299	0	44.188083
7	OVER 0 TO 8	DISTANCE SENSITIVE	4C	74.67130902	0	74.671309
8	OVER 0 TO 8	DISTANCE SENSITIVE	845C	0.248593949	0.122441796	0.371036
9	OVER 0 TO 8	DISTANCE SENSITIVE	85C	50.2117593	24.73116503	74.942924
10	OVER 8 TO 25	FIXED	357C	1129.601364	2.751651603	1132.353015
11	OVER 8 TO 25	FIXED	357CS	407.1762359	0	407.176236
12	OVER 8 TO 25	DISTANCE SENSITIVE	357C	1.447719076	0.304336301	1.752055
13	OVER 8 TO 25	DISTANCE SENSITIVE	357CS	41.57715289	0	41.577153
14	OVER 8 TO 25	DISTANCE SENSITIVE	4C	75.50438527	0	75.504385
15	OVER 8 TO 25	DISTANCE SENSITIVE	845C	3.665806414	1.805546443	5.471353
16	OVER 8 TO 25	DISTANCE SENSITIVE	85C	50.77195069	25.00708019	75.779031
17	OVER 25 TO 50	FIXED	357C	1131.774662	3.822082165	1135.596744
18	OVER 25 TO 50	FIXED	357CS	480.9754434	0	480.975443
19	OVER 25 TO 50	DISTANCE SENSITIVE	357C	0.487860358	0.06353968	0.551400
20	OVER 25 TO 50	DISTANCE SENSITIVE	357CS	21.61912058	0	21.619121
21	OVER 25 TO 50	DISTANCE SENSITIVE	4C	37.75505073	0	37.755051
22	OVER 25 TO 50	DISTANCE SENSITIVE	845C	9.069836873	4.467233087	13.537070
23	OVER 25 TO 50	DISTANCE SENSITIVE	85C	25.38789723	12.5044867	37.892384
24	OVER 50	FIXED	357C	1130.050846	2.973038678	1133.023885
25	OVER 50	FIXED	357CS	427.499011	0	427.499011
26	OVER 50	DISTANCE SENSITIVE	357C	0.999100808	0.431744796	1.430846
27	OVER 50	DISTANCE SENSITIVE	357CS	10.11047945	0	10.110479
28	OVER 50	DISTANCE SENSITIVE	4C	16.84084883	0	16.840849
29	OVER 50	DISTANCE SENSITIVE	845C	1.308575256	0.644522141	1.953097
30	OVER 50	DISTANCE SENSITIVE	85C	11.32441173	5.577695331	16.902107
31	All	FIXED	357C	1129.394322	2.64967588	1132.043998
32	All	FIXED	357CS	401.947724	0	401.947724
33	All	DISTANCE SENSITIVE	357C	1.635852516	0.488861129	2.124714
34	All	DISTANCE SENSITIVE	357CS	31.42180592	0	31.421806
35	All	DISTANCE SENSITIVE	4C	53.86580386	0	53.865804
36	All	DISTANCE SENSITIVE	845C	1.535426964	0.756255072	2.291682
37	All	DISTANCE SENSITIVE	85C	36.22136552	17.84037406	54.061740
38						
39	These are investments outputs from the Transport Module.					

Section K - Unbundled Dedicated InterofficeTransport
DS3PL UNE TM Output

	A	B	C	D	E	F
1	Qwest Defaults 7/20/01 10:04:18 AM					South Dakota
2	Mileage Band	Fixed or DISTANCE SENSITIVE	FRC	TOTAL DIRECT	NETWORK SUPPORT	Total Investment
3	OVER 0 TO 8	FIXED	357C	1718.439104	51.48995533	1769.929059
4	OVER 0 TO 8	FIXED	357CS	8097.640686	0	8097.640686
5	OVER 0 TO 8	DISTANCE SENSITIVE	357C	51.70087442	14.93704771	66.637922
6	OVER 0 TO 8	DISTANCE SENSITIVE	357CS	704.7186501	0	704.718650
7	OVER 0 TO 8	DISTANCE SENSITIVE	4C	1283.900283	0	1283.900283
8	OVER 0 TO 8	DISTANCE SENSITIVE	845C	0	0	0.000000
9	OVER 0 TO 8	DISTANCE SENSITIVE	85C	863.3421969	425.2282462	1288.570443
10	OVER 8 TO 25	FIXED	357C	1722.491492	53.48590736	1775.977399
11	OVER 8 TO 25	FIXED	357CS	8233.107879	0	8233.107879
12	OVER 8 TO 25	DISTANCE SENSITIVE	357C	53.03651797	24.58927395	77.625792
13	OVER 8 TO 25	DISTANCE SENSITIVE	357CS	108.8622877	0	108.862288
14	OVER 8 TO 25	DISTANCE SENSITIVE	4C	466.6491759	0	466.649176
15	OVER 8 TO 25	DISTANCE SENSITIVE	845C	9.656635549	4.75625333	14.412889
16	OVER 8 TO 25	DISTANCE SENSITIVE	85C	313.7922236	154.5543788	468.346602
17	OVER 25 TO 50	FIXED	357C	1702.566073	43.67189501	1746.237968
18	OVER 25 TO 50	FIXED	357CS	7512.278004	0	7512.278004
19	OVER 25 TO 50	DISTANCE SENSITIVE	357C	34.92589784	14.01556486	48.941463
20	OVER 25 TO 50	DISTANCE SENSITIVE	357CS	288.9772534	0	288.977253
21	OVER 25 TO 50	DISTANCE SENSITIVE	4C	477.0861547	0	477.086155
22	OVER 25 TO 50	DISTANCE SENSITIVE	845C	0	0	0.000000
23	OVER 25 TO 50	DISTANCE SENSITIVE	85C	320.8104355	158.01111	478.821546
24	OVER 50	FIXED	357C	1716.065198	50.32071781	1766.385915
25	OVER 50	FIXED	357CS	7978.243857	0	7978.243857
26	OVER 50	DISTANCE SENSITIVE	357C	31.81453164	14.55837248	46.372904
27	OVER 50	DISTANCE SENSITIVE	357CS	197.5427152	0	197.542715
28	OVER 50	DISTANCE SENSITIVE	4C	292.4630824	0	292.463082
29	OVER 50	DISTANCE SENSITIVE	845C	33.47998284	16.4901408	49.970124
30	OVER 50	DISTANCE SENSITIVE	85C	196.6630301	96.86388052	293.526911
31	All	FIXED	357C	1716.980098	50.77134042	1767.751439
32	All	FIXED	357CS	8035.821607	0	8035.821607
33	All	DISTANCE SENSITIVE	357C	47.2674772	17.80611184	65.073589
34	All	DISTANCE SENSITIVE	357CS	394.1347183	0	394.134718
35	All	DISTANCE SENSITIVE	4C	787.6949763	0	787.694976
36	All	DISTANCE SENSITIVE	845C	6.830299967	3.364177596	10.194478
37	All	DISTANCE SENSITIVE	85C	529.6753341	260.884866	790.560200
38	These are investments outputs from the Transport Module.					

	A	B	C	D	E	F
1	Qwest Defaults	7/20/01 10:04:18 AM				South Dakota
2	Mileage Band	Fixed or Variable	FRC	TOTAL DIRECT	NETWORK SUPPORT	Total
3	Over 0 to 8	Fixed	357C	581.62	193.74	775.36
4	Over 0 to 8	Fixed	357CS	31046.00	0.00	31046.00
5	Over 0 to 8	Variable	357C	112.65	55.00	167.65
6	Over 0 to 8	Variable	357CS	3762.96	0.00	3762.96
7	Over 0 to 8	Variable	4C	3511.99	0.00	3511.99
8	Over 0 to 8	Variable	845C	0.00	0.00	0.00
9	Over 0 to 8	Variable	85C	2361.59	1163.17	3524.77
10	Over 8 to 25	Fixed	357C	596.00	198.53	794.53
11	Over 8 to 25	Fixed	357CS	31253.53	0.00	31253.53
12	Over 8 to 25	Variable	357C	185.44	91.24	276.68
13	Over 8 to 25	Variable	357CS	539.62	0.00	539.62
14	Over 8 to 25	Variable	4C	1550.15	0.00	1550.15
15	Over 8 to 25	Variable	845C	28.97	14.27	43.24
16	Over 8 to 25	Variable	85C	1042.38	513.41	1555.79
17	Over 25 to 50	Fixed	357C	525.29	174.98	700.27
18	Over 25 to 50	Fixed	357CS	30101.72	0.00	30101.72
19	Over 25 to 50	Variable	357C	118.48	58.18	176.67
20	Over 25 to 50	Variable	357CS	1331.28	0.00	1331.28
21	Over 25 to 50	Variable	4C	1558.56	0.00	1558.56
22	Over 25 to 50	Variable	845C	0.00	0.00	0.00
23	Over 25 to 50	Variable	85C	1048.03	516.19	1564.23
24	Over 50	Fixed	357C	573.20	190.93	764.13
25	Over 50	Fixed	357CS	30828.33	0.00	30828.33
26	Over 50	Variable	357C	123.18	60.58	183.75
27	Over 50	Variable	357CS	737.61	0.00	737.61
28	Over 50	Variable	4C	1103.99	0.00	1103.99
29	Over 50	Variable	845C	100.44	49.47	149.91
30	Over 50	Variable	85C	742.36	365.64	1108.00
31	Average	Fixed	357C	576.44	192.01	768.46
32	Average	Fixed	357CS	30939.97	0.00	30939.97
33	Average	Variable	357C	137.79	67.60	205.38
34	Average	Variable	357CS	2022.60	0.00	2022.60
35	Average	Variable	4C	2315.08	0.00	2315.08
36	Average	Variable	845C	20.49	10.09	30.58
37	Average	Variable	85C	1556.75	766.76	2323.50

Section K - Unbundled Dedicated InterofficeTransport
OC12PL UNE TM Output

	A	B	C	D	E	F
1	Qwest Defaults 7/20/01 10:04:18 AM					South Dakota
2	Mileage Band	Fixed or Variable	FRC	TOTAL DIRECT	NETWORK SUPPORT	Total
3	Over 0 to 8	Fixed	357C	1263.81	420.98	1684.79
4	Over 0 to 8	Fixed	357CS	87081.35	0.00	87081.35
5	Over 0 to 8	Variable	357C	233.30	114.91	348.20
6	Over 0 to 8	Variable	357CS	0.00	0.00	0.00
7	Over 0 to 8	Variable	4C	2583.78	0.00	2583.78
8	Over 0 to 8	Variable	845C	0.00	0.00	0.00
9	Over 0 to 8	Variable	85C	1737.43	855.75	2593.18
10	Over 8 to 25	Fixed	357C	1263.81	420.98	1684.79
11	Over 8 to 25	Fixed	357CS	87081.35	0.00	87081.35
12	Over 8 to 25	Variable	357C	392.60	193.37	585.96
13	Over 8 to 25	Variable	357CS	15.54	0.00	15.54
14	Over 8 to 25	Variable	4C	2581.16	0.00	2581.16
15	Over 8 to 25	Variable	845C	34.76	17.12	51.89
16	Over 8 to 25	Variable	85C	1735.67	854.88	2590.55
17	Over 25 to 50	Fixed	357C	1263.81	420.98	1684.79
18	Over 25 to 50	Fixed	357CS	87081.35	0.00	87081.35
19	Over 25 to 50	Variable	357C	299.03	147.28	446.31
20	Over 25 to 50	Variable	357CS	532.53	0.00	532.53
21	Over 25 to 50	Variable	4C	2481.29	0.00	2481.29
22	Over 25 to 50	Variable	845C	0.00	0.00	0.00
23	Over 25 to 50	Variable	85C	1668.51	821.81	2490.32
24	Over 50	Fixed	357C	1263.81	420.98	1684.79
25	Over 50	Fixed	357CS	87081.35	0.00	87081.35
26	Over 50	Variable	357C	312.30	153.82	466.13
27	Over 50	Variable	357CS	1217.38	0.00	1217.38
28	Over 50	Variable	4C	2412.46	0.00	2412.46
29	Over 50	Variable	845C	120.53	59.36	179.89
30	Over 50	Variable	85C	1622.23	799.01	2421.24
31	Average	Fixed	357C	1263.81	420.98	1684.79
32	Average	Fixed	357CS	87081.35	0.00	87081.35
33	Average	Variable	357C	302.87	149.18	452.05
34	Average	Variable	357CS	225.14	0.00	225.14
35	Average	Variable	4C	2547.67	0.00	2547.67
36	Average	Variable	845C	24.59	12.11	36.70
37	Average	Variable	85C	1713.15	843.79	2556.93

	A	B	C	D	E	F
1	Qwest Defaults	7/20/01 10:04:18 AM				South Dakota
2	Mileage Band	Fixed or Variable	FRC	TOTAL DIRECT	NETWORK SUPPORT	Total
3	Over 0 to 8	Fixed	357C	4212.70	1403.26	5615.96
4	Over 0 to 8	Fixed	357CS	287168.62	0.00	287168.62
5	Over 0 to 8	Variable	357C	777.65	383.02	1160.68
6	Over 0 to 8	Variable	357CS	0.00	0.00	0.00
7	Over 0 to 8	Variable	4C	8612.60	0.00	8612.60
8	Over 0 to 8	Variable	845C	0.00	0.00	0.00
9	Over 0 to 8	Variable	85C	5791.43	2852.50	8643.93
10	Over 8 to 25	Fixed	357C	4212.70	1403.26	5615.96
11	Over 8 to 25	Fixed	357CS	287168.62	0.00	287168.62
12	Over 8 to 25	Variable	357C	1308.65	644.56	1953.21
13	Over 8 to 25	Variable	357CS	83.79	0.00	83.79
14	Over 8 to 25	Variable	4C	8603.87	0.00	8603.87
15	Over 8 to 25	Variable	845C	115.88	57.08	172.95
16	Over 8 to 25	Variable	85C	5785.56	2849.61	8635.17
17	Over 25 to 50	Fixed	357C	4212.70	1403.26	5615.96
18	Over 25 to 50	Fixed	357CS	287168.62	0.00	287168.62
19	Over 25 to 50	Variable	357C	996.76	490.94	1487.70
20	Over 25 to 50	Variable	357CS	2872.33	0.00	2872.33
21	Over 25 to 50	Variable	4C	8270.98	0.00	8270.98
22	Over 25 to 50	Variable	845C	0.00	0.00	0.00
23	Over 25 to 50	Variable	85C	5561.71	2739.35	8301.07
24	Over 50	Fixed	357C	4212.70	1403.26	5615.96
25	Over 50	Fixed	357CS	287168.62	0.00	287168.62
26	Over 50	Variable	357C	1041.01	512.74	1553.75
27	Over 50	Variable	357CS	6566.14	0.00	6566.14
28	Over 50	Variable	4C	8041.55	0.00	8041.55
29	Over 50	Variable	845C	401.76	197.88	599.64
30	Over 50	Variable	85C	5407.43	2663.36	8070.80
31	Average	Fixed	357C	4212.70	1403.26	5615.96
32	Average	Fixed	357CS	287168.62	0.00	287168.62
33	Average	Variable	357C	1009.58	497.25	1506.83
34	Average	Variable	357CS	1214.32	0.00	1214.32
35	Average	Variable	4C	8492.22	0.00	8492.22
36	Average	Variable	845C	81.96	40.37	122.33
37	Average	Variable	85C	5710.49	2812.63	8523.11

Appendix - Factors, Investment Loadings and ICM Inputs
Expense Factors

	A	B
1	Qwest Defaults 7/20/01 10:04:18 AM	
2		
3	**Factor Description**	***South Dakota***
4		**RTU**
5	**Digital Electronic Expense - RTU 377C**	0.000000
6	***Direct Costs***	
7		
8	***Directly Assigned***	
9		**Direct**
10	**Product Management Expense**	0.025565
11	**Sales Expense**	0.009225
12	**Product Advertising Expense**	0.000000
13	**Business Fees (Other Operating Taxes)**	0.002025
14	***Directly Assigned Costs***	
15		
16	***Total Direct***	
17		
18	***Directly Attributed***	**Attributed**
19	**Network Operations**	0.040880
20	**Network Support Assets**	0.015364
21	**General Support Assets**	0.069508
22	**General Purpose Computers**	0.034714
23	**Uncollectible - Interconnect**	0.000401
24	**Accounting and Finance Expense**	0.008839
25	**Human Resources Expense**	0.008145
26	**Information Management Expense**	0.057009
27	**Intangibles**	0.002091
28		
29		
30		
31		
32	***Common***	**Common**
33	**Executive Expense**	0.007805
34	**Planning Expense**	0.000580
35	**External Relations Expense**	0.013029
36	**Legal Expense**	0.006148
37	**Other Procurement Expense**	0.002359
38	**Research and Development Expense**	0.000036
39	**Other General and Admin Exp**	0.015212

Appendix - Factors, Investment Loadings and ICM Inputs
Expense Factors

Cell: A5

Comment: The Switching Right-To-Use (RTU) factor estimates the expensed RTU switching fees that make up a portion of the annual costs associated with digital switches. The factor numerator is based on the field reporting code (FRC) of 377M (Digital Electronic Switching Maintenance) and expenditure type codes of 61A (upgrades of operating system RTU), 61C (recurring RTU fees), and 61F (upgrades of application RTU). The denominator consists of the ending balance for FRC 377C (in Account 2212, Digital Electronic Switching).

Cell: A8

Comment: Directly assigned factors are used to directly assign expenses to a product or service. That is, accounting records allow expenses to be tracked down to a particular product or service.

Cell: A10

Comment: Product Management Expense Factor

Product Management Expense, account 6611: Product management includes 1) Rate and Tariff - Development which are the costs of providing new or revised tariff offerings, making studies in support of specific dockets and to identify and analyze costs for regulatory activities and 2) Market Forecast - Management Administration and Analysis which are the costs associated with analyzing all forecasts of current and future market conditions, presenting a detailed customer profile, establishing and tracking revenue objectives, as well as performing basic office services. Product management in a interconnect marketplace will be similar to that of the retail market. In fact it will be like the product management that U S WEST performs today in its Carrier market unit which manages wholesale services such as switched and dedicated access products. In this model, U S WEST used the cost of its carrier marketing product management product group. These expenses are also adjusted with cost savings and inflation factors to bring expenses to study year.

Cell: A11

Comment: Sales Expense Factor

Sales Expense, account 6612: Included in this factor are costs incurred with performing sales contact work, servicing and implementation activities for the purpose of selling products and services to accounts in a particular market or segment. Sales expense in a interconnect marketplace will be similar to that of the retail market. In fact it will be like the Sales expense that U S WEST performs today in its Carrier market unit which manages wholesale services such as switched and dedicated access products. In this model U S WEST used the cost of its carrier marketing sales product group. These expenses are also adjusted with cost savings and inflation factors to bring expenses to study year.

Cell: A12

Comment: Product Advertising Expense Factor

Product advertising expense, account 6613: Includes costs incurred in developing and implementing promotional strategies to stimulate the purchase of products and services. This excludes non product related advertising, such as corporate image, stock and bond issue and employment advertisements, which is included in the appropriate functional accounts. Product advertising is not included in U S West's TELRIC studies. Product advertising is avoided for interconnect services and set to zero.

Cell: A13

Comment: The Business Fees factor estimates the expenses associated with other operating taxes. The factor numerator is based on account 7240 (Operating Other Taxes), specifically 7240.2 through 7240.9. The sub accounts of .2 through .9 represent gross receipts taxes, cost of franchises, capital stock taxes, superfund taxes and other taxes. The business fees denominator consists of the sum of the Directly Attributed denominator less the Business Fees numerator.

Business fees is calculated by multiplying the Total Investment Based Costs +Other Direct Expense Inputs

+ Product Management + Sales Expense + Product Advertising Expense by the Business fees factor.

Cell: A18
Comment: Directly attributed factors are used to indirectly assign or attribute expenses to a product or service. That is, accounting records do not track investments and expenses down to a product level. For example, switching equipment expenses and investments are used for a number of services. Since this equipment is shared by many products and services, the cost of switching cannot be directly assigned to any of them. However, it can be indirectly assigned or attributed through an allocation process.

Cell: A19
Comment: Network Operations
Network Operations: The numerator for this factor is Account 6532, 6534 and 6535.

Account 6532, includes costs incurred in network administration. This includes such activities as controlling traffic flow, administering traffic measuring and monitoring devices, assigning equipment and load balancing, collecting and summarizing traffic data, administering trunking and assigning interoffice facilities and circuit layout work.

Account 6534, includes costs incurred in the general administration of plant operations. This includes supervising plant operations, planning, coordinating and monitoring plant operations; and performing staff work such as developing methods and procedures, preparing and conducting training and coordinating safety programs.

Account 6535, includes costs incurred in the general engineering of the telecommunications plant which are not directly chargeable to an undertaking or project. This includes developing input to the fundamental planning process, performing preliminary work or advance planning in connection with potential undertakings, and performing special studies of an engineering nature.

These expenses are adjusted with cost savings and inflation factors to bring expenses to study year.

Cell: A20
Comment: Network Support Assets
Network Support Assets: Included in this factor are accounts 2112-2116.

Account 2112, Motor Vehicles includes the original cost of motor vehicles of those types which are designed and routinely licensed to operate on public streets and highways.

Account 2113, Aircraft includes the original cost of company owned aircraft and any associated equipment and furnishing installed as an integral part of the aircraft.

Account 2114, Special Purpose Vehicles includes the original cost of special purpose vehicles. Special purpose vehicles are self propelled and are therefore independent upon another vehicle's engine for power.

Account 2115, Garage Work Equipment includes the original cost of tools and equipment used to maintain items included in Accounts 2112, 2113, 2114. Items such as Air compressors, car hoists, garage jacks, gasoline pumps etc.

Account 2116, Other Work Equipment includes the original cost of power operated equipment, general purpose tools and other items of work equipment.

The investment in these accounts are converted to expenses to calculate a factor. This is done by

multiplying the investment dollars by an Ad Valorem factor, and Capital Costs (Cost of Money, Income Taxes and Depreciation). These investments were also adjusted by a Current Cost to Book Cost ratio and TPI's, to bring expenses to study year.

Cell: A21
Comment: General Support Assets
General Support Assets: Included in this factor are accounts 2111, 2121-23,1220, 2681.1,.9, 2682.1.

Account 2111, Land includes the original cost of all land held in fee and of easements, and similar rights in land having a term of more than one year used for purposes other than the location of outside plant or externally mounted central office equipment.

Account 2121, Buildings includes the original cost of buildings, and the cost of all permanent fixtures, machinery, appurtenances and appliances installed as a part thereof. It shall include costs incident to the construction or purchase of a building and to securing possession and title.

Account 2123, Office Equipment includes the original cost of office equipment in offices, shops and all other quarters. Account 1220, Inventories includes the cost of material and supplies held in stock and inventories of goods held for resale or lease.

Account 2681.1,9, Land and Buildings and Other are: amounts recorded in this account at the inception of a capital lease shall be equal to the original cost, if known, or to the present value not to exceed fair value, at the beginning of the lease term, of minimum lease payments during the lease term, excluding that portion of the payments representing executory costs to be paid by the lessor, together with any profit thereon.

Account 2682.1, Land & Buildings, this account shall include the original cost of lease hold improvements made to telecommunications plant held under a capital or operating lease, which are subject to amortization treatment. The investment in these accounts are converted to expenses to calculate a factor. This is done by multiplying the investment dollars by an Ad Valorem factor, and Capital Costs (Cost of Money, Income Taxes and Depreciation) where applicable. These investments were also adjusted by a Current Cost to Book Cost ratio and TPI's, to bring expenses to study

Cell: A22
Comment: General Purpose Computers
General Purpose Computers: Included in this factor are accounts 2124, 2681.3 & 4 and 2682.2.

Account 2124, General Purpose Computers includes the original cost of computers and peripheral devices which are designed to perform general administrative information processing activities.

Account 2681.3 & 4 Computers and Computer Software Capital leases, includes the amounts recorded in this account at the inception of a capital lease shall be equal to the original cost, if known, or to the present value not to exceed fair value, at the beginning of the lease term, of minimum lease payments during the lease term, excluding that portion of the payments representing executory costs to be paid by the lessor, together with any profit thereon.

Account 2682.2 Computer Leasehold Improvements, this account shall include the original cost of lease hold improvements made to telecommunications plant held under a capital or operating lease, which are subject to amortization treatment. The investment in these accounts are converted to expenses to calculate a factor. This is done by multiplying the investment dollars by an Ad Valorem factor, and Capital Costs (Cost of Money, Income Taxes and Depreciation) where applicable. These investments were also adjusted by a Current Cost to Book Cost ratio and TPI's, to bring expenses to study year where applicable.

Appendix - Factors, Investment Loadings and ICM Inputs
Expense Factors

Cell: A23
Comment: Uncollectible - Interconnect
Uncollectible - Interconnect: included in this factor is Account 5301.4 & .5 and Account 5302.

Account 5301.4 Interstate - Carrier Access Services (Uncollectibles) include the accruals to the reserve to provide for the write-offs of uncollectible interstate operating revenues arising from CABS services.

Account 5301.5 Intrastate - Carrier Access Services (Uncollectibles) include the accruals to the reserve for the write-offs of uncollectible intrastate operating revenues arising from CABS services.

Account 5302 Uncollectible Revenue - Other this account shall be charged with amounts concurrently credited to account 1190, Other Accounts Receivable, or to Account 1191, Accounts Receivable Allowance - Other, when such allowance is maintained.

Cell: A24
Comment: Accounting and Finance Expense
Accounting and Finance Expense: Included in this factor is Account 6721, Accounting and Finance Expense. This includes the costs incurred in providing accounting and financial services. These expenses are also adjusted with cost savings and inflation factors to bring expenses to study year.

Cell: A25
Comment: Human Resources Expense
Human Resources Expense: Included in this factor is Account 6723, Human Resources Expense. This includes the costs incurred in performing personnel administration activities such as Equal Employment Opportunity and Affirmative Action Programs, General Employment Services, Employee data for forecasting, planning and reporting etc. These expenses are also adjusted with cost savings and inflation factors to bring expenses to study year.

Cell: A26
Comment: Information Management Expense
Information Management Expense, account 6724: Included in this factor are costs incurred in planning, developing, testing, implementing and maintaining data bases and application systems for general purpose computers. These expenses are also adjusted with cost savings and inflation factors to bring expenses to study year.

Cell: A27
Comment: Intangibles
Intangibles, Account 2690: Includes the cost of organizing and incorporating the company, the original cost of government franchise, the original cost of patent rights, and other intangible property having a life of more than one year and uses in connection with the company's telecommunications. The investment in this account is converted to expense to calculate the factor. This is done by multiplying the investment dollars by Cost of Money & Income Tax factors. These expenses are also adjusted with inflation factors to bring expenses to study year.

Cell: A32
Comment: Common factors are developed for expenses that cannot be directly or indirectly assigned to a service but

are needed for the operation of the business that provides the service (i.e., executive expense.)

Cell: A33
Comment: Executive Expense
Executive Expense, account 6711: Included in this numerator is executive expense which shall include costs incurred in formulating corporate policy and in providing overall administration and management. These expenses are also adjusted with cost savings and inflation factors to bring expenses to study year.

Cell: A34
Comment: Planning Expense
Planning Expense, account 6712: Included in this factor are costs incurred in developing and evaluating long-term courses of action for the future operations of the Company. This includes performing corporate organization and integrated long-range planning, including management studies, options and contingency plans, and economic strategic analysis. These expenses are also adjusted with cost savings and inflation factors to bring expenses to study year.

Cell: A35
Comment: External Relations Expense
External Relations Expense, account 6722: Included in this factor are costs incurred in maintaining relations with government, regulators, other companies and the general public. These expenses are also adjusted with cost savings and inflation factors to bring expenses to study year.

Cell: A36
Comment: Legal Expense
Legal Expense, account 6725: Included in this factor are costs incurred in providing legal services. This includes conducting and coordinating litigation, providing guidance on regulatory and labor matters, preparing, reviewing and filing patents and contracts and interpreting legislation. These expenses are also adjusted with cost savings and inflation factors to bring expenses to study year.

Cell: A37
Comment: Other Procurement Expense
Other Procurement Expense, account 6726: Included in this factor are costs incurred in procuring material and supplies, including office supplies. These expenses are also adjusted with cost savings and inflation factors to bring expenses to study year.

Cell: A38
Comment: Research and Development Expense
Research and Development Expense, account 6727: Included in this factor are costs incurred in making planned search or critical investigation aimed at discovery of new knowledge. These expenses are also adjusted with cost savings and inflation factors to bring expenses to study year.

Cell: A39
Comment: Other General and Administrative Expenses
Other General and Administrative Expenses, account 6728: Included in this factor are costs incurred in performing general administrative activities not directly charged to the user, and not provided for in other accounts. This includes providing general reference libraries, food services, archives, general security investigation services, operating official private branch exchanges in the conduct of the business and

telecommunications and mail services. These expenses are also adjusted with cost savings and inflation factors to bring expenses to study year.

Appendix - Factors, Investment Loadings and ICM Inputs
Investment Based Factors

CAPCOST FACTORS								
Qwest Defaults 7/20/01 10:04:18 AM								
		Cost_of_Money	0.1014	PreTax COM	0.13984615		State:	South Dakota
		Cost_of_Debt	0.075	PostTax COM	0.0909			
		Debt_Ratio	0.4					
		Discount_Rate	0.1014					
			Depreciation	Cost of Money	Income Tax	Total CAPCOST	Ad Valorem	Maintenance
Acct	FRC	Account Name	A	B	C	D	E	F
2111	20C	Land	0.000000	0.096506	0.036495	0.133002	0.008613	0.022353
2212	164C	Motor Vehicles	0.111497	0.049522	0.018727	0.179746	0.008613	
2112	1364C	Aircraft	0.000000	0.000000	0.000000	0.000000	0.008613	
2114	464C	Spec. Purpose Vehicles	0.064286	0.054508	0.020613	0.139407	0.008613	
2115	264C	Garage Work Equipment	0.071429	0.052772	0.019956	0.144156	0.008613	
2116	564C	Other Work Equipment	0.065714	0.054161	0.020482	0.140357	0.008613	
2121	110C	Building	0.025821	0.074869	0.028313	0.129003	0.008613	0.022353
2122	161C	Furniture	0.075688	0.049290	0.018640	0.143619	0.008613	
2123	261C	Office Equipment	0.107909	0.050794	0.019208	0.177912	0.008613	
2124	361C	General Purpose Comp.	0.164850	0.047620	0.018008	0.230478	0.008613	
2212	377C	Digital Switch	0.108910	0.045445	0.017186	0.171541	0.008613	0.020939
2220	117C	Operator Systems	0.127964	0.045130	0.017067	0.190161	0.008613	0.036430
2231	67C	Radio Microwave	0.107035	0.052004	0.019666	0.178705	0.008613	0.005877
2232.1	157C	Digital Data System	0.101968	0.044769	0.016930	0.163666	0.008613	0.004850
2232.2	257C	Pair Gain—Digital	0.109717	0.045455	0.017189	0.172361	0.008613	0.011820
2232.2	257CS	Pair Gain—Digital	0.109717	0.045455	0.017189	0.172361	0.008613	0.011420
2232.2	257CSP	Pair Gain—Digital	0.109717	0.045455	0.017189	0.172361	0.008613	0.011420
2232.3	357C	Other Digital Equipment	0.109717	0.045455	0.017189	0.172361	0.008613	0.032898
2232.3	357CS	Other Digital Equipment	0.109717	0.045455	0.017189	0.172361	0.008613	0.032498
2232.4	457C	Pair Gain—Analog	0.160932	0.045151	0.017075	0.223158	0.008613	0.038881
2232.5	57C	Other Analog Equipment	0.160932	0.045151	0.017075	0.223158	0.008613	0.012524
2351	188C	Public Telephones	0.118750	0.056788	0.021475	0.197013	0.008613	-
2362	858C	Chan. Term. Eq.	0.131250	0.052536	0.019867	0.203653	0.008613	0.022759
2411	1C	Poles	0.122572	0.036893	0.013952	0.173417	0.008613	0.032460
2421.11,.21	52C	Aerial Cbl Metallic	0.105201	0.054376	0.020563	0.180141	0.008613	0.131511
2421.11	42C	Aerial Drop	0.105201	0.054376	0.020563	0.180141	0.008613	0.131511
2421.12,.22	852C	Aerial Cbl Nonmetallic	0.082636	0.054888	0.020757	0.158281	0.008613	0.020059
2422.11,.21	5C	UG Cbl Metallic	0.090987	0.056203	0.021254	0.168443	0.008613	0.024153
2422.12,.22	85C	UG Cbl Nonmetallic	0.070742	0.056557	0.021388	0.148687	0.008613	0.007097
2423.11,.21	45C	Buried Cbl Metallic	0.060902	0.057059	0.021578	0.139540	0.008613	0.047717
2423.11	35C	Buried Drop	0.060902	0.057059	0.021578	0.139540	0.008613	0.047717
2423.12,.22	845C	Buried Cbl Nonmetallic	0.060902	0.057059	0.021578	0.139540	0.008613	0.011263
2424.11,.21	6C	Submarine Cbl., Exch., Metallic	0.053220	0.058893	0.022271	0.134384	0.008613	0.006884
2424.12,.22	86C	Submarine Cbl., Exch., Nonmetallic	0.053220	0.058893	0.022271	0.134384	0.008613	0.006884
2426.1	62C	Intrabuilding Cbl., Exch., Metallic	0.062692	0.058372	0.022074	0.143138	0.008613	0.023289
2426.2	862C	Intrabuilding Cbl., Exch., Nonmetallic	0.062692	0.058372	0.022074	0.143138	0.008613	0.006920
2431	3C	Aerial Wire	0.274000	0.091689	0.034674	0.400363	0.008613	0.010002
2441	4C	Conduit System	0.021443	0.064600	0.024429	0.110473	0.008613	0.005558

Appendix - Factors, Investment Loadings and ICM Inputs
Investment Based Factors

Cell: D7

Comment: Depreciation

Two types of depreciation are involved in the determination of recurring capital costs - book depreciation and tax depreciation. Book depreciation is the repayment of invested capital and is a direct component of capital costs. On the other hand, tax depreciation is not a component of capital cost, but is a schedule of expense deductions used in determining income tax expense. Both depreciation amounts must be separately calculated because most likely, they will differ in timing and amount.

Book depreciation amounts are determined by: (1) total investment, less net salvage, in assets: and (2) estimated life characteristics. The life characteristics are average economic life and survivor shape that are either anticipated or actually experienced at U S West Communications. Several methods are available to calculate book depreciation, however at U S West Communications, the straight-line equal-life group (ELG) method is applied. For service costs studies, ELG allows the depreciation amounts per unit to be "deaveraged" within each vintage of a category.

Tax depreciation is of interest because of its effect on income taxes. Tax depreciation is calculated separately from book depreciation because amounts and timing will differ from book depreciation. This is because, for example, income tax regulations permit using accelerated tax depreciation on most new investments. With accelerated tax depreciation, tax deduction amounts are claimed in greater amounts during the earlier years of an asset's life than during the later years.

To summarize, book depreciation repays capital and is a component cost; whereas, tax depreciation determines the expense deduction used in determining income tax liability.

Cell: E7

Comment: Post Tax Income (Return) (Cost Of Money)

Although invested capital can be repaid in various ways over its life, the capital repayment required will always be the same. However, the cost for the use of this capital varies directly with the time it takes to pay it back. An analogous situation for individuals would be the interest costs on the remaining balance of a home mortgage, which depend on the length of the mortgage. For example, more total interest is paid on a 30-year mortgage than on a mortgage lasting 25 years.

In cost studies, these interest costs are the return owed the investors for the use of their capital, and the company would need to pay this return until capital is fully repaid. The sum of the capital repayment and the associated return is called the capital recovery cost. Of course, in actual practice, investors are partially paid back directly (dividends), and the remaining capital repayment (retained earnings) is reinvested in new plant on behalf of them.

Because the assumed rate is the interest cost of an investment, it is often called the cost of money. And this cost of money is really a composite of the different returns for debt and equity capital. The proportion of debt and equity in the company's capital structure is therefore expressed as the debt ratio, and is used to calculate the composite cost of money as follows:

COMPOSITE COST OF MONEY = (DEBT RATIO X % COST OF DEBT)+(EQUITY RATIO X % COST OF EQUITY)

WHERE; EQUITY RATIO = (1-DEBT RATIO)

The composite cost of money is then used to calculate a schedule of equal payments made over time to repay both capitalized amounts, and a return amount to the investor. Even though each payment is the same, the

apportionment between repayment of invested capital and return to the investor changes. The share representing invested capital repaid increases with each payment, and therefore, return to the investor decreases with each payment. Likewise, the principle portion of a home mortgage monthly payment increases each month, and the interest portion declines, even though, the total monthly payment remains the same.

The amount of money representing the return to the investors is called Post Tax Income. The title "post tax income" is somewhat of a misnomer however, since only return on equity is truly post tax income; return on debt is applied as a reduction to revenue thereby reducing taxable income used to compute income tax expense.

Cell: F7
Comment: Income Tax Expense
Along with capital repayment and return, income taxes are incurred on the return required for the equity portion of the capital. Income taxes are involved because federal and state tax regulations provide for taxing remaining income after payment of operations costs and other deductible amounts. These income taxes are then a portion of the revenue required to meet the capital costs of the undertaking.

Income tax expense does not reflect the actual taxes U S West pays; but instead, it represents the taxes that are reported as paid on the income statement. The difference between the income tax expense and the taxes owed (paid) is due to the treatment of accelerated depreciation.

Cell: G7
Comment: Total Capital Costs
In summary, total capital costs consist of three components: capital repayment (depreciation), return (post tax income) and income tax expense. The sum of the first two components, depreciation and post tax income, has been defined as capital recovery. The present worth of the capital costs is therefore the sum of the present worth of the capital recovery costs and the present worth of the tax expenses.

Cell: H7
Comment: The Ad Valorem Tax Factor is used to provide an estimate of the Ad Valorem tax costs that are associated with investments. It was developed for use in estimating the total operating expense associated with central office equipment. public coin equipment, and outside plant equipment. The data sources utilized for this are (numerator) Account 7240.1 Property Taxes and (denominator) Account 2001 Total Telephone Plant in Service.

Cell: I7
Comment: There are 23 maintenance factors. Each of these maintenance factors are developed on a state by state basis using expenses and investments relative to the account under study.

Maintenance factors are developed by taking the adjusted levels of 'M' expense dollars and dividing them by adjusted investment associated with a particular account. Power, subscriber line testing and trunk testing factors are added to most accounts to get the final maintenance factor. Maintenance expense is calculated by multiplying the maintenance factor times total investment for an account under study.

Appendix - Factors, Investment Loadings and ICM Inputs
Billing

	A	B	C	D	E	F
1	BASIC SERVICE: U S WEST COST RESULTS FOR MODEL INPUT					
2	FACTORS INCLUDED: NONE					
3	STUDY YEAR: 2000 - USW					
4	MINUTE OF USE - IABS (LIS SWITCHING AND PORTS)					
5						
6	Unit: Minute of Use					MOU
7						
8	TOTAL					
9		INVESTMENT				$0.000111
10		EXPENSE				$0.000277
11						
12						
13	BILLING AND COLLECTION: U S WEST COST RESULTS FOR MODEL INPUT					
14	FACTORS INCLUDED: NONE					
15	STUDY YEAR: 2000 - USW WHOLESALE					
16	ACCOUNT - CRIS (LIS - LINK AND SPNP)					
17						
18	Unit: Per Electronically Billed Line					ACCOUNT
19						
20	TOTAL					
21		INVESTMENT				$0.000112
22		EXPENSE				$0.016467
23						
24						
35						
36	BILLING AND COLLECTION: U S WEST COST RESULTS FOR MODEL INPUT					
37	FACTORS INCLUDED: NONE					
38	STUDY YEAR: 2000 - USW					
39	FACTOR DEVELOPMENT - IABS (LIS DEDICATED, COLOCATION, EICT)					
40						
41	Unit: Factor					0.004304
42						
43	MESSAGE TOLL SERVICE: U S WEST COST RESULTS FOR MODEL INPUT					
44	FACTORS INCLUDED: NONE					
45	STUDY YEAR: 2000 - USW WHOLESALE					
46	MTS - CRIS (DA AND OPR. SVCS.)					
47						
48	Class of Service: MTS per Message					ACCOUNT
49						
50	TOTAL					
51		INVESTMENT				$0.000095
52		EXPENSE				$0.014184
53						
54						
55	Sheet Updated on 2/2/2001					

Appendix - Factors, Investment Loadings and ICM Inputs
Billing

Cell: A6
Comment: Per Minute is based on originating plus terminating end office switching minutes.

Appendix - Factors, Investment Loadings and ICM Inputs
L & B Factors

	A	B	C	D	E
1	Qwest Defaults 7/20/01 10:04:18 AM				
2	CENTRAL OFFICE LAND AND BUILDING				
3	These are not calculated in the Model				
4		Jan-01			
5					
6		BLDG TO	BLDG TO	LAND TO	LAND TO
7		SWITCH	CIRCUIT	SWITCH	CIRCUIT
8		FACTOR	FACTOR	FACTOR	FACTOR
9					
10	South Dakota	0.0537	0.0536	0.0014	0.0014

Appendix - Factors, Investment Loadings and ICM Inputs
Investment Loadings

2001 Investment Loadings						
Not calculated in model						
	Power	**Sales Tax**	**Telco Engineering**	**Interest During Construction**	**Total Loading Factor**	
	A	B	C	D	E=((1+A)*(1+B)*(1+C))/(1-D)	
South Dakota	0.0697	0.0564	0.1105	0.0061	**1.2626**	
These Investment Loadings are defined in the Investment Loading Factors Technical Description (Loadings.pdf)						

Appendix - Factors, Investment Loadings and ICM Inputs
Investment Loadings

Cell: B4
Comment: The purpose the Power and Miscellaneous Equipment factor is to estimate the investment in power plant required to provide back-up power for central office equipment, and to estimate any miscellaneous equipment investment not included in the Engineered, Furnished and Installed (EF&I) investment (i.e., tools, ladders, miscellaneous frames and portable generators).

Cell: C4
Comment: The purpose of the sales tax factor is to provide an estimate of the sales tax costs that are associated with investments. The factor can be used, in conjunction with other factors and data, to develop total installed investment.

Cell: D4
Comment: The purpose of the Telco Engineering Factor is to estimate the U S WEST Communications labor costs, over and above the engineered, furnished and installed (EF&I) costs, which are capitalized as part of central office (CO) equipment installation.

Cell: E4
Comment: The Interest During Construction (IDC) factor is used to estimate the interest that accrues during the time plant is under construction. It is, in effect, the Prime Rate (Rate of Return in state of Colorado) applied to the plant under construction and accounts for the return needed from the time of asset acquisition to the provisioning of service.

Appendix - Factors, Investment Loadings and ICM Inputs

Run Data

	A	B	C
1	Qwest Defaults 7/20/01 10:04:18 AM		
2			**Run_Name**
3	Run Name		Qwest Defaults 7/20/01 10:04:18 AM
4	Version		2.2
5			**State**
6	State		South Dakota
7			**Zone_Type**
8	Zone Type		MSA
19	Study ID		5393
20		**Local Usage**	
21	**Description**		**Run Data**
22			
23			**Usage**
24	Average_Hold_Time		2.525089817
25	Billing_and_Collection_Investment		0.00011100
26	Billing_and_Collection_Direct_Expenses		0.00027700
27	Intercept_Direct_Expenses		0.00001600
28	HP_Measurement_Investments		0.00035400
29	HP_Measurement_Expenses		0.00005000
30	AMA_Investments		0.00361644
31			
32		**Unbundled Loop**	
33	**Description**		**Run Data**
34			**Loop**
35	Unbundled Loop Grooming Investment		$63.80
36	Loop Billing and Collection Expense		$0.016467
37			
38		**DS1**	
39	**Description**	**FRC**	**Run Data**
40	**DS1 Entrance Facility**		**DS1_Entrance_Facility**
41	CIRCUIT-OTHER DIGITAL	357C	$274.72
42	CIRCUIT-SUB PAIR GAIN-DIGITAL	257C	$673.32
43	CIRCUIT-SUB PAIR GAIN-DIGITAL	257CP	$791.26
44	CIRCUIT-SUB PAIR GAIN-DIGITAL	257CS	$509.58
45	CIRCUIT-SUB PAIR GAIN-DIGITAL	257CSP	$676.48
46	POLES	1C	$6.25
47	C WIRE	3C	$0.30
48	CONDUIT SYSTEMS	4C	$207.36
49	UNDERGROUND CABLE METALLIC	5C	$109.09
50	BURIED DROP	35C	$23.84
51	AERIAL DROP	42C	$4.22
52	BURIED CABLE METALLIC	45C	$330.95
53	AERIAL CABLE METALLIC	52C	$11.82
54	INTRABUILDING CABLE METALLIC	62C	$65.28
55	UNDERGROUND CABLE NONMETALLIC	85C	$93.37
56	BURIED CABLE NONMETALLIC	845C	$459.63
57	INTRABUILDING CABLE NONMETALLIC	862C	$2.43
58	**MULTIPLEXING DS1 TO DSO**	257C	$10,619.94
59			
60		**DS3**	
61	**Description**	**FRC**	**Run Data**
62	**DS3 Entrance Facility**		**DS3_Entrance_Facility**
63	CIRCUIT-OTHER DIGITAL	357C	$1,677.66
64	CIRCUIT-DIGITAL	257C	$158.76
65	CIRCUIT-DIGITAL SONET	257CS	$5,532.07
66	CIRCUIT-DIGITAL-PREMISES	257CP	$68.02
67	CIRCUIT-DIGITAL SONET-PREMISES	257CSP	$10,406.39
68	POLES	1C	$0.00
69	CONDUIT SYSTEMS	4C	$1,159.58
70	UNDERGROUND CABLE METALLIC	5C	$0.00
71	BURIED DROP	35C	$0.00
72	AERIAL DROP	42C	$0.00
73	BURIED CABLE METALLIC	45C	$0.00
74	AERIAL CABLE METALLIC	52C	$0.00
75	INTRABUILDING CABLE METALLIC	62C	$0.00
76	UNDERGROUND CABLE NONMETALLIC	85C	$859.45
77	BURIED CABLE NONMETALLIC	845C	$2,532.26
78	INTRABUILDING CABLE NONMETALLIC	862C	$26.57
79	**MULTIPLEXING DS3 TO DS1**	257C	$11,272.44
80			
81		**Analog Line Port**	
82			**Port**
83	BRI Capital lease period - Years		10
84	BRI SW 1 Capital Lease Expense / Port		100
85	BRI SW 2 Capital Lease Expense / Port		150
86	ISDN BRI Number of SW1 ISDN EO w/X.75 Links		12

Appendix - Factors, Investment Loadings and ICM Inputs

Run Data

	A	B	C
1	Qwest Defaults 7/20/01 10:04:18 AM		
87	ISDN BRI Number of SW2 ISDN EO w/X.75 Links		0
88	ISDN BRI Number of ISDN Digipac Switches		2
89	ISDN BRI % Digipac Traffic Originating from ISDN		10%
90	ISDN BRI DS1s per Packet Switch Link		1
91	ISDN BRI Number of Links between Packet Switches		1
92	ISDN BRI Average Mileage between End Offices and DACS		76.62
93	ISDN BRI Average Mileage between Packet Switches		326.2
94	ISDN BRI Number of Trunk Ports per Packet Switch		2
95	ISDN BRI SW1 x.75 End Office DS1 Port Investment	$	6,906.00
96	ISDN BRI SW2 x.75 End Office DS1 Port Investment	$	7,890.00
97	ISDN BRI X.75 Digipac Port (Incoming or Outgoing) Investment	$	15,147.00
98	DS0 Analog Trunk Equipment Utilization Factor		73.23%
99	% Analog DID Trunk Ports		0.18%
100	Investment for DSX-1 Cross-Connect Panel For DID Trunk Port	$	17.49

Appendix - Factors, Investment Loadings and ICM Inputs

Run Data

	A	B	C	
1	Qwest Defaults 7/20/01 10:04:18 AM			
158				
177		**Shared Transport**		
178				**ST**
179	Miles (Default is from SLUS)			7.61
180	End Office to End Office Weighting			54.46%
181	End Office to Local Tandem Weighting			8.62%
182	End Office to Access Tandem Weighting			36.92%
183				
184	All Values are based on Default or Overrides entered by the user			
185				
186		**OCN E-UDIT**		
223				
224	**OC3 E-UDIT**		OC3EUDIT	
225	CIRCUIT-DIGITAL SONET	257CS		$15,972.28
226	CIRCUIT-DIGITAL SONET-PREMISES	257CSP		$23,652.02
227	CONDUIT SYSTEMS	4C		$4,396.60
228	UNDERGROUND CABLE NONMETALLIC	85C		$3,262.85
229	BURIED CABLE NONMETALLIC	845C		$20,082.02
230	INTRABUILDING CABLE NONMETALLIC	862C		$87.99
231	OTHER DIGITAL EQUIPMENT	357C		$379.82
232	**OC12 E-UDIT**		OC12EUDIT	
233	CIRCUIT-DIGITAL SONET	257CS		$35,582.60
234	CIRCUIT-DIGITAL SONET-PREMISES	257CSP		$46,351.98
235	CONDUIT SYSTEMS	4C		$4,396.60
236	UNDERGROUND CABLE NONMETALLIC	85C		$3,262.85
237	BURIED CABLE NONMETALLIC	845C		$20,082.02
238	INTRABUILDING CABLE NONMETALLIC	862C		$87.99
239	OTHER DIGITAL EQUIPMENT	357C		$379.82
240	**OC48 E-UDIT**		OC48EUDIT	
241	CIRCUIT-DIGITAL SONET	257CS		$127,598.28
242	CIRCUIT-DIGITAL SONET-PREMISES	257CSP		$145,504.18
243	CONDUIT SYSTEMS	4C		$4,396.60
244	UNDERGROUND CABLE NONMETALLIC	85C		$3,262.85
245	BURIED CABLE NONMETALLIC	845C		$20,082.02
246	INTRABUILDING CABLE NONMETALLIC	862C		$87.99
247	OTHER DIGITAL EQUIPMENT	357C		$379.82

South Dakota Public Utilities Commission
Docket No. TC 01_____
Qwest Corporation

Attachment 2

Study No. 5336
Collocation

Study ID #5336

Version 1.0 Created 7/12/01, 4:35:46 PM

South Dakota

Qwest

Collocation Model (CM) Interconnection TELRIC Results

2001 Cost Study



CM Output
Table of Contents

Description	Section
Summary of Results	A
Development of Total Product Costs	B
Investment Cost Calculation	C
Defaults and Overrides	D
Expense and Investment Development	E
Expense Factors	F
Investment Factors	G
Land and Building Factors	H
Run Data	I

Version 1.0 Created 7/12/01, 4:35:46 PM			
South Dakota			
		90 Day	
	Units	Initial Charge (sA p6-9)	Monthly Rate (sA p6-9)
1 Standard Collocation			
1.1 Terminations			
DS0			
Cable Placement	Per Block	$249.71	$0.3680
	Per Termination	$4.69	$0.0069
Cable	Per Block	$321.21	$0.4733
	Per Termination	$4.40	$0.0065
Blocks	Per Block	$556.38	$0.8199
	Per Termination	$7.62	$0.0112
Block Placement	Per Block	$258.99	$0.3816
	Per Termination	$3.55	$0.0052
DS1			
Cable Placement	Per Block	$415.32	$1.0259
	Per Termination	$44.66	$0.1103
Cable	Per Block	$370.82	$0.9160
	Per Termination	$39.87	$0.0985
Panel	Per Block	$420.35	$1.0384
	Per Termination	$50.48	$0.1247
Panel Placement	Per Block	$88.62	$0.2189
	Per Termination	$9.53	$0.0235
DS3			
Cable Placement	Per Termination	$169.09	$0.4177
Cable	Per Termination	$239.46	$0.5915
Panel/Connector	Per Termination	$245.19	$0.6057
Panel/Connector Placement	Per Termination	$25.45	$0.0629
1.2 Entrance Facility			
Standard Shared	Per Fiber	$634.70	$6.38
Cross Connect	Per Fiber	$744.42	$6.65
Express	Per Cable	$9,273.91	$100.38
1.3 Cable Splicing			
Setup	Per Setup	$487.14	
Per fiber Spliced	Per Fiber	$36.86	

Version 1.0 Created 7/12/01, 4:35:46 PM			
South Dakota			
		90 Day	
	Units	Initial Charge (sA p6-9)	Monthly Rate (sA p6-9)
1.4 Power Usage			
Power Plant per Amp Ordered			
Power Plant Less than 60 AMPS	Per AMP Ordered		$13.13
Power Plant Equal to or Greater than 60 Amps	Per AMP Ordered		$8.69
Power Usage-Less than 60 AMPS	Per AMP Ordered		$2.16
Power Usage-More than 60 AMPS	Per AMP Used		$4.32
Backup AC Power Feed Usage			
120 V	Per Amp Per Month		$18.78
208 V, Single Phase	Per Amp Per Month		$32.55
208 V, Three Phase	Per Amp Per Month		$56.31
240 V, Single Phase	Per Amp Per Month		$37.56
240 V, Three Phase	Per Amp Per Month		$64.98
480 V, Three Phase	Per Amp Per Month		$129.96
Backup AC Power Cable			
20 Amp, Single Phase	Per Foot, Per Month	$7.75	$0.0191
20 Amp, Three Phase	Per Foot, Per Month	$9.61	$0.0237
30 Amp, Single Phase	Per Foot, Per Month	$8.36	$0.0207
30 Amp, Three Phase	Per Foot, Per Month	$11.48	$0.0284
40 Amp, Single Phase	Per Foot, Per Month	$9.83	$0.0243
40 Amp, Three Phase	Per Foot, Per Month	$13.53	$0.0334
50 Amp, Single Phase	Per Foot, Per Month	$11.66	$0.0288
50 Amp, Three Phase	Per Foot, Per Month	$16.28	$0.0402
60 Amp, Single Phase	Per Foot, Per Month	$13.19	$0.0326
60 Amp, Three Phase	Per Foot, Per Month	$18.74	$0.0463
100 Amp, Single Phase	Per Foot, Per Month	$16.33	$0.0403
100 Amp, Three Phase	Per Foot, Per Month	$25.49	$0.0630
1.5 Security			
Access Card	Per Employee		$0.81
Card Access	Per Person per Office per Month		$6.68
1.6 Central office Clock Synchronization	Per Port		$7.55
1.7 Interconnection Tie Pair			
DS0	Per Connection		$0.47
DS1	Per Connection		$1.62
DS3	Per Connection		$16.30

Version 1.0 Created 7/12/01, 4:35:46 PM			
South Dakota			
		90 Day	
	Units	Initial Charge (sA p6-9)	Monthly Rate (sA p6-9)
2 Cageless Collocation			
2.1 Space Construction			
No QPF Retained	Space for 2 Bays, 1 40 Amp Power Ca	$27,411.53	$67.71
If contract has provisions to collect and retain a Quote Preparation fee that fee would be deducted from the space construction charge			
DC Power Cable-Change to standard design			
20 Amp-Initial Feed Only	Per Initial Power Feed	($1,879.77)	($4.64)
30 Amp-Initial Feed Only	Per Initial Power Feed	($1,192.70)	($2.95)
40 Amp-Initial Feed Only	Per Initial Power Feed	N/A	N/A
60 Amp-Initial Feed Only	Per Initial Power Feed	$2,095.41	$5.18
Each Additional Bay	Per Bay	$2,482.44	$6.13
DC Power Cable-Additional Power Cables			
20 Amp-Does not apply to initial power feed	Per Additional Feed	$4,889.34	$12.08
30 Amp-Does not apply to initial power feed	Per Additional Feed	$5,576.42	$13.77
40 Amp-Does not apply to initial power feed	Per Additional Feed	$6,769.12	$16.72
60 Amp-Does not apply to initial power feed	Per Additional Feed	$8,864.53	$21.90
2.2 Rent	Per Square Foot		$3.0490
2.3 Quote Preparation Fee	Per Collocation Ordered	$4,255.11	

Version 1.0 Created 7/12/01, 4:35:46 PM			
South Dakota			
		90 Day	
	Units	Initial Charge (sA p6-9)	Monthly Rate (sA p6-9)
3 Caged Collocation			
3.1 Space Construction			
Cage-Up to 100 Sq Ft	Cage&1 60 Amp Feed	$49,237.13	$121.63
Cage-101 Sq Ft to 200 Sq Ft	Cage&1 60 Amp Feed	$51,129.93	$126.30
Cage-201 Sq Ft to 300 Sq Ft	Cage&1 60 Amp Feed	$52,601.81	$129.94
Cage-301 Sq Ft to 400 Sq Ft	Cage&1 60 Amp Feed	$54,446.35	$134.49
Space Construction - Fencing Credit			
Cage-Up to 100 Sq Ft - Fencing Credit	Cage	($5,321.82)	($13.15)
Cage-101 Sq Ft to 200 Sq Ft - Fencing Credit	Cage	($6,635.52)	($16.39)
Cage-201 Sq Ft to 300 Sq Ft - Fencing Credit	Cage	($7,453.23)	($18.41)
Cage-301 Sq Ft to 400 Sq Ft - Fencing Credit	Cage	($8,230.72)	($20.33)
If contract has provisions to collect and retain a Quote Preparation fee that fee would be deducted from the space construction charge			
DC Power Cable-Change to standard design			
20 Amp-Initial Feed Only	Per Initial Power Feed	($7,458.44)	($18.42)
30 Amp-Initial Feed Only	Per Initial Power Feed	($6,815.59)	($16.84)
40 Amp-Initial Feed Only	Per Initial Power Feed	($5,461.04)	($13.49)
60 Amp-Initial Feed Only	Per Initial Power Feed	NA	NA
100 Amp-Initial Feed Only	Per Initial Power Feed	$9,095.51	$22.47
200 Amp-Initial Feed Only	Per Initial Power Feed	$29,367.10	$72.54
300 Amp-Initial Feed Only	Per Initial Power Feed	$56,703.84	$140.07
400 Amp-Initial Feed Only	Per Initial Power Feed	$86,837.37	$214.51
DC Power Cable-Added Power Feeds			
20 Amp-Does not apply to initial power feed	Per Additional Feed	$6,123.09	$15.13
30 Amp-Does not apply to initial power feed	Per Additional Feed	$6,765.95	$16.71
40 Amp-Does not apply to initial power feed	Per Additional Feed	$8,120.50	$20.06
60 Amp-Does not apply to initial power feed	Per Additional Feed	$13,581.54	$33.55
100 Amp-Does not apply to initial power feed	Per Additional Feed	$22,677.05	$56.02
200 Amp-Does not apply to initial power feed	Per Additional Feed	$42,948.64	$106.09
300 Amp-Does not apply to initial power feed	Per Additional Feed	$70,285.38	$173.62
400 Amp-Does not apply to initial power feed	Per Additional Feed	$100,418.91	$248.06
3.2 Grounding			
#2 AWG	Per Foot	$10.80	$0.0267
1/0 AWG	Per Foot	$18.48	$0.0457
4/0 AWG	Per Foot	$21.29	$0.0526
350 KCMIL	Per Foot	$28.68	$0.0709
500 KCMIL	Per Foot	$32.47	$0.0802
750 KCMIL	Per Foot	$56.14	$0.1387
3.3 Rent	Per Square Foot		$3.05
3.4 Quote Preparation Fee	Per Collocation Ordered	$4,626.54	

Version 1.0 Created 7/12/01, 4:35:46 PM			
South Dakota			
		90 Day	
	Units	Initial Charge (sA p6-9)	Monthly Rate (sA p6-9)

Version 1.0 Created 7/12/01, 4:35:46 PM			
South Dakota			
		90 Day	
	Units	Initial Charge (sA p6-9)	Monthly Rate (sA p6-9)
4 Virtual Collocation			
4.1 Equipment Bay	Per Shelf		$3.89
4.2 Labor			
Maintenance - Regular Business Hours	Per 1/2 Hour	$27.17	
Maintenance - Outside Regular Business Hours	Per 1/2 Hour	$36.36	
Training - Regular Business Hours	Per 1/2 Hour	$27.17	
Inspector - Regular Business Hours	Per 1/2 Hour	$30.98	
Inspector - Outside Regular Business Hours	Per 1/2 Hour	$39.89	
Installation - Regular Business Hours	Per 1/2 Hour	$30.98	
Installation - Outside Regular Business Hours	Per 1/2 Hour	$39.89	
Engineering - Regular Business Hours	Per 1/2 Hour	$29.32	
Engineering - Outside Regular Business Hours	Per 1/2 Hour	$37.84	
4.3 Quote Preparation Fee	Per Collocation Ordered	$4,255.11	

South Dakota
Interconnection Services
Collocation

Cost Element	Investment sB r1	TELRIC sB r28	Common sB r38	TELRIC + Common
Version 1.0 Created 7/12/01, 4:35:46 PM				
1 Standard Collocation				
1.1 Terminations				
1.1.1 Terminations - 45 Day Installation				
1.1.2 Terminations - 90 Day Installation				
DS0 - 90 Day Installation				
DS0 Cable Placement per 100 Pair Block - 90 Day		$238.92	$10.79	$249.71
DS0 Cable Placement per Termination - 90 Day		$4.48	$0.20	$4.69
DS0 Cable per 100 Pair Block - 90 Day		$307.32	$13.88	$321.21
DS0 Cable per Termination - 90 Day		$4.21	$0.19	$4.40
DS0 Blocks per 100 Pair Block - 90 Day		$532.34	$24.05	$556.38
DS0 Blocks per Termination - 90 Day		$7.29	$0.33	$7.62
DS0 Block Placement per 100 Pair Block - 90 Day		$247.79	$11.19	$258.99
DS0 Block Placement per Termination - 90 Day		$3.39	$0.15	$3.55
DS1 - 90 Day Installation				
DS1 Cable Placement per 28 DS1s - 90 Day		$397.37	$17.95	$415.32
DS1 Cable Placement per Termination - 90 Day		$42.73	$1.93	$44.66
DS1 Cable per 28 DS1s - 90 Day		$354.80	$16.03	$370.82
DS1 Cable per per Termination - 90 Day		$38.15	$1.72	$39.87
DS1 Panel per 28 DS1s - 90 Day		$402.19	$18.17	$420.35
DS1 Panel per Termination - 90 Day		$48.30	$2.18	$50.48
DS1 Panel Placement per 28 DS1s - 90 Day		$84.79	$3.83	$88.62
DS1 Panel Placement per Termination - 90 Day		$9.12	$0.41	$9.53
DS3 - 90 Day Installation				
DS3 Cable Placement per Termination - 90 Day		$161.79	$7.31	$169.09
DS3 Cable per Termination - 90 Day		$229.11	$10.35	$239.46
DS3 Connector per Termination - 90 Day		$234.60	$10.60	$245.19
DS3 Connector Placement per Termination - 90 Day		$24.35	$1.10	$25.45
1.1.3 Terminations - Monthly Charge				
DS0 - Monthly Charge				
DS0 Cable Placement per 100 pair per month		$0.3521	$0.0159	$0.3680
DS0 Cable Placement per Termination per month		$0.0066	$0.0003	$0.0069
DS0 Cable per 100 pair per month		$0.4529	$0.0205	$0.4733
DS0 Cable per Termination per month		$0.0062	$0.0003	$0.0065
DS0 Blocks per 100 pair per month		$0.7845	$0.0354	$0.8199
DS0 Blocks per Termination per month		$0.0107	$0.0005	$0.0112
DS0 Block Placement per 100 pair per month		$0.3652	$0.0165	$0.3816
DS0 Block Placement per Termination per month		$0.0050	$0.0002	$0.0052
DS1 - Monthly Charge				
DS1 Cable Placement per 28 DS1s per month		$0.9816	$0.0443	$1.0259
DS1 Cable Placement per Termination per month		$0.1055	$0.0048	$0.1103
DS1 Cable per 28 DS1s per month		$0.8764	$0.0396	$0.9160
DS1 Cable per per Termination per month		$0.0942	$0.0043	$0.0985
DS1 Panel per 28 DS1s per month		$0.9935	$0.0449	$1.0384
DS1 Panel per Termination per month		$0.1193	$0.0054	$0.1247
DS1 Panel Placement per 28 DS1s per month		$0.2095	$0.0095	$0.2189
DS1 Panel Placement per Termination per month		$0.0225	$0.0010	$0.0235
DS3 - Monthly Charge				
DS3 Cable Placement per Termination per month		$0.3996	$0.0181	$0.4177
DS3 Cable per Termination per month		$0.5660	$0.0256	$0.5915
DS3 Connector per Termination per month		$0.5795	$0.0262	$0.6057
DS3 Connector Placement per Termination per month		$0.0602	$0.0027	$0.0629
1.2 Entrance Facility				
1.2.1 Entrance Facility - 90 Day Installation				
Standard Shared Per Fiber		$607.27	$27.43	$634.70
Cross Connect per Fiber		$712.25	$32.17	$744.42
Express per Cable		$8,873.12	$400.79	$9,273.91
1.2.2 Entrance Facility - Monthly Charge				
Standard Shared Per Fiber per month	$382.43	$6.11	$0.28	$6.38
Cross Connect per Fiber per month	$382.43	$6.36	$0.29	$6.65
Express per Cable per month	$6,695.05	$96.05	$4.34	$100.38

South Dakota
Interconnection Services
Collocation

Cost Element	Investment sB r1	TELRIC sB r28	Common sB r38	TELRIC + Common
1.3 Cable Splicing - 90 Day Installation				
Setup		$466.09	$21.05	$487.14
Per fiber Spliced		$35.27	$1.59	$36.86
1.4 Power Usage				
1.4.1 Power Plant per Amp Ordered				
Power Plant per Amp Ordered Less than 60 AMPS	$556.92	$12.5637	$0.5675	$13.1312
Power Plant per Amp Ordered Equal to or Greater than 60 Amps	$368.43	$8.3114	$0.3754	$8.6869
Power Usage-Less than 60 AMPS per Amp Ordered		$2.07	$0.09	$2.16
Power Usage-More than 60 AMPS per Amp Ordered		$4.14	$0.19	$4.32
1.4.2 Backup AC Power Feed Usage - Monthly Charges				
120 V per Amp per Month	$316.89	$17.97	$0.81	$18.78
208 V, Single Phase per Amp per Month	$549.27	$31.15	$1.41	$32.55
208 V, Three Phase per Amp per Month	$950.24	$53.88	$2.43	$56.31
240 V, Single Phase per Amp per Month	$633.78	$35.94	$1.62	$37.56
240 V, Three Phase per Amp per Month	$1,096.43	$62.17	$2.81	$64.98
480 V, Three Phase per Amp per Month	$2,192.87	$124.34	$5.62	$129.96
1.4.3 Backup AC Power Cable - 90 Day Installation				
20 Amp, Single Phase - Initial Charge per Foot		$7.42	$0.34	$7.75
20 Amp, Three Phase - Initial Charge per Foot		$9.20	$0.42	$9.61
30 Amp, Single Phase - Initial Charge per Foot		$8.00	$0.36	$8.36
30 Amp, Three Phase - Initial Charge per Foot		$10.98	$0.50	$11.48
40 Amp, Single Phase - Initial Charge per Foot		$9.41	$0.42	$9.83
40 Amp, Three Phase - Initial Charge per Foot		$12.94	$0.58	$13.53
50 Amp, Single Phase - Initial Charge per Foot		$11.16	$0.50	$11.66
50 Amp, Three Phase - Initial Charge per Foot		$15.58	$0.70	$16.28
60 Amp, Single Phase - Initial Charge per Foot		$12.62	$0.57	$13.19
60 Amp, Three Phase - Initial Charge per Foot		$17.93	$0.81	$18.74
100 Amp, Single Phase - Initial Charge per Foot		$15.62	$0.71	$16.33
100 Amp, Three Phase - Initial Charge per Foot		$24.39	$1.10	$25.49
1.4.4 Backup AC Power Cable - Monthly Charges				
20 Amp, Single Phase per Foot per Month		$0.0183	$0.0008	$0.0191
20 Amp, Three Phase per Foot per Month		$0.0227	$0.0010	$0.0237
30 Amp, Single Phase per Foot per Month		$0.0198	$0.0009	$0.0207
30 Amp, Three Phase per Foot per Month		$0.0271	$0.0012	$0.0284
40 Amp, Single Phase per Foot per Month		$0.0232	$0.0010	$0.0243
40 Amp, Three Phase per Foot per Month		$0.0320	$0.0014	$0.0334
50 Amp, Single Phase per Foot per Month		$0.0276	$0.0012	$0.0288
50 Amp, Three Phase per Foot per Month		$0.0385	$0.0017	$0.0402
60 Amp, Single Phase per Foot per Month		$0.0312	$0.0014	$0.0326
60 Amp, Three Phase per Foot per Month		$0.0443	$0.0020	$0.0463
100 Amp, Single Phase per Foot per Month		$0.0386	$0.0017	$0.0403
100 Amp, Three Phase per Foot per Month		$0.0603	$0.0027	$0.0630
1.5 Security				
Access Card per Employee	$9.57	$0.78	$0.04	$0.81
Card Access Per Person per Office per Month	$250.00	$6.39	$0.29	$6.68
1.6 Central office Clock Synchronization				
C O Clock Synchronization per Port	$320.39	$7.23	$0.33	$7.55
1.7 Interconnection Tie Pair				
DS0 Per Connection	$20.99	$0.45	$0.02	$0.47
DS1 Per Connection	$68.55	$1.55	$0.07	$1.62
DS3 Per Connection	$691.39	$15.60	$0.70	$16.30
Space Construction - General				
2 Cageless Collocation				
2.1 Space Construction				
2.1.1 Space Construction - 45 Day Installation				
2.1.2 Space Construction - 90 Day Installation				
Space Construction for 2 Bays and 1 - 40A Power Feed - 90 Day		$26,226.88	$1,184.65	$27,411.53
Space Construction Adjustment for 20A Initial Power Feed - 90 Day		-$1,798.54	-$81.24	-$1,879.77

South Dakota
Interconnection Services
Collocation

Cost Element	Investment	TELRIC	Common	TELRIC + Common
	sB r1	sB r28	sB r38	
Space Construction Adjustment for 30A Initial Power Feed - 90 Day		-$1,141.15	-$51.54	-$1,192.70
Space Construction Adjustment for 60A Initial Power Feed - 90 Day		$2,004.85	$90.56	$2,095.41
Space Construction Adjustment for Each Additional Bay - 90 Day		$2,375.16	$107.28	$2,482.44
Space Construction Adjustment for Each Additional 20A Power Feed - 90 Day		$4,678.04	$211.30	$4,889.34
Space Construction Adjustment for Each Additional 30A Power Feed - 90 Day		$5,335.42	$241.00	$5,576.42
Space Construction Adjustment for Each Additional 40A Power Feed - 90 Day		$6,476.58	$292.54	$6,769.12
Space Construction Adjustment for Each Additional 60A Power Feed - 90 Day		$8,481.43	$383.10	$8,864.53
2.1.3 Space Monthly Charge				
Space Monthly Charge for 2 Bays and 1 - 40A Power Feed per Month		$64.79	$2.93	$67.71
Space Monthly Charge Adjustment for 20A Initial Power Feed per Month		-$4.44	-$0.20	-$4.64
Space Monthly Charge Adjustment for 30A Initial Power Feed per Month		-$2.82	-$0.13	-$2.95
Space Monthly Charge Adjustment for 60A Initial Power Feed per Month		$4.95	$0.22	$5.18
Space Monthly Charge Adjustment for Each Additional Bay per Month		$5.87	$0.27	$6.13
Space Monthly Charge Adjustment for Each Additional 20A Power Feed per Month		$11.56	$0.52	$12.08
Space Monthly Charge Adjustment for Each Additional 30A Power Feed per Month		$13.18	$0.60	$13.77
Space Monthly Charge Adjustment for Each Additional 40A Power Feed per Month		$16.00	$0.72	$16.72
Space Monthly Charge Adjustment for Each Additional 60A Power Feed per Month		$20.95	$0.95	$21.90
2.2 Rent				
Rent per Square Foot	$170.44	$2.9172	$0.1318	$3.0490
2.3 Quote Preparation Fee - Cageless Construction				
Quotation Preparation Fee		$4,071.21	$183.89	$4,255.11
3 Caged Collocation				
3.1 Space Construction				
3.1.1 Space Construction - 90 Day Installation				
Cage-Up to 100 Sq Ft - 90 Day		$47,109.24	$2,127.89	$49,237.13
Cage-101 Sq Ft to 200 Sq Ft - 90 Day		$48,920.24	$2,209.69	$51,129.93
Cage-201 Sq Ft to 300 Sq Ft - 90 Day		$50,328.51	$2,273.30	$52,601.81
Cage-301 Sq Ft to 400 Sq Ft - 90 Day		$52,093.33	$2,353.02	$54,446.35
Space Construction - Fencing Credit				
Cage-Up to 100 Sq Ft - Fencing Credit		-$5,091.83	-$229.99	-$5,321.82
Cage-101 Sq Ft to 200 Sq Ft - Fencing Credit		-$6,348.75	-$286.77	-$6,635.52
Cage-201 Sq Ft to 300 Sq Ft - Fencing Credit		-$7,131.12	-$322.11	-$7,453.23
Cage-301 Sq Ft to 400 Sq Ft - Fencing Credit		-$7,875.02	-$355.71	-$8,230.72
3.1.2 Initial Power Feed Adjustments - 90 Day				
Space Construction Adjustment for 20A Initial Power Feed - 90 Day		-$7,136.11	-$322.33	-$7,458.44
Space Construction Adjustment for 30A Initial Power Feed - 90 Day		-$6,521.04	-$294.55	-$6,815.59
Space Construction Adjustment for 40A Initial Power Feed - 90 Day		-$5,225.02	-$236.01	-$5,461.04
Space Construction Adjustment for 100A Initial Power Feed - 90 Day		$8,702.43	$393.08	$9,095.51
Space Construction Adjustment for 200A Initial Power Feed - 90 Day		$28,097.94	$1,269.16	$29,367.10
Space Construction Adjustment for 300A Initial Power Feed - 90 Day		$54,253.26	$2,450.58	$56,703.84
Space Construction Adjustment for 400A Initial Power Feed - 90 Day		$83,084.50	$3,752.87	$86,837.37
3.1.3 Each Additional Power Feed Adjustments - 90 Day				
Space Construction Adjustment for Each Additional 20A Power Feed - 90 Day		$5,858.47	$264.62	$6,123.09
Space Construction Adjustment for Each Additional 30A Power Feed - 90 Day		$6,473.54	$292.41	$6,765.95
Space Construction Adjustment for Each Additional 40A Power Feed - 90 Day		$7,769.56	$350.95	$8,120.50
Space Construction Adjustment for Each Additional 60A Power Feed - 90 Day		$12,994.58	$586.96	$13,581.54
Space Construction Adjustment for Each Additional 100A Power Feed - 90 Day		$21,697.01	$980.04	$22,677.05
Space Construction Adjustment for Each Additional 200A Power Feed - 90 Day		$41,092.52	$1,856.12	$42,948.64
Space Construction Adjustment for Each Additional 300A Power Feed - 90 Day		$67,247.85	$3,037.54	$70,285.38
Space Construction Adjustment for Each Additional 400A Power Feed - 90 Day		$96,079.09	$4,339.82	$100,418.91
3.1.4 Space Monthly Charge				
Cage-Up to 100 Sq Ft Monthly Charge		$116.37	$5.26	$121.63
Cage-101 Sq Ft to 200 Sq Ft Monthly Charge		$120.84	$5.46	$126.30
Cage-201 Sq Ft to 300 Sq Ft Monthly Charge		$124.32	$5.62	$129.94
Cage-301 Sq Ft to 400 Sq Ft Monthly Charge		$128.68	$5.81	$134.49
Space Monthly Charge - Fencing Credit				
Cage-Up to 100 Sq Ft Monthly Charge - Fencing Credit		-$12.58	-$0.57	-$13.15
Cage-101 Sq Ft to 200 Sq Ft Monthly Charge - Fencing Credit		-$15.68	-$0.71	-$16.39
Cage-201 Sq Ft to 300 Sq Ft Monthly Charge - Fencing Credit		-$17.62	-$0.80	-$18.41
Cage-301 Sq Ft to 400 Sq Ft Monthly Charge - Fencing Credit		-$19.45	-$0.88	-$20.33
3.1.5 Initial Power Feed Monthly Charge Adjustments				

South Dakota
Interconnection Services
Collocation

Cost Element	Investment	TELRIC	Common	TELRIC + Common
	sB r1	sB r28	sB r38	
Space Monthly Charge Adjustment for 20A Initial Power Feed		-$17.63	-$0.80	-$18.42
Space Monthly Charge Adjustment for 30A Initial Power Feed		-$16.11	-$0.73	-$16.84
Space Monthly Charge Adjustment for 40A Initial Power Feed		-$12.91	-$0.58	-$13.49
Space Monthly Charge Adjustment for 100A Initial Power Feed		$21.50	$0.97	$22.47
Space Monthly Charge Adjustment for 200A Initial Power Feed		$69.41	$3.14	$72.54
Space Monthly Charge Adjustment for 300A Initial Power Feed		$134.02	$6.05	$140.07
Space Monthly Charge Adjustment for 400A Initial Power Feed		$205.24	$9.27	$214.51
3.1.6 Each Additional Power Feed Monthly Charge Adjustments				
Space Monthly Charge Adjustment for Each Additional 20A Power Feed		$14.47	$0.65	$15.13
Space Monthly Charge Adjustment for Each Additional 30A Power Feed		$15.99	$0.72	$16.71
Space Monthly Charge Adjustment for Each Additional 40A Power Feed		$19.19	$0.87	$20.06
Space Monthly Charge Adjustment for Each Additional 60A Power Feed		$32.10	$1.45	$33.55
Space Monthly Charge Adjustment for Each Additional 100A Power Feed		$53.60	$2.42	$56.02
Space Monthly Charge Adjustment for Each Additional 200A Power Feed		$101.51	$4.59	$106.09
Space Monthly Charge Adjustment for Each Additional 300A Power Feed		$166.12	$7.50	$173.62
Space Monthly Charge Adjustment for Each Additional 400A Power Feed		$237.34	$10.72	$248.06
3.2 Grounding				
Grounding - 90 Day Installation				
#2 AWG per Foot - 90 Day		$10.33	$0.47	$10.80
1/0 AWG per Foot - 90 Day		$17.68	$0.80	$18.48
4/0 AWG per Foot - 90 Day		$20.37	$0.92	$21.29
350 KCMIL per Foot - 90 Day		$27.44	$1.24	$28.68
500 KCMIL per Foot - 90 Day		$31.07	$1.40	$32.47
750 KCMIL per Foot - 90 Day		$53.72	$2.43	$56.14
Grounding - Monthly Charge				
#2 AWG per Foot Monthly Charge		$0.0255	$0.0012	$0.0267
1/0 AWG per Foot Monthly Charge		$0.0437	$0.0020	$0.0457
4/0 AWG per Foot Monthly Charge		$0.0503	$0.0023	$0.0526
350 KCMIL per Foot Monthly Charge		$0.0678	$0.0031	$0.0709
500 KCMIL per Foot Monthly Charge		$0.0768	$0.0035	$0.0802
750 KCMIL per Foot Monthly Charge		$0.1327	$0.0060	$0.1387
3.3 Rent				
Rent per Square Foot	$170.44	$2.92	$0.13	$3.05
3.4 Quote Preparation Fee - Caged Construction				
Quotation Preparation Fee - Caged Construction		$4,426.59	$199.95	$4,626.54
4 Virtual Collocation				
4.1 Equipment Bay				
Equipment Bay per Shelf	$164.77	$3.72	$0.17	$3.89
4.2 Labor				
Maintenance - Regular Business Hours Per 1/2 Hour		$26.00	$1.17	$27.17
Maintenance - Outside Regular Business Hours Per 1/2 Hour		$34.79	$1.57	$36.36
Training - Regular Business Hours Per 1/2 Hour		$26.00	$1.17	$27.17
Inspector - Regular Business Hours Per 1/2 Hour		$29.64	$1.34	$30.98
Inspector - Outside Regular Business Hours Per 1/2 Hour		$38.17	$1.72	$39.89
Installation - Regular Business Hours Per 1/2 Hour		$29.64	$1.34	$30.98
Installation - Outside Regular Business Hours Per 1/2 Hour		$38.17	$1.72	$39.89
Engineering - Regular Business Hours Per 1/2 Hour		$28.05	$1.27	$29.32
Engineering - Outside Regular Business Hours Per 1/2 Hour		$36.21	$1.64	$37.84
4.3 Quote Preparation Fee - Virtual				
Quotation Preparation Fee - Virtual		$4,071.21	$183.89	$4,255.11

Cell: A2
Comment: This spreadsheet is a summary of the costs calculated in Section B.

Cell: A9
Comment: 1.1 Terminations

Nonrecurring One Time Charge

Terminations are the network connections between the CLEC equipment and the Qwest network. These connections can be at a DS0, DS1 or DS3 level. The CLEC requires these elements to connect their equipment to the unbundled elements they are purchasing from Qwest. For example, an unbundled loop purchased by a CLEC will terminate on Qwest's network. The CLEC needs to have facilities to connect this unbundled loop to the equipment in their collocation space. Terminations are the cables and blocks that are used to make this connection. The termination costs are broken into four components:

1. The cables which are used to make the connection;
2. The blocks and panels needed to terminate the cables on the Qwest network;
3. The cost of placing the cable in the cable racks; and
4. The cost of placing the panels and blocks on the intermediate distribution frame.

Each of these components is broken out separately to allow the CLEC the opportunity to self-provision portions of these connections. If a CLEC prefers to supply its own cable or blocks, the rate for cable or blocks would not be assessed. However, the placement rates would still apply if Qwest places the blocks and the cable. Terminations end at a CLEC's equipment and are therefore dedicated to providing that CLEC service. All these costs are incurred solely for the collocator and will be recovered through a one-time charge based on the number of terminations, which are ordered. Terminations can be ordered on an individual basis or in quantities of 100 pairs for DS0's and 28 pairs for DS1's. The cost for bundles of cables represents the economies of 100 percent utilization of the placed facilities.

The nonrecurring cost does not include the cost of a dedicated frame (SPOT Frame), the cost of regenerating the signal to provide a higher grade of service, a direct connection to the COSMIC frame or other special configurations that may be requested by the carrier. Carriers requesting unique configurations for terminating their services to their collocation space will be charged on a case by case basis based on the actual cost of building the unique configuration.

Recurring Monthly Charge

There is also a small monthly recurring charge for maintaining these connections.

Cell: A10
Comment: 45-day installation is available only as required under contract provisions or in states where required by law.

Cell: A83
Comment: 1.2 Entrance Facility

Nonrecurring One Time Charge

Entrance facility is the connection between the CLEC cable outside the office and the CLEC facilities within the office. The costs include the manhole where the CLEC cable enters Qwest's facilities, the conduit between the manhole and the Central Office, the cable running from the manhole to the CLEC space and the structure, such as cable racking, used to support the cables. The placement costs for all the cable and equipment is also included. The cost is on a per fiber basis and must be ordered in quantities of 12 (the number of fibers in the standard cable). To place these cables the company has, in some instances, had to place new cable racking and new manholes to accommodate the CLEC's cable. The nonrecurring costs reflect the fact that a certain percentage of the time new facilities are required. These costs, when they are incurred, are spread over the number of CLEC's that are anticipated to use the facilities. The cable is also included in the nonrecurring charge since it is dedicated solely to the use of the requesting CLEC.

Recurring Monthly Charge

There is also a small recurring monthly charge for the cost using existing cable racking and other cable support facilities and the cost of maintaining all of the facilities used to provide this service to the CLEC.

Cell: A93
Comment: 1.3 Fiber Cable Splicing

The Fiber Cable Splicing elements represent the labor and equipment to perform a splice.

-The "Per Setup" element includes the labor required for an outside plant technician to perform all necessary tasks prior to the actual splicing and to install the splice case.

-The "Per Splice" element covers the labor to splice and test each fiber to each side of the splice case.

Cell: A97
Comment: 1.4 Power Usage

Recurring Monthly Charge

There are recurring monthly charges for power usage. Power usage includes the cost of purchasing power from the electric company and the cost of the power plant. Power usage is broken down into three rates:

1. A rate for the use of the power plant that is charged based on the size of the power feed of feeds that the CLEC orders;
2. A flat monthly power usage rate for each type of power feed that is smaller than 100 AMPs; and
3. A per AMP rate for power usage that is delivered on power feeds that are larger than 60 AMPs.

The power plant consists of the backup power generator, rectifiers, power boards, battery distribution frame boards (BDFB's), batteries and the cable and support structure that connects all these components. The power plant generates and stores power for use during potential outages converts standard AC power to the DC power used by telecommunications equipment and distributes the power to those areas of the central office where the power is to be used. The monthly charge reflects the capital and maintenance costs associated with maintaining this system. The monthly charge is based on the size of the power feed requested by the CLEC.

The usage charge for power consists of the cost of purchasing AC power from an external company. This charge will vary by actual amount of power used by a CLEC during a given period. Unfortunately for power feeds of less than 100 AMPs Qwest does not have the equipment at the BDFB to measure actual power usage. The cost of placing such measurement equipment would far exceed any benefits that could be obtained and would need to be recovered through an additional charge to the CLECs. For this reason, Qwest adopted an assumption that power usage on CLEC power feeds of less than 100 AMPs should be assumed to be 50 % of the actual capacity of the feed. For power cable of 100 AMPs or more the measurement capabilities currently exists so the charge for power will be based on actual usage.

Cell: A98
Comment: Power equipment less than 60 amps includes BDFB. Power Equipment greater than or equal to 60 amps excludes BDFB.

Cell: A137
Comment: 1.5 Security
Provides for the security systems (e.g., card readers, identification cards, etc.) at Qwest wire centers so carriers can have access to their collocation space.

Cell: A141
Comment: 1.6 Composite Clock/CO Synchronization
This element provides Composite Clock and/or DS1 Synchronization signals traceable to a Stratum 1 source. The interconnector must determine the IDE synchronization requirements and notify Qwest of these requirements when ordering the clock signals. The Composite Clock signal is a 64 kHz, nominal 5/8 duty cycle, bipolar return-to-zero signal with a bipolar violation every eighth pulse. The DS1 Clock signal is a framed, all-ones, 1.544 Mb/s (DS1) signal using the superframe frame format and the Alternate Mark Inversion line code. CO Synchronization is required for VEIC Service involving digital services or connections. Synchronization may be required for analog services, depending on the IDE involved. CO Synchronization is available where Qwest wire centers are equipped with Building Integrated Timing Supply (BITS).

Cell: A144
Comment: 1.7 Interconnection Tie Pairs (ITP)
Recurring Monthly Charge
Interconnection Tie Pairs are the connection between the shared frame, where the terminations are tied, and the COSMIC frame. The cost of the ITP includes blocks on the shared frame, the shared frame, connections to the COSMIC frame and the cable and cable racking running between the shared frame and the COSMIC frame. The cost of placing all these facilities is also included in the overall costs. ITP's are part of the existing integrated Qwest network. Since these facilities will in most instances already exist and can be shared amongst various CLEC's and Qwest, the costs will be recovered through a monthly recurring charge based on the number of connections being used by any one CLEC during the period.

Cell: A149
Comment: Space Construction - General
Nonrecurring One Time Charge
At the request of CLECs, Qwest is offering a standard price for space construction. There are separate prices for standard caged and cageless collocation configurations. The standard costs for both cageless and caged collocation includes:

1. The costs for a single power feed;
2. The cost of new overhead structure to support cable racking and CLEC collocated equipment;
3. The cost of new cable racking required to carry the CLEC's power cable and terminations to the existing cable racking network;
4. The average cost of any new lighting that may be required to illuminate the CLEC's space;
5. The cost of engineering the collocation job; and
6. Additions to the cooling system (i.e. HVAC) and electromechanical system to extend the network to get incidental power and cooling to the CLECs collocation area.

The above costs although not identical for each type of collocation, are common to both caged and cageless collocation. The cost for common structure, such as cable racking, lighting and Arial support structure, is prorated between anticipated number of carriers that will be sharing the use of the structure. Facilities that are dedicated for the sole use of an individual CLEC, such as power cable, are assigned directly to that CLEC's job. The standard costs reflect the most opted for configurations. Adjustment factor s for costs for requested variations to the standard configurations are also identified for those companies seeking a different space design.

The engineering component of the standard configuration for both caged and cageless collocation includes all preliminary engineering costs that were incurred as a result of preparing the original quote. In some contracts there is a separate charge for this preliminary engineering that is assessed to the CLEC at the time that the quote is initiated. To the extent that the CLEC has paid a quote preparation fee that is nonrefundable and therefore retained by Qwest, the amount of that fee that is retained should be deducted from the standard space construction charge in determining the additional amount that that CLEC still owes to the company.

Cell: A151
Comment: 2.1 Space Construction-Cageless collocation
Standard Space Construction Charge
In addition to the facilities listed under Space Construction - General, the standard cageless collocation space construction charge includes the ground cable for the CLEC's equipment. It also includes one standard 40 AMP power feed and a space adequate to insert two standard bays. The standard cost does not include the cost of the actual bays in which the CLEC places its equipment. These bays are self-provisioned by the CLEC. The standard space construction charge for cageless collocation varies between states based on whether they are located in an earthquake prone zone. Additional structural support is required in stated with a high risk of damage from earthquakes (i.e. Washington, Oregon, Utah, Arizona, Idaho, Wyoming and Montana). Two standard rates are calculated for cageless collocation to reflect these differences.

Some contracts contain provisions for constructing cageless collocation spaces within a 45-day time frame. This time frame is significantly less than the standard 90-day timeframe generally offered by the company. A forty-five day time frame eliminates many of the options the company has to reasonably forecast and plan for the additional workload. This results in an increase in the cost of the cost of constructing the facilities. To reflect this difference in cost in meeting these expedited timeframes a separate cageless collocation cost has been developed for these 45-day jobs. The CLEC also has the option of requesting a standard 90 day construction interval at a lower standard cost.

Cell: A152
Comment: 45-day installation is available only as reuired under contract provisions or in states where required by law.

Cell: A164
Comment: Power Feed-Variations to the Standard 40 AMP Feed Design
The standard cageless collocation rate includes the provisioning of one 40 AMP power feed. A CLEC can request a power feed to their cageless collocation space at 20, 30, 40 or 60 AMPS. USWEST has calculated cost based adjustments to the standard design price to facilitate pricing for power feed orders that vary from the standard 40 AMP design. For CLECs that order a 20 or 30 AMP cable the standard price is reduced to reflect the lower cost of these power feeds. The ordering of a 60 AMP cable would increase the standard space construction charge. These cost based adjustments to the standard design are included in the price list.

Cell: A167
Comment: Additional Bays
A CLEC also has the option of requesting space for additional bays. A cost for additional bays is included in the price list. This cost is based on a proration of the portion of the support structure; cable racking, lighting and grounding facilities needed to support the collocation area.

Cell: A168
Comment: Power Feed-Additional
Nonrecurring One Time Charge
This charge is for the DC power cable feeds from the CLEC equipment to the Battery Distribution Frame Board (i.e. BDFB) or Power Board, where the cable terminates. The power cable element included costs for the cables and the lugs, fuses and Htaps required to connect the cables to the power network. All costs of installing the cables are also included in the costs. These cables are attached directly to the CLEC's equipment and are dedicated exclusively for the use of the CLEC. One feed element consists of an A and B or original and backup feed. Each feed consists of two cables, four for the combined A & B feed. Power feeds can be purchased in the following sizes for the various types of collocation:

Size of Power Feed Type of Collocation

20 AMP Available for all types of Collocation
30 AMP Available for all types of Collocation
40 AMP Available for all types of Collocation
60 AMP Available for all types of Collocation
100 AMP Available for cage collocation only
200 AMP Available for cage collocation only
300 AMP Available for cage collocation only
400 AMP Available for cage collocation only

The costs for power feeds varies between the types of collocation (i. e. caged and cageless) due to the differences in the average distance between the CLEC space and the BDFB or power board. Power cables of 100 AMPs or greater are only available with caged collocation.

It should be noted that the initial power feed to a CLEC space is included in the initial space construction charge. The flat cageless collocation charge includes the cost of one 40 AMP cable. The flat Caged collocation costs includes the cost of one 60 AMP cable. There are also adjustments to the standard flat collocation space construction charge for CLECs that desire a power feed that varies from the standards identified above. The separate power feed charges only apply to the second and subsequent power feeds to the CLEC collocation space.
Recurring Monthly Charge
There is also a small recurring charge for the maintenance of the power feeds.

Cell: A183
Comment: 1.7.9 Space Rent

The monthly rent for the leased physical space, without -48 Volt DC Power. The base rent rate element includes one 110 AC, 15 AMP electrical outlet provided in accordance with local codes and may not be used to power transmission equipment or -48 Volt D

Cell: A187
Comment: 1.7.1 Quotation Preparation Fee
The non-recurring cost for preparing a price quotation to a collocator for collocation

Cell: A190
Comment: Space Construction-Caged collocation
3.1 Standard Space Construction Charge
In addition to the facilities listed under Space Construction - General, the standard cageless collocation space construction charge includes the cost of constructing the cage. Cages are offered in standard 100, 200, 300 and 400 square feet increments. Nonstandard cage designs will be charged at the next highest increment. The standard caged collocation rate also includes the provisioning of one standard 60 AMP power feed. In caged collocation the grounding cable is offered as a separate element so the cost of the ground cable is not included in the standard price. As discussed below, a CLEC has the option of ordering large power feeds for their caged collocation area. The larger power feeds the greater the size of the facilities required to ground the equipment. To accommodate these variances in the size of the ground wire that is required, a separate grounding element has been developed for caged collocation builds.

Cell: A201
Comment: Power Feed-Variations to the Standard 60 AMP Feed Design
The standard caged collocation rate includes the provisioning of one 60 AMP power feed. A CLEC can request a power feed to their caged collocation space at 20, 30, 40, 60, 100, 200, 300 and 400 AMPS. USWEST has calculated cost based adjustments to the standard design price to facilitate pricing for power feed orders that vary from the standard 60 AMP design. For CLECs that order a 20, 30 or 40 AMP power feeds the standard price is reduced to reflect the lower cost of these power feeds. The ordering of 100, 200, 300, and 400 AMP power feeds would increase the standard space construction charge. These cost based adjustments to the standard design are included in the price list.

Cell: A246
Comment: 3.2 Grounding
Extends the building DC ground from the grounding plane of the central office to the CLEC's space.

Cell: A269
Comment: 4.1 Equipment Bay/Shelf
The Equipment Bay provides mounting space for the interconnector-designated shelves and fuse panel. Each Bay includes the 7 foot bay, its installation and all necessary environmental supports (e.g., floor space, heat and lighting). Mounting space on the bay, including space for the fuse panel and air gaps necessary for heat dissipation, is limited to 78 inches. Physical dimensions of the equipment bay are 84 inches high by 26 inches wide by 12 inches deep. Each bay is capable of providing space for six shelves. This element is for space for one shelf on the equipment bay.

Cell: A272
Comment: 4.2 Labor
- Equipment (Installation, Change, or Removal) - Labor - Equipment Labor is a charge associated with the installation, change or removal (i.e., discontinuance) of equipment. The Equipment Labor is a nonrecurring element based on the one half hour (1/2) during normal business hours or one half hour (1/2) outside normal business hours, as applicable.

- Equipment Maintenance - Labor - The Equipment Maintenance Labor rate element provides for the labor necessary to repair out-of-service and/or service-affecting conditions and preventative maintenance of the equipment as specified by the interconnector. The interconnector is responsible for ordering maintenance spares. Qwest will perform maintenance and/or repair work upon receipt of the replacement maintenance spare and/or equipment from the applicable interconnector. The equipment maintenance labor charge is a nonrecurring charge assessed per one half hour (1/2) or fraction thereof, per technician, during normal business hours or per one half hour (1/2) or fraction thereof, per technician, outside normal business hours, as applicable. A call-out of a maintenance technician outside normal business hours is subject to a minimum charge of four (4) hours. If the technician is required beyond the four hour minimum, the remaining time will be billed at the half-hour increment charge.

- Training -The Training element provides for the billing of vendor-provided training for Qwest personnel, on a metropolitan service area basis, necessary for interconnector-designated equipment (IDE) which is different from the Qwest-provided equipment. Qwest will require that three people be trained per metropolitan service area affected by the particular IDE. Within five business days of receiving the interconnector's request for service, Qwest will inform the interconnector of the number of employees requiring training. If, by an act of Qwest, the employees that have been trained are relocated, retired or are no longer available, Qwest will not require an interconnector to provide training for any new employees for the same IDE.

The Training element will only apply as required and will be determined utilizing two elements: the first will be the actual number of hours that the employee(s) is in training and the second is the actual training charges direct billed to Qwest (a copy of the invoice for the training course will be provided to the interconnector with the bill). The number of hours that the employee(s) is in training will be multiplied by the Labor rate element. The direct-billed training expenses will be billed to the interconnector in one half hour increments. The total direct-billed training expenses will be divided by the training element. The result of the division will be rounded to the nearest one-half hour increment.

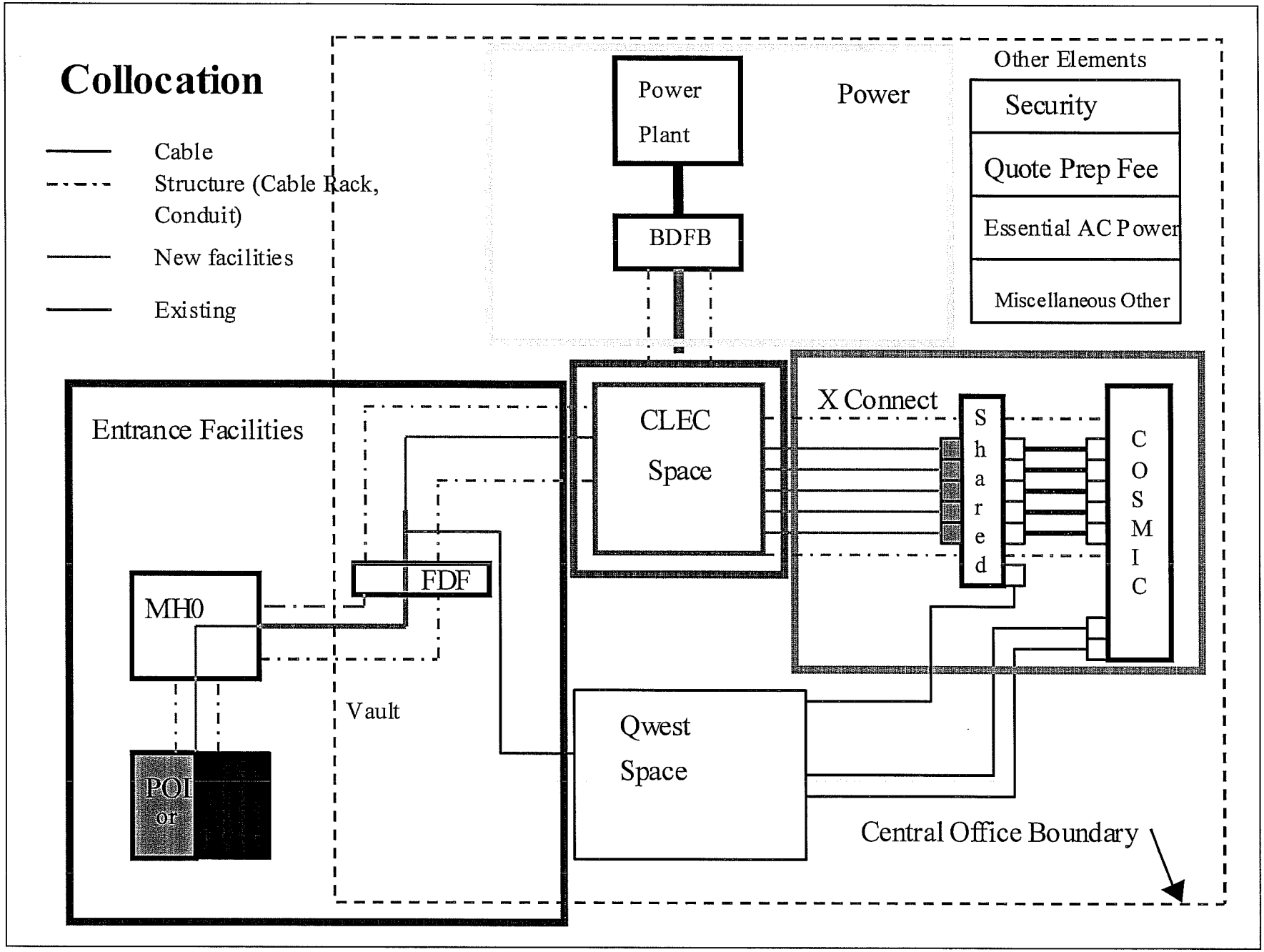
Collocation
Cable
Structure (Cable Rack, Conduit)
New facilities
Existing
Power Plant
BDFB
Power
Other Elements
Security
Quote Prep Fee
Essential AC Power
Miscellaneous Other
Entrance Facilities
CLEC Space
X Connect
Shared
COSMIC
FDF
MH0
Vault
POI or
Qwest Space
Central Office Boundary

B. 1.1 Dev Total Prod Costs - Standard Collocation Terminations

	Version 1.0 Created 7/12/01, 4:35:46 PM			1.1.2 Terminations - 90 Day Installation							
				DS0 - 90 Day Installation							
Row	South Dakota	Source or Calculation	Factor Value (sF)	DS0 Cable Placement per 100 Pair Block - 90 Day	DS0 Cable Placement per Termination - 90 Day	DS0 Cable per 100 Pair Block - 90 Day	DS0 Cable per Termination - 90 Day	DS0 Blocks per 100 Pair Block - 90 Day	DS0 Blocks per Termination - 90 Day	DS0 Block Placement per 100 Pair Block - 90 Day	DS0 Block Placement per Terminatio n - 90 Day
			A								
1	**Investment**	**sC p1-3 cE**									
2											
3	***Total Investment Based Costs***	**sC p1-3 cK**									
4	***Element Specific Expenses***	**sE p1-2 cB-D**		186.2777	3.4955	239.6150	3.2824	415.0523	5.6856	193.2008	2.6466
5	***Total IBC + Element Specific Expenses***	***r3 + r4***		186.2777	3.4955	239.6150	3.2824	415.0523	5.6856	193.2008	2.6466
6											
7	***Directly Assigned***										
8	Product Management Expense	cA*r5	0.02557	4.7622	0.0894	6.1258	0.0839	10.6109	0.1454	4.9392	0.0677
9	Sales Expense	cA*r5	0.00922	1.7183	0.0322	2.2103	0.0303	3.8287	0.0524	1.7822	0.0244
10	Product Advertising Expense	cA*r5	0.00000	0.0000	0.0000	0.0000	0.0000	0.0000	0.0000	0.0000	0.0000
11	Business Fees (Other Operating Taxes)	cA*(r5+r8:r10)	0.00203	0.3904	0.0073	0.5021	0.0069	0.8698	0.0119	0.4049	0.0055
12	***Directly Assigned Costs***	***Sum r8:r11***		6.8709	0.1289	8.8383	0.1211	15.3094	0.2097	7.1263	0.0976
13											
14	***Total Direct***	***r5 + r12***		193.1486	3.6245	248.4533	3.4035	430.3617	5.8954	200.3271	2.7442
15											
16	***Directly Attributed***										
17	Network Operations	cA*r14	0.04088	7.8959	0.1482	10.1568	0.1391	17.5932	0.2410	8.1894	0.1122
18	Network Support Assets	cA*r14	0.01536	2.9675	0.0557	3.8172	0.0523	6.6121	0.0906	3.0778	0.0422
19	General Support Assets	cA*r14	0.06951	13.4253	0.2519	17.2694	0.2366	29.9134	0.4098	13.9243	0.1907
20	General Purpose Computers	cA*r14	0.03471	6.7049	0.1258	8.6248	0.1181	14.9395	0.2047	6.9541	0.0953
21	Uncollectible - Interconnect	cA*r14	0.00040	0.0774	0.0015	0.0996	0.0014	0.1725	0.0024	0.0803	0.0011
22	Accounting and Finance Expense	cA*r14	0.00884	1.7072	0.0320	2.1960	0.0301	3.8039	0.0521	1.7706	0.0243
23	Human Resources Expense	cA*r14	0.00814	1.5731	0.0295	2.0236	0.0277	3.5052	0.0480	1.6316	0.0224
24	Information Management Expense	cA*r14	0.05701	11.0113	0.2066	14.1642	0.1940	24.5347	0.3361	11.4205	0.1564
25	Intangibles	cA*r14	0.00209	0.4039	0.0076	0.5196	0.0071	0.9000	0.0123	0.4189	0.0057
26	***Total Directly Attributed Costs***	***Sum r17:r25***		45.7667	0.8588	58.8711	0.8065	101.9744	1.3969	47.4676	0.6502
27											
28	***Total Element Long Run Incremental C***	***r 14 + r26***		238.9153	4.4833	307.3245	4.2099	532.3361	7.2923	247.7946	3.3944
29											
30	***Common***										
31	Executive Expense	cA*r28	0.00780	1.8647	0.0350	2.3986	0.0329	4.1548	0.0569	1.9340	0.0265
32	Planning Expense	cA*r28	0.00058	0.1386	0.0026	0.1783	0.0024	0.3088	0.0042	0.1438	0.0020
33	External Relations Expense	cA*r28	0.01303	3.1128	0.0584	4.0041	0.0549	6.9358	0.0950	3.2285	0.0442
34	Legal Expense	cA*r28	0.00615	1.4689	0.0276	1.8895	0.0259	3.2730	0.0448	1.5235	0.0209
35	Other Procurement Expense	cA*r28	0.00236	0.5637	0.0106	0.7251	0.0099	1.2559	0.0172	0.5846	0.0080
36	Research and Development Expense	cA*r28	0.00004	0.0086	0.0002	0.0111	0.0002	0.0192	0.0003	0.0089	0.0001
37	Other General and Admin Exp	cA*r28	0.01521	3.6343	0.0682	4.6749	0.0640	8.0977	0.1109	3.7694	0.0516
38	***Total Common Costs***	***Sum r31:r37***		10.7916	0.2025	13.8816	0.1902	24.0452	0.3294	11.1927	0.1533
39											
40	***TELRIC + Common***	***r28 + r38***		**249.71**	**4.69**	**321.21**	**4.40**	**556.38**	**7.62**	**258.99**	**3.55**

c = column, r = row, s = section, p = page

B. 1.1 Dev Total Prod Costs - Standard Collocation Terminations

	Version 1.0 Created 7/12/01, 4:35:46 PM										
				DS1 - 90 Day Installation							
Row	South Dakota	Source or Calculation	Factor Value (sF)	DS1 Cable Placement per 28 DS1s - 90 Day	DS1 Cable Placement per Termination - 90 Day	DS1 Cable per 28 DS1s - 90 Day	DS1 Cable per per Termination - 90 Day	DS1 Panel per 28 DS1s - 90 Day	DS1 Panel per Termination - 90 Day	DS1 Panel Placement per 28 DS1s - 90 Day	DS1 Panel Placement per Termination - 90 Day
			A								
1	**Investment**	**sC p1-3 cE**									
2											
3	***Total Investment Based Costs***	**sC p1-3 cK**									
4	***Element Specific Expenses***	**sE p1-2 cB-D**		309.8225	33.3142	276.6284	29.7450	313.5775	37.6609	66.1095	7.1085
5	***Total IBC + Element Specific Expenses***	***r3 + r4***		309.8225	33.3142	276.6284	29.7450	313.5775	37.6609	66.1095	7.1085
6											
7	***Directly Assigned***										
8	Product Management Expense	cA*r5	0.02557	7.9207	0.8517	7.0721	0.7604	8.0167	0.9628	1.6901	0.1817
9	Sales Expense	cA*r5	0.00922	2.8580	0.3073	2.5518	0.2744	2.8926	0.3474	0.6098	0.0656
10	Product Advertising Expense	cA*r5	0.00000	0.0000	0.0000	0.0000	0.0000	0.0000	0.0000	0.0000	0.0000
11	Business Fees (Other Operating Taxes)	cA*(r5+r8:r10)	0.00203	0.6493	0.0698	0.5797	0.0623	0.6571	0.0789	0.1385	0.0149
12	***Directly Assigned Costs***	***Sum r8:r11***		11.4279	1.2288	10.2035	1.0972	11.5664	1.3891	2.4385	0.2622
13											
14	***Total Direct***	***r5 + r12***		321.2504	34.5431	286.8319	30.8421	325.1439	39.0500	68.5480	7.3708
15											
16	***Directly Attributed***										
17	Network Operations	cA*r14	0.04088	13.1327	1.4121	11.7257	1.2608	13.2919	1.5964	2.8022	0.3013
18	Network Support Assets	cA*r14	0.01536	4.9357	0.5307	4.4069	0.4739	4.9955	0.6000	1.0532	0.1132
19	General Support Assets	cA*r14	0.06951	22.3294	2.4010	19.9370	2.1438	22.6000	2.7143	4.7646	0.5123
20	General Purpose Computers	cA*r14	0.03471	11.1519	1.1991	9.9571	1.0707	11.2870	1.3556	2.3796	0.2559
21	Uncollectible - Interconnect	cA*r14	0.00040	0.1288	0.0138	0.1150	0.0124	0.1303	0.0157	0.0275	0.0030
22	Accounting and Finance Expense	cA*r14	0.00884	2.8395	0.3053	2.5352	0.2726	2.8739	0.3452	0.6059	0.0651
23	Human Resources Expense	cA*r14	0.00814	2.6165	0.2813	2.3362	0.2512	2.6482	0.3180	0.5583	0.0600
24	Information Management Expense	cA*r14	0.05701	18.3143	1.9693	16.3521	1.7583	18.5363	2.2262	3.9079	0.4202
25	Intangibles	cA*r14	0.00209	0.6718	0.0722	0.5998	0.0645	0.6799	0.0817	0.1433	0.0154
26	***Total Directly Attributed Costs***	***Sum r17:r25***		76.1204	8.1850	67.9650	7.3081	77.0430	9.2529	16.2425	1.7465
27											
28	***Total Element Long Run Incremental C***	***r 14 + r26***		397.3708	42.7280	354.7969	38.1502	402.1870	48.3029	84.7905	9.1173
29											
30	***Common***										
31	Executive Expense	cA*r28	0.00780	3.1014	0.3335	2.7692	0.2978	3.1390	0.3770	0.6618	0.0712
32	Planning Expense	cA*r28	0.00058	0.2305	0.0248	0.2058	0.0221	0.2333	0.0280	0.0492	0.0053
33	External Relations Expense	cA*r28	0.01303	5.1773	0.5567	4.6226	0.4971	5.2401	0.6293	1.1047	0.1188
34	Legal Expense	cA*r28	0.00615	2.4432	0.2627	2.1814	0.2346	2.4728	0.2970	0.5213	0.0561
35	Other Procurement Expense	cA*r28	0.00236	0.9375	0.1008	0.8371	0.0900	0.9489	0.1140	0.2000	0.0215
36	Research and Development Expense	cA*r28	0.00004	0.0143	0.0015	0.0128	0.0014	0.0145	0.0017	0.0031	0.0003
37	Other General and Admin Exp	cA*r28	0.01521	6.0447	0.6500	5.3970	0.5803	6.1179	0.7348	1.2898	0.1387
38	***Total Common Costs***	***Sum r31:r37***		17.9489	1.9300	16.0259	1.7232	18.1665	2.1818	3.8299	0.4118
39											
40	***TELRIC + Common***	***r28 + r38***		**415.32**	**44.66**	**370.82**	**39.87**	**420.35**	**50.48**	**88.62**	**9.53**

c = column, r = row, s = section, p = page

B. 1.1 Dev Total Prod Costs - Standard Collocation Terminations

	Version 1.0 Created 7/12/01, 4:35:46 PM						
				DS3 - 90 Day Installation			
Row	South Dakota	Source or Calculation	Factor Value (sF)	DS3 Cable Placement per Termination - 90 Day	DS3 Cable per Termination - 90 Day	DS3 Connector per Termination - 90 Day	DS3 Connector Placement per Termination - 90 Day
			A				
1	**Investment**	**sC p1-3 cE**					
2							
3	***Total Investment Based Costs***	**sC p1-3 cK**					
4	***Element Specific Expenses***	**sE p1-2 cB-D**		126.1415	178.6328	182.9110	18.9888
5	***Total IBC + Element Specific Expenses***	***r3 + r4***		126.1415	178.6328	182.9110	18.9888
6							
7	***Directly Assigned***						
8	Product Management Expense	cA*r5	0.02557	3.2248	4.5668	4.6762	0.4855
9	Sales Expense	cA*r5	0.00922	1.1636	1.6478	1.6873	0.1752
10	Product Advertising Expense	cA*r5	0.00000	0.0000	0.0000	0.0000	0.0000
11	Business Fees (Other Operating Taxes)	cA*(r5+r8:r10)	0.00203	0.2643	0.3743	0.3833	0.0398
12	***Directly Assigned Costs***	***Sum r8:r11***		4.6528	6.5889	6.7467	0.7004
13							
14	***Total Direct***	***r5 + r12***		130.7943	185.2217	189.6578	19.6892
15							
16	***Directly Attributed***						
17	Network Operations	cA*r14	0.04088	5.3469	7.5719	7.7532	0.8049
18	Network Support Assets	cA*r14	0.01536	2.0095	2.8457	2.9139	0.3025
19	General Support Assets	cA*r14	0.06951	9.0912	12.8743	13.1827	1.3685
20	General Purpose Computers	cA*r14	0.03471	4.5404	6.4298	6.5838	0.6835
21	Uncollectible - Interconnect	cA*r14	0.00040	0.0524	0.0742	0.0760	0.0079
22	Accounting and Finance Expense	cA*r14	0.00884	1.1561	1.6371	1.6763	0.1740
23	Human Resources Expense	cA*r14	0.00814	1.0653	1.5086	1.5447	0.1604
24	Information Management Expense	cA*r14	0.05701	7.4565	10.5594	10.8123	1.1225
25	Intangibles	cA*r14	0.00209	0.2735	0.3873	0.3966	0.0412
26	***Total Directly Attributed Costs***	***Sum r17:r25***		30.9918	43.8884	44.9395	4.6654
27							
28	***Total Element Long Run Incremental C***	***r 14 + r26***		161.7861	229.1101	234.5973	24.3546
29							
30	***Common***						
31	Executive Expense	cA*r28	0.00780	1.2627	1.7882	1.8310	0.1901
32	Planning Expense	cA*r28	0.00058	0.0939	0.1329	0.1361	0.0141
33	External Relations Expense	cA*r28	0.01303	2.1079	2.9851	3.0566	0.3173
34	Legal Expense	cA*r28	0.00615	0.9947	1.4086	1.4424	0.1497
35	Other Procurement Expense	cA*r28	0.00236	0.3817	0.5405	0.5535	0.0575
36	Research and Development Expense	cA*r28	0.00004	0.0058	0.0083	0.0084	0.0009
37	Other General and Admin Exp	cA*r28	0.01521	2.4610	3.4851	3.5686	0.3705
38	***Total Common Costs***	***Sum r31:r37***		7.3078	10.3487	10.5966	1.1001
39							
40	***TELRIC + Common***	***r28 + r38***		**169.09**	**239.46**	**245.19**	**25.45**

c = column, r = row, s = section, p = page

B. 1.1 Dev Total Prod Costs - Standard Collocation Terminations

	Version 1.0 Created 7/12/01, 4:35:46 PM			1.1.3 Terminations - Monthly Charge							
				DS0 - Monthly Charge							
Row	South Dakota	Source or Calculation	Factor Value (sF)	DS0 Cable Placement per 100 pair per month	DS0 Cable Placement per Termination per month	DS0 Cable per 100 pair per month	DS0 Cable per Termination per month	DS0 Blocks per 100 pair per month	DS0 Blocks per Termination per month	DS0 Block Placement per 100 pair per month	DS0 Block Placement per Termination per month
			A								
1	**Investment**	**sC p1-3 cE**									
2											
3	***Total Investment Based Costs***	**sC p1-3 cK**									
4	***Element Specific Expenses***	**sE p1-2 cB-D**		0.2745	0.0052	0.3531	0.0048	0.6116	0.0084	0.2847	0.0039
5	***Total IBC + Element Specific Expenses***	***r3 + r4***		0.2745	0.0052	0.3531	0.0048	0.6116	0.0084	0.2847	0.0039
6											
7	***Directly Assigned***										
8	Product Management Expense	cA*r5	0.02557	0.0070	0.0001	0.0090	0.0001	0.0156	0.0002	0.0073	0.0001
9	Sales Expense	cA*r5	0.00922	0.0025	0.0000	0.0033	0.0000	0.0056	0.0001	0.0026	0.0000
10	Product Advertising Expense	cA*r5	0.00000	0.0000	0.0000	0.0000	0.0000	0.0000	0.0000	0.0000	0.0000
11	Business Fees (Other Operating Taxes)	cA*(r5+r8:r10)	0.00203	0.0006	0.0000	0.0007	0.0000	0.0013	0.0000	0.0006	0.0000
12	***Directly Assigned Costs***	***Sum r8:r11***		0.0101	0.0002	0.0130	0.0002	0.0226	0.0003	0.0105	0.0001
13											
14	***Total Direct***	***r5 + r12***		0.2846	0.0053	0.3661	0.0050	0.6342	0.0087	0.2952	0.0040
15											
16	***Directly Attributed***										
17	Network Operations	cA*r14	0.04088	0.0116	0.0002	0.0150	0.0002	0.0259	0.0004	0.0121	0.0002
18	Network Support Assets	cA*r14	0.01536	0.0044	0.0001	0.0056	0.0001	0.0097	0.0001	0.0045	0.0001
19	General Support Assets	cA*r14	0.06951	0.0198	0.0004	0.0254	0.0003	0.0441	0.0006	0.0205	0.0003
20	General Purpose Computers	cA*r14	0.03471	0.0099	0.0002	0.0127	0.0002	0.0220	0.0003	0.0102	0.0001
21	Uncollectible - Interconnect	cA*r14	0.00040	0.0001	0.0000	0.0001	0.0000	0.0003	0.0000	0.0001	0.0000
22	Accounting and Finance Expense	cA*r14	0.00884	0.0025	0.0000	0.0032	0.0000	0.0056	0.0001	0.0026	0.0000
23	Human Resources Expense	cA*r14	0.00814	0.0023	0.0000	0.0030	0.0000	0.0052	0.0001	0.0024	0.0000
24	Information Management Expense	cA*r14	0.05701	0.0162	0.0003	0.0209	0.0003	0.0362	0.0005	0.0168	0.0002
25	Intangibles	cA*r14	0.00209	0.0006	0.0000	0.0008	0.0000	0.0013	0.0000	0.0006	0.0000
26	***Total Directly Attributed Costs***	***Sum r17:r25***		0.0674	0.0013	0.0868	0.0012	0.1503	0.0021	0.0699	0.0010
27											
28	***Total Element Long Run Incremental C***	***r 14 + r26***		0.3521	0.0066	0.4529	0.0062	0.7845	0.0107	0.3652	0.0050
29											
30	***Common***										
31	Executive Expense	cA*r28	0.00780	0.0027	0.0001	0.0035	0.0000	0.0061	0.0001	0.0028	0.0000
32	Planning Expense	cA*r28	0.00058	0.0002	0.0000	0.0003	0.0000	0.0005	0.0000	0.0002	0.0000
33	External Relations Expense	cA*r28	0.01303	0.0046	0.0001	0.0059	0.0001	0.0102	0.0001	0.0048	0.0001
34	Legal Expense	cA*r28	0.00615	0.0022	0.0000	0.0028	0.0000	0.0048	0.0001	0.0022	0.0000
35	Other Procurement Expense	cA*r28	0.00236	0.0008	0.0000	0.0011	0.0000	0.0019	0.0000	0.0009	0.0000
36	Research and Development Expense	cA*r28	0.00004	0.0000	0.0000	0.0000	0.0000	0.0000	0.0000	0.0000	0.0000
37	Other General and Admin Exp	cA*r28	0.01521	0.0054	0.0001	0.0069	0.0001	0.0119	0.0002	0.0056	0.0001
38	***Total Common Costs***	***Sum r31:r37***		0.0159	0.0003	0.0205	0.0003	0.0354	0.0005	0.0165	0.0002
39											
40	***TELRIC + Common***	***r28 + r38***		**0.3680**	**0.0069**	**0.4733**	**0.0065**	**0.8199**	**0.0112**	**0.3816**	**0.0052**

c = column, r = row, s = section, p = page

B. 1.1 Dev Total Prod Costs - Standard Collocation Terminations

	Version 1.0 Created 7/12/01, 4:35:46 PM										
				DS1 - Monthly Charge							
Row	South Dakota	Source or Calculation	Factor Value (sF)	DS1 Cable Placement per 28 DS1s per month	DS1 Cable Placement per Termination per month	DS1 Cable per 28 DS1s per month	DS1 Cable per per Termination per month	DS1 Panel per 28 DS1s per month	DS1 Panel per Termination per month	DS1 Panel Placement per 28 DS1s per month	DS1 Panel Placement per Termination per month
			A								
1	**Investment**	**sC p1-3 cE**									
2											
3	***Total Investment Based Costs***	**sC p1-3 cK**									
4	***Element Specific Expenses***	**sE p1-2 cB-D**		0.7653	0.0823	0.6833	0.0735	0.7746	0.0930	0.1633	0.0176
5	***Total IBC + Element Specific Expenses***	***r3 + r4***		0.7653	0.0823	0.6833	0.0735	0.7746	0.0930	0.1633	0.0176
6											
7	***Directly Assigned***										
8	Product Management Expense	cA*r5	0.02557	0.0196	0.0021	0.0175	0.0019	0.0198	0.0024	0.0042	0.0004
9	Sales Expense	cA*r5	0.00922	0.0071	0.0008	0.0063	0.0007	0.0071	0.0009	0.0015	0.0002
10	Product Advertising Expense	cA*r5	0.00000	0.0000	0.0000	0.0000	0.0000	0.0000	0.0000	0.0000	0.0000
11	Business Fees (Other Operating Taxes)	cA*(r5+r8:r10)	0.00203	0.0016	0.0002	0.0014	0.0002	0.0016	0.0002	0.0003	0.0000
12	***Directly Assigned Costs***	***Sum r8:r11***		0.0282	0.0030	0.0252	0.0027	0.0286	0.0034	0.0060	0.0006
13											
14	***Total Direct***	***r5 + r12***		0.7936	0.0853	0.7085	0.0762	0.8032	0.0965	0.1693	0.0182
15											
16	***Directly Attributed***										
17	Network Operations	cA*r14	0.04088	0.0324	0.0035	0.0290	0.0031	0.0328	0.0039	0.0069	0.0007
18	Network Support Assets	cA*r14	0.01536	0.0122	0.0013	0.0109	0.0012	0.0123	0.0015	0.0026	0.0003
19	General Support Assets	cA*r14	0.06951	0.0552	0.0059	0.0492	0.0053	0.0558	0.0067	0.0118	0.0013
20	General Purpose Computers	cA*r14	0.03471	0.0275	0.0030	0.0246	0.0026	0.0279	0.0033	0.0059	0.0006
21	Uncollectible - Interconnect	cA*r14	0.00040	0.0003	0.0000	0.0003	0.0000	0.0003	0.0000	0.0001	0.0000
22	Accounting and Finance Expense	cA*r14	0.00884	0.0070	0.0008	0.0063	0.0007	0.0071	0.0009	0.0015	0.0002
23	Human Resources Expense	cA*r14	0.00814	0.0065	0.0007	0.0058	0.0006	0.0065	0.0008	0.0014	0.0001
24	Information Management Expense	cA*r14	0.05701	0.0452	0.0049	0.0404	0.0043	0.0458	0.0055	0.0097	0.0010
25	Intangibles	cA*r14	0.00209	0.0017	0.0002	0.0015	0.0002	0.0017	0.0002	0.0004	0.0000
26	***Total Directly Attributed Costs***	***Sum r17:r25***		0.1880	0.0202	0.1679	0.0181	0.1903	0.0229	0.0401	0.0043
27											
28	***Total Element Long Run Incremental C***	***r 14 + r26***		0.9816	0.1055	0.8764	0.0942	0.9935	0.1193	0.2095	0.0225
29											
30	***Common***										
31	Executive Expense	cA*r28	0.00780	0.0077	0.0008	0.0068	0.0007	0.0078	0.0009	0.0016	0.0002
32	Planning Expense	cA*r28	0.00058	0.0006	0.0001	0.0005	0.0001	0.0006	0.0001	0.0001	0.0000
33	External Relations Expense	cA*r28	0.01303	0.0128	0.0014	0.0114	0.0012	0.0129	0.0016	0.0027	0.0003
34	Legal Expense	cA*r28	0.00615	0.0060	0.0006	0.0054	0.0006	0.0061	0.0007	0.0013	0.0001
35	Other Procurement Expense	cA*r28	0.00236	0.0023	0.0002	0.0021	0.0002	0.0023	0.0003	0.0005	0.0001
36	Research and Development Expense	cA*r28	0.00004	0.0000	0.0000	0.0000	0.0000	0.0000	0.0000	0.0000	0.0000
37	Other General and Admin Exp	cA*r28	0.01521	0.0149	0.0016	0.0133	0.0014	0.0151	0.0018	0.0032	0.0003
38	***Total Common Costs***	***Sum r31:r37***		0.0443	0.0048	0.0396	0.0043	0.0449	0.0054	0.0095	0.0010
39											
40	***TELRIC + Common***	***r28 + r38***		**1.0259**	**0.1103**	**0.9160**	**0.0985**	**1.0384**	**0.1247**	**0.2189**	**0.0235**

c = column, r = row, s = section, p = page

B. 1.1 Dev Total Prod Costs - Standard Collocation Terminations

	Version 1.0 Created 7/12/01, 4:35:46 PM						
				DS3 - Monthly Charge			
Row	South Dakota	Source or Calculation	Factor Value (sF)	DS3 Cable Placement per Termination per month	DS3 Cable per Termination per month	DS3 Connector per Termination per month	DS3 Connector Placement per Termination per month
			A				
1	**Investment**	**sC p1-3 cE**					
2							
3	***Total Investment Based Costs***	**sC p1-3 cK**					
4	***Element Specific Expenses***	**sE p1-2 cB-D**		0.3116	0.4413	0.4518	0.0469
5	***Total IBC + Element Specific Expenses***	***r3 + r4***		0.3116	0.4413	0.4518	0.0469
6							
7	***Directly Assigned***						
8	Product Management Expense	cA*r5	0.02557	0.0080	0.0113	0.0116	0.0012
9	Sales Expense	cA*r5	0.00922	0.0029	0.0041	0.0042	0.0004
10	Product Advertising Expense	cA*r5	0.00000	0.0000	0.0000	0.0000	0.0000
11	Business Fees (Other Operating Taxes)	cA*(r5+r8:r10)	0.00203	0.0007	0.0009	0.0009	0.0001
12	***Directly Assigned Costs***	***Sum r8:r11***		0.0115	0.0163	0.0167	0.0017
13							
14	***Total Direct***	***r5 + r12***		0.3231	0.4575	0.4685	0.0486
15							
16	***Directly Attributed***						
17	Network Operations	cA*r14	0.04088	0.0132	0.0187	0.0192	0.0020
18	Network Support Assets	cA*r14	0.01536	0.0050	0.0070	0.0072	0.0007
19	General Support Assets	cA*r14	0.06951	0.0225	0.0318	0.0326	0.0034
20	General Purpose Computers	cA*r14	0.03471	0.0112	0.0159	0.0163	0.0017
21	Uncollectible - Interconnect	cA*r14	0.00040	0.0001	0.0002	0.0002	0.0000
22	Accounting and Finance Expense	cA*r14	0.00884	0.0029	0.0040	0.0041	0.0004
23	Human Resources Expense	cA*r14	0.00814	0.0026	0.0037	0.0038	0.0004
24	Information Management Expense	cA*r14	0.05701	0.0184	0.0261	0.0267	0.0028
25	Intangibles	cA*r14	0.00209	0.0007	0.0010	0.0010	0.0001
26	***Total Directly Attributed Costs***	***Sum r17:r25***		0.0766	0.1084	0.1110	0.0115
27							
28	***Total Element Long Run Incremental C***	***r 14 + r26***		0.3996	0.5660	0.5795	0.0602
29							
30	***Common***						
31	Executive Expense	cA*r28	0.00780	0.0031	0.0044	0.0045	0.0005
32	Planning Expense	cA*r28	0.00058	0.0002	0.0003	0.0003	0.0000
33	External Relations Expense	cA*r28	0.01303	0.0052	0.0074	0.0076	0.0008
34	Legal Expense	cA*r28	0.00615	0.0025	0.0035	0.0036	0.0004
35	Other Procurement Expense	cA*r28	0.00236	0.0009	0.0013	0.0014	0.0001
36	Research and Development Expense	cA*r28	0.00004	0.0000	0.0000	0.0000	0.0000
37	Other General and Admin Exp	cA*r28	0.01521	0.0061	0.0086	0.0088	0.0009
38	***Total Common Costs***	***Sum r31:r37***		0.0181	0.0256	0.0262	0.0027
39							
40	***TELRIC + Common***	***r28 + r38***		**0.4177**	**0.5915**	**0.6057**	**0.0629**

c = column, r = row, s = section, p = page

B. 1.2-1.3 Dev Total Prod Costs - Standard Collocation Entrance Facility and Cable Splicing

	Version 1.0 Created 7/12/01, 4:35:46 PM			1.2 Entrance Facility						1.3 Cable Splicing - 90 Day Installation	
				1.2.1 Entrance Facility - 90 Day Installation			1.2.2 Entrance Facility - Monthly Charge				
Row	South Dakota	Source or Calculation	Factor Value (sF)	Standard Shared Per Fiber	Cross Connect per Fiber	Express per Cable	Standard Shared Per Fiber per month	Cross Connect per Fiber per month	Express per Cable per month	Setup	Per fiber Spliced
			A								
1	**Investment**	**sC p1-3 cE**					382.43	382.43	6695.05		
2											
3	***Total Investment Based Costs***	**sC p1-3 cK**					4.0733	4.0733	71.3608		
4	***Element Specific Expenses***	**sE p3 cC&E Sum of Accts**		473.4753	555.3299	6918.2040	0.6867	0.8889	3.5245	363.4016	27.5000
5	***Total IBC + Element Specific Expenses***	***r3 + r4***		473.4753	555.3299	6918.2040	4.7600	4.9622	74.8853	363.4016	27.5000
6											
7	***Directly Assigned***										
8	Product Management Expense	cA*r5	0.02557	12.1045	14.1971	176.8654	0.1217	0.1269	1.9145	9.2904	0.7030
9	Sales Expense	cA*r5	0.00922	4.3676	5.1227	63.8175	0.0439	0.0458	0.6908	3.3522	0.2537
10	Product Advertising Expense	cA*r5	0.00000	0.0000	0.0000	0.0000	0.0000	0.0000	0.0000	0.0000	0.0000
11	Business Fees (Other Operating Taxes)	cA*(r5+r8:r10)	0.00203	0.9922	1.1637	14.4977	0.0100	0.0104	0.1569	0.7615	0.0576
12	***Directly Assigned Costs***	***Sum r8:r11***		17.4643	20.4836	255.1806	0.1756	0.1830	2.7622	13.4042	1.0143
13											
14	***Total Direct***	***r5 + r12***		490.9396	575.8134	7173.3846	4.9356	5.1452	77.6475	376.8058	28.5143
15											
16	***Directly Attributed***										
17	Network Operations	cA*r14	0.04088	20.0697	23.5393	293.2487	0.2018	0.2103	3.1742	15.4039	1.1657
18	Network Support Assets	cA*r14	0.01536	7.5428	8.8468	110.2117	0.0758	0.0791	1.1930	5.7892	0.4381
19	General Support Assets	cA*r14	0.06951	34.1240	40.0234	498.6049	0.3431	0.3576	5.3971	26.1909	1.9820
20	General Purpose Computers	cA*r14	0.03471	17.0424	19.9887	249.0163	0.1713	0.1786	2.6954	13.0804	0.9898
21	Uncollectible - Interconnect	cA*r14	0.00040	0.1968	0.2308	2.8753	0.0020	0.0021	0.0311	0.1510	0.0114
22	Accounting and Finance Expense	cA*r14	0.00884	4.3393	5.0895	63.4038	0.0436	0.0455	0.6863	3.3305	0.2520
23	Human Resources Expense	cA*r14	0.00814	3.9985	4.6898	58.4249	0.0402	0.0419	0.6324	3.0690	0.2322
24	Information Management Expense	cA*r14	0.05701	27.9882	32.8268	408.9506	0.2814	0.2933	4.4266	21.4815	1.6256
25	Intangibles	cA*r14	0.00209	1.0266	1.2041	15.0007	0.0103	0.0108	0.1624	0.7880	0.0596
26	***Total Directly Attributed Costs***	***Sum r17:r25***		116.3284	136.4393	1699.7370	1.1695	1.2192	18.3986	89.2843	6.7565
27											
28	***Total Element Long Run Incremental C***	***r 14 + r26***		607.2680	712.2527	8873.1217	6.1051	6.3644	96.0461	466.0901	35.2708
29											
30	***Common***										
31	Executive Expense	cA*r28	0.00780	4.7397	5.5591	69.2538	0.0476	0.0497	0.7496	3.6378	0.2753
32	Planning Expense	cA*r28	0.00058	0.3523	0.4132	5.1475	0.0035	0.0037	0.0557	0.2704	0.0205
33	External Relations Expense	cA*r28	0.01303	7.9121	9.2799	115.6078	0.0795	0.0829	1.2514	6.0727	0.4595
34	Legal Expense	cA*r28	0.00615	3.7337	4.3792	54.5547	0.0375	0.0391	0.5905	2.8657	0.2169
35	Other Procurement Expense	cA*r28	0.00236	1.4327	1.6804	20.9344	0.0144	0.0150	0.2266	1.0996	0.0832
36	Research and Development Expense	cA*r28	0.00004	0.0219	0.0257	0.3195	0.0002	0.0002	0.0035	0.0168	0.0013
37	Other General and Admin Exp	cA*r28	0.01521	9.2375	10.8345	134.9747	0.0929	0.0968	1.4610	7.0900	0.5365
38	***Total Common Costs***	***Sum r31:r37***		27.4299	32.1719	400.7924	0.2758	0.2875	4.3383	21.0529	1.5932
39											
40	***TELRIC + Common***	***r28 + r38***		**634.70**	**744.42**	**9273.91**	**6.38**	**6.65**	**100.38**	**487.14**	**36.86**

c = column, r = row, s = section, p = page

B. 1.4 Dev Total Prod Costs - Standard Collocation Power Usage

	Version 1.0 Created 7/12/01, 4:35:46 PM			1.4.1 Power Plant per Amp Ordered				1.4.2 Backup AC Power Feed Usage - Monthly Charges					
Row	South Dakota	Source or Calculation	Factor Value (sF)	Power Plant per Amp Ordered Less than 60 AMPS	Power Plant per Amp Ordered Equal to or Greater than 60 Amps	Power Usage-Less than 60 AMPS per Amp Ordered	Power Usage-More than 60 AMPS per Amp Ordered	120 V per Amp per Month	208 V, Single Phase per Amp per Month	208 V, Three Phase per Amp per Month	240 V, Single Phase per Amp per Month	240 V, Three Phase per Amp per Month	480 V, Three Phase per Amp per Month
			A										
1	**Investment**	**sC p1-3 cE**		556.92	368.43			316.89	549.27	950.24	633.78	1096.43	2192.87
2													
3	***Total Investment Based Costs***	**sC p1-3 cK**		9.7957	6.4803			5.5737	9.6611376	16.713768	11.1475	19.2851	38.5702
4	***Element Specific Expenses***	**sE p3-4 cC-E**				1.6125	3.2249	8.4359	14.6222	25.2963	16.8717	29.1881	58.3762
5	***Total IBC + Element Specific Expenses***	***r3 + r4***		9.7957	6.4803	1.6125	3.2249	14.0096	24.2833	42.0101	28.0192	48.4732	96.9464
6													
7	***Directly Assigned***												
8	Product Management Expense	cA*r5	0.02557	0.2504	0.1657	0.0412	0.0824	0.3582	0.6208	1.0740	0.7163	1.2392	2.4785
9	Sales Expense	cA*r5	0.00922	0.0904	0.0598	0.0149	0.0297	0.1292	0.2240	0.3875	0.2585	0.4471	0.8943
10	Product Advertising Expense	cA*r5	0.00000	0.0000	0.0000	0.0000	0.0000	0.0000	0.0000	0.0000	0.0000	0.0000	0.0000
11	Business Fees (Other Operating Taxes)	cA*(r5+r8:r10)	0.00203	0.0205	0.0136	0.0034	0.0068	0.0294	0.0509	0.0880	0.0587	0.1016	0.2032
12	***Directly Assigned Costs***	***Sum r8:r11***		0.3613	0.2390	0.0595	0.1190	0.5167	0.8957	1.5496	1.0335	1.7880	3.5759
13													
14	***Total Direct***	***r5 + r12***		10.1570	6.7193	1.6719	3.3439	14.5263	25.1790	43.5597	29.0527	50.2612	100.5223
15													
16	***Directly Attributed***												
17	Network Operations	cA*r14	0.04088	0.4152	0.2747	0.0683	0.1367	0.5938	1.0293	1.7807	1.1877	2.0547	4.1094
18	Network Support Assets	cA*r14	0.01536	0.1561	0.1032	0.0257	0.0514	0.2232	0.3868	0.6692	0.4464	0.7722	1.5444
19	General Support Assets	cA*r14	0.06951	0.7060	0.4670	0.1162	0.2324	1.0097	1.7501	3.0277	2.0194	3.4935	6.9871
20	General Purpose Computers	cA*r14	0.03471	0.3526	0.2333	0.0580	0.1161	0.5043	0.8741	1.5121	1.0085	1.7448	3.4895
21	Uncollectible - Interconnect	cA*r14	0.00040	0.0041	0.0027	0.0007	0.0013	0.0058	0.0101	0.0175	0.0116	0.0201	0.0403
22	Accounting and Finance Expense	cA*r14	0.00884	0.0898	0.0594	0.0148	0.0296	0.1284	0.2226	0.3850	0.2568	0.4442	0.8885
23	Human Resources Expense	cA*r14	0.00814	0.0827	0.0547	0.0136	0.0272	0.1183	0.2051	0.3548	0.2366	0.4094	0.8187
24	Information Management Expense	cA*r14	0.05701	0.5790	0.3831	0.0953	0.1906	0.8281	1.4354	2.4833	1.6563	2.8654	5.7307
25	Intangibles	cA*r14	0.00209	0.0212	0.0141	0.0035	0.0070	0.0304	0.0527	0.0911	0.0608	0.1051	0.2102
26	***Total Directly Attributed Costs***	***Sum r17:r25***		2.4067	1.5921	0.3962	0.7923	3.4420	5.9662	10.3215	6.8840	11.9094	23.8188
27													
28	***Total Element Long Run Incremental Co***	***r14 + r26***		12.5637	8.3114	2.0681	4.1362	17.9684	31.1452	53.8812	35.9367	62.1706	124.3411
29													
30	***Common***												
31	Executive Expense	cA*r28	0.00780	0.0981	0.0649	0.0161	0.0323	0.1402	0.2431	0.4205	0.2805	0.4852	0.9705
32	Planning Expense	cA*r28	0.00058	0.0073	0.0048	0.0012	0.0024	0.0104	0.0181	0.0313	0.0208	0.0361	0.0721
33	External Relations Expense	cA*r28	0.01303	0.1637	0.1083	0.0269	0.0539	0.2341	0.4058	0.7020	0.4682	0.8100	1.6200
34	Legal Expense	cA*r28	0.00615	0.0772	0.0511	0.0127	0.0254	0.1105	0.1915	0.3313	0.2210	0.3822	0.7645
35	Other Procurement Expense	cA*r28	0.00236	0.0296	0.0196	0.0049	0.0098	0.0424	0.0735	0.1271	0.0848	0.1467	0.2934
36	Research and Development Expense	cA*r28	0.00004	0.0005	0.0003	0.0001	0.0001	0.0006	0.0011	0.0019	0.0013	0.0022	0.0045
37	Other General and Admin Exp	cA*r28	0.01521	0.1911	0.1264	0.0315	0.0629	0.2733	0.4738	0.8196	0.5467	0.9457	1.8914
38	***Total Common Costs***	***Sum r31:r37***		0.5675	0.3754	0.0934	0.1868	0.8116	1.4068	2.4338	1.6232	2.8082	5.6164
39													
40	***TELRIC + Common***	***r28 + r38***		13.1312	8.6869	2.1615	4.3230	18.780	32.552	56.315	37.560	64.979	129.958

c = column, r = row, s = section, p = page

B. 1.4 Dev Total Prod Costs - Standard Collocation Power Usage

	Version 1.0 Created 7/12/01, 4:35:46 PM			1.4.3 Backup AC Power Cable - 90 Day Installation											
Row	South Dakota	Source or Calculation	Factor Value (sF)	20 Amp, Single Phase - Initial Charge per Foot	20 Amp, Three Phase - Initial Charge per Foot	30 Amp, Single Phase - Initial Charge per Foot	30 Amp, Three Phase - Initial Charge per Foot	40 Amp, Single Phase - Initial Charge per Foot	40 Amp, Three Phase - Initial Charge per Foot	50 Amp, Single Phase - Initial Charge per Foot	50 Amp, Three Phase - Initial Charge per Foot	60 Amp, Single Phase - Initial Charge per Foot	60 Amp, Three Phase - Initial Charge per Foot	100 Amp, Single Phase - Initial Charge per Foot	100 Amp, Three Phase - Initial Charge per Foot
			A												
1	**Investment**	**sC p1-3 cE**													
2															
3	***Total Investment Based Costs***	**sC p1-3 cK**													
4	***Element Specific Expenses***	**sE p3-4 cC-E**		5.7827	7.1707	6.2362	8.5646	7.3332	10.0923	8.6992	12.1458	9.8366	13.9807	12.1795	19.0168
5	***Total IBC + Element Specific Expenses***	***r3 + r4***		5.7827	7.1707	6.2362	8.5646	7.3332	10.0923	8.6992	12.1458	9.8366	13.9807	12.1795	19.0168
6															
7	***Directly Assigned***														
8	Product Management Expense	cA*r5	0.02557	0.1478	0.1833	0.1594	0.2190	0.1875	0.2580	0.2224	0.3105	0.2515	0.3574	0.3114	0.4862
9	Sales Expense	cA*r5	0.00922	0.0533	0.0661	0.0575	0.0790	0.0676	0.0931	0.0802	0.1120	0.0907	0.1290	0.1124	0.1754
10	Product Advertising Expense	cA*r5	0.00000	0.0000	0.0000	0.0000	0.0000	0.0000	0.0000	0.0000	0.0000	0.0000	0.0000	0.0000	0.0000
11	Business Fees (Other Operating Taxes)	cA*(r5+r8:r10)	0.00203	0.0121	0.0150	0.0131	0.0179	0.0154	0.0211	0.0182	0.0255	0.0206	0.0293	0.0255	0.0399
12	***Directly Assigned Costs***	***Sum r8:r11***		0.2133	0.2645	0.2300	0.3159	0.2705	0.3723	0.3209	0.4480	0.3628	0.5157	0.4492	0.7014
13															
14	***Total Direct***	***r5 + r12***		5.9960	7.4352	6.4663	8.8805	7.6037	10.4646	9.0200	12.5938	10.1994	14.4963	12.6287	19.7183
15															
16	***Directly Attributed***														
17	Network Operations	cA*r14	0.04088	0.2451	0.3040	0.2643	0.3630	0.3108	0.4278	0.3687	0.5148	0.4170	0.5926	0.5163	0.8061
18	Network Support Assets	cA*r14	0.01536	0.0921	0.1142	0.0993	0.1364	0.1168	0.1608	0.1386	0.1935	0.1567	0.2227	0.1940	0.3030
19	General Support Assets	cA*r14	0.06951	0.4168	0.5168	0.4495	0.6173	0.5285	0.7274	0.6270	0.8754	0.7089	1.0076	0.8778	1.3706
20	General Purpose Computers	cA*r14	0.03471	0.2081	0.2581	0.2245	0.3083	0.2640	0.3633	0.3131	0.4372	0.3541	0.5032	0.4384	0.6845
21	Uncollectible - Interconnect	cA*r14	0.00040	0.0024	0.0030	0.0026	0.0036	0.0030	0.0042	0.0036	0.0050	0.0041	0.0058	0.0051	0.0079
22	Accounting and Finance Expense	cA*r14	0.00884	0.0530	0.0657	0.0572	0.0785	0.0672	0.0925	0.0797	0.1113	0.0901	0.1281	0.1116	0.1743
23	Human Resources Expense	cA*r14	0.00814	0.0488	0.0606	0.0527	0.0723	0.0619	0.0852	0.0735	0.1026	0.0831	0.1181	0.1029	0.1606
24	Information Management Expense	cA*r14	0.05701	0.3418	0.4239	0.3686	0.5063	0.4335	0.5966	0.5142	0.7180	0.5815	0.8264	0.7200	1.1241
25	Intangibles	cA*r14	0.00209	0.0125	0.0155	0.0135	0.0186	0.0159	0.0219	0.0189	0.0263	0.0213	0.0303	0.0264	0.0412
26	***Total Directly Attributed Costs***	***Sum r17:r25***		1.4207	1.7618	1.5322	2.1042	1.8017	2.4796	2.1373	2.9841	2.4167	3.4349	2.9924	4.6723
27															
28	***Total Element Long Run Incremental Co***	***r14 + r26***		7.4167	9.1970	7.9984	10.9847	9.4054	12.9442	11.1573	15.5779	12.6161	17.9313	15.6211	24.3906
29															
30	***Common***														
31	Executive Expense	cA*r28	0.00780	0.0579	0.0718	0.0624	0.0857	0.0734	0.1010	0.0871	0.1216	0.0985	0.1400	0.1219	0.1904
32	Planning Expense	cA*r28	0.00058	0.0043	0.0053	0.0046	0.0064	0.0055	0.0075	0.0065	0.0090	0.0073	0.0104	0.0091	0.0141
33	External Relations Expense	cA*r28	0.01303	0.0966	0.1198	0.1042	0.1431	0.1225	0.1686	0.1454	0.2030	0.1644	0.2336	0.2035	0.3178
34	Legal Expense	cA*r28	0.00615	0.0456	0.0565	0.0492	0.0675	0.0578	0.0796	0.0686	0.0958	0.0776	0.1102	0.0960	0.1500
35	Other Procurement Expense	cA*r28	0.00236	0.0175	0.0217	0.0189	0.0259	0.0222	0.0305	0.0263	0.0368	0.0298	0.0423	0.0369	0.0575
36	Research and Development Expense	cA*r28	0.00004	0.0003	0.0003	0.0003	0.0004	0.0003	0.0005	0.0004	0.0006	0.0005	0.0006	0.0006	0.0009
37	Other General and Admin Exp	cA*r28	0.01521	0.1128	0.1399	0.1217	0.1671	0.1431	0.1969	0.1697	0.2370	0.1919	0.2728	0.2376	0.3710
38	***Total Common Costs***	***Sum r31:r37***		0.3350	0.4154	0.3613	0.4962	0.4248	0.5847	0.5040	0.7036	0.5699	0.8099	0.7056	1.1017
39															
40	***TELRIC + Common***	***r28 + r38***		**7.75**	**9.61**	**8.36**	**11.48**	**9.83**	**13.53**	**11.66**	**16.28**	**13.19**	**18.74**	**16.33**	**25.49**

c = column, r = row, s = section, p = page

B. 1.4 Dev Total Prod Costs - Standard Collocation Power Usage

	Version 1.0 Created 7/12/01, 4:35:46 PM			1.4.4 Backup AC Power Cable - Monthly Charges											
Row	South Dakota	Source or Calculation	Factor Value (sF)	20 Amp, Single Phase per Foot per Month	20 Amp, Three Phase per Foot per Month	30 Amp, Single Phase per Foot per Month	30 Amp, Three Phase per Foot per Month	40 Amp, Single Phase per Foot per Month	40 Amp, Three Phase per Foot per Month	50 Amp, Single Phase per Foot per Month	50 Amp, Three Phase per Foot per Month	60 Amp, Single Phase per Foot per Month	60 Amp, Three Phase per Foot per Month	100 Amp, Single Phase per Foot per Month	100 Amp, Three Phase per Foot per Month
			A												
1	**Investment**	**sC p1-3 cE**													
2															
3	***Total Investment Based Costs***	**sC p1-3 cK**													
4	***Element Specific Expenses***	**sE p3-4 cC-E**		0.0143	0.0177	0.0154	0.0212	0.0181	0.0249	0.0215	0.0300	0.0243	0.0345	0.0301	0.0470
5	***Total IBC + Element Specific Expenses***	***r3 + r4***		0.0143	0.0177	0.0154	0.0212	0.0181	0.0249	0.0215	0.0300	0.0243	0.0345	0.0301	0.0470
6															
7	***Directly Assigned***														
8	Product Management Expense	cA*r5	0.02557	0.0004	0.0005	0.0004	0.0005	0.0005	0.0006	0.0005	0.0008	0.0006	0.0009	0.0008	0.0012
9	Sales Expense	cA*r5	0.00922	0.0001	0.0002	0.0001	0.0002	0.0002	0.0002	0.0002	0.0003	0.0002	0.0003	0.0003	0.0004
10	Product Advertising Expense	cA*r5	0.00000	0.0000	0.0000	0.0000	0.0000	0.0000	0.0000	0.0000	0.0000	0.0000	0.0000	0.0000	0.0000
11	Business Fees (Other Operating Taxes)	cA*(r5+r8:r10)	0.00203	0.0000	0.0000	0.0000	0.0000	0.0000	0.0001	0.0000	0.0001	0.0001	0.0001	0.0001	0.0001
12	***Directly Assigned Costs***	***Sum r8:r11***		0.0005	0.0007	0.0006	0.0008	0.0007	0.0009	0.0008	0.0011	0.0009	0.0013	0.0011	0.0017
13															
14	***Total Direct***	***r5 + r12***		0.0148	0.0184	0.0160	0.0219	0.0188	0.0258	0.0223	0.0311	0.0252	0.0358	0.0312	0.0487
15															
16	***Directly Attributed***														
17	Network Operations	cA*r14	0.04088	0.0006	0.0008	0.0007	0.0009	0.0008	0.0011	0.0009	0.0013	0.0010	0.0015	0.0013	0.0020
18	Network Support Assets	cA*r14	0.01536	0.0002	0.0003	0.0002	0.0003	0.0003	0.0004	0.0003	0.0005	0.0004	0.0006	0.0005	0.0007
19	General Support Assets	cA*r14	0.06951	0.0010	0.0013	0.0011	0.0015	0.0013	0.0018	0.0015	0.0022	0.0018	0.0025	0.0022	0.0034
20	General Purpose Computers	cA*r14	0.03471	0.0005	0.0006	0.0006	0.0008	0.0007	0.0009	0.0008	0.0011	0.0009	0.0012	0.0011	0.0017
21	Uncollectible - Interconnect	cA*r14	0.00040	0.0000	0.0000	0.0000	0.0000	0.0000	0.0000	0.0000	0.0000	0.0000	0.0000	0.0000	0.0000
22	Accounting and Finance Expense	cA*r14	0.00884	0.0001	0.0002	0.0001	0.0002	0.0002	0.0002	0.0002	0.0003	0.0002	0.0003	0.0003	0.0004
23	Human Resources Expense	cA*r14	0.00814	0.0001	0.0001	0.0001	0.0002	0.0002	0.0002	0.0002	0.0003	0.0002	0.0003	0.0003	0.0004
24	Information Management Expense	cA*r14	0.05701	0.0008	0.0010	0.0009	0.0013	0.0011	0.0015	0.0013	0.0018	0.0014	0.0020	0.0018	0.0028
25	Intangibles	cA*r14	0.00209	0.0000	0.0000	0.0000	0.0000	0.0000	0.0001	0.0000	0.0001	0.0001	0.0001	0.0001	0.0001
26	***Total Directly Attributed Costs***	***Sum r17:r25***		0.0035	0.0044	0.0038	0.0052	0.0045	0.0061	0.0053	0.0074	0.0060	0.0085	0.0074	0.0115
27															
28	***Total Element Long Run Incremental Co***	***r 14 + r26***		0.0183	0.0227	0.0198	0.0271	0.0232	0.0320	0.0276	0.0385	0.0312	0.0443	0.0386	0.0603
29															
30	***Common***														
31	Executive Expense	cA*r28	0.00780	0.0001	0.0002	0.0002	0.0002	0.0002	0.0002	0.0002	0.0003	0.0002	0.0003	0.0003	0.0005
32	Planning Expense	cA*r28	0.00058	0.0000	0.0000	0.0000	0.0000	0.0000	0.0000	0.0000	0.0000	0.0000	0.0000	0.0000	0.0000
33	External Relations Expense	cA*r28	0.01303	0.0002	0.0003	0.0003	0.0004	0.0003	0.0004	0.0004	0.0005	0.0004	0.0006	0.0005	0.0008
34	Legal Expense	cA*r28	0.00615	0.0001	0.0001	0.0001	0.0002	0.0001	0.0002	0.0002	0.0002	0.0002	0.0003	0.0002	0.0004
35	Other Procurement Expense	cA*r28	0.00236	0.0000	0.0001	0.0000	0.0001	0.0001	0.0001	0.0001	0.0001	0.0001	0.0001	0.0001	0.0001
36	Research and Development Expense	cA*r28	0.00004	0.0000	0.0000	0.0000	0.0000	0.0000	0.0000	0.0000	0.0000	0.0000	0.0000	0.0000	0.0000
37	Other General and Admin Exp	cA*r28	0.01521	0.0003	0.0003	0.0003	0.0004	0.0004	0.0005	0.0004	0.0006	0.0005	0.0007	0.0006	0.0009
38	***Total Common Costs***	***Sum r31:r37***		0.0008	0.0010	0.0009	0.0012	0.0010	0.0014	0.0012	0.0017	0.0014	0.0020	0.0017	0.0027
39															
40	***TELRIC + Common***	***r28 + r38***		**0.0191**	**0.0237**	**0.0207**	**0.0284**	**0.0243**	**0.0334**	**0.0288**	**0.0402**	**0.0326**	**0.0463**	**0.0403**	**0.0630**

c = column, r = row, s = section, p = page

B. 1.5-1.7 Dev Total Prod Costs - Standard Collocation

	Version 1.0 Created 7/12/01, 4:35:46 PM								
				1.5 Security		1.6 Central office Clock Synchronization	1.7 Interconnection Tie Pair		
Row	South Dakota	Source or Calculation	Factor Value (sF)	Access Card per Employee	Card Access Per Person per Office per Month	C O Clock Synchronization per Port	DS0 Per Connection	DS1 Per Connection	DS3 Per Connection
			A						
1	**Investment**	**sC p1-3 cE**		9.57	250.00	320.3877	20.9927	68.5488	691.39
2									
3	***Total Investment Based Costs***	**sC p1-3 cK**		0.1906	4.9811	5.6353	0.3480	1.2057	12.1609
4	***Element Specific Expenses***	**sE p4 cD**		0.4139					
5	***Total IBC + Element Specific Expenses***	***r3 + r4***		0.6045	4.9811	5.6353	0.3480	1.2057	12.1609
6									
7	***Directly Assigned***								
8	Product Management Expense	cA*r5	0.02557	0.0155	0.1273	0.1441	0.0089	0.0308	0.3109
9	Sales Expense	cA*r5	0.00922	0.0056	0.0459	0.0520	0.0032	0.0111	0.1122
10	Product Advertising Expense	cA*r5	0.00000	0.0000	0.0000	0.0000	0.0000	0.0000	0.0000
11	Business Fees (Other Operating Taxes)	cA*(r5+r8:r10)	0.00203	0.0013	0.0104	0.0118	0.0007	0.0025	0.0255
12	***Directly Assigned Costs***	***Sum r8:r11***		0.0223	0.1837	0.2079	0.0128	0.0445	0.4486
13									
14	***Total Direct***	***r5 + r12***		0.6268	5.1648	5.8431	0.3609	1.2502	12.6094
15									
16	***Directly Attributed***								
17	Network Operations	cA*r14	0.04088	0.0256	0.2111	0.2389	0.0148	0.0511	0.5155
18	Network Support Assets	cA*r14	0.01536	0.0096	0.0794	0.0898	0.0055	0.0192	0.1937
19	General Support Assets	cA*r14	0.06951	0.0436	0.3590	0.4061	0.0251	0.0869	0.8765
20	General Purpose Computers	cA*r14	0.03471	0.0218	0.1793	0.2028	0.0125	0.0434	0.4377
21	Uncollectible - Interconnect	cA*r14	0.00040	0.0003	0.0021	0.0023	0.0001	0.0005	0.0051
22	Accounting and Finance Expense	cA*r14	0.00884	0.0055	0.0457	0.0516	0.0032	0.0110	0.1115
23	Human Resources Expense	cA*r14	0.00814	0.0051	0.0421	0.0476	0.0029	0.0102	0.1027
24	Information Management Expense	cA*r14	0.05701	0.0357	0.2944	0.3331	0.0206	0.0713	0.7189
25	Intangibles	cA*r14	0.00209	0.0013	0.0108	0.0122	0.0008	0.0026	0.0264
26	***Total Directly Attributed Costs***	***Sum r17:r25***		0.1485	1.2238	1.3845	0.0855	0.2962	2.9878
27									
28	***Total Element Long Run Incremental C***	***r14 + r26***		0.7754	6.3886	7.2277	0.4464	1.5464	15.5972
29									
30	***Common***								
31	Executive Expense	cA*r28	0.00780	0.0061	0.0499	0.0564	0.0035	0.0121	0.1217
32	Planning Expense	cA*r28	0.00058	0.0004	0.0037	0.0042	0.0003	0.0009	0.0090
33	External Relations Expense	cA*r28	0.01303	0.0101	0.0832	0.0942	0.0058	0.0201	0.2032
34	Legal Expense	cA*r28	0.00615	0.0048	0.0393	0.0444	0.0027	0.0095	0.0959
35	Other Procurement Expense	cA*r28	0.00236	0.0018	0.0151	0.0171	0.0011	0.0036	0.0368
36	Research and Development Expense	cA*r28	0.00004	0.0000	0.0002	0.0003	0.0000	0.0001	0.0006
37	Other General and Admin Exp	cA*r28	0.01521	0.0118	0.0972	0.1099	0.0068	0.0235	0.2373
38	***Total Common Costs***	***Sum r31:r37***		0.0350	0.2886	0.3265	0.0202	0.0698	0.7045
39									
40	***TELRIC + Common***	***r28 + r38***		**0.8104**	**6.6772**	**7.5541**	**0.4666**	**1.6163**	**16.3018**

B. 2 Dev Total Prod Costs - Cageless Collocation

	Version 1.0 Created 7/12/01, 4:35:46 PM											
				2.1.2 Space Construction - 90 Day Installation								
Row	South Dakota	Source or Calculation	Factor Value (sF)	Space Construction for 2 Bays and 1 - 40A Power Feed - 90 Day	Space Construction Adjustment for 20A Initial Power Feed - 90 Day	Space Construction Adjustment for 30A Initial Power Feed - 90 Day	Space Construction Adjustment for 60A Initial Power Feed - 90 Day	Space Construction Adjustment for Each Additional Bay 90 Day	Space Construction Adjustment for Each Additional 20A Power Feed - 90 Day	Space Construction Adjustment for Each Additional 30A Power Feed - 90 Day	Space Construction Adjustment for Each Additional 40A Power Feed - 90 Day	Space Construction Adjustment for Each Additional 60A Power Feed - 90 Day
			A									
1	**Investment**	**sC p1-3 cE**										
2												
3	***Total Investment Based Costs***	**sC p1-3 cK**										
4	***Element Specific Expenses***	**sE p1-2 cB-D**		20448.60	-1402.28	-889.73	1563.15	1851.87	3647.38	4159.93	5049.66	6612.81
5	***Total IBC + Element Specific Expenses***	***r3 + r4***		20448.60	-1402.28	-889.73	1563.15	1851.87	3647.38	4159.93	5049.66	6612.81
6												
7	***Directly Assigned***											
8	Product Management Expense	cA*r5	0.02557	522.77	-35.85	-22.75	39.96	47.34	93.25	106.35	129.10	169.06
9	Sales Expense	cA*r5	0.00922	188.63	-12.94	-8.21	14.42	17.08	33.65	38.37	46.58	61.00
10	Product Advertising Expense	cA*r5	0.00000	0.00	0.00	0.00	0.00	0.00	0.00	0.00	0.00	0.00
11	Business Fees (Other Operating Taxes)	cA*(r5+r8:r10)	0.00203	42.85	-2.94	-1.86	3.28	3.88	7.64	8.72	10.58	13.86
12	***Directly Assigned Costs***	***Sum r8:r11***		754.25	-51.72	-32.82	57.66	68.31	134.53	153.44	186.26	243.92
13												
14	***Total Direct***	***r5 + r12***		21202.85	-1454.01	-922.55	1620.80	1920.17	3781.91	4313.37	5235.92	6856.72
15												
16	***Directly Attributed***											
17	Network Operations	cA*r14	0.04088	866.77	-59.44	-37.71	66.26	78.50	154.61	176.33	214.05	280.30
18	Network Support Assets	cA*r14	0.01536	325.76	-22.34	-14.17	24.90	29.50	58.11	66.27	80.44	105.35
19	General Support Assets	cA*r14	0.06951	1473.76	-101.06	-64.12	112.66	133.47	262.87	299.81	363.94	476.59
20	General Purpose Computers	cA*r14	0.03471	736.03	-50.47	-32.03	56.26	66.66	131.29	149.73	181.76	238.02
21	Uncollectible - Interconnect	cA*r14	0.00040	8.50	-0.58	-0.37	0.65	0.77	1.52	1.73	2.10	2.75
22	Accounting and Finance Expense	cA*r14	0.00884	187.41	-12.85	-8.15	14.33	16.97	33.43	38.12	46.28	60.60
23	Human Resources Expense	cA*r14	0.00814	172.69	-11.84	-7.51	13.20	15.64	30.80	35.13	42.64	55.85
24	Information Management Expense	cA*r14	0.05701	1208.76	-82.89	-52.59	92.40	109.47	215.60	245.90	298.50	390.90
25	Intangibles	cA*r14	0.00209	44.34	-3.04	-1.93	3.39	4.02	7.91	9.02	10.95	14.34
26	***Total Directly Attributed Costs***	***Sum r17:r25***		5024.03	-344.53	-218.60	384.05	454.99	896.13	1022.06	1240.65	1624.70
27												
28	***Total Element Long Run Incremental Co***	***r14 + r26***		26226.88	-1798.54	-1141.15	2004.85	2375.16	4678.04	5335.42	6476.58	8481.43
29												
30	***Common***											
31	Executive Expense	cA*r28	0.00780	204.70	-14.04	-8.91	15.65	18.54	36.51	41.64	50.55	66.20
32	Planning Expense	cA*r28	0.00058	15.21	-1.04	-0.66	1.16	1.38	2.71	3.10	3.76	4.92
33	External Relations Expense	cA*r28	0.01303	341.71	-23.43	-14.87	26.12	30.95	60.95	69.52	84.38	110.50
34	Legal Expense	cA*r28	0.00615	161.25	-11.06	-7.02	12.33	14.60	28.76	32.80	39.82	52.15
35	Other Procurement Expense	cA*r28	0.00236	61.88	-4.24	-2.69	4.73	5.60	11.04	12.59	15.28	20.01
36	Research and Development Expense	cA*r28	0.00004	0.94	-0.06	-0.04	0.07	0.09	0.17	0.19	0.23	0.31
37	Other General and Admin Exp	cA*r28	0.01521	398.95	-27.36	-17.36	30.50	36.13	71.16	81.16	98.52	129.02
38	***Total Common Costs***	***Sum r31:r37***		1184.65	-81.24	-51.54	90.56	107.28	211.30	241.00	292.54	383.10
39												
40	***TELRIC + Common***	***r28 + r38***		27411.53	-1879.77	-1192.70	2095.41	2482.44	4889.34	5576.42	6769.12	8864.53

c = column, r = row, s = section, p = page

B. 2 Dev Total Prod Costs - Cageless Collocation

	Version 1.0 Created 7/12/01, 4:35:46 PM											
				2.1.3 Space Monthly Charge								
Row	South Dakota	Source or Calculation	Factor Value (sF)	Space Monthly Charge for 2 Bays and 1 - 40A Power Feed per Month	Space Monthly Charge Adjustment for 20A Initial Power Feed per Month	Space Monthly Charge Adjustment for 30A Initial Power Feed per Month	Space Monthly Charge Adjustment for 60A Initial Power Feed per Month	Space Monthly Charge Adjustment for Each Additional Bay per Month	Space Monthly Charge Adjustment for Each Additional 20A Power Feed per Month	Space Monthly Charge Adjustment for Each Additional 30A Power Feed per Month	Space Monthly Charge Adjustment for Each Additional 40A Power Feed per Month	Space Monthly Charge Adjustment for Each Additional 60A Power Feed per Month
			A									
1	**Investment**	**sC p1-3 cE**										
2												
3	***Total Investment Based Costs***	**sC p1-3 cK**										
4	***Element Specific Expenses***	**sE p1-2 cB-D**		50.5126	-3.4640	-2.1978	3.8613	4.5745	9.0098	10.2759	12.4738	16.3351
5	***Total IBC + Element Specific Expenses***	***r3 + r4***		50.5126	-3.4640	-2.1978	3.8613	4.5745	9.0098	10.2759	12.4738	16.3351
6												
7	***Directly Assigned***											
8	Product Management Expense	cA*r5	0.02557	1.2914	-0.0886	-0.0562	0.0987	0.1169	0.2303	0.2627	0.3189	0.4176
9	Sales Expense	cA*r5	0.00922	0.4660	-0.0320	-0.0203	0.0356	0.0422	0.0831	0.0948	0.1151	0.1507
10	Product Advertising Expense	cA*r5	0.00000	0.0000	0.0000	0.0000	0.0000	0.0000	0.0000	0.0000	0.0000	0.0000
11	Business Fees (Other Operating Taxes)	cA*(r5+r8:r10)	0.00203	0.1059	-0.0073	-0.0046	0.0081	0.0096	0.0189	0.0215	0.0261	0.0342
12	***Directly Assigned Costs***	***Sum r8:r11***		1.8632	-0.1278	-0.0811	0.1424	0.1687	0.3323	0.3790	0.4601	0.6025
13												
14	***Total Direct***	***r5 + r12***		52.3758	-3.5917	-2.2789	4.0037	4.7433	9.3422	10.6550	12.9339	16.9376
15												
16	***Directly Attributed***											
17	Network Operations	cA*r14	0.04088	2.1411	-0.1468	-0.0932	0.1637	0.1939	0.3819	0.4356	0.5287	0.6924
18	Network Support Assets	cA*r14	0.01536	0.8047	-0.0552	-0.0350	0.0615	0.0729	0.1435	0.1637	0.1987	0.2602
19	General Support Assets	cA*r14	0.06951	3.6405	-0.2497	-0.1584	0.2783	0.3297	0.6494	0.7406	0.8990	1.1773
20	General Purpose Computers	cA*r14	0.03471	1.8182	-0.1247	-0.0791	0.1390	0.1647	0.3243	0.3699	0.4490	0.5880
21	Uncollectible - Interconnect	cA*r14	0.00040	0.0210	-0.0014	-0.0009	0.0016	0.0019	0.0037	0.0043	0.0052	0.0068
22	Accounting and Finance Expense	cA*r14	0.00884	0.4629	-0.0317	-0.0201	0.0354	0.0419	0.0826	0.0942	0.1143	0.1497
23	Human Resources Expense	cA*r14	0.00814	0.4266	-0.0293	-0.0186	0.0326	0.0386	0.0761	0.0868	0.1053	0.1380
24	Information Management Expense	cA*r14	0.05701	2.9859	-0.2048	-0.1299	0.2283	0.2704	0.5326	0.6074	0.7374	0.9656
25	Intangibles	cA*r14	0.00209	0.1095	-0.0075	-0.0048	0.0084	0.0099	0.0195	0.0223	0.0270	0.0354
26	***Total Directly Attributed Costs***	***Sum r17:r25***		12.4105	-0.8511	-0.5400	0.9487	1.1239	2.2136	2.5247	3.0647	4.0134
27												
28	***Total Element Long Run Incremental Co***	***r 14 + r26***		64.7862	-4.4428	-2.8189	4.9524	5.8672	11.5558	13.1797	15.9986	20.9510
29												
30	***Common***											
31	Executive Expense	cA*r28	0.00780	0.5056	-0.0347	-0.0220	0.0387	0.0458	0.0902	0.1029	0.1249	0.1635
32	Planning Expense	cA*r28	0.00058	0.0376	-0.0026	-0.0016	0.0029	0.0034	0.0067	0.0076	0.0093	0.0122
33	External Relations Expense	cA*r28	0.01303	0.8441	-0.0579	-0.0367	0.0645	0.0764	0.1506	0.1717	0.2084	0.2730
34	Legal Expense	cA*r28	0.00615	0.3983	-0.0273	-0.0173	0.0304	0.0361	0.0710	0.0810	0.0984	0.1288
35	Other Procurement Expense	cA*r28	0.00236	0.1529	-0.0105	-0.0067	0.0117	0.0138	0.0273	0.0311	0.0377	0.0494
36	Research and Development Expense	cA*r28	0.00004	0.0023	-0.0002	-0.0001	0.0002	0.0002	0.0004	0.0005	0.0006	0.0008
37	Other General and Admin Exp	cA*r28	0.01521	0.9855	-0.0676	-0.0429	0.0753	0.0892	0.1758	0.2005	0.2434	0.3187
38	***Total Common Costs***	***Sum r31:r37***		2.9263	-0.2007	-0.1273	0.2237	0.2650	0.5220	0.5953	0.7226	0.9463
39												
40	***TELRIC + Common***	***r28 + r38***		**67.7126**	**-4.6435**	**-2.9462**	**5.1761**	**6.1322**	**12.0778**	**13.7750**	**16.7212**	**21.8974**

c = column, r = row, s = section, p = page

B. 2 Dev Total Prod Costs - Cageless Collocation

	Version 1.0 Created 7/12/01, 4:35:46 PM				
				2.2 Rent	2.3 Quote Preparation Fee - Cageless Construction
Row	South Dakota	Source or Calculation	Factor Value (sF)	Rent per Square Foot	Quotation Preparation Fee
			A		
1	**Investment**	**sC p1-3 cE**		170.44	
2					
3	***Total Investment Based Costs***	**sC p1-3 cK**		2.2745	
4	***Element Specific Expenses***	**sE p1-2 cB-D**			3174.25
5	***Total IBC + Element Specific Expenses***	***r3 + r4***		2.2745	3174.25
6					
7	***Directly Assigned***				
8	Product Management Expense	cA*r5	0.02557	0.0581	81.15
9	Sales Expense	cA*r5	0.00922	0.0210	29.28
10	Product Advertising Expense	cA*r5	0.00000	0.0000	0.00
11	Business Fees (Other Operating Taxes)	cA*(r5+r8:r10)	0.00203	0.0048	6.65
12	***Directly Assigned Costs***	***Sum r8:r11***		0.0839	117.08
13					
14	***Total Direct***	***r5 + r12***		2.3584	3291.33
15					
16	***Directly Attributed***				
17	Network Operations	cA*r14	0.04088	0.0964	134.55
18	Network Support Assets	cA*r14	0.01536	0.0362	50.57
19	General Support Assets	cA*r14	0.06951	0.1639	228.77
20	General Purpose Computers	cA*r14	0.03471	0.0819	114.26
21	Uncollectible - Interconnect	cA*r14	0.00040	0.0009	1.32
22	Accounting and Finance Expense	cA*r14	0.00884	0.0208	29.09
23	Human Resources Expense	cA*r14	0.00814	0.0192	26.81
24	Information Management Expense	cA*r14	0.05701	0.1345	187.64
25	Intangibles	cA*r14	0.00209	0.0049	6.88
26	***Total Directly Attributed Costs***	***Sum r17:r25***		0.5588	779.88
27					
28	***Total Element Long Run Incremental Co***	***r14 + r26***		2.9172	4071.21
29					
30	***Common***				
31	Executive Expense	cA*r28	0.00780	0.0228	31.78
32	Planning Expense	cA*r28	0.00058	0.0017	2.36
33	External Relations Expense	cA*r28	0.01303	0.0380	53.04
34	Legal Expense	cA*r28	0.00615	0.0179	25.03
35	Other Procurement Expense	cA*r28	0.00236	0.0069	9.61
36	Research and Development Expense	cA*r28	0.00004	0.0001	0.15
37	Other General and Admin Exp	cA*r28	0.01521	0.0444	61.93
38	***Total Common Costs***	***Sum r31:r37***		0.1318	183.89
39					
40	***TELRIC + Common***	***r28 + r38***		3.0490	4255.11

c = column, r = row, s = section, p = page

B. 3.1 Dev Total Prod Costs - Caged Collocation Space Construction

	Version 1.0 Created 7/12/01, 4:35:46 PM																
				3.1.1 Space Construction - 90 Day Installation				Space Construction - Fencing Credit				er Feed Adjustments - 90 Day					
Row	South Dakota	Source or Calculation	Factor Value (sF)	Cage-Up to 100 Sq Ft - 90 Day	Cage-101 Sq Ft to 200 Sq Ft - 90 Day	Cage-201 Sq Ft to 300 Sq Ft - 90 Day	Cage-301 Sq Ft to 400 Sq Ft - 90 Day	Cage-Up to 100 Sq Ft - Fencing Credit	Cage-101 Sq Ft to 200 Sq Ft - Fencing Credit	Cage-201 Sq Ft to 300 Sq Ft - Fencing Credit	Cage-301 Sq Ft to 400 Sq Ft - Fencing Credit	Space Construction Adjustment for 20A Initial Power Feed - 90 Day	Space Construction Adjustment for 30A Initial Power Feed - 90 Day	Space Construction Adjustment for 40A Initial Power Feed - 90 Day	Space Construction Adjustment for 100A Initial Power Feed - 90 Day	Space Construction Adjustment for 200A Initial Power Feed -
			A														
1	**Investment**	**sC p1-3 cE**															
2																	
3	***Total Investment Based Costs***	**sC p1-3 cK**															
4	***Element Specific Expenses***	**sE p2 cC&D**		36730.18	38142.18	39240.18	40616.18	-3970.00	-4950.00	-5560.00	-6140.00	-5563.89	-5084.33	-4073.85	6785.12	21907.4
5	***Total IBC + Element Specific Expenses***	***r3 + r4***		36730.18	38142.18	39240.18	40616.18	-3970.00	-4950.00	-5560.00	-6140.00	-5563.89	-5084.33	-4073.85	6785.12	21907.4
6																	
7	***Directly Assigned***																
8	Product Management Expense	cA*r5	0.02557	939.01	975.11	1003.18	1038.36	-101.49	-126.55	-142.14	-156.97	-142.24	-129.98	-104.15	173.46	560.0
9	Sales Expense	cA*r5	0.00922	338.82	351.85	361.97	374.67	-36.62	-45.66	-51.29	-56.64	-51.32	-46.90	-37.58	62.59	202.0
10	Product Advertising Expense	cA*r5	0.00000	0.00	0.00	0.00	0.00	0.00	0.00	0.00	0.00	0.00	0.00	0.00	0.00	0.0
11	Business Fees (Other Operating Taxes)	cA*(r5+r8:r10)	0.00203	76.97	79.93	82.23	85.11	-8.32	-10.37	-11.65	-12.87	-11.66	-10.65	-8.54	14.22	45.9
12	***Directly Assigned Costs***	***Sum r8:r11***		1354.81	1406.89	1447.39	1498.14	-146.43	-182.58	-205.08	-226.48	-205.23	-187.54	-150.27	250.27	808.0
13																	
14	***Total Direct***	***r5 + r12***		38084.99	39549.07	40687.57	42114.32	-4116.43	-5132.58	-5765.08	-6366.48	-5769.12	-5271.87	-4224.12	7035.39	22715.4
15																	
16	***Directly Attributed***																
17	Network Operations	cA*r14	0.04088	1556.92	1616.77	1663.31	1721.64	-168.28	-209.82	-235.68	-260.26	-235.84	-215.51	-172.68	287.61	928.6
18	Network Support Assets	cA*r14	0.01536	585.14	607.63	625.12	647.04	-63.24	-78.86	-88.57	-97.81	-88.64	-81.00	-64.90	108.09	349.0
19	General Support Assets	cA*r14	0.06951	2647.20	2748.96	2828.10	2927.27	-286.12	-356.75	-400.72	-442.52	-401.00	-366.43	-293.61	489.01	1578.9
20	General Purpose Computers	cA*r14	0.03471	1322.08	1372.90	1412.43	1461.95	-142.90	-178.17	-200.13	-221.01	-200.27	-183.01	-146.64	244.23	788.5
21	Uncollectible - Interconnect	cA*r14	0.00040	15.27	15.85	16.31	16.88	-1.65	-2.06	-2.31	-2.55	-2.31	-2.11	-1.69	2.82	9.1
22	Accounting and Finance Expense	cA*r14	0.00884	336.62	349.56	359.63	372.24	-36.38	-45.37	-50.96	-56.27	-50.99	-46.60	-37.34	62.18	200.7
23	Human Resources Expense	cA*r14	0.00814	310.19	322.11	331.39	343.01	-33.53	-41.80	-46.95	-51.85	-46.99	-42.94	-34.40	57.30	185.0
24	Information Management Expense	cA*r14	0.05701	2171.20	2254.67	2319.58	2400.91	-234.68	-292.61	-328.66	-362.95	-328.89	-300.55	-240.81	401.08	1295.0
25	Intangibles	cA*r14	0.00209	79.64	82.70	85.08	88.07	-8.61	-10.73	-12.06	-13.31	-12.06	-11.02	-8.83	14.71	47.5
26	***Total Directly Attributed Costs***	***Sum r17:r25***		9024.26	9371.17	9640.94	9979.01	-975.39	-1216.17	-1366.04	-1508.54	-1367.00	-1249.17	-1000.91	1667.04	5382.4
27																	
28	***Total Element Long Run Incremental C***	***r 14 + r26***		47109.24	48920.24	50328.51	52093.33	-5091.83	-6348.75	-7131.12	-7875.02	-7136.11	-6521.04	-5225.02	8702.43	28097.9
29																	
30	***Common***																
31	Executive Expense	cA*r28	0.00780	367.68	381.82	392.81	406.58	-39.74	-49.55	-55.66	-61.46	-55.70	-50.90	-40.78	67.92	219.3
32	Planning Expense	cA*r28	0.00058	27.33	28.38	29.20	30.22	-2.95	-3.68	-4.14	-4.57	-4.14	-3.78	-3.03	5.05	16.3
33	External Relations Expense	cA*r28	0.01303	613.79	637.38	655.73	678.72	-66.34	-82.72	-92.91	-102.60	-92.98	-84.96	-68.08	113.38	366.0
34	Legal Expense	cA*r28	0.00615	289.64	300.78	309.44	320.29	-31.31	-39.03	-43.84	-48.42	-43.88	-40.09	-32.13	53.51	172.7
35	Other Procurement Expense	cA*r28	0.00236	111.15	115.42	118.74	122.90	-12.01	-14.98	-16.82	-18.58	-16.84	-15.39	-12.33	20.53	66.2
36	Research and Development Expense	cA*r28	0.00004	1.70	1.76	1.81	1.88	-0.18	-0.23	-0.26	-0.28	-0.26	-0.23	-0.19	0.31	1.0
37	Other General and Admin Exp	cA*r28	0.01521	716.61	744.16	765.58	792.42	-77.45	-96.57	-108.48	-119.79	-108.55	-99.20	-79.48	132.38	427.4
38	***Total Common Costs***	***Sum r31:r37***		2127.89	2209.69	2273.30	2353.02	-229.99	-286.77	-322.11	-355.71	-322.33	-294.55	-236.01	393.08	1269.1
39																	
40	***TELRIC + Common***	***r28 + r38***		49237.13	51129.93	52601.81	54446.35	-5321.82	-6635.52	-7453.23	-8230.72	-7458.44	-6815.59	-5461.04	9095.51	29367.1

c = column, r = row, s = section, p = page

B. 3.1 Dev Total Prod Costs - Caged Collocation Space Construction

	Version 1.0 Created 7/12/01, 4:35:46 PM				
Row	South Dakota	Source or Calculation	Factor Value (sF)	Space Construction Adjustment for 300A Initial Power Feed - 90 Day	Space Construction Adjustment for 400A Initial Power Feed - 90 Day
			A		
1	**Investment**	**sC p1-3 cE**			
2					
3	***Total Investment Based Costs***	**sC p1-3 cK**			
4	***Element Specific Expenses***	**sE p2 cC&D**		42300.24	64779.41
5	***Total IBC + Element Specific Expenses***	***r3 + r4***		42300.24	64779.41
6					
7	***Directly Assigned***				
8	Product Management Expense	cA*r5	0.02557	1081.41	1656.10
9	Sales Expense	cA*r5	0.00922	390.20	597.56
10	Product Advertising Expense	cA*r5	0.00000	0.00	0.00
11	Business Fees (Other Operating Taxes)	cA*(r5+r8:r10)	0.00203	88.64	135.75
12	***Directly Assigned Costs***	***Sum r8:r11***		1560.26	2389.41
13					
14	***Total Direct***	***r5 + r12***		43860.50	67168.82
15					
16	***Directly Attributed***				
17	Network Operations	cA*r14	0.04088	1793.02	2745.87
18	Network Support Assets	cA*r14	0.01536	673.87	1031.98
19	General Support Assets	cA*r14	0.06951	3048.64	4668.74
20	General Purpose Computers	cA*r14	0.03471	1522.57	2331.69
21	Uncollectible - Interconnect	cA*r14	0.00040	17.58	26.92
22	Accounting and Finance Expense	cA*r14	0.00884	387.67	593.69
23	Human Resources Expense	cA*r14	0.00814	357.23	547.07
24	Information Management Expense	cA*r14	0.05701	2500.46	3829.26
25	Intangibles	cA*r14	0.00209	91.72	140.46
26	***Total Directly Attributed Costs***	***Sum r17:r25***		10392.77	15915.69
27					
28	***Total Element Long Run Incremental C***	***r 14 + r26***		54253.26	83084.50
29					
30	***Common***				
31	Executive Expense	cA*r28	0.00780	423.44	648.47
32	Planning Expense	cA*r28	0.00058	31.47	48.20
33	External Relations Expense	cA*r28	0.01303	706.87	1082.51
34	Legal Expense	cA*r28	0.00615	333.57	510.63
35	Other Procurement Expense	cA*r28	0.00236	128.00	196.02
36	Research and Development Expense	cA*r28	0.00004	1.95	2.99
37	Other General and Admin Exp	cA*r28	0.01521	825.28	1263.85
38	***Total Common Costs***	***Sum r31:r37***		2450.58	3752.67
39					
40	***TELRIC + Common***	***r28 + r38***		56703.84	86837.37

c = column, r = row, s = section, p = page

B. 3.1 Dev Total Prod Costs - Caged Collocation Space Construction

	Version 1.0 Created 7/12/01, 4:35:46 PM			3.1.3 Each Additional Power Feed Adjustments - 90 Day							
Row	South Dakota	Source or Calculation	Factor Value (sF)	Space Construction Adjustment for Each Additional 20A Power Feed - 90 Day	Space Construction Adjustment for Each Additional 30A Power Feed - 90 Day	Space Construction Adjustment for Each Additional 40A Power Feed - 90 Day	Space Construction Adjustment for Each Additional 60A Power Feed - 90 Day	Space Construction Adjustment for Each Additional 100A Power Feed - 90 Day	Space Construction Adjustment for Each Additional 200A Power Feed - 90 Day	Space Construction Adjustment for Each Additional 300A Power Feed - 90 Day	Space Construction Adjustment for Each Additional 400A Power Feed - 90 Day
			A								
1	**Investment**	**sC p1-3 cE**									
2											
3	***Total Investment Based Costs***	**sC p1-3 cK**									
4	***Element Specific Expenses***	**sE p2 cC&D**		4567.74	5047.30	6057.78	10131.63	16916.75	32039.06	52431.86	74911.03
5	***Total IBC + Element Specific Expenses***	***r3 + r4***		4567.74	5047.30	6057.78	10131.63	16916.75	32039.06	52431.86	74911.03
6											
7	***Directly Assigned***										
8	Product Management Expense	cA*r5	0.02557	116.78	129.04	154.87	259.02	432.48	819.09	1340.43	1915.12
9	Sales Expense	cA*r5	0.00922	42.14	46.56	55.88	93.46	156.05	295.55	483.66	691.02
10	Product Advertising Expense	cA*r5	0.00000	0.00	0.00	0.00	0.00	0.00	0.00	0.00	0.00
11	Business Fees (Other Operating Taxes)	cA*(r5+r8:r10)	0.00203	9.57	10.58	12.69	21.23	35.45	67.14	109.88	156.98
12	***Directly Assigned Costs***	***Sum r8:r11***		168.48	186.17	223.44	373.71	623.98	1181.77	1933.97	2763.12
13											
14	***Total Direct***	***r5 + r12***		4736.22	5233.47	6281.22	10505.34	17540.73	33220.83	54365.83	77674.16
15											
16	***Directly Attributed***										
17	Network Operations	cA*r14	0.04088	193.62	213.94	256.78	429.46	717.07	1358.07	2222.48	3175.33
18	Network Support Assets	cA*r14	0.01536	72.77	80.41	96.50	161.40	269.50	510.40	835.28	1193.38
19	General Support Assets	cA*r14	0.06951	329.20	363.77	436.59	730.20	1219.21	2309.10	3778.84	5398.95
20	General Purpose Computers	cA*r14	0.03471	164.41	181.67	218.05	364.68	608.91	1153.23	1887.25	2696.37
21	Uncollectible - Interconnect	cA*r14	0.00040	1.90	2.10	2.52	4.21	7.03	13.32	21.79	31.13
22	Accounting and Finance Expense	cA*r14	0.00884	41.86	46.26	55.52	92.85	155.04	293.63	480.53	686.54
23	Human Resources Expense	cA*r14	0.00814	38.57	42.62	51.16	85.56	142.86	270.57	442.79	632.63
24	Information Management Expense	cA*r14	0.05701	270.01	298.36	358.09	598.90	999.99	1893.90	3099.37	4428.16
25	Intangibles	cA*r14	0.00209	9.90	10.94	13.13	21.97	36.68	69.47	113.69	162.43
26	***Total Directly Attributed Costs***	***Sum r17:r25***		1122.25	1240.07	1488.34	2489.24	4156.28	7871.69	12882.01	18404.93
27											
28	***Total Element Long Run Incremental C***	***r14 + r26***		5858.47	6473.54	7769.56	12994.58	21697.01	41092.52	67247.85	96079.09
29											
30	***Common***										
31	Executive Expense	cA*r28	0.00780	45.72	50.53	60.64	101.42	169.34	320.72	524.86	749.89
32	Planning Expense	cA*r28	0.00058	3.40	3.76	4.51	7.54	12.59	23.84	39.01	55.74
33	External Relations Expense	cA*r28	0.01303	76.33	84.34	101.23	169.31	282.69	535.39	876.17	1251.81
34	Legal Expense	cA*r28	0.00615	36.02	39.80	47.77	79.89	133.40	252.65	413.46	590.72
35	Other Procurement Expense	cA*r28	0.00236	13.82	15.27	18.33	30.66	51.19	96.95	158.66	226.68
36	Research and Development Expense	cA*r28	0.00004	0.21	0.23	0.28	0.47	0.78	1.48	2.42	3.46
37	Other General and Admin Exp	cA*r28	0.01521	89.12	98.47	118.19	197.67	330.05	625.08	1022.95	1461.52
38	***Total Common Costs***	***Sum r31:r37***		264.62	292.41	350.95	586.96	980.04	1856.12	3037.54	4339.82
39											
40	***TELRIC + Common***	***r28 + r38***		**6123.09**	**6765.95**	**8120.50**	**13581.54**	**22677.05**	**42948.64**	**70285.38**	**100418.91**

c = column, r = row, s = section, p = page

B. 3.1 Dev Total Prod Costs - Caged Collocation Space Construction

	Version 1.0 Created 7/12/01, 4:35:46 PM															
				3.1.4 Space Monthly Charge				Space Monthly Charge - Fencing Credit				3.1.5 Initial Power Feed Monthly Charge Adjustm				
Row	South Dakota	Source or Calculation	Factor Value (sF)	Cage-Up to 100 Sq Ft Monthly Charge	Cage-101 Sq Ft to 200 Sq Ft Monthly Charge	Cage-201 Sq Ft to 300 Sq Ft Monthly Charge	Cage-301 Sq Ft to 400 Sq Ft Monthly Charge	Cage-Up to 100 Sq Ft Monthly Charge - Fencing Credit	Cage-101 Sq Ft to 200 Sq Ft Monthly Charge - Fencing Credit	Cage-201 Sq Ft to 300 Sq Ft Monthly Charge - Fencing Credit	Cage-301 Sq Ft to 400 Sq Ft Monthly Charge - Fencing Credit	Space Monthly Charge Adjustment for 20A Initial Power Feed	Space Monthly Charge Adjustment for 30A Initial Power Feed	Space Monthly Charge Adjustment for 40A Initial Power Feed	Space Monthly Charge Adjustment for 100A Initial Power Feed	Space Monthly Charge Adjustment for 200A Initial Power Feed
			A													
1	**Investment**	**sC p1-3 cE**														
2																
3	***Total Investment Based Costs***	**sC p1-3 cK**														
4	***Element Specific Expenses***	**sE p2 cC&D**		90.7317	94.2196	96.9319	100.3310	-9.8068	-12.2276	-13.7344	-15.1672	-13.7440	-12.5594	-10.0633	16.7607	54.1162
5	***Total IBC + Element Specific Expenses***	***r3 + r4***		90.7317	94.2196	96.9319	100.3310	-9.8068	-12.2276	-13.7344	-15.1672	-13.7440	-12.5594	-10.0633	16.7607	54.1162
6																
7	***Directly Assigned***															
8	Product Management Expense	cA*r5	0.02557	2.3196	2.4087	2.4781	2.5650	-0.2507	-0.3126	-0.3511	-0.3878	-0.3514	-0.3211	-0.2573	0.4285	1.3835
9	Sales Expense	cA*r5	0.00922	0.8370	0.8691	0.8942	0.9255	-0.0905	-0.1128	-0.1267	-0.1399	-0.1268	-0.1159	-0.0928	0.1546	0.4992
10	Product Advertising Expense	cA*r5	0.00000	0.0000	0.0000	0.0000	0.0000	0.0000	0.0000	0.0000	0.0000	0.0000	0.0000	0.0000	0.0000	0.0000
11	Business Fees (Other Operating Taxes)	cA*(r5+r8:r10)	0.00203	0.1901	0.1974	0.2031	0.2103	-0.0206	-0.0256	-0.0288	-0.0318	-0.0288	-0.0263	-0.0211	0.0351	0.1134
12	***Directly Assigned Costs***	***Sum r8:r11***		3.3467	3.4753	3.5754	3.7007	-0.3617	-0.4510	-0.5066	-0.5594	-0.5070	-0.4633	-0.3712	0.6182	1.9961
13																
14	***Total Direct***	***r5 + r12***		94.0784	97.6950	100.5073	104.0317	-10.1685	-12.6786	-14.2410	-15.7266	-14.2510	-13.0227	-10.4345	17.3790	56.1123
15																
16	***Directly Attributed***															
17	Network Operations	cA*r14	0.04088	3.8459	3.9938	4.1087	4.2528	-0.4157	-0.5183	-0.5822	-0.6429	-0.5826	-0.5324	-0.4266	0.7105	2.2939
18	Network Support Assets	cA*r14	0.01536	1.4454	1.5010	1.5442	1.5983	-0.1562	-0.1948	-0.2188	-0.2416	-0.2190	-0.2001	-0.1603	0.2670	0.8621
19	General Support Assets	cA*r14	0.06951	6.5392	6.7905	6.9860	7.2310	-0.7068	-0.8813	-0.9899	-1.0931	-0.9906	-0.9052	-0.7253	1.2080	3.9002
20	General Purpose Computers	cA*r14	0.03471	3.2658	3.3914	3.4890	3.6113	-0.3530	-0.4401	-0.4944	-0.5459	-0.4947	-0.4521	-0.3622	0.6033	1.9479
21	Uncollectible - Interconnect	cA*r14	0.00040	0.0377	0.0392	0.0403	0.0417	-0.0041	-0.0051	-0.0057	-0.0063	-0.0057	-0.0052	-0.0042	0.0070	0.0225
22	Accounting and Finance Expense	cA*r14	0.00884	0.8315	0.8635	0.8884	0.9195	-0.0899	-0.1121	-0.1259	-0.1390	-0.1260	-0.1151	-0.0922	0.1536	0.4960
23	Human Resources Expense	cA*r14	0.00814	0.7662	0.7957	0.8186	0.8473	-0.0828	-0.1033	-0.1160	-0.1281	-0.1161	-0.1061	-0.0850	0.1415	0.4570
24	Information Management Expense	cA*r14	0.05701	5.3634	5.5695	5.7299	5.9308	-0.5797	-0.7228	-0.8119	-0.8966	-0.8124	-0.7424	-0.5949	0.9908	3.1989
25	Intangibles	cA*r14	0.00209	0.1967	0.2043	0.2102	0.2175	-0.0213	-0.0265	-0.0298	-0.0329	-0.0298	-0.0272	-0.0218	0.0363	0.1173
26	***Total Directly Attributed Costs***	***Sum r17:r25***		22.2919	23.1489	23.8153	24.6504	-2.4094	-3.0042	-3.3744	-3.7264	-3.3768	-3.0857	-2.4725	4.1180	13.2958
27																
28	***Total Element Long Run Incremental Cr***	***r14 + r26***		116.3703	120.8438	124.3226	128.6821	-12.5779	-15.6828	-17.6155	-19.4530	-17.6278	-16.1084	-12.9070	21.4969	69.4081
29																
30	***Common***															
31	Executive Expense	cA*r28	0.00780	0.9083	0.9432	0.9703	1.0043	-0.0982	-0.1224	-0.1375	-0.1518	-0.1376	-0.1257	-0.1007	0.1678	0.5417
32	Planning Expense	cA*r28	0.00058	0.0675	0.0701	0.0721	0.0747	-0.0073	-0.0091	-0.0102	-0.0113	-0.0102	-0.0093	-0.0075	0.0125	0.0403
33	External Relations Expense	cA*r28	0.01303	1.5162	1.5745	1.6198	1.6766	-0.1639	-0.2043	-0.2295	-0.2535	-0.2297	-0.2099	-0.1682	0.2801	0.9043
34	Legal Expense	cA*r28	0.00615	0.7155	0.7430	0.7644	0.7912	-0.0773	-0.0964	-0.1083	-0.1196	-0.1084	-0.0990	-0.0794	0.1322	0.4267
35	Other Procurement Expense	cA*r28	0.00236	0.2746	0.2851	0.2933	0.3036	-0.0297	-0.0370	-0.0416	-0.0459	-0.0416	-0.0380	-0.0305	0.0507	0.1638
36	Research and Development Expense	cA*r28	0.00004	0.0042	0.0044	0.0045	0.0046	-0.0005	-0.0006	-0.0006	-0.0007	-0.0006	-0.0006	-0.0005	0.0008	0.0025
37	Other General and Admin Exp	cA*r28	0.01521	1.7702	1.8382	1.8911	1.9575	-0.1913	-0.2386	-0.2680	-0.2959	-0.2681	-0.2450	-0.1963	0.3270	1.0558
38	***Total Common Costs***	***Sum r31:r37***		5.2564	5.4584	5.6156	5.8125	-0.5681	-0.7084	-0.7957	-0.8787	-0.7962	-0.7276	-0.5830	0.9710	3.1351
39																
40	***TELRIC + Common***	***r28 + r38***		**121.63**	**126.30**	**129.94**	**134.49**	**-13.15**	**-16.39**	**-18.41**	**-20.33**	**-18.42**	**-16.84**	**-13.49**	**22.47**	**72.54**

c = column, r = row, s = section, p = page

B. 3.1 Dev Total Prod Costs - Caged Collocation Space Construction

	Version 1.0 Created 7/12/01, 4:35:46 PM				
				ents	
Row	South Dakota	Source or Calculation	Factor Value (sF)	Space Monthly Charge Adjustment for 300A Initial Power Feed	Space Monthly Charge Adjustment for 400A Initial Power Feed
			A		
1	**Investment**	**sC p1-3 cE**			
2					
3	***Total Investment Based Costs***	**sC p1-3 cK**			
4	***Element Specific Expenses***	**sE p2 cC&D**		104.4910	160.0195
5	***Total IBC + Element Specific Expenses***	***r3 + r4***		104.4910	160.0195
6					
7	***Directly Assigned***				
8	Product Management Expense	cA*r5	0.02557	2.6713	4.0909
9	Sales Expense	cA*r5	0.00922	0.9639	1.4761
10	Product Advertising Expense	cA*r5	0.00000	0.0000	0.0000
11	Business Fees (Other Operating Taxes)	cA*(r5+r8:r10)	0.00203	0.2190	0.3353
12	***Directly Assigned Costs***	***Sum r8:r11***		3.8542	5.9024
13					
14	***Total Direct***	***r5 + r12***		108.3452	165.9219
15					
16	***Directly Attributed***				
17	Network Operations	cA*r14	0.04088	4.4292	6.7829
18	Network Support Assets	cA*r14	0.01536	1.6646	2.5492
19	General Support Assets	cA*r14	0.06951	7.5308	11.5328
20	General Purpose Computers	cA*r14	0.03471	3.7611	5.7598
21	Uncollectible - Interconnect	cA*r14	0.00040	0.0434	0.0665
22	Accounting and Finance Expense	cA*r14	0.00884	0.9576	1.4665
23	Human Resources Expense	cA*r14	0.00814	0.8824	1.3514
24	Information Management Expense	cA*r14	0.05701	6.1767	9.4591
25	Intangibles	cA*r14	0.00209	0.2266	0.3470
26	***Total Directly Attributed Costs***	***Sum r17:r25***		25.6724	39.3153
27					
28	***Total Element Long Run Incremental C***	***r14 + r26***		134.0176	205.2371
29					
30	***Common***				
31	Executive Expense	cA*r28	0.00780	1.0460	1.6019
32	Planning Expense	cA*r28	0.00058	0.0777	0.1191
33	External Relations Expense	cA*r28	0.01303	1.7461	2.6740
34	Legal Expense	cA*r28	0.00615	0.8240	1.2619
35	Other Procurement Expense	cA*r28	0.00236	0.3162	0.4842
36	Research and Development Expense	cA*r28	0.00004	0.0048	0.0074
37	Other General and Admin Exp	cA*r28	0.01521	2.0386	3.1220
38	***Total Common Costs***	***Sum r31:r37***		6.0535	9.2704
39					
40	***TELRIC + Common***	***r28 + r38***		**140.07**	**214.51**

c = column, r = row, s = section, p = page

B. 3.1 Dev Total Prod Costs - Caged Collocation Space Construction

	Version 1.0 Created 7/12/01, 4:35:46 PM										
				3.1.6 Each Additional Power Feed Monthly Charge Adjustments							
Row	South Dakota	Source or Calculation	Factor Value (sF)	Space Monthly Charge Adjustment for Each Additional 20A Power Feed	Space Monthly Charge Adjustment for Each Additional 30A Power Feed	Space Monthly Charge Adjustment for Each Additional 40A Power Feed	Space Monthly Charge Adjustment for Each Additional 60A Power Feed	Space Monthly Charge Adjustment for Each Additional 100A Power Feed	Space Monthly Charge Adjustment for Each Additional 200A Power Feed	Space Monthly Charge Adjustment for Each Additional 300A Power Feed	Space Monthly Charge Adjustment for Each Additional 400A Power Feed
			A								
1	**Investment**	**sC p1-3 cE**									
2											
3	***Total Investment Based Costs***	**sC p1-3 cK**									
4	***Element Specific Expenses***	**sE p2 cC&D**		11.2833	12.4679	14.9640	25.0274	41.7881	79.1436	129.5183	185.0469
5	***Total IBC + Element Specific Expenses***	***r3 + r4***		11.2833	12.4679	14.9640	25.0274	41.7881	79.1436	129.5183	185.0469
6											
7	***Directly Assigned***										
8	Product Management Expense	cA*r5	0.02557	0.2885	0.3187	0.3826	0.6398	1.0683	2.0233	3.3112	4.7308
9	Sales Expense	cA*r5	0.00922	0.1041	0.1150	0.1380	0.2309	0.3855	0.7301	1.1948	1.7070
10	Product Advertising Expense	cA*r5	0.00000	0.0000	0.0000	0.0000	0.0000	0.0000	0.0000	0.0000	0.0000
11	Business Fees (Other Operating Taxes)	cA*(r5+r8:r10)	0.00203	0.0236	0.0261	0.0314	0.0524	0.0876	0.1659	0.2714	0.3878
12	***Directly Assigned Costs***	***Sum r8:r11***		0.4162	0.4599	0.5520	0.9231	1.5414	2.9192	4.7773	6.8255
13											
14	***Total Direct***	***r5 + r12***		11.6995	12.9278	15.5160	25.9505	43.3295	82.0628	134.2957	191.8724
15											
16	***Directly Attributed***										
17	Network Operations	cA*r14	0.04088	0.4783	0.5285	0.6343	1.0609	1.7713	3.3547	5.4900	7.8438
18	Network Support Assets	cA*r14	0.01536	0.1798	0.1986	0.2384	0.3987	0.6657	1.2608	2.0633	2.9479
19	General Support Assets	cA*r14	0.06951	0.8132	0.8986	1.0785	1.8038	3.0117	5.7040	9.3346	13.3366
20	General Purpose Computers	cA*r14	0.03471	0.4061	0.4488	0.5386	0.9008	1.5041	2.8487	4.6619	6.6606
21	Uncollectible - Interconnect	cA*r14	0.00040	0.0047	0.0052	0.0062	0.0104	0.0174	0.0329	0.0538	0.0769
22	Accounting and Finance Expense	cA*r14	0.00884	0.1034	0.1143	0.1371	0.2294	0.3830	0.7253	1.1870	1.6959
23	Human Resources Expense	cA*r14	0.00814	0.0953	0.1053	0.1264	0.2114	0.3529	0.6684	1.0938	1.5627
24	Information Management Expense	cA*r14	0.05701	0.6670	0.7370	0.8846	1.4794	2.4702	4.6784	7.6561	10.9385
25	Intangibles	cA*r14	0.00209	0.0245	0.0270	0.0324	0.0543	0.0906	0.1716	0.2808	0.4012
26	***Total Directly Attributed Costs***	***Sum r17:r25***		2.7722	3.0633	3.6765	6.1490	10.2669	19.4448	31.8214	45.4643
27											
28	***Total Element Long Run Incremental C***	***r 14 + r26***		14.4717	15.9911	19.1925	32.0995	53.5964	101.5076	166.1171	237.3366
29											
30	***Common***										
31	Executive Expense	cA*r28	0.00780	0.1130	0.1248	0.1498	0.2505	0.4183	0.7923	1.2965	1.8524
32	Planning Expense	cA*r28	0.00058	0.0084	0.0093	0.0111	0.0186	0.0311	0.0589	0.0964	0.1377
33	External Relations Expense	cA*r28	0.01303	0.1886	0.2083	0.2501	0.4182	0.6983	1.3225	2.1643	3.0923
34	Legal Expense	cA*r28	0.00615	0.0890	0.0983	0.1180	0.1974	0.3295	0.6241	1.0213	1.4592
35	Other Procurement Expense	cA*r28	0.00236	0.0341	0.0377	0.0453	0.0757	0.1265	0.2395	0.3919	0.5599
36	Research and Development Expense	cA*r28	0.00004	0.0005	0.0006	0.0007	0.0012	0.0019	0.0037	0.0060	0.0085
37	Other General and Admin Exp	cA*r28	0.01521	0.2201	0.2433	0.2919	0.4883	0.8153	1.5441	2.5269	3.6103
38	***Total Common Costs***	***Sum r31:r37***		0.6537	0.7223	0.8669	1.4499	2.4209	4.5850	7.5034	10.7203
39											
40	***TELRIC + Common***	***r28 + r38***		**15.13**	**16.71**	**20.06**	**33.55**	**56.02**	**106.09**	**173.62**	**248.06**

c = column, r = row, s = section, p = page

South Dakota Public Utilities Commission
Docket No. TC 01_____
Qwest Corporation

Attachment 2

Study No. 5336
Collocation

B. 3.2-3.4 Dev Total Prod Costs - Caged Collocation

	Version 1.0 Created 7/12/01, 4:35:46 PM			3.2 Grounding											
				Grounding - 90 Day Installation						Grounding - Monthly Charge					
Row	South Dakota	Source or Calculation	Factor Value (sF)	#2 AWG per Foot - 90 Day	1/0 AWG per Foot - 90 Day	4/0 AWG per Foot - 90 Day	350 KCMIL per Foot - 90 Day	500 KCMIL per Foot - 90 Day	750 KCMIL per Foot - 90 Day	#2 AWG per Foot Monthly Charge	1/0 AWG per Foot Monthly Charge	4/0 AWG per Foot Monthly Charge	350 KCMIL per Foot Monthly Charge	500 KCMIL per Foot Monthly Charge	750 KCMIL per Foot Monthly Charge
			A												
1	**Investment**	**sC p1-3 cE**													
2															
3	***Total Investment Based Costs***	**sC p1-3 cK**													
4	***Element Specific Expenses***	**sE p2 cC&D**		8.0562	13.7882	15.8813	21.3979	24.2254	41.8811	0.0199	0.0341	0.0392	0.0529	0.0598	0.1035
5	***Total IBC + Element Specific Expenses***	***r3 + r4***		8.0562	13.7882	15.8813	21.3979	24.2254	41.8811	0.0199	0.0341	0.0392	0.0529	0.0598	0.1035
6															
7	***Directly Assigned***														
8	Product Management Expense	cA*r5	0.02557	0.2060	0.3525	0.4060	0.5470	0.6193	1.0707	0.0005	0.0009	0.0010	0.0014	0.0015	0.0026
9	Sales Expense	cA*r5	0.00922	0.0743	0.1272	0.1465	0.1974	0.2235	0.3863	0.0002	0.0003	0.0004	0.0005	0.0006	0.0010
10	Product Advertising Expense	cA*r5	0.00000	0.0000	0.0000	0.0000	0.0000	0.0000	0.0000	0.0000	0.0000	0.0000	0.0000	0.0000	0.0000
11	Business Fees (Other Operating Taxes)	cA*(r5+r8:r10)	0.00203	0.0169	0.0289	0.0333	0.0448	0.0508	0.0878	0.0000	0.0001	0.0001	0.0001	0.0001	0.0002
12	***Directly Assigned Costs***	***Sum r8:r11***		0.2972	0.5086	0.5858	0.7893	0.8936	1.5448	0.0007	0.0013	0.0014	0.0019	0.0022	0.0038
13															
14	***Total Direct***	***r5 + r12***		8.3533	14.2968	16.4671	22.1872	25.1190	43.4259	0.0206	0.0353	0.0407	0.0548	0.0620	0.1073
15															
16	***Directly Attributed***														
17	Network Operations	cA*r14	0.04088	0.3415	0.5845	0.6732	0.9070	1.0269	1.7753	0.0008	0.0014	0.0017	0.0022	0.0025	0.0044
18	Network Support Assets	cA*r14	0.01536	0.1283	0.2197	0.2530	0.3409	0.3859	0.6672	0.0003	0.0005	0.0006	0.0008	0.0010	0.0016
19	General Support Assets	cA*r14	0.06951	0.5806	0.9937	1.1446	1.5422	1.7460	3.0184	0.0014	0.0025	0.0028	0.0038	0.0043	0.0075
20	General Purpose Computers	cA*r14	0.03471	0.2900	0.4963	0.5716	0.7702	0.8720	1.5075	0.0007	0.0012	0.0014	0.0019	0.0022	0.0037
21	Uncollectible - Interconnect	cA*r14	0.00040	0.0033	0.0057	0.0066	0.0089	0.0101	0.0174	0.0000	0.0000	0.0000	0.0000	0.0000	0.0000
22	Accounting and Finance Expense	cA*r14	0.00884	0.0738	0.1264	0.1455	0.1961	0.2220	0.3838	0.0002	0.0003	0.0004	0.0005	0.0005	0.0009
23	Human Resources Expense	cA*r14	0.00814	0.0680	0.1164	0.1341	0.1807	0.2046	0.3537	0.0002	0.0003	0.0003	0.0004	0.0005	0.0009
24	Information Management Expense	cA*r14	0.05701	0.4762	0.8151	0.9388	1.2649	1.4320	2.4757	0.0012	0.0020	0.0023	0.0031	0.0035	0.0061
25	Intangibles	cA*r14	0.00209	0.0175	0.0299	0.0344	0.0464	0.0525	0.0908	0.0000	0.0001	0.0001	0.0001	0.0001	0.0002
26	***Total Directly Attributed Costs***	***Sum r17:r25***		1.9793	3.3876	3.9019	5.2573	5.9520	10.2898	0.0049	0.0084	0.0096	0.0130	0.0147	0.0254
27															
28	***Total Element Long Run Incremental Co***	***r14 + r26***		10.3327	17.6844	20.3689	27.4445	31.0709	53.7156	0.0255	0.0437	0.0503	0.0678	0.0768	0.1327
29															
30	***Common***														
31	Executive Expense	cA*r28	0.00780	0.0806	0.1380	0.1590	0.2142	0.2425	0.4192	0.0002	0.0003	0.0004	0.0005	0.0006	0.0010
32	Planning Expense	cA*r28	0.00058	0.0060	0.0103	0.0118	0.0159	0.0180	0.0312	0.0000	0.0000	0.0000	0.0000	0.0000	0.0001
33	External Relations Expense	cA*r28	0.01303	0.1346	0.2304	0.2654	0.3576	0.4048	0.6999	0.0003	0.0006	0.0007	0.0009	0.0010	0.0017
34	Legal Expense	cA*r28	0.00615	0.0635	0.1087	0.1252	0.1687	0.1910	0.3303	0.0002	0.0003	0.0003	0.0004	0.0005	0.0008
35	Other Procurement Expense	cA*r28	0.00236	0.0244	0.0417	0.0481	0.0647	0.0733	0.1267	0.0001	0.0001	0.0001	0.0002	0.0002	0.0003
36	Research and Development Expense	cA*r28	0.00004	0.0004	0.0006	0.0007	0.0010	0.0011	0.0019	0.0000	0.0000	0.0000	0.0000	0.0000	0.0000
37	Other General and Admin Exp	cA*r28	0.01521	0.1572	0.2690	0.3098	0.4175	0.4726	0.8171	0.0004	0.0007	0.0008	0.0010	0.0012	0.0020
38	***Total Common Costs***	***Sum r31:r37***		0.4667	0.7988	0.9200	1.2396	1.4035	2.4263	0.0012	0.0020	0.0023	0.0031	0.0035	0.0060
39															
40	***TELRIC + Common***	***r28 + r38***		**10.80**	**18.48**	**21.29**	**28.68**	**32.47**	**56.14**	**0.0267**	**0.0457**	**0.0526**	**0.0709**	**0.0802**	**0.1387**

c = column, r = row, s = section, p = page

B. 3.2-3.4 Dev Total Prod Costs - Caged Collocation

	Version 1.0 Created 7/12/01, 4:35:46 PM				
				3.3 Rent	3.4 Quote Preparation Fee - Caged Construction
Row	South Dakota	Source or Calculation	Factor Value (sF)	Rent per Square Foot	Quotation Preparation Fee - Caged Construction
			A		
1	**Investment**	**sC p1-3 cE**		170.44	
2					
3	***Total Investment Based Costs***	**sC p1-3 cK**		2.2745	
4	***Element Specific Expenses***	**sE p2 cC&D**			3451.33
5	***Total IBC + Element Specific Expenses***	***r3 + r4***		2.2745	3451.33
6					
7	***Directly Assigned***				
8	Product Management Expense	cA*r5	0.02557	0.0581	88.23
9	Sales Expense	cA*r5	0.00922	0.0210	31.84
10	Product Advertising Expense	cA*r5	0.00000	0.0000	0.00
11	Business Fees (Other Operating Taxes)	cA*(r5+r8:r10)	0.00203	0.0048	7.23
12	***Directly Assigned Costs***	***Sum r8:r11***		0.0839	127.30
13					
14	***Total Direct***	***r5 + r12***		2.3584	3578.63
15					
16	***Directly Attributed***				
17	Network Operations	cA*r14	0.04088	0.0964	146.29
18	Network Support Assets	cA*r14	0.01536	0.0362	54.98
19	General Support Assets	cA*r14	0.06951	0.1639	248.74
20	General Purpose Computers	cA*r14	0.03471	0.0819	124.23
21	Uncollectible - Interconnect	cA*r14	0.00040	0.0009	1.43
22	Accounting and Finance Expense	cA*r14	0.00884	0.0208	31.63
23	Human Resources Expense	cA*r14	0.00814	0.0192	29.15
24	Information Management Expense	cA*r14	0.05701	0.1345	204.02
25	Intangibles	cA*r14	0.00209	0.0049	7.48
26	***Total Directly Attributed Costs***	***Sum r17:r25***		0.5588	847.96
27					
28	***Total Element Long Run Incremental Co***	***r14 + r26***		2.9172	4426.59
29					
30	***Common***				
31	Executive Expense	cA*r28	0.00780	0.0228	34.55
32	Planning Expense	cA*r28	0.00058	0.0017	2.57
33	External Relations Expense	cA*r28	0.01303	0.0380	57.67
34	Legal Expense	cA*r28	0.00615	0.0179	27.22
35	Other Procurement Expense	cA*r28	0.00236	0.0069	10.44
36	Research and Development Expense	cA*r28	0.00004	0.0001	0.16
37	Other General and Admin Exp	cA*r28	0.01521	0.0444	67.34
38	***Total Common Costs***	***Sum r31:r37***		0.1318	199.95
39					
40	***TELRIC + Common***	***r28 + r38***		**3.0490**	**4626.54**

c = column, r = row, s = section, p = page

B. 4 Dev Total Prod Costs - Virtual Collocation

	Version 1.0 Created 7/12/01, 4:35:46 PM													
				4.1 Equipment Bay	4.2 Labor									4.3 Quote Preparation Fee - Virtual
Row	South Dakota	Source or Calculation	Factor Value (sF)	Equipment Bay per Shelf	Maintenance - Regular Business Hours Per 1/2 Hour	Maintenance - Outside Regular Business Hours Per 1/2 Hour	Training - Regular Business Hours Per 1/2 Hour	Inspector - Regular Business Hours Per 1/2 Hour	Inspector - Outside Regular Business Hours Per 1/2 Hour	Installation - Regular Business Hours Per 1/2 Hour	Installation - Outside Regular Business Hours Per 1/2 Hour	Engineering - Regular Business Hours Per 1/2 Hour	Engineering - Outside Regular Business Hours Per 1/2 Hour	Quotation Preparation Fee - Virtual
			A											
1	**Investment**	**sC p1-3 cE**		164.77										
2														
3	***Total Investment Based Costs***	**sC p1-3 cK**		2.8982										
4	***Element Specific Expenses***	**sE p79 cB&C & p73**			20.2700	27.1231	20.2700	23.1100	29.7591	23.1100	29.7591	21.8700	28.2314	3174.25
5	***Total IBC + Element Specific Expenses***	***r3 + r4***		2.8982	20.2700	27.1231	20.2700	23.1100	29.7591	23.1100	29.7591	21.8700	28.2314	3174.25
6														
7	***Directly Assigned***													
8	Product Management Expense	cA*r5	0.02557	0.0741	0.5182	0.6934	0.5182	0.5908	0.7608	0.5908	0.7608	0.5591	0.7217	81.15
9	Sales Expense	cA*r5	0.00922	0.0267	0.1870	0.2502	0.1870	0.2132	0.2745	0.2132	0.2745	0.2017	0.2604	29.28
10	Product Advertising Expense	cA*r5	0.00000	0.0000	0.0000	0.0000	0.0000	0.0000	0.0000	0.0000	0.0000	0.0000	0.0000	0.00
11	Business Fees (Other Operating Taxes)	cA*(r5+r8:r10)	0.00203	0.0061	0.0425	0.0568	0.0425	0.0484	0.0624	0.0484	0.0624	0.0458	0.0592	6.65
12	***Directly Assigned Costs***	***Sum r8:r11***		0.1069	0.7477	1.0004	0.7477	0.8524	1.0977	0.8524	1.0977	0.8067	1.0413	117.08
13														
14	***Total Direct***	***r5 + r12***		3.0051	21.0177	28.1235	21.0177	23.9624	30.8568	23.9624	30.8568	22.6767	29.2727	3291.33
15														
16	***Directly Attributed***													
17	Network Operations	cA*r14	0.04088	0.1228	0.8592	1.1497	0.8592	0.9796	1.2614	0.9796	1.2614	0.9270	1.1967	134.55
18	Network Support Assets	cA*r14	0.01536	0.0462	0.3229	0.4321	0.3229	0.3682	0.4741	0.3682	0.4741	0.3484	0.4497	50.57
19	General Support Assets	cA*r14	0.06951	0.2089	1.4609	1.9548	1.4609	1.6656	2.1448	1.6656	2.1448	1.5762	2.0347	228.77
20	General Purpose Computers	cA*r14	0.03471	0.1043	0.7296	0.9763	0.7296	0.8318	1.0712	0.8318	1.0712	0.7872	1.0162	114.26
21	Uncollectible - Interconnect	cA*r14	0.00040	0.0012	0.0084	0.0113	0.0084	0.0096	0.0124	0.0096	0.0124	0.0091	0.0117	1.32
22	Accounting and Finance Expense	cA*r14	0.00884	0.0266	0.1858	0.2486	0.1858	0.2118	0.2727	0.2118	0.2727	0.2004	0.2587	29.09
23	Human Resources Expense	cA*r14	0.00814	0.0245	0.1712	0.2291	0.1712	0.1952	0.2513	0.1952	0.2513	0.1847	0.2384	26.81
24	Information Management Expense	cA*r14	0.05701	0.1713	1.1982	1.6033	1.1982	1.3661	1.7591	1.3661	1.7591	1.2928	1.6688	187.64
25	Intangibles	cA*r14	0.00209	0.0063	0.0440	0.0588	0.0440	0.0501	0.0645	0.0501	0.0645	0.0474	0.0612	6.88
26	***Total Directly Attributed Costs***	***Sum r17:r25***		0.7120	4.9801	6.6639	4.9801	5.6779	7.3115	5.6779	7.3115	5.3733	6.9362	779.88
27														
28	***Total Element Long Run Incremental Co***	***r 14 + r26***		3.7171	25.9978	34.7874	25.9978	29.6403	38.1683	29.6403	38.1683	28.0499	36.2089	4071.21
29														
30	***Common***													
31	Executive Expense	cA*r28	0.00780	0.0290	0.2029	0.2715	0.2029	0.2313	0.2979	0.2313	0.2979	0.2189	0.2826	31.78
32	Planning Expense	cA*r28	0.00058	0.0022	0.0151	0.0202	0.0151	0.0172	0.0221	0.0172	0.0221	0.0163	0.0210	2.36
33	External Relations Expense	cA*r28	0.01303	0.0484	0.3387	0.4532	0.3387	0.3862	0.4973	0.3862	0.4973	0.3655	0.4718	53.04
34	Legal Expense	cA*r28	0.00615	0.0229	0.1598	0.2139	0.1598	0.1822	0.2347	0.1822	0.2347	0.1725	0.2226	25.03
35	Other Procurement Expense	cA*r28	0.00236	0.0088	0.0613	0.0821	0.0613	0.0699	0.0901	0.0699	0.0901	0.0662	0.0854	9.61
36	Research and Development Expense	cA*r28	0.00004	0.0001	0.0009	0.0013	0.0009	0.0011	0.0014	0.0011	0.0014	0.0010	0.0013	0.15
37	Other General and Admin Exp	cA*r28	0.01521	0.0565	0.3955	0.5292	0.3955	0.4509	0.5806	0.4509	0.5806	0.4267	0.5508	61.93
38	***Total Common Costs***	***Sum r31:r37***		0.1679	1.1743	1.5713	1.1743	1.3388	1.7240	1.3388	1.7240	1.2670	1.6355	183.89
39														
40	***TELRIC + Common***	***r28 + r38***		**3.8850**	**27.1721**	**36.3587**	**27.1721**	**30.9792**	**39.8924**	**30.9792**	**39.8924**	**29.3169**	**37.8444**	**4255.11**

c = column, r = row, s = section, p = page

	A	B	C	D	E	F	G	H	I	J	K
1	Version 1.0 Created 7/12/01 4:35:46 PM										
2	South Dakota										
3	Acct	FRC	Account Name	Source of Investment	Investment	Depreciation cE*(sG p1 cA)	Cost of Money cE*(sG p1 cB)	Income Tax cE*(sG p1 cC)	Ad Valorem cE*(sG p1 cE)	Maintenance cE*(sG p1 cF)	Total Investment Based Costs sum(cF:cJ)
4											
5	**1.2 Entrance Facility**										
6	**Standard Shared Entrance Facility**										
7	2111	20C	Land	*	0.024227	0.0000000	0.0001948	0.0000737	0.0000174	0.0000451	0.000331
8	2121	110C	Building	**	0.927537	0.0019958	0.0057870	0.0021884	0.0006657	0.0017278	0.012365
9	2441	4C	Conduit	sE p3 D7	364.169221	0.6507407	1.9604486	0.7413705	0.2613733	0.1686758	3.782609
10	2232.2	257C	Other Digital Equipment	sE p3 D9	17.3047857	0.1582196	0.0655484	0.0247880	0.0124201	0.0170455	0.278022
11			Total		382.4257697	0.8109561	2.0319789	0.7684206	0.2744765	0.1874943	4.0733263
12	**Cross Connect Entrance Facility**										
13	2111	20C	Land	*	0.024227	0.0000000	0.0001948	0.0000737	0.0000174	0.0000451	0.000331
14	2121	110C	Building	**	0.927537	0.0019958	0.0057870	0.0021884	0.0006657	0.0017278	0.012365
15	2441	4C	Conduit	sE p3 D12	364.169221	0.6507407	1.9604486	0.7413705	0.2613733	0.1686758	3.782609
16	2232.2	257C	Other Digital Equipment	sE p3 D14	17.3047857	0.1582196	0.0655484	0.0247880	0.0124201	0.0170455	0.278022
17			Total		382.4257697	0.8109561	2.0319789	0.7684206	0.2744765	0.1874943	4.0733263
18	**Express Entrance Facility**										
19	2111	20C	Land	*	0.436081	0.0000000	0.0035071	0.0013262	0.0003130	0.0008123	0.005959
20	2121	110C	Building	**	16.695657	0.0359247	0.1041655	0.0393916	0.0119829	0.0311005	0.222565
21	2441	4C	Conduit	sE p3 D17	6366.436936	11.3763036	34.2727280	12.9607006	4.5693502	2.9488045	66.127887
22	2232.2	257C	Other Digital Equipment	sE p3 D18	311.486143	2.8479532	1.1798716	0.4461846	0.2235614	0.3068193	5.004390
23			Total		6695.0548162	14.2601815	35.5602722	13.4476031	4.8052074	3.2875366	71.3608008

	A	B	C	D	E	F	G	H	I	J	K
1	Version 1.0 Created 7/12/01 4:35:46 PM										
2	South Dakota										
3	Acct	FRC	Account Name	Source of Investment	Investment	Depreciation cE*(sG p1 cA)	Cost of Money cE*(sG p1 cB)	Income Tax cE*(sG p1 cC)	Ad Valorem cE*(sG p1 cE)	Maintenance cE*(sG p1 cF)	Total Investment Based Costs sum(cF:cJ)
4											
24	**1.4.1 AC Power**										
25	**Power Plant per Amp Ordered Less than 60 AMPS**										
26	2111	20C	Land	*	0.739043	0.000000	0.005944	0.002248	0.000530	0.001377	0.010098
27	2121	110C	Building	**	28.294801	0.060883	0.176534	0.066759	0.020308	0.052707	0.377190
28	2232.3	357C	Other Digital Equipment	sE p4 C4	527.888074	4.826541	1.999576	0.756167	0.378878	1.447217	9.408379
29			Total		556.921918	4.887424	2.182053	0.825173	0.399717	1.501301	9.795667
30	**Power Plant per Amp Ordered Equal to or Greater than 60 Amps**										
31	2111	20C	Land	*	0.488911	0.000000	0.003932	0.001487	0.000351	0.000911	0.006680
32	2121	110C	Building	**	18.718296	0.040277	0.116785	0.044164	0.013435	0.034868	0.249528
33	2232.3	357C	Other Digital Equipment	sE p4 C5	349.221934	3.192976	1.322810	0.500239	0.250645	0.957400	6.224070
34			Total		368.429141	3.233253	1.443527	0.545889	0.264431	0.993179	6.480279
35	**1.4.2 Backup AC Power Feed Usage - Monthly Charges**										
36	**Backup AC Power - Per Amp 120 V**										
37	2111	20C	Land	*	0.420516	0.0000000	0.0033819	0.0012789	0.0003018	0.0007833	0.005746
38	2121	110C	Building	**	16.099737	0.0346424	0.1004476	0.0379856	0.0115552	0.0299904	0.214621
39	2232.3	357C	Other Digital Equipment	sE p4 C10	300.3682320	2.7463008	1.1377583	0.4302589	0.2155818	0.8234663	5.353366
40			Total		316.8884847	2.7809433	1.2415877	0.4695234	0.2274388	0.8542401	5.5737332
41	**Backup AC Power - Per Amp 208 V, Single Phase**										
42	2111	20C	Land	*	0.728894	0.0000000	0.0058619	0.0022168	0.0005231	0.0013578	0.009960
43	2121	110C	Building	**	27.906211	0.0600469	0.1741091	0.0658417	0.0200290	0.0519834	0.372010
44	2232.3	357C	Other Digital Equipment	sE p4 C11	520.6382688	4.7602548	1.9721144	0.7457820	0.3736750	1.4273417	9.279168
45			Total		549.2733736	4.8203017	2.1520854	0.8138405	0.3942272	1.4806828	9.6611376
46	**Backup AC Power - Per Amp 208 V, Three Phase**										
47	2111	20C	Land	*	1.260986	0.0000000	0.0101411	0.0038350	0.0009050	0.0023489	0.017230
48	2121	110C	Building	**	48.277745	0.1038811	0.3012087	0.1139062	0.0346501	0.0899312	0.643577
49	2232.3	357C	Other Digital Equipment	sE p4 C12	900.7042050	8.2352408	3.4117579	1.2902029	0.6464578	2.4693011	16.052961
50			Total		950.2429362	8.3391219	3.7231078	1.4079441	0.6820130	2.5615812	16.7137680
51	**Backup AC Power - Per Amp 240 V, Single Phase**										
52	2111	20C	Land	*	0.841031	0.0000000	0.0067637	0.0025578	0.0006036	0.0015667	0.011492
53	2121	110C	Building	**	32.199474	0.0692848	0.2008951	0.0759712	0.0231104	0.0599808	0.429242
54	2232.3	357C	Other Digital Equipment	sE p4 C13	600.7364640	5.4926017	2.2755166	0.8605177	0.4311635	1.6469327	10.706732
55			Total		633.7769695	5.5618865	2.4831755	0.9390468	0.4548775	1.7084802	11.1474664
56	**Backup AC Power - Per Amp 240 V, Three Phase**										
57	2111	20C	Land	*	1.454984	0.0000000	0.0117013	0.0044250	0.0010443	0.0027103	0.019881
58	2121	110C	Building	**	55.705091	0.1198628	0.3475485	0.1314302	0.0399809	0.1037668	0.742589
59	2232.3	357C	Other Digital Equipment	sE p4 C14	1039.2740827	9.5022009	3.9366438	1.4886957	0.7459129	2.8491936	18.522647
60			Total		1096.4341572	9.6220637	4.2958936	1.6245509	0.7869381	2.9556707	19.2851169
61	**Backup AC Power - Per Amp 480 V, Three Phase**										
62	2111	20C	Land	*	2.909967	0.0000000	0.0234026	0.0088500	0.0020886	0.0054207	0.039762
63	2121	110C	Building	**	111.410182	0.2397255	0.6950971	0.2628605	0.0799619	0.2075336	1.485179
64	2232.3	357C	Other Digital Equipment	sE p4 C15	2078.5481653	19.0044018	7.8732875	2.9773913	1.4918257	5.6983871	37.045294
65			Total		2192.8683144	19.2441274	8.5917872	3.2491018	1.5738762	5.9113413	38.5702338

	A	B	C	D	E	F	G	H	I	J	K
1	Version 1.0 Created 7/12/01, 4:35:46 PM										
2	South Dakota										
3	Acct	FRC	Account Name	Source of Investment	Investment	Depreciation cE*(sG p1 cA)	Cost of Money cE*(sG p1 cB)	Income Tax cE*(sG p1 cC)	Ad Valorem cE*(sG p1 cE)	Maintenance cE*(sG p1 cF)	Total Investment Based Costs sum(cF:cJ)
4											
66	**1.5 Security**										
67	**Access Card per Employee**										
68	2111	20C	Land	*	0.0000000	0.0000000	0.0000000	0.0000000	0.0000000	0.0000000	0.000000
69	2121	110C	Building	**	0.0000000	0.0000000	0.0000000	0.0000000	0.0000000	0.0000000	0.000000
70	2124	361C	Office Equipment	sE p4 C17	9.5669842	0.1314261	0.0379652	0.0143571	0.0068665	0.0000000	0.190615
71			Total		9.5669842	0.1314261	0.0379652	0.0143571	0.0068665	0.0000000	0.1906148
72	**Card Access Per Person per Office per Month**										
73	2111	20C	Land	*	0.0000000	0.0000000	0.0000000	0.0000000	0.0000000	0.0000000	0.000000
74	2121	110C	Building	**	0.0000000	0.0000000	0.0000000	0.0000000	0.0000000	0.0000000	0.000000
75	2124	361C	Office Equipment	sE p4 C19	250.0000000	3.4343671	0.9920887	0.3751719	0.1794312	0.0000000	4.981059
76			Total		250.0000000	3.4343671	0.9920887	0.3751719	0.1794312	0.0000000	4.9810589
77	**1.6 Composite Clock**										
78	**Central Office Synchronization - Composite Clock, per Port**										
79	2111	20C	Land	*	0.425159	0.000000	0.003419	0.001293	0.000305	0.000792	0.005809
80	2121	110C	Building	**	16.277516	0.035025	0.101557	0.038405	0.011683	0.030322	0.216991
81	2232.3	357C	Other Digital Equipment	sE p4 C21	303.685000	2.776626	1.150322	0.435010	0.217962	0.832559	5.412480
82			Total		320.387675	2.811651	1.255298	0.474708	0.229950	0.863673	5.635280

C. Investment Cost Calculation

	A	B	C	D	E	F	G	H	I	J	K
1	Version 1.0 Created 7/12/01, 4:35:46 PM										
2	South Dakota										
3	Acct	FRC	Account Name	Source of Investment	Investment	Depreciation cE*(sG p1 cA)	Cost of Money cE*(sG p1 cB)	Income Tax cE*(sG p1 cC)	Ad Valorem cE*(sG p1 cE)	Maintenance cE*(sG p1 cF)	Total Investment Based Costs sum(cF:cJ)
4											
83	**1.7 Interconnection Tie Pair**										
84	**DS0 Per Connection**										
85	2111	20C	Land	*	0.027855	0.0000000	0.0002240	0.0000847	0.0000200	0.0000519	0.000381
86	2121	110C	Building	**	1.068440	0.0022990	0.0066661	0.0025209	0.0007668	0.0019903	0.014243
87	2232.3	377C	Digital Switch	sE p4 C23	19.8964533	0.1805773	0.0753492	0.0284943	0.0142802	0.0347174	0.333418
88			Total		20.9927479	0.1828764	0.0822393	0.0310999	0.0150670	0.0367596	0.3480421
89	**DS1 Per Connection**										
90	2111	20C	Land	*	0.090965	0.0000000	0.0007316	0.0002766	0.0000653	0.0001694	0.001243
91	2121	110C	Building	**	3.482670	0.0074938	0.0217287	0.0082170	0.0024996	0.0064875	0.046427
92	2232.3	357C	Other Digital Equipment	sE p4 C24	64.9751913	0.5940756	0.2461181	0.0930729	0.0466343	0.1781310	1.158032
93			Total		68.5488268	0.6015693	0.2685783	0.1015666	0.0491992	0.1847879	1.2057013
94	**DS3 Per Connection**										
95	2111	20C	Land	*	0.917488	0.0000000	0.0073786	0.0027903	0.0006585	0.0017091	0.012537
96	2121	110C	Building	**	35.126695	0.0755834	0.2191583	0.0828777	0.0252113	0.0654336	0.468264
97	2232.3	357C	Other Digital Equipment	sE p4 C25	655.3487954	5.9919284	2.4823815	0.9387465	0.4703601	1.7966536	11.680070
98			Total		691.3929791	6.0675119	2.7089184	1.0244145	0.4962299	1.8637963	12.1608711
99	**2.2 & 3.3 Space Rental**										
100	2111	20C	Land	sE p4 C27	7.2000000	0.0000000	0.0579039	0.0218971	0.0051676	0.0134121	0.098381
101	2121	110C	Building	sE p4 C28	163.2410650	0.3512520	1.0184741	0.3851499	0.1171622	0.3040836	2.176122
102			Total		170.4410650	0.3512520	1.0763780	0.4070471	0.1223298	0.3174956	2.2745025
103	**4.1 Equipment Bay**										
104	2111	20C	Land	*	0.218654	0.0000000	0.0017585	0.0006650	0.0001569	0.0004073	0.002988
105	2121	110C	Building	**	8.371328	0.0180129	0.0522294	0.0197513	0.0060083	0.0155940	0.111596
106	2232.3	357C	Office Equipment	sE p78 C16	156.1814902	1.4279851	0.5915965	0.2237203	0.1120953	0.4281751	2.783572
107			Total		164.7714722	1.4459980	0.6455843	0.2441365	0.1182606	0.4441764	2.8981559
108	c = column, r = row, s = section, p = page										
109	* Land= (sH p1 D10) * 377C + (sH p1 E10) * (57C+257C+357C+357CS)										
110	** Building = (sH p1 B10) * 377C + (sH p1 C10) * (57C+257C+357C+357CS)										

	A	B	C	D
1	Version 1.0 Created 7/12/01, 4:35:46 PM			
2	South Dakota			
3	**General Inputs**			
4				
5		**Default Value**	**Overrides (sl)**	**This Run**
6	**1 Standard Collocation**			
7	Number of Bays in Standard Configuration	2		2
8	Number of Bays Cable Racking is Spread Over	3		3
9	Number of Bays Miscellaneous Items are Spread Over	3		3
10	Number of Bays Other Shared Items are Spread Over	3		3
11	Number of DS0 Terminations	100		100
12	Number of DS1 Terminations	28		28
13	Number of DS3 Terminations	1		1
14	% of Blocks that are 410 Blocks	90%		90%
15	Apply Sales Tax to Contract Labor: 1=Yes, 0=No	1		1
16	Shipping Rate	14%		14%
17				
18				
19	**2 Cageless Collocation**			
20	Number of Cageless Collocators per office	3		3
21	% of Jobs that Require Major Aerial Support	50%		50%
22	% of Jobs Requiring Any Aerial Support	85%		85%
23	% of Jobs Requiring Major Cable Racking	50%		50%
24	% of Jobs Requiring Both Major Aerial and Major Cable Racking	73%		73%
25	% of Jobs Requiring some Cable Racking	88%		88%
26				
27				
28	**3 Caged Collocation**			
29	Number of Caged Collocators per office	3		3
30	% of Jobs that Require Major Aerial Support	100%		100%
31	% of Jobs Requiring Any Aerial Support	85%		85%
32	% of Jobs Requiring Major Cable Racking	100%		100%
33	% of Jobs Requiring Both Major Aerial and Major Cable Racking	73%		73%
34	% of Jobs Requiring some Cable Racking	88%		88%
35				
36				
37	**Quotation Preparation Fees**			
38	2.3 Quotation Preparation Fee - Cageless	$ 3,174.25		$ 3,174.25
39	3.4 Quotation Preparation Fee - Caged	$ 3,451.33		$ 3,451.33
40	4.3 Quotation Preparation Fee - Virtual	$ 3,174.25		$ 3,174.25
41				
42				
43				
44				
45				
46				
47				
48				
49				
50				
51				

	F	G	H	I
1	Version 1.0 Created 7/12/01, 4:35:46 PM			
2	South Dakota			
3	**1.1 Terminations**			
4				
5		Default Value	Overrides (sl)	This Run
6	**410 Blocks**			
7	Number of 410 Blocks	0.9		0.9
8	Expense per 410 Block	$ 376.00		$ 376.00
9	45 Day Labor Expense per 410 Block	$ 229.85		$ 229.85
10	90 Day Labor Expense per 410 Block	$ 182.89		$ 182.89
11				
12	**89 Blocks**			
13	Number of 89 Blocks	0.1		0.1
14	Expense per 89 Block	$ 85.46		$ 85.46
15	45 Day Labor Expense per 89 Block	$ 229.85		$ 229.85
16	90 Day Labor Expense per 89 Block	$ 182.85		$ 182.85
17				
18	**DS1 Panel (56 ckts)**			
19	Number of DS1 Panels	1		1
20	Expense per DS1 Panel	$ 524.25		$ 524.25
21	45 Day Labor Expense per DS1 Panel	$ 158.19		$ 158.19
22	90 Day Labor Expense per DS1 Panel	$ 125.16		$ 125.16
23				
24	**DS3 Connectors**			
25	Number of DS3 Connectors	2		2
26	Expense per DS3 Connector	$ 9.07		$ 9.07
27	45 Day Labor Expense per DS3 Connector	$ 9.45		$ 9.45
28	90 Day Labor Expense per DS3 Connector	$ 6.38		$ 6.38
29				
30	**DS0 Cable**			
31	Number of DS0 Cable Feet	156.05		156.05
32	Expense per DS0 Cable Foot	$ 1.45		$ 1.45
33	Number of DS0 Cable Terminations	100.00		100.00
34	45 Day Labor Expense per DS0 Cable foot	$ 1.45		$ 1.45
35	90 Day Labor Expense per DS0 Cable foot	$ 1.13		$ 1.13
36				
37	**DS1 Placement**			
38	Number of DS1 Cable Feet	115.47		115.47
39	Expense per DS1 Cable Foot	$ 1.13		$ 1.13
40	Number of DS1 Cable Terminations	28.00		28.00
41	45 Day Labor Expense per DS1 Cable foot	$ 1.66		$ 1.66
42	90 Day Labor Expense per DS1 Cable foot	$ 1.27		$ 1.27
43				
44	**DS3 Placement**			
45	Number of DS3 Cable Feet	94.77		94.77
46	Expense per DS3 Cable Foot	$ 0.89		$ 0.89
47	Number of DS3 Cable Terminations	1.00		1.00
48	45 Day Labor Expense per DS3 Cable foot	$ 0.84		$ 0.84
49	90 Day Labor Expense per DS3 Cable foot	$ 0.63		$ 0.63
50				
51				

	K	L	M	N
1	Version 1.0 Created 7/12/01, 4:35:46 PM			
2	South Dakota			
3	**1.2 Entrance Enclosure (Standard Shared, Cross Connect, & Express)**			
4				
5		Default Value	Overrides (sl)	This Run
6				
7	Underground Fiber Cable Per Ft	$1.04		$1.04
8	Utility Hole	$6,487.54		$6,487.54
9	Cut & Replace Road Covering - Utility Hole	$1,977.60		$1,977.60
10	Cut & Replace Concrete Per Trench Ft. - Conduit	$12.36		$12.36
11	Backfill Utility Hole	$816.60		$816.60
12	Backfill Conduit Trench Per Trench Ft.	$5.21		$5.21
13	Conduit Per Ft.	$21.63		$21.63
14	Pumping Utility Hole	$499.96		$499.96
15	Pulling Fiber into Conduit Per Ft.	$1.36		$1.36
16	Innerduct Per Ft.	$2.66		$2.66
17	Fiber Cable Per Ft	$1.16		$1.16
18	Cable Rack Per Ft	$181.45		$181.45
19	Fiber Cable Splicing - Per Setup	$366.99		$366.99
20	Fiber Cable Splicing - Per Fiber Spliced	$16.32		$16.32
21	Fiber Distribution Panel	$1,394.72		$1,394.72
22	Single Fiber Jumper	$125.00		$125.00
23	Attenuator Per Fiber	$0.00		$0.00
24	Core Drill	$112.00		$112.00
25	Placing Fiber Cable on Cable Racking Per Ft	$2.39		$2.39
26	Distance from Manhole '0' to Cable Vault	108		108
27	Distance between Manhole 1 and Manhole '0'	302		302
28	Weighting of use of POI	10%		10%
29	Weighting of use of Existing Manhole = (1-%POI)	90%		90%
30				
31				
32				
33				
34				
35				
36				
37				
38				
39				
40				
41				
42				
43				
44				
45				
46				
47				
48				
49				
50				
51				

	P	Q	R	S	T
1	Version 1.0 Created 7/12/01, 4:35:46 PM				
2	South Dakota				
3	**1.2 Entrance Enclosure**				
4					
5		**Default Value**	**Overrides (sl)**	**This Run**	
6	**Shared Entrance Enclosure**				
7	Distance from POI to Qwest Manhole '0' (feet)	50		50	
8	Fibers required per Collocator	18		18	
9	Collocators per Utility Hole/Conduit/CO	3		3	
10	Core Drills per manhole	2		2	
11	Number of Fiber Splice Setup	2		2	
12	Number of fibers spliced per CLEC	18		18	
13	Distance for New Cable Racking	20		20	
14	Distance Shared Cable Racking	130		130	
15					
16	**Cross Connect Entrance Enclosure**				
17	Distance from POI to Qwest Manhole '0' (feet)	50		50	
18	Fibers required per Collocator	18		18	
19	Collocators per Utility Hole/Conduit/CO	3		3	
20	Core Drills per central office	2		2	
21	Number of Fiber Splice Setup	2		2	
22	Number of fibers spliced per CLEC	18		18	
23	Number of Fiber Distribution Panel	2		2	
24	Distance of New Cable Racking	20		20	
25	Distance of Shared Cable Racking	130		130	
26					
27	**Express Entrance Enclosure**				
28	Distance from POI to Manhole '0' (feet)	50		50	
29	Core Drills per central office	2		2	
30	Collocators per Utility Hole/Conduit/CO	3		3	
31	Distance from POI to Cable Vault (feet)	150		150	
32	Distance for New Cable Racking	20		20	
33	Distance for Existing Cable Racking	130		130	
34					
35					
36					
37					
38					
39					
40					
41					
42					
43					
44					
45					
46					
47					
48					
49					
50					
51					

	U	V	W	X	Y	Z	AA	AB	A
1	Version 1.0 Created 7/12/01, 4:35:46 PM								
2	South Dakota								
3	**2 Overall Aerial Support - Cageless**								
4		**Major Jobs**				**Minor Jobs**			
5		Default Value	Overrides (sl)	This Run		Default Value	Overrides (sl)	This Run	
6	**Aux Frame Channel**								
7	Aux Frame Channel - Number of 10 foot channels	60		60		7		7	
8	Aux Frame Channel - Number of 20 foot channels	7		7		1		1	
9	Aux Frame Channel - Expense per 10 foot channels	$ 18.00		$ 18.00		$ 12.94		$ 12.94	
10	Aux Frame Channel - Expense per 20 foot channel	$ 50.10		$ 50.10		$ 38.05		$ 38.05	
11	Aux Frame Channel - 45 Day Labor Expense per foot	$ 16.75		$ 16.75		$ 16.75		$ 16.75	
12	Aux Frame Channel - 90 Day Labor Expense per foot	$ 13.60		$ 13.60		$ 13.60		$ 13.60	
13									
14	**U Channel**								
15	U Channel - Number of U Channels	1		1		0		0	
16	U Channel - Expense per U Channel	$123.25		$123.25		$ -		$ -	
17	U Channel - 45 Day Labor Expense per foot	$ 23.25		$ 23.25		$ 23.25		$ 23.25	
18	U Channel - 90 Day Labor Expense per foot	$ 20.40		$ 20.40		$ 20.40		$ 20.40	
19									
20	**Other**								
21	Number of Aux Frame Fittings	28.79		28.79		3.56		3.56	
22	Expense per Aux Frame Fitting	$ 20.27		$ 20.27		$ 19.23		$ 19.23	
23	Number of Aux Frames Support	68.47		68.47		18.44		18.44	
24	Expense per Aux Frame Support	$ 7.00		$ 7.00		$ 5.12		$ 5.12	
25	Number of Aux Frame Nuts and Bolts	140.47		140.47		8.13		8.13	
26	Expense of Aux Frame Nuts and Bolts	$ 0.39		$ 0.39		$ 0.29		$ 0.29	
27	Number of Cable Racks Support	0.21		0.21		0		0	
28	Expense per Cable Rack Support	$ 24.19		$ 24.19		$ -		$ -	
29	Amount of Insulation	5.47		5.47		0.875		0.875	
30	Expense per Insulation	$ 2.63		$ 2.63		$ 2.42		$ 2.42	
31	Number of Miscellaneous Items	17.47		17.47		0.125		0.125	
32	Expense per miscellaneous item	$ 11.24		$ 11.24		$ 6.58		$ 6.58	
33	Number of Nuts and Bolts - cable racking	0.42		0.42		0.25		0.25	
34	Expense of Nuts and Bolts - cable racking	$ 0.52		$ 0.52		$ 0.52		$ 0.52	
35	Number of General Support items	1.58		1.58		0		0	
36	Expense of General Support items	$ 1.95		$ 1.95		$ -		$ -	
37	Number of U-Channel - Other Items	1.47		1.47		7.5		7.5	
38	Expense of U-Channel - Other Items	$ 7.25		$ 7.25		$ 2.18		$ 2.18	
39	Number of U-Channel Fittings	0		0		0.25		0.25	
40	Expense of U-Channel Fitting	$ -		$ -		$ 2.78		$ 2.78	
41									
42									
43									
44									
45									
46									
47									
48									
49									
50									
51									

	AD	AE	AF	AG	AI	AJ	AK
1	Version 1.0 Created 7/12/01, 4:35:46 PM						
2	South Dakota						
3	**2 Cable Racking - Cageless**						
4		**Major Jobs**			**Minor Jobs**		
5		Default Value	Overrides (sl)	This Run	Default Value	Overrides (sl)	This Run
6	**Cable Racking Channel**						
7	Number of Channels	9.5		9.5	1.3		1.3
8	Expense per Channel	$ 74.52		$74.52	$ 69.17		$ 69.17
9	45 Day Labor Expense per Channel	$ 24.06		$24.06	$ 24.06		$ 24.06
10	90 Day Labor Expense per Channel	$ 21.93		$21.93	$ 21.93		$ 21.93
11							
12	**Cable Racking Ladder**						
13	Number of Ladders	1.5		1.5	0.1		0.1
14	Expense per Ladder	$ 30.70		$30.70	$ 23.76		$ 23.76
15	45 Day Labor Expense per Ladder	$ 24.06		$24.06	$ 24.06		$ 24.06
16	90 Day Labor Expense per Ladder	$ 21.93		$21.93	$ 21.93		$ 21.93
17							
18	**Horn**						
19	Number of Horns	29.3		29.3	2.4		2.4
20	Expense per Horn	$ 13.93		$13.93	$ 15.70		$ 15.70
21	45 Day Labor Expense per Horn	$ 8.43		$ 8.43	$ 8.43		$ 8.43
22	90 Day Labor Expense per Horn	$ 7.00		$ 7.00	$ 7.00		$ 7.00
23							
24	**Pan**						
25	Amount of Pan	7.2		7.2	1.4		1.4
26	Expense for Pan	$ 26.31		$26.31	$ 28.77		$ 28.77
27	45 Day Labor Expense per Pan	$ 16.14		$16.14	$ 16.14		$ 16.14
28	90 Day Labor Expense per Pan	$ 13.56		$13.56	$ 13.56		$ 13.56
29							
30	**Other**						
31	Number of Systems Ladders	10.6		10.6	1		1
32	Expense per Systems Ladder	$ 4.91		$ 4.91	$ 2.65		$ 2.65
33	Number of Brackets	17.7		17.7	10.8		10.8
34	Expense per Bracket	$ 12.05		$12.05	$ 13.60		$ 13.60
35	Number of Fittings	51.1		51.1	35		35
36	Expense per Fitting	$ 8.04		$ 8.04	$ 6.84		$ 6.84
37	Number of Insulators	3.7		3.7	1.6		1.6
38	Expense per Insulator	$ 1.04		$ 1.04	$ 0.64		$ 0.64
39	Number of Cable Racking Kits	9.1		9.1	3.8		3.8
40	Expense per Cable Racking Kit	$ 60.15		$60.15	$ 49.39		$ 49.39
41	Number of Miscellaneous Items	142.7		142.7	40		40
42	Expense per Miscellaneous Item	$ 0.10		$ 0.10	$ 0.02		$ 0.02
43	Number of Support Items	33.4		33.4	8.2		8.2
44	Expense per Support Item	$ 7.55		$ 7.55	$ 6.14		$ 6.14
45	Number of Nuts and Bolts	16.8		16.8	20.1		20.1
46	Expense per set of Nuts and Bolts	$ 0.47		$ 0.47	$ 0.49		$ 0.49
47							
48							
49							
50							
51							

	AM	AN	AO	AP
1	Version 1.0 Created 7/12/01, 4:35:46 PM			
2	South Dakota			
3	**2 Bay Support Construction - Cageless**			
4				
5		Default Value	Overrides (sl)	This Run
6	**Bay**			
7	Number of Bays	7.5		7.5
8	Expense per Bay	$279.71		$ 279.71
9	45 Day Labor Expense per 1st Bay	$497.82		$ 497.82
10	45 Day Labor Expense add'l Bay	$393.61		$ 393.61
11	90 Day Labor Expense per Bay	$438.27		$ 438.27
12	90 Day Labor Expense add'l Bay	$332.62		$ 332.62
13				
14	**AC Outlet**			
15	Number of AC Outlets	2.25		2.25
16	Expense per AC Outlet	$ 94.05		$ 94.05
17	45 Day Labor Expense per Outlet	$126.93		$ 126.93
18	90 Day Labor Expense per Outlet	$ 99.09		$ 99.09
19				
20	**End Guard**			
21	Number of End Guards	3.5		3.5
22	Expense per End Guard	$379.46		$ 379.46
23	45 Day Labor Expense per End Guard	$ 84.76		$ 84.76
24	90 Day Labor Expense per End Guard	$ 58.14		$ 58.14
25				
26	**Other**			
27	Number of Anchor Bolts	16.5		16.5
28	Expense per Anchor Bolt Set	$ 27.15		$ 27.15
29	Number of Filler Panels	2.875		2.875
30	Expense per Filler Panel	$220.09		$ 220.09
31	Number of Guard Rails	5		5
32	Expense per Guard Rail	$ 66.56		$ 66.56
33	Number of Mountings	28.25		28.25
34	Expense per Mounting	$ 89.70		$ 89.70
35	Number of Miscellaneous Items	12.75		12.75
36	Expense per Miscellaneous Item	$ 0.47		$ 0.47
37				
38				
39				
40				
41				
42				
43				
44				
45				
46				
47				
48				
49				
50				
51				

	AR	AS	AT	AU	AV
1	Version 1.0 Created 7/12/01, 4:35:46 PM				
2	South Dakota				
3	**2 Lighting - Cageless**				
4					
5		**Default Value**	**Overrides (sl)**	**This Run**	
6	**Fixtures**				
7	Number of Fixtures	2.56		2.56	
8	Expense per Fixture	$111.70		$ 111.70	
9	45 Day Labor Expense per Fixture	$213.59		$ 213.59	
10	90 Day Labor Expense per Fixture	$202.12		$ 202.12	
11					
12	**Lighting**				
13	Number of Lights	1.71		1.71	
14	Expense per Light	$103.96		$ 103.96	
15	45 Day Labor Expense per Light	$213.59		$ 213.59	
16	90 Day Labor Expense per Light	$202.12		$ 202.12	
17					
18	**Cable**				
19	Number of Cables	13.66		13.66	
20	Expense per Cable	$ 0.37		$ 0.37	
21	45 Day Labor Expense per 4 Cables	$ 4.82		$ 4.82	
22	90 Day Labor Expense per 4 Cables	$ 3.31		$ 3.31	
23					
24	**Conduit Support**				
25	Number of Conduit Supports	0.07		0.07	
26	Expense per Conduit Support	$165.46		$ 165.46	
27	45 Day Labor Expense per foot Conduit Suppo	$ 19.07		$ 19.07	
28	90 Day Labor Expense per foot Conduit Suppo	$ 17.77		$ 17.77	
29					
30	**Wire**				
31	Number of Wires	17.07		17.07	
32	Expense per Wire	$ 0.25		$ 0.25	
33	45 Day Labor Expense per Wire	$ 3.65		$ 3.65	
34	90 Day Labor Expense per Wire	$ 2.77		$ 2.77	
35					
36					
37	**Other**				
38	Number of Conduit Supports - Other	12.00		12.00	
39	Expense per Conduit Support - Other	$ 0.11		$ 0.11	
40	Number of Outlet Raceways	2.27		2.27	
41	Expense per Outlet Raceway	$ 44.11		$ 44.11	
42	Number of Supports	8.15		8.15	
43	Expense per Support	$ 8.42		$ 8.42	
44	Number of Switches	1.20		1.20	
45	Expense per Switch	$ 97.81		$ 97.81	
46	Number of Fittings	8.73		8.73	
47	Expense per Fitting	$ 4.74		$ 4.74	
48	Number of Fitting Supports	0.73		0.73	
49	Expense per Fitting Supports	$ 13.67		$ 13.67	
50	Number of Miscellaneous Items	5.22		5.22	
51	Expense per Miscellaneous Item	$ 0.27		$ 0.27	

D. Defaults and Overrides

	AW	AX	AY	AZ	BA
1	Version 1.0 Created 7/12/01, 4:35:46 PM				
2	South Dakota				
3	**2.1 & 3.1 Cable Hole**				
4					
5		Default Value	Overrides (sl)	This Run	
6	**Fire Stop**				
7	Number of Fire Stop	0.83		0.83	
8	Expense per Fire Stop	$ 1.36		$ 1.36	
9	45 Day Labor Expense per Fire Stop	$ 271.74		$ 271.74	
10	90 Day Labor Expense per Fire Stop	$ 253.32		$ 253.32	
11					
12	**Other**				
13	Number of Bags	0.24		0.24	
14	Expense per Bag	$ 29.34		$ 29.34	
15	Number of Labels	1.27		1.27	
16	Expense per Label	$ 0.22		$ 0.22	
17	Amount of Putty	1.73		1.73	
18	Expense of Putty	$ 27.02		$ 27.02	
19	Number of Sheets	0.37		0.37	
20	Expense per Sheet	$ 69.55		$ 69.55	
21	Amount of Tape	0.07		0.07	
22	Expense of Tape	$ 188.83		$ 188.83	
23	Number of miscellaneous items	0.44		0.44	
24	Expense per miscellaneous item	$ 2.64		$ 2.64	
25					
26					
27					
28					
29					
30					
31					
32					
33					
34					
35					
36					
37					
38					
39					
40					
41					
42					
43					
44					
45					
46					
47					
48					
49					
50					
51					

	BB	BC	BD	BE	B
1	Version 1.0 Created 7/12/01, 4:35:46 PM				
2	South Dakota				
3	**2.1 Cageless Miscellaneous Inputs**				
4					
5		Default Value	Overrides (sl)	This Run	
6	**Fiber Duct**				
7	Number of Ducts	0.20		0.20	
8	Expense per Duct	$ 3.06		$ 3.06	
9	45 Day Labor Expense per Duct	$ 22.45		$ 22.45	
10	90 Day Labor Expense per Duct	$ 18.89		$ 18.89	
11					
12	**Other**				
13	Number of Misc Materials	0.95		0.95	
14	Expense for Misc Materials	803.17872		803.17872	
15	Number of Bolt Kits	0.02		0.02	
16	Expense per Bolt Kit	$ 7.53		$ 7.53	
17	Number of Eqpt Nuts and Bolts	0.17		0.17	
18	Expense for Eqpt Nuts and Bolts	$ 5.71		$ 5.71	
19	Number of General Nuts and Bolts	17.12		17.12	
20	Expense for General Nuts and Bolts	$ 0.40		$ 0.40	
21	Amount of Paint	1.29		1.29	
22	Expense for Paint	$ 8.66		$ 8.66	
23	Number of Tags	2.02		2.02	
24	Expense per Tag	$ 2.86		$ 2.86	
25	Amount of Tape	0.34		0.34	
26	Expense for Tape	$ 9.92		$ 9.92	
27	Number of Miscellaneous Items	5.49		5.49	
28	Expense per Miscellaneous Item	$ 115.25		$ 115.25	
29					
30					
31					
32					
33					
34					
35					
36					
37					
38					
39					
40					
41					
42					
43					
44					
45					
46					
47					
48					
49					
50					
51					

	BG	BH	BI	BJ	B
1	Version 1.0 Created 7/12/01, 4:35:46 PM				
2	South Dakota				
3	**2 Grounding - Cageless**				
4					
5		**Default Value**	**Overrides (sl)**	**This Run**	
6	**1/0 Cable**				
7	1/0 Cable Footage	0.98		0.98	
8	Expense per foot of 1/0 Cable	$ 3.12		$ 3.12	
9	45 Day Labor Expense per foot of 1/0 Cable	$ 3.42		$ 3.42	
10	90 Day Labor Expense per foot of 1/0 Cable	$ 2.42		$ 2.42	
11					
12	**# 2 Cable**				
13	#2 Cable Footage	34.88		34.88	
14	Expense per foot of #2 Cable	$ 1.56		$ 1.56	
15	45 Day Labor Expense per foot of #2 Cable	$ 1.21		$ 1.21	
16	90 Day Labor Expense per foot of #2 Cable	$ 0.83		$ 0.83	
17					
18	**4/0 Cable**				
19	4/0 Cable Footage	33.66		33.66	
20	Expense per foot of 4/0 Cable	$ 2.11		$ 2.11	
21	45 Day Labor Expense per foot of 4/0 Cable	$ 6.35		$ 6.35	
22	90 Day Labor Expense per foot of 4/0 Cable	$ 4.54		$ 4.54	
23					
24	**# 6 Cable**				
25	#6 Cable Footage	0.61		0.61	
26	Expense per foot of #6 Cable	$ 0.67		$ 0.67	
27	45 Day Labor Expense per foot of #6 Cable	$ 1.21		$ 1.21	
28	90 Day Labor Expense per foot of #6 Cable	$ 0.83		$ 0.83	
29					
30	**750 Cable**				
31	750 Cable Footage	10.85		10.85	
32	Expense per foot of 750 Cable	$ 8.80		$ 8.80	
33	45 Day Labor Expense per foot of 750 Cable	$ 27.42		$ 27.42	
34	90 Day Labor Expense per foot of 750 Cable	$ 18.90		$ 18.90	
35					
36	**Ground Bar**				
37	Number of Ground Bars	0.07		0.07	
38	Expense per Ground Bar	$ 83.28		$ 83.28	
39	45 Day Labor Expense per Ground Bar	$ 299.52		$ 299.52	
40	90 Day Labor Expense per Ground Bar	$ 247.95		$ 247.95	
41					
42	**Alternative Racking**				
43	Amount of Alternative Racking	1.07		1.07	
44	Expense of Alternative Racking	$ 6.87		$ 6.87	
45					
46					
47					
48					
49					
50					
51					

	BL	BM	BN	BO	BP
1	Version 1.0 Created 7/12/01, 4:35:46 PM				
2	South Dakota				
3	**3.1 Caged Expense Inputs**				
4					
5		**Default Value**	**Overrides (sl)**	**This Run**	
6	**Fence**				
7	Fence - 100 sf	$ 3,970.00		$ 3,970.00	
8	Fence - 200 sf	$ 4,950.00		$ 4,950.00	
9	Fence - 300 sf	$ 5,560.00		$ 5,560.00	
10	Fence - 400 sf	$ 6,140.00		$ 6,140.00	
11					
12	**HVAC**				
13	HVAC - 100 sf	$ 713.00		$ 713.00	
14	HVAC - 200 sf	$ 854.00		$ 854.00	
15	HVAC - 300 sf	$ 1,071.00		$ 1,071.00	
16	HVAC - 400 sf	$ 1,596.00		$ 1,596.00	
17					
18	**Electrical Distrtribution**				
19	Electrical Distrtribution - 100 sf	$ 4,341.00		$ 4,341.00	
20	Electrical Distrtribution - 200 sf	$ 4,379.00		$ 4,379.00	
21	Electrical Distrtribution - 300 sf	$ 4,398.00		$ 4,398.00	
22	Electrical Distrtribution - 400 sf	$ 4,416.00		$ 4,416.00	
23					
24	**Lighting**				
25	Lighting - 100 sf	$ 679.00		$ 679.00	
26	Lighting - 200 sf	$ 932.00		$ 932.00	
27	Lighting - 300 sf	$ 1,184.00		$ 1,184.00	
28	Lighting - 400 sf	$ 1,437.00		$ 1,437.00	
29					
30					
31					
32					
33					
34					
35					
36					
37					
38					
39					
40					
41					
42					
43					
44					
45					
46					
47					
48					
49					
50					
51					

	BQ	BR	BS	BT	BV	BW	BX
1	Version 1.0 Created 7/12/01, 4:35:46 PM						
2	South Dakota						
3	**3 Cable Racking - Caged**						
4		**Major Jobs**			**Minor Jobs**		
5		Default Value	Overrides (sl)	This Run	Default Value	Overrides (sl)	This Run
6	**Cable Racking Channel**						
7	Number of Channels	8		8	2.5		2.5
8	Expense per Channel	$ 74.52		$ 74.52	$ 69.17		$ 69.17
9	45 Day Labor Expense per Channel	$ 24.06		$ 24.06	$ 24.06		$ 24.06
10	90 Day Labor Expense per Channel	$ 21.93		$ 21.93	$ 21.93		$ 21.93
11							
12	**Horn**						
13	Number of Horns	24.6		24.6	4.6		4.6
14	Expense per Horn	$ 13.93		$ 13.93	$ 15.70		$ 15.70
15	45 Day Labor Expense per Horn	$ 8.43		$ 8.43	$ 8.43		$ 8.43
16	90 Day Labor Expense per Horn	$ 7.00		$ 7.00	$ 7.00		$ 7.00
17							
18	**Pan**						
19	Amount of Pan	6.0		6.0	2.7		2.7
20	Expense for Pan	$ 26.31		$ 26.31	$ 28.77		$ 28.77
21	45 Day Labor Expense per Pan	$ 16.14		$ 16.14	$ 16.14		$ 16.14
22	90 Day Labor Expense per Pan	$ 13.56		$ 13.56	$ 13.56		$ 13.56
23							
24	**Other**						
25	Number of Systems Ladders	8.9		8.9	1.2		1.2
26	Expense per Systems Ladder	$ 4.91		$ 4.91	$ 2.65		$ 2.65
27	Number of Brackets	14.9		14.9	20.8		20.8
28	Expense per Bracket	$ 12.05		$ 12.05	$ 13.60		$ 13.60
29	Number of Fittings	43.0		43.0	67.3		67.3
30	Expense per Fitting	$ 8.04		$ 8.04	$ 6.84		$ 6.84
31	Number of Insulators	3.1		3.1	3.1		3.1
32	Expense per Insulator	$ 1.04		$ 1.04	$ 0.64		$ 0.64
33	Number of Cable Racking Kits	7.7		7.7	7.3		7.3
34	Expense per Cable Racking Kit	$ 60.15		$ 60.15	$ 49.39		$ 49.39
35	Number of Miscellaneous Items	120.2		120.2	76.9		76.9
36	Expense per Miscellaneous Item	$ 0.10		$ 0.10	$ 0.02		$ 0.02
37	Number of Support Items	28.1		28.1	15.8		15.8
38	Expense per Support Item	$ 7.55		$ 7.55	$ 6.14		$ 6.14
39	Number of Nuts and Bolts	14.2		14.2	38.7		38.7
40	Expense per set of Nuts and Bolts	$ 0.47		$ 0.47	$ 0.49		$ 0.49
41							
42							
43							
44							
45							
46							
47							
48							
49							
50							
51							

	BZ	CA	CB	CC	C CE	CF	CG
1	Version 1.0 Created 7/12/01, 4:35:46 PM						
2	South Dakota						
3	**3 Overall Aerial Support - Caged**						
4		**Major Jobs**			**Minor Jobs**		
5		Default Value	Overrides (sl)	This Run	Default Value	Overrides (sl)	This Run
6	**Aux Frame Channel**						
7	Aux Frame Channel - Number of 10 foot channels	32		32	5		5
8	Aux Frame Channel - Number of 20 foot channels	16		16	3		3
9	Aux Frame Channel - Expense per 10 foot channels	$ 18.00		$ 18.00	$ 12.94		$ 12.94
10	Aux Frame Channel - Expense per 20 foot channel	$ 50.10		$ 50.10	$ 38.05		$ 38.05
11	Aux Frame Channel - 45 Day Labor Expense per foot	$ 16.75		$ 16.75	$ 16.75		$ 16.75
12	Aux Frame Channel - 90 Day Labor Expense per foot	$ 13.60		$ 13.60	$ 13.60		$ 13.60
13							
14	**U Channel**						
15	U Channel - Number of U Channels	1		1	0		0
16	U Channel - Expense per U Channel	$ 123.25		$ 123.25	$ -		$ -
17	U Channel - 45 Day Labor Expense per foot	$ 23.25		$ 23.25	$ 23.25		$ 23.25
18	U Channel - 90 Day Labor Expense per foot	$ 20.40		$ 20.40	$ 20.40		$ 20.40
19							
20	**Other**						
21	Number of Aux Frame Fittings	20.64		20.64	3.59		3.59
22	Expense per Aux Frame Fitting	$ 20.27		$ 20.27	$ 19.23		$ 19.23
23	Number of Aux Frames Support	49.09		49.09	18.59		18.59
24	Expense per Aux Frame Support	$ 7.00		$ 7.00	$ 5.12		$ 5.12
25	Number of Aux Frame Nuts and Bolts	100.72		100.72	8.19		8.19
26	Expense of Aux Frame Nuts and Bolts	$ 0.39		$ 0.39	$ 0.29		$ 0.29
27	Number of Cable Racks Support	0.15		0.15	0.00		0.00
28	Expense per Cable Rack Support	$ 24.19		$ 24.19	$ -		$ -
29	Amount of Insulation	3.92		3.92	0.88		0.88
30	Expense per Insulation	$ 2.63		$ 2.63	$ 2.42		$ 2.42
31	Number of Miscellaneous Items	12.53		12.53	0.13		0.13
32	Expense per miscellaneous item	$ 11.24		$ 11.24	$ 6.58		$ 6.58
33	Number of Nuts and Bolts - cable racking	0.30		0.30	0.25		0.25
34	Expense of Nuts and Bolts - cable racking	$ 0.52		$ 0.52	$ 0.52		$ 0.52
35	Number of General Support items	1.13		1.13	0.00		0.00
36	Expense of General Support items	$ 1.95		$ 1.95	$ -		$ -
37	Number of U-Channel - Other Items	1.06		1.06	7.56		7.56
38	Expense of U-Channel - Other Items	$ 7.25		$ 7.25	$ 2.18		$ 2.18
39	Number of U-Channel Fittings	0.00		0.00	0.25		0.25
40	Expense of U-Channel Fitting	$ -		$ -	$ 2.78		$ 2.78
41							
42							
43							
44							
45							
46							
47							
48							
49							
50							
51							

Cell: A15

Comment: Sales tax is applied to equipment and material in all states that have a sales tax. However, in some of these states the full billed amount of contracts is subject to sales tax. The default is yes in those states where tax on the total contract is applicable. This sets the variable Tax_On_Labor to the value "1". Thoughout the workbook Tax_On_Labor is used inside "If" statements to determine the use of sales tax.

Cell: K28

Comment: The Total of POI and existing Manhole weighting must equal 100%, If one is overridden and the other is not, adjustments will be made to the one that is not overriden to make the total equal 100%. If both are overriden, existing Manhole will be calculated to be equal to 1 - POI.

Cell: A37

Comment: See the Enhanced Non-Recurring Cost Model for detailed documentation to QPF.

	A	C	D
1	Version 1.0 Created 7/12/01, 4:35:46 PM		
2	South Dakota		
3		**90 Days**	**Monthly Maintenance**
4			
5		Direct Expenses	Direct Expenses
6			
7	**1.1 Standard Collocation**	sE p5 cC&H	cC*sG cF377C/12
8			
9			
10	DS0 Terminations (100)		
11	Placement of Cable	$ 186.28	$ 0.2745
12	Cable	$ 239.62	$ 0.3531
13	Block	$ 415.05	$ 0.6116
14	Placement of Block	$ 193.20	$ 0.2847
15			
16			
17	DS0 Terminations (1)		
18	Placement of Cable	$ 3.50	$ 0.0052
19	Cable	$ 3.28	$ 0.0048
20	Block	$ 5.69	$ 0.0084
21	Placement of Block	$ 2.65	$ 0.0039
22			
23			
24	DS1 Terminations (28)		cC*sG cF357C/12
25	Placement of Cable	$ 309.82	$ 0.7653
26	Cable	$ 276.63	$ 0.6833
27	Panel	$ 313.58	$ 0.7746
28	Placement of Panel	$ 66.11	$ 0.1633
29			
30			
31	DS1 Terminations (1)		
32	Placement of Cable	$ 33.31	$ 0.0823
33	Cable	$ 29.74	$ 0.0735
34	Panel	$ 37.66	$ 0.0930
35	Placement of Panel	$ 7.11	$ 0.0176
36			
37			
38	DS3 Terminations (1)		
39	Placement of Cable	$ 126.14	$ 0.3116
40	Cable	$ 178.63	$ 0.4413
41	Connector	$ 182.91	$ 0.4518
42	Placement of Connector	$ 18.99	$ 0.0469
43			
44			
45	**2.1 Cageless Collocation**	sE p5 sum C25:C47	cC*sG cF357C/12
46			
47			
48	Standard Space Construction Charge	$ 20,448.60	
49	Earthquake Zone Addition	$ -	
50	Standard Space Construction Charge With Earthquake Addition in earthquake states	$ 20,448.60	$ 50.5126
51			
52			
53	Additional Bays-Per Bay	sE p5 sum E30:E47	
54	Without earthquake Addition	$ 1,851.87	
55	Earthquake Zone Addition	$ -	
56	Additional Bay Expense With Earthquake Addition in earthquake states	$ 1,851.87	$ 4.5745
57			
58			
59	Variations In Power Cable Sizes from 40 amp	sE p2	
60	20 AMP	$ (1,402.28)	$ (3.4640)
61	30 AMP	$ (889.73)	$ (2.1978)
62	40 AMP	$ -	$ -
63	60 AMP	$ 1,563.15	$ 3.8613
64			
65			
66	Additional Power Cables	sE p56 r18	cC*sG cF357C/12
67	20 AMP	$3,647	$ 9.0098

	A	C	D
1	Version 1.0 Created 7/12/01, 4:35:46 PM		
2	South Dakota		
3		**90 Days**	**Monthly Maintenance**
4			
5		Direct Expenses	Direct Expenses
68	30 AMP	$4,160	$ 10.2759
69	40 AMP	$5,050	$ 12.4738
70	60 AMP	$6,613	$ 16.3351
71			
72			
73	**3.1 Caged Collocation**	p6 sum C55:78 by Size	
74			
75			
76	Standard Space Construction Charge		
77	Cage - up to 100 sq feet	$ 36,730.18	$ 90.7317
78	Cage - up to 200 sq feet	$ 38,142.18	$ 94.2196
79	Cage - up to 300 sq feet	$ 39,240.18	$ 96.9319
80	Cage - up to 400 sq feet	$ 40,616.18	$ 100.3310
81			
82	Standard Space Construction Charge - Fencing Credit		
83	Cage - up to 100 sq feet	$ (3,970.00)	$ (9.8068)
84	Cage - up to 200 sq feet	$ (4,950.00)	$ (12.2276)
85	Cage - up to 300 sq feet	$ (5,560.00)	$ (13.7344)
86	Cage - up to 400 sq feet	$ (6,140.00)	$ (15.1672)
87			
88			
89	Variations In Power Cable Sizes from 60 Amp	r95:102 - r98	
90	20 A	$ (5,563.89)	$ (13.7440)
91	30 A	$ (5,084.33)	$ (12.5594)
92	40 A	$ (4,073.85)	$ (10.0633)
93	60 A	$ -	$ -
94	100 A	$ 6,785.12	$ 16.7607
95	200 A	$ 21,907.43	$ 54.1162
96	300 A	$ 42,300.24	$ 104.4910
97	400 A	$ 64,779.41	$ 160.0195
98			
99			
100	Additional Power Cables	sE p74 r18	
101	20 A	$ 4,567.74	$ 11.2833
102	30 A	$ 5,047.30	$ 12.4679
103	40 A	$ 6,057.78	$ 14.9640
104	60 A	$ 10,131.63	$ 25.0274
105	100 A	$ 16,916.75	$ 41.7881
106	200 A	$ 32,039.06	$ 79.1436
107	300 A	$ 52,431.86	$ 129.5183
108	400 A	$ 74,911.03	$ 185.0469
109			
110			
111	Ground Wire (per foot)	sE p6 C87 to C92	
112	# 2 AWG	8.056177043	$ 0.0199
113	1/0 AWG	13.78822716	$ 0.0341
114	4/0 AWG	15.88126492	$ 0.0392
115	350 kcmil	21.39792016	$ 0.0529
116	500 kcmil	24.22541598	$ 0.0598
117	750 kcmil	41.88106194	$ 0.1035
118			

	A	B	C	D	E
1	Version 1.0 Created 7/12/01, 4:35:46 PM				
2	South Dakota				
3					
4			Direct Expense - Initial Charge	Investment	Monthly Maintenance on Expense Items
5	**1.2 Entrance Facility**				
6		Standard Shared Entrance Facility	sE p15	sE p16	cC * sG c7 by Acct
7		4C	$59.24	$364.17	$0.03
8		85C	$99.20		$0.06
9		257C	$101.12	$17.30	$0.07
10		357C	$213.90		$0.53
11		Cross Connect Entrance Facility	sE p24	sE p25	
12		4C	$59.24	$364.17	$0.03
13		85C	$99.20		$0.06
14		257C	$101.12	$17.30	$0.07
15		357C	$295.76		$0.73
16		Express Entrance Facility	sE p31	sE p31	
17		4C	$5,640.31	$6,366.44	$2.61
18		257C	$1,277.89	$311.49	$0.91
19	**1.3 Fiber Splicing**		sE p33 cC		
20		Per Setup	$363.40		
21		Per Fiber Spliced	$27.50		
22	**1.4.3 Backup AC Feed - Per Foot**		sE p37 r17&28		cC*sG cF357C/12
23		20 Amp, Single Phase	$5.78		$0.0143
24		20 Amp, Three Phase	$7.17		$0.0177
25		30 Amp, Single Phase	$6.24		$0.0154
26		30 Amp, Three Phase	$8.56		$0.0212
27		40 Amp, Single Phase	$7.33		$0.0181
28		40 Amp, Three Phase	$10.09		$0.0249
29		50 Amp, Single Phase	$8.70		$0.0215
30		50 Amp, Three Phase	$12.15		$0.0300
31		60 Amp, Single Phase	$9.84		$0.0243
32		60 Amp, Three Phase	$13.98		$0.0345
33		100 Amp, Single Phase	$12.18		$0.0301
34		100 Amp, Three Phase	$19.02		$0.0470

	A	B	C	D	E
1	Version 1.0 Created 7/12/01, 4:35:46 PM				South Dakota
2			Investments	Direct Expenses	Sheet Source
3	**1.4 Power Usage**				
4	**Power Plant per Amp Ordered Less than 60 AMPS**		$527.89		E. Power Equipment sE p35
5	**Power Plant per Amp Ordered Equal to or Greater than 60 Amps**		$349.22		E. Power Equipment sE p35
6	**Power Usage - Per Amp**				E. Power Usage
7		20, 30, 40 & 60 Amp		$1.61	sE p35
8		100, 200, 300, & 400 Amp		$3.22	
9	**Backup AC Power - Per Amp**				E. Backup AC Power Usage
10	357C	120 V	$300.37	$8.44	sE p38 cF
11	357C	208 V, Single Phase	$520.64	$14.62	
12	357C	208 V, Three Phase	$900.70	$25.30	
13	357C	240 V, Single Phase	$600.74	$16.87	
14	357C	240 V, Three Phase	$1,039.27	$29.19	
15	357C	480 V, Three Phase	$2,078.55	$58.38	
16	**1.5 Security - Per Person**				sE p40
17	361C	ID Cards	$9.57		E. Security - Per Person
18		Hours Badging		$0.41	E. Security - Per Person
19		Card Access per Office	$250.00		
20	**1.6 CO Synchronization**				E. CO Synchroniation
21	357C		$303.69		sE p41 D37
22	**1.7 ITP - Per Termination**				E. ITP
23	377C	DS0	$19.90		sE p42 r40
24	357C	DS1	$64.98		
25	357C	DS3	$655.35		
26	**2.2, 3.3 Space Rent**				E. Space Rent
27		Land	$7.20		sE p72 cC
28		Building	$163.24		

	A	C	D	E	F	H
1	Version 1.0 Created 7/12/01, 4:35:46 PM					
2	South Dakota	Standard Configuration	Additional Bay/Power	Additional Bay/Power		Standard Configuration
3		90 Day	45 Day	90 Day		90 Day
4						
5	**Standard Collocation**					
6						
7						sE p8 cO+P * Sale
8	DS0 Terminations (100)	sE p7 cG+H * Sales tax			DS0 Terminations (1)	
9	Placement of Cable	$ 186.28			Placement of Cable	$ 3.50
10	Cable	$ 239.62			Cable	$ 3.28
11	Block	$ 415.05			Block	$ 5.69
12	Placement of Block	$ 193.20			Placement of Block	$ 2.65
13						sE p8 cQ * Sales
14	DS1 Terminations (28)	sE p7 cI * Sales tax			DS1 Terminations (1)	
15	Placement of Cable	$ 309.82			Placement of Cable	$ 33.31
16	Cable	$ 276.63			Cable	$ 29.74
17	Panel	$ 313.58			Panel	$ 37.66
18	Placement of Panel	$ 66.11			Placement of Panel	$ 7.11
19						
20	DS3 Terminations (1)	sE p7 cJ * Sales tax				
21	Placement of Cable	$ 126.14				
22	Cable	$ 178.63				
23	Panel/Connector	$ 182.91				
24	Placement of Panel/Connect	$ 18.99				
25		sE p46 C46				
26	Cable Hole	$ 336.48				
27						
28	Motor Vehicle	$ 228.52		sE p55 B39		
29		sE p54 C61	sE p54 B63	sE p54 C63		
30	Miscellaneous	$ 478.26	$ 239.23	$ 239.13		
31						
32						
33	**Cageless Collocation**					
34						
35	Power Cable (40 amps)	$5,050		sE p56 I18		
36						
37	Engineering	$ 10,432.32		sE p66 D48		
38						
39	Ground Wire	$ 689.05		sE p49 r81		
40						
41	Cable Racking (sE p70)	$ 2,832.45	$ 1,545.65	$ 1,416.23		
42						
43	Overall Aerial Support (sE p64)	$ 180.51	$ 103.00	$ 90.26		
44						
45	Ground Bar (sE p51)	$ 8.82				
46						
47	Lighting (sE p60)	$ 212.51	$ 109.69	$ 106.26		
48						
49	Bay Construction (sE p44)	$ 909.53	$ 478.70	$ 454.76		
50						
51						
52	**Caged Collocation**					

	A	C	D	E	F	H
1	Version 1.0 Created 7/12/01, 4:35:46 PM					
2	South Dakota	Standard Configuration	Additional Bay/Power	Additional Bay/Power		Standard Configuration
3		90 Day	45 Day	90 Day		90 Day
4						
53						
54	Cage	sD p12 cBO				
55	100 sq feet	$ 3,970.00				
56	200 sq feet	$ 4,950.00				
57	300 sq feet	$ 5,560.00				
58	400 sq feet	$ 6,140.00				
59						
60	HVAC	sD p12 cBO				
61	100 sq feet	$ 713.00				
62	200 sq feet	$ 854.00				
63	300 sq feet	$ 1,071.00				
64	400 sq feet	$ 1,596.00				
65						
66	Electrical	sD p12 cBO				
67	100 sq feet	$ 4,341.00				
68	200 sq feet	$ 4,379.00				
69	300 sq feet	$ 4,398.00				
70	400 sq feet	$ 4,416.00				
71						
72	Power Cable (60 amps)	$10,131.63		sE p74 E24		
73						
74	Engineering	$ 10,432.32		sE p66 D48		
75						
76	Cable Racking	$ 6,059.56		sE p70 D111		
77						
78	Overall Aerial Support	$ 403.66		sE p64 D101		
79						
80	Lighting	sD p12 cBO				
81	100 sq feet	$ 679.00				
82	200 sq feet	$ 932.00				
83	300 sq feet	$ 1,184.00				
84	400 sq feet	$ 1,437.00				
85						
86	Ground Wire (per foot)	sE p76 r17				
87	# 2 AWG	$8.06				
88	1/0 AWG	$13.79				
89	4/0 AWG	$15.88				
90	350 kcmil	$21.40				
91	500 kcmil	$24.23				
92	750 kcmil	$41.88				

	A	G	H	I	J
1	Version 1.0 Created 7/12/01, 4:35:46 PM				
2	South Dakota	**Per Block**			
3		**90 Day**			
4		DS0		DS1	DS3
5	**Material Description**	410 Block	89 Block	56 ckts	
9	Average Expense Per Block/Panel	$ 376.00	$ 85.46	$ 524.25	$ 3,259.44
11	# of Terminations Per Block/Panel	100.00	100.00	56.00	24.00
13	Number of Blocks/Panels	0.9	0.1	0.5	0.04
14	Total Price for Blocks/Panels (r8*r12)	$ 338.40	$ 8.55	$ 262.13	$ 135.81
16	**Average Expense Per Termination**				
19	Labor				
20	Average Labor Expense Per Block/Panel	$ 182.89	$ 182.85	$ 125.16	$ 125.16
22	Total Labor Expense (r20*r12)	$ 164.60	$ 18.29	$ 62.58	$ 5.22
24	Average Labor Expense Per Termination				
27	Placement	$ 1.13	$ 1.13	$ 1.27	$ 0.63
28	Number of Terminations	100.00	100.00	28.00	1.00
29	# Terminations per cable	100	100	14.00	0.50
30	Number of Cables	1.00	1.00	2.00	2.00
31	# Feet	156.05	156.05	115.47	94.77
32	Total Expense	**$ 158.70**	**$ 17.63**	**$ 293.28**	**$ 119.41**
33	**Average Expense Per Termination**				
36	Connector Expense				**$ 9.07**
37	Placement Connectors				**$ 6.38**
38	Number of Connectors				**2.00**
49	Shipping	$ 52.60	$ 11.95	$ 36.67	$ 20.27
51	Total	**$ 47.34**	**$ 1.20**	**$ 36.67**	**$ 20.27**
52	Average Number of Terminations				
53	Average Expense Per Termination				
58	**Cable Expense per Foot**	$ 1.45		$ 1.13	$ 0.89
60	**Number of Feet**	156.05		115.47	94.77
62	**Number of Cables**	1.00		2.00	2.00
64	**Total Cable Expense**	**$ 226.82**		**$ 261.86**	**$ 169.10**
66	**Number of Terminations**				
68	**Cable Expense per Termination**				

	A	O	P	Q
1	Version 1.0 Created 7/12/01, 4:35:46 PM			
2	South Dakota	**Per Termination**		
3		**90 Day**		
4		DS0		DS1
5	**Material Description**	**410 Block**	**89 Block**	**56 ckts**
6				
7				
8	Average Expense Per Block/Panel	$ 376.00	$ 85.46	$ 524.25
9				
10	# of Terminations Per Block/Panel	73.00	73.00	18.60
11				
12	Number of Blocks/Panels	0.9	0.1	1
13				
14	Total Price for Blocks/Panels (r8*r12)	$ 338.40	$ 8.55	$ 262.13
15				
16	**Average Expense Per Termination**	**$ 4.64**	**$ 0.12**	**$ 28.19**
17				
18				
19	Labor			
20	Average Labor Expense Per Block/Panel	$ 182.89	$ 182.85	$ 125.16
21				
22	Total Labor Expense (r20*r12)	$ 164.60	$ 18.29	$ 62.58
23				
24	Average Labor Expense Per Termination	**$ 2.25**	**$ 0.25**	**$ 6.73**
25				
26				
27	Placement	$ 1.13	$ 1.13	$ 1.27
28	Number of Terminations	73.00	73.00	9.30
29	# Terminations per cable	100	100	14.00
30	Number of Cables	1.00	1.00	2.00
31	# Feet	156.05	156.05	115.47
32	Total Expense	$ 217.40	$ 24.16	$ 293.28
33	**Average Expense Per Termination**	**$ 2.98**	**$ 0.33**	**$ 31.54**
34				
35				
36	Connector Expense			
37	Placement Connectors			
38	Number of Connectors			
39				
40				
41				
42				
43				
44				
45				
46				
47				
48				
49	Shipping	$ 52.60	$ 11.95	$ 73.34
50				
51	Total	$ 47.34	$ 1.20	$ 73.34
52	Average Number of Terminations			
53	Average Expense Per Termination	**$ 0.65**	**$ 0.02**	**$ 7.89**
54				
55				
56				
57				
58	**Cable Expense per Foot**	$ 1.45		$ 1.13
59				
60	**Number of Feet**	156.05		115.47
61				
62	**Number of Cables**	1.00		2.00
63				
64	**Total Cable Expense**	$ 226.82		$ 261.86
65				
66	**Number of Terminations**	73.00		9.30
67				
68	**Cable Expense per Termination**	**$ 3.11**		**$ 28.16**

Cell: G2
Comment: Per Block

Assumptions

90% of all terminating blocks are 410 blocks. The remaining 10% are 89 blocks.
One terminating block can accommodate 100 terminations.
Terminating blocks will be charged to Collocators based on ordered terminations.

Calculation

Block termination expenses = (90% * average expense of 410 blocks (from jobs) + (10% * average expense of 89 blocks (from jobs))/100 * total terminations.
Expense per termination = Block termination expenses / total terminations

Cell: O2
Comment: Per Termination

Assumptions

Terminations will run from CLEC space to IDF.
IDF is located within 50 feet of the COSMIC frame.
Total distance CLEC space to COSMIC taken is from planning documents.
Design is based on assumption no spot bay exists.
Number cable laid is derived from planning documents.
Termination expenses assume economies of laying multiple cables at a time

Version 1.0 Created 7/12/01, 4:35:46 PM					
South Dakota					
STANDARD SHARED ENTRANCE ENCLOSURE					
DIRECT EXPENSES/INVESTMENT					
	Collocation Entrance Facility	1998 Expense	Expense X Sales Tax	FRC Code	
1	Outside Fiber Cable Per Ft.	$1.04	$1.10	85C	
2	Utility Hole Expense	$6,487.54	$6,853.44	4C	
3	Cut & Replace Road Covering - Utility Hole	$1,977.60	$2,089.14	4C	
4	Cut & Replace Concrete Per Trench Ft. - Conduit	$12.36	$13.06	4C	
5	Backfill Utility Hole	$816.60	$816.60	4C	
6	Backfill Conduit Trench Per Trench Ft.	$5.21	$5.21	4C	
7	Conduit Expense Per Ft.	$21.63	$22.85	4C	
8	Expense for Pumping Utility Hole	$499.96	$499.96	4C	
9	Per Ft. Expense for Pulling Fiber in Conduit	$1.36	$1.36	4C	
10	Innerduct Per Ft.	$2.66	$2.81	4C	
11	Fiber Cable Per Ft.	$1.16	$1.23	257C	
12	Fiber Cable Racking Per Ft	$181.45	$191.68	257C	
13	Fiber Cable Splicing - Per Setup	$366.99	$387.69	85C	
14	Fiber Cable Splicing - Per Fiber Spliced	$16.32	$16.32	85C	
15	Fiber Distribution Panel	$1,394.72	$1,473.38	357C	
16	Single Fiber Jumper	$125.00	$132.05	357C	
17	Attenuator Per Fiber	$0.00	$0.00	357C	
18	Core Drill	$112.00	$112.00	4C	
19	Placing Fiber Cable on Cable Racking Per Ft	$2.39	$2.39	257C	
ASSUMPTIONS					
1	Distance from POI to USW Manhole '0' (feet)	50			
2	Fibers required per Collocator	18	Based on Average Order By CLEC		
3	Collocators per Utility Hole/Conduit/CO	3	Average Based on Actual per Office		
4	Core Drills per Manhole	2	One into the manhole and one out		
5	Number of Fiber Splice Setup	2			
6	Number of fibers spliced per CLEC	18	Based on Average Order By CLEC		
7	Distance from Manhole '0' to Cable Vault	108	Based on average from Actual distance measurements		
8	Distance between Manhole 1 and Manhole '0'	302	Based on average from Actual distance measurements		
9	Weighting of use of POI	10%	% of central offices in metro area utilized for collocation		
10	Weighting of use of Existing Manhole = (1-%POI)	90%	% of central offices in all other areas utilized for collocation		
11	Distance for New Cable Racking	20	Based on actuals from sample jobs		
12	Distance Shared Cable Racking	130	Based on actuals from sample jobs		
13	Distance from Cable Vault to CLEC Space	150			
CALCULATIONS					
Expense					

Version 1.0 Created 7/12/01, 4:35:46 PM			
South Dakota			
	STANDARD SHARED ENTRANCE ENCLOSURE		
	Utility Hole - POI		
1	Utility Hole Expense	$6,853.44	See Direct Expense/Investment 2
2	Cut and Replace Road Covering	$2,089.14	See Direct Expense/Investment 3
3	Backfill Utility Hole	$816.60	See Direct Expense/Investment 5
4	Total Utility Hole Expense	$9,759.17	Line 1 + Line 2 + Line 3
5	Number of Collocators per Utility Hole	3	See Assumption 3
6	Number of Fibers per Collocator	18	See Assumption 2
7	Utility Hole Expense Per Fiber	$180.73	Line 4/Line 5/Line 6
8	% Weighting	10%	See Assumption 9
9	Total Utility Hole Expense	$18.07	Line 7 X Line 8
	Conduit - POI		
1	Conduit Expense per Foot	$22.85	See Direct Expense/Investment 7
2	Cut and Replace Concrete per Trench Foot	$13.06	See Direct Expense/Investment 4
3	Backfill Conduit Trench per Trench Foot	$5.21	See Direct Expense/Investment 6
4	Total Conduit Expenses per Foot	$41.12	Line 1 + Line 2 + Line 3
5	Distance between POI and USW Manhole '0'	50	See Assumptions 1
6	Total Conduit Expense	$2,055.85	Line 4 X Line 5
7	Number of Collocators per Conduit	3	See Assumption 3
8	Number of Fibers per Collocator	18	See Assumption 2
9	Conduit Expense per Fiber	$38.07	Line 6/Line 7/Line 8
10	% of Weighting	10%	See Assumption 9
11	Total Conduit Expense per Fiber	$3.81	Line 9 X Line 10
	Innerduct - POI		
1	Innerduct Expense per Foot	$2.81	See Direct Expense/Investment 10
2	Pull Fiber from Utility Hole to Cable Vault Per Foot	$1.36	See Direct Expense/Investment 9
3	Total Innerduct Expense Per Foot	$4.17	Line 1 + Line 2
4	Distance between POI and USW Manhole '0'	50	See Assumption 1
5	Total Innerduct Expense	$208.50	Line 3 X Line 4
6	Pump Utility Hole Expense	$499.96	See Direct Expense/Investment 8
7	Total Expenses	$708.46	Line 5 + Line 6
8	Number of Fibers per Collocator	18	See Assumption 2
9	Innerduct Expense per Fiber	$39.36	Line 7/Line 8
10	% of Weighting	10%	See Assumption 9
11	Total Innerduct Expense per Fiber	$3.94	Line 9 X Line 10
	Cable (POI to Manhole '0')		
1	Fiber Cable Expense per Foot	$1.10	See Direct Expense/Investment 1
2	Distance between POI and USW Manhole '0'	50	See Assumption 1
3	Number of Fibers per Collocator	18	See Assumption 2
4	Cable Expense per Fiber	$3.05	(Line 1 X Line 2)/Line 3
5	% Weighting	10%	See Assumption 9
6	Total Cable Expense per Fiber	$0.31	Line 4 X Line 5
	Cable (Manhole '0' to Cable Vault)		

Version 1.0 Created 7/12/01, 4:35:46 PM			
South Dakota			
	STANDARD SHARED ENTRANCE ENCLOSURE		
1	Fiber Cable Expense per Foot	$1.10	See Direct Expense/Investment 1
2	Distance between Manhole '0' and Cable Vault	108	See Assumption 7
3	Number of Fibers per Collocator	18	See Assumption 2
4	Cable Expense per Fiber	$6.59	(Line 1 X Line 2)/Line 3
	Cable (Manhole 1 to Manhole '0')		
1	Fiber Cable Expense per Foot	$1.10	See Direct Expense/Investment 1
2	Distance between Manhole 1 and Manhole '0'	302	See Assumption 8
3	Number of Fibers per Collocator	18	See Assumption 2
4	Cable Expense per Fiber	$18.43	(Line 1 X Line 2)/Line 3
5	% Weighting	90%	See Assumption 10
6	Total Cable Expense per Fiber	$16.59	Line 4 x Line 5
	Pulling Fiber		
1	Pulling Fiber from Manhole '0' to Cable Vault	$1.36	See Direct Expense/Investment 9
2	Distance between Manhole '0' and Cable Vault	108	See Assumption 7
3	Total Expense from Manhole '0' to Cable Vault	$146.88	Line 1 X Line 2
4	Pulling Fiber from Manhole 1 to Manhole '0'	$1.36	See Direct Expense/Investment 9
5	Distance between Manhole 1 to Manhole '0'	302	See Assumption 8
6	Total Expense from Manhole 1 to Manhole '0'	$410.72	Line 4 X Line 5
7	% Weighting	90%	See Assumption 10
8	Total Expense from Manhole 1 to Manhole '0' weighted	$369.65	Line 6 X Line 7
9	Pulling Fiber from POI to Manhole '0'	$1.36	See Direct Expense/Investment 9
10	Distance between POI and Manhole '0'	50	See Assumption 1
11	Total Expense from POI and Manhole '0'	$68.00	Line 9 X Line 10
12	% Weighting	10%	See Assumption 9
13	Total Expense from POI and Manhole '0'	$6.80	Line 11 X Line 12
14	Total Pull Fiber Expense	$523.33	Line 3 + Line 8 + Line 13
	Cable		
1	Cable Expense	$1.23	See Direct Expense/Investment 11
2	Cable Placement Per Ft	$2.39	See Direct Expense/Investment 19
3	Number of Feet	150	See Assumption 13
4	Number of Fibers per Collocator	18	See Assumption 2
5	Cable Expense per Fiber	$30.13	Line 1 + Line 2 X Line 3 / Line 4
	Cable Rack		
1	Cable Rack Expense	$191.68	See Direct Expense/Investment 12
2	Number of Feet	20	See Assumption 11
3	Number of Collocators per Cable Rack	3	See Assumption 3
4	Number of Fibers per Collocator	18	See Assumption 2
5	Cable Rack Expense per Fiber	$70.99	Line 1 X Line 2 / Line 3 / Line 4
	Fiber Distribution Panel		
1	Fiber Distribution Panel Expense	$1,473.38	See Direct Expense/Investment 15

Version 1.0 Created 7/12/01, 4:35:46 PM						
South Dakota						
	STANDARD SHARED ENTRANCE ENCLOSURE					
2	Number of Fibers Per Collocator	18	See Assumption 2			
3	Fiber Distribution Panel Expense per Fiber	$81.85	Line 1/Line 2			
	Single Fiber Jumper					
1	Single Fiber Jumper per Fiber	$132.05	See Direct Expense/Investment 16			
	Attenuator					
1	Attenuator Expense per Fiber	$0.00	See Direct Expense/Investment 17			
	Core Drill					
1	Core Drill Expense per Drill	$112.00	See Direct Expense/Investment 18			
2	Core Drills required per POI	2	See Assumption 4			
3	Total Core Drill Expense for POI	$224.00	Line 1 X Line 2			
4	% Weighting	10%	See Assumption 9			
5	Total Expense For POI	$22.40	Line 3 X Line 4			
6	Number of Core Drill Expense per Manhole 1	1				
7	Total Core Drill Expense for Manhole 1	$112.00	Line 1 X Line 6			
8	% Weighting	90%	See Assumption 10			
9	Total Expense for Manhole 1	$100.80	Line 7 X Line 8			
10	Number of Core Drill Expense per Manhole 0	1				
11	Total Core Drill Expense for Manhole 0	$112.00	Line 1 X Line 10			
12	Total Core Drill Expense	$235.20	Line 5 + Line 9 + Line 11			
13	Number of Collocators per Central Office	3	See Assumption 3			
14	Number of Fibers Per Collocator	18	See Assumption 2			
15	Core Drill Expense per Fiber	$4.36	Line 12/Line 13/Line 14			
	Fiber Cable Splicing					
1	Fiber Cable Splicing - per Setup	$387.69	See Direct Expense/Investment 13			
2	Number of Splices per Collocator	18	See Assumption 2			
3	Total Fiber Cable Splicing Setup per Collocator	$21.54	Line 1/Line 2			
4	Fiber Cable Splicing - per Fiber Spliced	$16.32	See Direct Expense/Investment 14			
5	Total Fiber Cable Splicing	$37.86	Line 4 + Line 5			
6	Number of Splices per Fiber	2	See Assumption 5			
7	Total Fiber Cable Splicing per Fiber	$75.72	Line 7 X Line 8			
Investment						
	Manhole '0'					
1	Utility Hole Expense	$6,853.44	See Direct Expense/Investment 2			
2	Cut and Replace Road Covering	$2,089.14	See Direct Expense/Investment 3			
3	Backfill Utility Hole	$816.60	See Direct Expense/Investment 5			
4	Total Utility Hole Expense	$9,759.17	Line 1 + Line 2 + Line 3			
5	Capacity	50				
6	Total Utility Hole Investment per Capacity	$195.18	Line 4/Line 5			
7	Number of Collocators per Utility Hole	3	See Assumption 3			
8	Number of Fibers per Collocator	18	See Assumption 2			
9	Utility Hole Expense Per Fiber	$3.61	Line 6/Line 7/Line 8			

Version 1.0 Created 7/12/01, 4:35:46 PM			
South Dakota			
	STANDARD SHARED ENTRANCE ENCLOSURE		
	Manhole 1		
1	Utility Hole Expense	$6,853.44	See Direct Expense/Investment 2
2	Cut and Replace Road Covering	$2,089.14	See Direct Expense/Investment 3
3	Backfill Utility Hole	$816.60	See Direct Expense/Investment 5
4	Total Utility Hole Expense	$9,759.17	Line 1 + Line 2 + Line 3
5	Capacity	20	
6	Total Utility Hole Investment per Capacity	$487.96	Line 4/Line 5
7	Number of Collocators per Utility Hole	3	See Assumption 3
8	Number of Fibers per Collocator	18	See Assumption 2
9	Utility Hole Expense Per Fiber	$9.04	Line 6/Line 7/Line 8
10	% Weighting	90%	See Assumption 10
11	Total Utility Hole Expense per Fiber	$8.13	Line 9 X Line 10
	Conduit (Manhole '0' and Cable Vault)		
1	Conduit Investment per Foot	$22.85	See Direct Expense/Investment 7
2	Cut and Replace Concrete per Trench Foot	$13.06	See Direct Expense/Investment 4
3	Backfill Conduit Trench per Trench Foot	$5.21	See Direct Expense/Investment 6
4	Total Conduit Investments per Foot	$41.12	Line 1 + Line 2 + Line 3
5	Distance between Manhole '0' and Cable Vault	108	See Assumptions 7
6	Total Conduit Investment	$4,440.64	Line 4 X Line 5
7	Number of Collocators per Conduit	3	See Assumption 3
8	Number of Fibers per Collocator	18	See Assumption 2
9	Conduit Investment per Fiber	$82.23	Line 6/Line 7/Line 8
	Conduit (Manhole 1 and Manhole '0')		
1	Conduit Investment per Foot	$22.85	See Direct Expense/Investment 7
2	Cut and Replace Concrete per Trench Foot	$13.06	See Direct Expense/Investment 4
3	Backfill Conduit Trench per Trench Foot	$5.21	See Direct Expense/Investment 6
4	Total Conduit Investments per Foot	$41.12	Line 1 + Line 2 + Line 3
5	Distance between Manhole 1 and Manhole '0'	302	See Assumptions 8
6	Total Conduit Investment	$12,417.34	Line 4 X Line 5
7	Number of Collocators per Conduit	3	See Assumption 3
8	Number of Fibers per Collocator	18	See Assumption 2
9	Conduit Investment per Fiber	$229.95	Line 6/Line 7/Line 8
10	% Weighting	90%	See Assumption 10
11	Total Conduit Investment Per Fiber	$206.96	Line 9 X Line 10
	Innerduct (Manhole '0' to Cable Vault)		
1	Innerduct Investment per Foot	$2.81	See Direct Expense/Investment 10
2	Distance between Manhole '0' to Cable Vault	108	See Assumption 7
3	Total Innerduct Investment	$303.48	Line 1 X Line 2
4	Number of Fibers per Collocator	18	See Assumption 2
5	Innerduct Investment per Fiber	$16.86	Line 3/Line 4
	Innerduct (Manhole 1 to Manhole '0')		
1	Innerduct Investment per Foot	$2.81	See Direct Expense/Investment 10

Version 1.0 Created 7/12/01, 4:35:46 PM			
South Dakota			
	STANDARD SHARED ENTRANCE ENCLOSURE		
2	Distance between Manhole '0' to Cable Vault	302	See Assumption 8
3	Total Innerduct Investment	$848.63	Line 1 X Line 2
4	Number of Fibers per Collocator	18	See Assumption 2
5	Innerduct Investment per Fiber	$47.15	Line 3/Line 4
6	% Weighting	90%	See Assumption 10
7	Total Innerduct Investment per Fiber	$42.43	Line 5 X Line 6
	Core Drill		
1	Core Drill Investment per Drill	$112.00	See Direct Expense/Investment 18
2	Number of Core Drill Investment per Manhole 1	1	
3	Total Core Drill Investment for Manhole 1	$112.00	Line 1 X Line 6
4	% Weighting	90%	See Assumption 10
5	Total Investment for Manhole 1	$100.80	Line 7 X Line 8
6	Number of Core Drill Investment per Manhole 0	1	
7	Total Core Drill Investment for Manhole 0	$112.00	Line 1 X Line 10
8	Total Core Drill Investment	$212.80	Line 5 + Line 9 + Line 11
9	Number of Collocators per Central Office	3	See Assumption 3
10	Number of Fibers Per Collocator	18	See Assumption 2
11	Core Drill Investment per Fiber	$3.94	Line 12/Line 13/Line 14
	Cable Rack		
1	Cable Rack Expense	$191.68	See Direct Expense/Investment 12
2	Number of Feet	130	See Assumption 12
3	Number of Fiber Cables per Cable Rack	80	
4	Number of Fibers per Collocator	18	See Assumption 2
5	Cable Rack Expense per Fiber	$17.30	Line 1 X Line 2 / Line 3 / Line 4
Total Expense by FRC			
	4C		
1	Utility Hole Expense Per Fiber	$18.07	See Utility Hole 9
2	Conduit Expense Per Fiber	$3.81	See Conduit 11
3	Innerduct Expense Per Fiber	$3.94	See Innerduct 11
4	Core Drill Expense Per Fiber	$4.36	See Core Drill 15
5	Pull Fiber Expense Per Fiber	$29.07	See Pull Fiber 14
	Total Expense for FRC 4C	**$59.24**	Line 1 + Line 2 + Line 3 + Line 4
	85C		
1	Cable Expense per Fiber (POI to Manhole '0')	$0.31	See Cable (POI to Manhole '0') 6
4	Cable Expense per Fiber (Manhole '0' to Manhole Cable Vault)	$6.59	See Cable (Manhole 0 to Cable Vault) 4
7	Cable Expense per Fiber (Manhole 1 to Manhole '0')	$16.59	See Cable (Manhole 1 to Manhole '0') 6
8	Fiber Cable Splicing Per Fiber	$75.72	See Fiber Cable Splicing 7

Version 1.0 Created 7/12/01, 4:35:46 PM			
South Dakota			
	STANDARD SHARED ENTRANCE ENCLOSURE		
	Total Expense for FRC 85C	**$99.20**	Line 3 + Line 6 + Line 7 + Line 8
	257C		
1	Cable Expense per Fiber	$30.13	See Cable 4
2	Cable Rack Expense per Fiber	$70.99	See Cable Rack 5
	Total Expense for FRC 257C	**$101.12**	Line 1 + Line 2
	357C		
1	Fiber Distribution Panel Expense per Fiber	$81.85	See Fiber Distribution Panel 3
2	Single Fiber Jumper per Fiber	$132.05	See Single Fiber Jumper 1
3	Attenuator per Fiber	$0.00	See Attenuator 1
	Total Expense for FRC 357C	**$213.90**	Line 1 + Line 2 + Line 3
Total Investment by FRC			
	4C		
1	Manhole '0' Investment Per Fiber	$3.61	See Manhole '0' 9 p.132
2	Conduit (Manhole '0' to Cable Vault)Investment per Fiber	$82.23	See Conduit (Manhole '0' to Cable Vault) 9 p.132
3	Innerduct (Manhole '0' to Cable Vault) Investment per Fiber	$16.86	See Innerduct (Manhole '0' to Cable Vault) 5 p.133
4	Manhole 1 Investment Per Fiber	$8.13	See Manhole 1 11 p.132
5	Conduit (Manhole 1 to Manhole '0')Investment per Fiber	$206.96	See Conduit (Manhole 1 to Manhole '0') 7 p.133
6	Innerduct (Manhole 1 to Manhole '0') Investment per Fiber	$42.43	See Innerduct (Manhole 1 to Manhole '0') 7 p.133
7	Core Drill Investment per Fiber	$3.94	See Core Drill 11 p.134
	Total Investment for FRC 4C	**$364.17**	Line 1 + Line 2 + Line 3 + Line 4 + Line 5 + Line 6 + Line 7
	257C		
1	Cable Racking (Shared)	$17.30	See Cable Rack 5
	Total Investment for FRC 257C	**$17.30**	Line 1

Cell: A27
Comment: Defaults were provided by product management team

Version 1.0 Created 7/12/01, 4:35:46 PM				
South Dakota				
CROSS CONNECT ENTRANCE FACILITY				
DIRECT EXPENSES				
	Collocation Entrance Facility	1998 Expense	Expense X Sales Tax	FRC Code
1	Fiber Cable Per Ft. Expense	$1.04	$1.10	85C
2	Utility Hole Expense	$6,487.54	$6,853.44	4C
3	Cut & Replace Road Covering - Utility Hole	$1,977.60	$2,089.14	4C
4	Cut & Replace Concrete Per Trench Ft. - Conduit	$12.36	$13.06	4C
5	Backfill Utility Hole	$816.60	$816.60	4C
6	Backfill Conduit Trench Per Trench Ft.	$5.21	$5.21	4C
7	Conduit Expense Per Ft.	$21.63	$22.85	4C
8	Expense for Pumping Utility Hole	$499.96	$499.96	4C
9	Per Ft. Expense for Pulling Fiber in Conduit	$1.36	$1.36	4C
10	Innerduct Per Ft.	$2.66	$2.81	4C
11	Fiber Cable Per Ft.	$1.16	$1.23	257C
12	Fiber Cable Racking Per Ft	$181.45	$191.68	257C
13	Fiber Cable Splicing - Per Setup	$366.99	$387.69	85C
14	Fiber Cable Splicing - Per Fiber Spliced	$16.32	$16.32	85C
15	Fiber Distribution Panel	$1,394.72	$1,473.38	357C
16	Single Fiber Jumper	$125.00	$132.05	357C
17	Attenuator Per Fiber	$0.00	$0.00	357C
18	Core Drill	$112.00	$112.00	4C
19	Placing Fiber Cable on Cable Racking Per Ft	$2.39	$2.39	257C
ASSUMPTIONS				
1	Distance from POI to USW Manhole '0' (feet)	50		
2	Fibers required per Collocator	18		
3	Collocators per Utility Hole/Conduit/CO	3		
4	Core Drills per Manhole	2		
5	Number of Fiber Splice Setup	2		
6	Number of fibers spliced per CLEC	18		
7	Number of Fiber Distribution Panel	2		
8	Distance from Manhole '0' to Cable Vault	108		
9	Distance between Manhole 1 and Manhole '0'	302		
10	Weighting Use of POI	10%		
11	Weighting of use of Existing Manhole = (1-%POI)	90%		
12	Distance of New Cable Racking	20		
13	Distance of Shared Cable Racking	130		
14	Distance from Cable Vault to CLEC Space	150		

Version 1.0 Created 7/12/01, 4:35:46 PM			
South Dakota			
CROSS CONNECT ENTRANCE FACILITY			
CALCULATIONS			
	Utility Hole - POI		
1	Utility Hole Expense	$6,853.44	See Direct Expense 2
2	Cut and Replace Road Covering	$2,089.14	See Direct Expense 3
3	Backfill Utility Hole	$816.60	See Direct Expense 5
4	Total Utility Hole Expense	$9,759.17	Line 1 + Line 2 + Line 3
5	Number of Collocators per Utility Hole	3	See Assumption 3
6	Number of Fibers per Collocator	18	See Assumption 2
7	Utility Hole Expense Per Fiber	$180.73	Line 4/Line 5/Line 6
8	% Weighting	10%	See Assumption 10
9	Total Utility Hole Expense	$18.07	Line 7 X Line 8
	Conduit - POI		
1	Conduit Expense per Foot	$22.85	See Direct Expense 7
2	Cut and Replace Concrete per Trench Foot	$13.06	See Direct Expense 4
3	Backfill Conduit Trench per Trench Foot	$5.21	See Direct Expense 6
4	Total Conduit Expenses per Foot	$41.12	Line 1 + Line 2 + Line 3
5	Distance between POI and USW Manhole '0'	50	See Assumptions 1
6	Total Conduit Expense	$2,055.85	Line 4 X Line 5
7	Number of Collocators per Conduit	3	See Assumption 3
8	Number of Fibers per Collocator	18	See Assumption 2
9	Conduit Expense per Fiber	$38.07	Line 6/Line 7/Line 8
10	% Weighting	10%	See Assumption 10
11	Total Utility Hole Expense	$3.81	Line 9 X Line 10
	Innerduct - POI		
1	Innerduct Expense per Foot	$2.81	See Direct Expense 10
2	Pull Fiber from Utility Hole to Cable Vault Per Foot	$1.36	See Direct Expense 9
3	Total Innerduct Expense Per Foot	$4.17	Line 1 + Line 2
4	Distance between POI and USW Manhole '0'	50	See Assumption 1
5	Total Innerduct Expense	$208.50	Line 3 X Line 4
6	Pump Utility Hole Expense	$499.96	See Direct Expense 8
7	Total Expenses	$708.46	Line 5 + Line 6
8	Number of Fibers per Collocator	18	See Assumption 2
9	Cable and Innerduct Expense per Fiber	$39.36	Line 7/Line 8
10	% Weighting	10%	See Assumption 10
11	Total Utility Hole Expense	$3.94	Line 10 X Line 11
	Outside Cable (POI to Manhole '0')		
1	Fiber Cable Expense per Foot	$1.10	See Direct Expense 1
2	Distance between POI and USW Manhole '0'	50	See Assumption 1
3	Number of Fibers per Collocator	18	See Assumption 2
4	Cable Expense per Fiber	$3.05	(Line 1 X Line 2)/Line 3
5	% Weighting	10%	See Assumption 10
6	Total Utility Hole Expense	$0.31	Line 4 X Line 5

Version 1.0 Created 7/12/01, 4:35:46 PM			
South Dakota			
	CROSS CONNECT ENTRANCE FACILITY		
	Outside Cable (Manhole '0' to Cable Vault)		
1	Fiber Cable Expense per Foot	$1.10	See Direct Expense 1
2	Distance between POI and USW Manhole '0'	108	See Assumption 7
3	Number of Fibers per Collocator	18	See Assumption 2
4	Cable Expense per Fiber	$6.59	(Line 1 X Line 2)/Line 3
	Outside Cable (Manhole 1 to Manhole '0')		
1	Fiber Cable Expense per Foot	$1.10	See Direct Expense 1
2	Distance between POI and USW Manhole '0'	302	See Assumption 1
3	Number of Fibers per Collocator	18	See Assumption 2
4	Cable Expense per Fiber	$18.43	(Line 1 X Line 2)/Line 3
5	% Weighting	90%	See Assumption 11
6	Total Utility Hole Expense	$16.59	Line 4 X Line 5
	Pulling Fiber		
1	Pulling Fiber from Manhole '0' to Cable Vault	$1.36	See Direct Expense/Investment 9
2	Distance between Manhole '0' and Cable Vault	108	See Assumption 7
3	Total Expense from Manhole '0' to Cable Vault	$146.88	Line 1 X Line 2
4	Pulling Fiber from Manhole 1 to Manhole '0'	$1.36	See Direct Expense/Investment 9
5	Distance between Manhole 1 to Manhole '0'	302	See Assumption 8
6	Total Expense from Manhole 1 to Manhole '0'	$410.72	Line 4 X Line 5
7	% Weighting	90%	See Assumption 11
8	Total Expense from Manhole 1 to Manhole '0' weighted	$369.65	Line 6 X Line 7
9	Pulling Fiber from POI to Manhole '0'	$1.36	See Direct Expense/Investment 9
10	Distance between POI and Manhole '0'	50	See Assumption 1
11	Total Expense from POI and Manhole '0'	$68.00	Line 9 X Line 10
12	% Weighting	10%	See Assumption 10
13	Total Expense from POI and Manhole '0'	$6.80	Line 11 X Line 12
14	Total Pull Fiber Expense	$523.33	Line 3 + Line 8 + Line 13
	Cable		
1	Cable Expense	$1.23	See Direct Expense 11
2	Cable Placement Per Ft	$2.39	See Direct Expense/Investment 19
3	Number of Feet	150	See Assumption 14
4	Number of Fibers per Collocator	18	See Assumption 2
5	Cable Expense per Fiber	$30.13	Line 1/Line 2
	Cable Rack		
1	Cable Rack Expense	$191.68	See Direct Expense 12
2	Number of Feet	20	See Assumption 13
3	Number of Collocators per Cable Rack	3	See Assumption 3
4	Number of Fibers per Collocator	18	See Assumption 2
5	Cable Rack Expense per Fiber	$70.99	Line 1/Line 2/Line 3

Version 1.0 Created 7/12/01, 4:35:46 PM			
South Dakota			
	CROSS CONNECT ENTRANCE FACILITY		
	Fiber Distribution Panel		
1	Fiber Distribution Panel Expense	$1,473.38	See Direct Expense 15
2	Number of Fiber Distribution Panels	2	See Assumption 7
3	Total Fiber Distribution Panel Expense	$2,946.76	Line 1 X Line 2
4	Number of Fibers Per Collocator	18	See Assumption 2
5	Fiber Distribution Panel Expense per Fiber	$163.71	Line 3/Line 4
	Single Fiber Jumper		
1	Single Fiber Jumper per Fiber	$132.05	See Direct Expense 16
	Attenuator		
1	Attenuator Expense per Fiber	$0.00	See Direct Expense 17
	Core Drill		
1	Core Drill Expense per Drill	$112.00	See Direct Expense/Investment 18
2	Core Drills required per POI	2	See Assumption 4
3	Total Core Drill Expense for POI	$224.00	Line 1 X Line 2
4	% Weighting	10%	See Assumption 10
5	Total Expense For POI	$22.40	Line 3 X Line 4
6	Number of Core Drill Expense per Manhole 1	1	
7	Total Core Drill Expense for Manhole 1	$112.00	Line 1 X Line 6
8	% Weighting	90%	See Assumption 11
9	Total Expense for Manhole 1	$100.80	Line 7 X Line 8
10	Number of Core Drill Expense per Manhole 0	1	
11	Total Core Drill Expense for Manhole 0	$112.00	Line 1 X Line 10
12	Total Core Drill Expense	$235.20	Line 5 + Line 9 + Line 11
13	Number of Collocators per Central Office	3	See Assumption 3
14	Number of Fibers Per Collocator	18	See Assumption 2
15	Core Drill Expense per Fiber	$4.36	Line 12/Line 13/Line 14
	Fiber Cable Splicing		
1	Fiber Cable Splicing - per Setup	$387.69	See Direct Expense 13
2	Number of Splices per Fiber	18	See Assumption 5
3	Total Fiber Cable Splicing Setup per Collocator	$21.54	Line 1/Line 2
4	Fiber Cable Splicing - per Fiber Spliced	$16.32	See Direct Expense 14
5	Total Fiber Cable Splicing	$37.86	Line 4 + Line 5
6	Number of Splices per Fiber	2	See Assumption 5
7	Total Fiber Cable Splicing per Fiber	$75.72	Line 7 X Line 8

Version 1.0 Created 7/12/01, 4:35:46 PM			
South Dakota			
CROSS CONNECT ENTRANCE FACILITY			
Investment			
	Manhole '0'		
1	Utility Hole Expense	$6,853.44	See Direct Expense/Investment 2
2	Cut and Replace Road Covering	$2,089.14	See Direct Expense/Investment 3
3	Backfill Utility Hole	$816.60	See Direct Expense/Investment 5
4	Total Utility Hole Expense	$9,759.17	Line 1 + Line 2 + Line 3
5	Capacity	50	
6	Total Utility Hole Investment per Capacity	$195.18	Line 4/Line 5
7	Number of Collocators per Utility Hole	3	See Assumption 3
8	Number of Fibers per Collocator	18	See Assumption 2
9	Utility Hole Expense Per Fiber	$3.61	Line 6/Line 7/Line 8
	Manhole 1		
1	Utility Hole Expense	$6,853.44	See Direct Expense/Investment 2
2	Cut and Replace Road Covering	$2,089.14	See Direct Expense/Investment 3
3	Backfill Utility Hole	$816.60	See Direct Expense/Investment 5
4	Total Utility Hole Expense	$9,759.17	Line 1 + Line 2 + Line 3
5	Capacity	20	
6	Total Utility Hole Investment per Capacity	$487.96	Line 4/Line 5
7	Number of Collocators per Utility Hole	3	See Assumption 3
8	Number of Fibers per Collocator	18	See Assumption 2
9	Utility Hole Expense Per Fiber	$9.04	Line 6/Line 7/Line 8
10	% Weighting	90%	See Assumption 11
11	Total Utility Hole Expense per Fiber	$8.13	Line 9 X Line 10
	Conduit (Manhole '0' and Cable Vault)		
1	Conduit Investment per Foot	$22.85	See Direct Expense/Investment 7
2	Cut and Replace Concrete per Trench Foot	$13.06	See Direct Expense/Investment 4
3	Backfill Conduit Trench per Trench Foot	$5.21	See Direct Expense/Investment 6
4	Total Conduit Investments per Foot	$41.12	Line 1 + Line 2 + Line 3
5	Distance between Manhole '0' and Cable Vault	108	See Assumptions 7
6	Total Conduit Investment	$4,440.64	Line 4 X Line 5
7	Number of Collocators per Conduit	3	See Assumption 3
8	Number of Fibers per Collocator	18	See Assumption 2
9	Conduit Investment per Fiber	$82.23	Line 6/Line 7/Line 8

Version 1.0 Created 7/12/01, 4:35:46 PM			
South Dakota			
	CROSS CONNECT ENTRANCE FACILITY		
	Conduit (Manhole 1 and Manhole '0')		
1	Conduit Investment per Foot	$22.85	See Direct Expense/Investment 7
2	Cut and Replace Concrete per Trench Foot	$13.06	See Direct Expense/Investment 4
3	Backfill Conduit Trench per Trench Foot	$5.21	See Direct Expense/Investment 6
4	Total Conduit Investments per Foot	$41.12	Line 1 + Line 2 + Line 3
5	Distance between Manhole 1 and Manhole '0'	302	See Assumptions 9
6	Total Conduit Investment	$12,417.34	Line 4 X Line 5
7	Number of Collocators per Conduit	3	See Assumption 3
8	Number of Fibers per Collocator	18	See Assumption 2
9	Conduit Investment per Fiber	$229.95	Line 6/Line 7/Line 8
10	% Weighting	90%	See Assumption 11
11	Total Conduit Investment Per Fiber	$206.96	Line 9 X Line 10
	Innerduct (Manhole '0' to Cable Vault)		
1	Innerduct Investment per Foot	$2.81	See Direct Expense/Investment 10
2	Distance between Manhole '0' to Cable Vault	108	See Assumption 8
3	Total Innerduct Investment	$303.48	Line 1 X Line 2
4	Number of Fibers per Collocator	18	See Assumption 2
5	Innerduct Investment per Fiber	$16.86	Line 3/Line 4
	Innerduct (Manhole 1 to Manhole '0')		
1	Innerduct Investment per Foot	$2.81	See Direct Expense/Investment 10
2	Distance between Manhole '0' to Cable Vault	302	See Assumption 8
3	Total Innerduct Investment	$848.63	Line 1 X Line 2
4	Number of Fibers per Collocator	18	See Assumption 2
5	Innerduct Investment per Fiber	$47.15	Line 3/Line 4
6	% Weighting	90%	See Assumption 10
7	Total Innerduct Investment per Fiber	$42.43	Line 5 X Line 6
	Core Drill		
1	Core Drill Investment per Drill	$112.00	See Direct Expense/Investment 18
2	Number of Core Drill Investment per Manhole 1	1	
3	Total Core Drill Investment for Manhole 1	$112.00	Line 1 X Line 2
4	% Weighting	90%	See Assumption 10
5	Total Investment for Manhole 1	$100.80	Line 3 X Line 4
6	Number of Core Drill Investment per Manhole 0	1	
7	Total Core Drill Investment for Manhole 0	$112.00	Line 1 X Line 6
8	Total Core Drill Investment	$212.80	Line 5 + Line 9
9	Number of Collocators per Central Office	3	See Assumption 3
10	Number of Fibers Per Collocator	18	See Assumption 2
11	Core Drill Investment per Fiber	$3.94	Line 8/Line 9/Line 10

Version 1.0 Created 7/12/01, 4:35:46 PM			
South Dakota			
CROSS CONNECT ENTRANCE FACILITY			
	Cable Rack		
1	Cable Rack Expense	$191.68	See Direct Expense/Investment 12
2	Number of Feet	130	See Assumption 12
3	Number of Fiber Cables per Cable Rack	80	
4	Number of Fibers per Collocator	18	See Assumption 2
5	Cable Rack Expense per Fiber	$17.30	Line 1 X Line 2 / Line 3 / Line 4
Total Expense by FRC			
	4C		
1	Utility Hole Expense Per Fiber	$18.07	See Utility Hole 9
2	Conduit Expense Per Fiber	$3.81	See Conduit 11
3	Innerduct Expense Per Fiber	$3.94	See Innerduct 11
4	Core Drill Expense Per Fiber	$4.36	See Core Drill 15
5	Pull Fiber Expense Per Fiber	$29.07	See Pull Fiber 14
	Total Expense for FRC 4C	**$59.24**	Line 1+Line 2+Line 3+Line 4+Line 5
	85C		
1	Cable Expense per Fiber (POI to Manhole '0')	$0.31	See Cable (POI to Manhole '0') 6
2	Cable Expense per Fiber (Manhole '0' to Manhole Cable Vault)	$6.59	See Cable (Manhole 0 to Cable Vault) 4
3	Cable Expense per Fiber (Manhole 1 to Manhole '0')	$16.59	See Cable (Manhole 1 to Manhole '0') 6
4	Fiber Cable Splicing Per Fiber	$75.72	See Fiber Cable Splicing 7
	Total Expense for FRC 85C	**$99.20**	Line 1+Line 2+Line 3+Line 4
	257C		
1	Cable Expense per Fiber	$30.13	See Cable 4
2	Cable Rack Expense per Fiber	$70.99	See Cable Rack 5
	Total Expense for FRC 257C	**$101.12**	Line 1 + Line 2
	357C		
1	Fiber Distribution Panel Expense per Fiber	$163.71	See Fiber Distribution Panel 3
2	Single Fiber Jumper per Fiber	$132.05	See Single Fiber Jumper 1
3	Attenuator per Fiber	$0.00	See Attenuator 1
	Total Expense for FRC 357C	**$295.76**	Line 1 + Line 2 + Line 3

Version 1.0 Created 7/12/01, 4:35:46 PM			
South Dakota			
CROSS CONNECT ENTRANCE FACILITY			
Total Investment by FRC			
	4C		
1	Manhole '0' Investment Per Fiber	$3.61	See Manhole '0' 9
2	Conduit (Manhole '0' to Cable Vault)Investment per Fiber	$82.23	See Conduit (Manhole '0' to Cable Vault) 9
3	Innerduct (Manhole '0' to Cable Vault) Investment per Fiber	$16.86	See Innerduct (Manhole '0' to Cable Vault) 5
4	Manhole 1 Investment Per Fiber	$8.13	See Manhole 1 11
5	Conduit (Manhole 1 to Manhole '0')Investment per Fiber	$206.96	See Conduit (Manhole 1 to Manhole '0') 7
6	Innerduct (Manhole 1 to Manhole '0') Investment per Fiber	$42.43	See Innerduct (Manhole 1 to Manhole '0') 7
7	Core Drill Investment per Fiber	$3.94	See Core Drill 11 p.134
	Total Investment for FRC 4C	**$364.17**	Line 1 + Line 2 + Line 3 + Line 4 + Line 5 + Line 6 + Line 7
	257C		
1	Cable Racking (Shared)	$17.30	See Cable Rack 5
	Total Investment for FRC 257C	**$17.30**	Line 1

Cell: A27
Comment: Defaults were provided by product management team

Version 1.0 Created 7/12/01, 4:35:46 PM				
South Dakota				
DEDICATED EXPRESS FIBER (CLEC PROVIDES FIRE RATED CABLE)				
DIRECT EXPENSES				
	Collocation Entrance Facility	1998 Expense	Expense X Sales Tax	FRC Code
1	Utility Hole Expense	$6,487.54	$6,853.44	4C
2	Cut & Replace Road Covering - Utility Hole	$1,977.60	$2,089.14	4C
3	Cut & Replace Concrete Per Trench Ft. - Conduit	$12.36	$13.06	4C
4	Backfill Utility Hole	$816.60	$816.60	4C
5	Backfill Conduit Trench Per Trench Ft.	$5.21	$5.21	4C
6	Conduit Expense Per Ft.	$21.63	$22.85	4C
7	Expense for Pumping Utility Hole	$499.96	$499.96	4C
8	Per Ft. Expense for Pulling Fiber in Conduit	$1.36	$1.36	4C
9	Innerduct Per Ft.	$2.66	$2.81	4C
10	Core Drill	$112.00	$112.00	4C
11	Cable Rack Per Ft	$181.45	$191.68	257C
12	Placing Fiber on Cable Racking Per Ft.	$2.39	$2.39	257C
ASSUMPTIONS				
1	Distance from POI to Manhole '0' (feet)	50		
2	Core Drills per central office	2		
3	Collocators per Utility Hole/Conduit/CO	3		
4	Distance from POI to Cable Vault (feet)	150		
5	Distance for New Cable Racking	20		
6	Distance for Existing Cable Racking	130		
7	Distance from Manhole '0' to Cable Vault	108		
8	Distance between Manhole 1 and Manhole '0'	302		
9	Weighting Use of POI	10%		
10	Weighting of use of Existing Manhole = (1-%POI)	90%		
11	Distance of New Cable Racking	20		
12	Distance of Shared Cable Racking	130		
13	Distance from Cable Vault to CLEC Space	150		
CALCULATIONS				
	Utility Hole			
1	Utility Hole Expense	$6,853.44	See Direct Expense 1	
2	Cut and Replace Road Covering	$2,089.14	See Direct Expense 2	
3	Backfill Utility Hole	$816.60	See Direct Expense 4	
4	Total Utility Hole Expense	$9,759.17	Line 1 + Line 2 + Line 3	
5	Number of Collocators per Utility Hole	3	See Assumption 3	
6	Utility Hole Expense Per Collocator	$3,253.06	Line 4/Line 5	
7	% Weighting	10%	See Assumption 9	
8	Total Utility Hole Expense	$325.31	Line 6 * Line 7	

Version 1.0 Created 7/12/01, 4:35:46 PM			
South Dakota			
	DEDICATED EXPRESS FIBER (CLEC PROVIDES FIRE RATED CABLE)		
	Conduit - POI		
1	Conduit Expense per Foot	$22.85	See Direct Expense 6
2	Cut and Replace Concrete per Trench Foot	$13.06	See Direct Expense 3
3	Backfill Conduit Trench per Trench Foot	$5.21	See Direct Expense 5
4	Total Conduit Expenses per Foot	$41.12	Line 1 + Line 2 + Line 3
5	Distance between POI and USW Cable Vault	50	See Assumption 1
6	Total Conduit Expense	$2,055.85	Line 4 X Line 5
7	Number of Collocators per Conduit	3	See Assumption 3
8	Conduit Expense per Collocator	$685.28	Line 6/Line 7
9	% Weighting	10%	See Assumption 9
10	Total Conduit Expense	$68.53	Line 8 * Line 9
	Innerduct		
1	Innerduct Expense per Foot	$2.81	See Direct Expense 9
2	Pull Fiber from Utility Hole to Cable Vault Per Foot	$1.36	See Direct Expense 8
3	Total Innerduct Expense Per Foot	$4.17	Line 1 + Line 2
4	Distance between POI and USW Cable Vault	150	See Assumption 4
5	Total Innerduct Expense	$625.50	Line 3 x Line 4
6	Pump Utility Hole Expense	$499.96	See Direct Expense 7
7	Innerduct Expense per Collocator	$1,125.46	Line 5 + Line 6
8	% Weighting	10%	See Assumption 9
9	Total Innerduct Expense	$112.55	Line 7 * Line 8
	Pulling Fiber		
1	Pulling Fiber from Manhole '0' to Cable Vault	$1.36	See Direct Expense/Investment 9
2	Distance between Manhole '0' and Cable Vault	$108.00	See Assumption 7
3	Total Expense from Manhole '0' to Cable Vault	$146.88	Line 1 X Line 2
4	Pulling Fiber from Manhole 1 to Manhole '0'	$1.36	See Direct Expense/Investment 9
5	Distance between Manhole 1 to Manhole '0'	$302.00	See Assumption 8
6	Total Expense from Manhole 1 to Manhole '0'	$410.72	Line 4 X Line 5
7	Total Expense for Pulling Fiber	$557.60	Line 6 + Line 3
8	% Weighting	90%	See Assumption 10
9	Total Pull Fiber Expense	$501.84	Line 7 * Line 8
	Cable Rack		
1	Cable Rack Expense	$191.68	See Direct Expense 11
2	Number of Feet	20	See Assumption 5
3	Number of Collocators per Cable Rack	3	See Assumption 3
4	Cable Rack Expense per Collocator	$1,277.89	Line 1 X Line 2 / Line 3
	Core Drill		
1	Core Drill Expense per Drill	$112.00	See Direct Expense 14
2	Core Drills required per Central Office	2	See Assumption 2
3	Total Core Drill Expense	$224.00	Line 1 X Line 2
4	% Weighting	10%	See Assumption 9
5	Total Core Drill Expense for POI	$22.40	Line 3 * Line 4
6	Number of Core Drills in MH0	1	
7	Core Drill Expense per Drill	$112.00	See Direct Expense 14
8	% Weighting	90%	See Assumption 10
9	Total Core Drill Expense for MH0	$100.80	Line 7 * Line 8
10	Number of Core Drills in MH1	1	

Version 1.0 Created 7/12/01, 4:35:46 PM			
South Dakota			
	DEDICATED EXPRESS FIBER (CLEC PROVIDES FIRE RATED CABLE)		
11	Core Drill Expense per Drill	$112.00	See Direct Expense 14
12	% Weighting	90%	See Assumption 10
13	Total Core Drill Expense for MH1	$100.80	Line10 * Line 11 * Line 12
14	Total Core Drill Expense	$224.00	Line 5 + Line 9 + Line 13
15	Number of Collocators per Central Office	3	See Assumption 3
16	Core Drill Expense per Collocator	$74.67	Line 14 / Line 15
Investment			
	Cable Rack		
1	Cable Rack Investment	$191.68	See Direct Expense 11
2	Number of Feet	130	See Assumption 5
3	Number of Fiber Cables per Cable Rack	80	
4	Cable Rack per Cable	$311.49	Line 1 X Line 2 / Line 3
	Manhole '0'		
1	Utility Hole Expense	$6,853.44	See Direct Expense/Investment 2
2	Cut and Replace Road Covering	$2,089.14	See Direct Expense/Investment 3
3	Backfill Utility Hole	$816.60	See Direct Expense/Investment 5
4	Total Utility Hole Expense	$9,759.17	Line 1 + Line 2 + Line 3
5	Capacity	50	
6	Total Utility Hole Investment per Capacity	$195.18	Line 4/Line 5
7	Number of Collocators per Utility Hole	3	See Assumption 3
8	Utility Hole Expense Per Collocator	$65.06	Line 6/Line 7
9	% Weighting	90%	See Assumption 10
10	Total Utility Hole Expense	$58.56	Line 9 X Line 8
	Manhole 1		
1	Utility Hole Expense	$6,853.44	See Direct Expense/Investment 2
2	Cut and Replace Road Covering	$2,089.14	See Direct Expense/Investment 3
3	Backfill Utility Hole	$816.60	See Direct Expense/Investment 5
4	Total Utility Hole Expense	$9,759.17	Line 1 + Line 2 + Line 3
5	Capacity	20	
6	Total Utility Hole Investment per Capacity	$487.96	Line 4/Line 5
7	Number of Collocators per Utility Hole	3	See Assumption 3
9	Utility Hole Expense Per Fiber	$162.65	Line 6/Line 7
10	% Weighting	90%	See Assumption 10
11	Total Utility Hole Expense per Fiber	$146.39	Line 9 X Line 10
	Conduit (Manhole '0' and Cable Vault)		
1	Conduit Investment per Foot	$22.85	See Direct Expense/Investment 7
2	Cut and Replace Concrete per Trench Foot	$13.06	See Direct Expense/Investment 4
3	Backfill Conduit Trench per Trench Foot	$5.21	See Direct Expense/Investment 6
4	Total Conduit Investments per Foot	$41.12	Line 1 + Line 2 + Line 3
5	Distance between Manhole '0' and Cable Vault	108	See Assumptions 7
6	Total Conduit Investment	$4,440.64	Line 4 X Line 5
7	Number of Collocators per Conduit	3	See Assumption 3
8	Conduit Investment per Fiber	$1,480.21	Line 6/Line 7
9	% Weighting	90%	See Assumption 10
10	Total Conduit Investment per Fiber	$1,332.19	Line 9 X Line 8

Version 1.0 Created 7/12/01, 4:35:46 PM			
South Dakota			
DEDICATED EXPRESS FIBER (CLEC PROVIDES FIRE RATED CABLE)			
	Conduit (Manhole 1 and Manhole '0')		
1	Conduit Investment per Foot	$22.85	See Direct Expense/Investment 7
2	Cut and Replace Concrete per Trench Foot	$13.06	See Direct Expense/Investment 4
3	Backfill Conduit Trench per Trench Foot	$5.21	See Direct Expense/Investment 6
4	Total Conduit Investments per Foot	$41.12	Line 1 + Line 2 + Line 3
5	Distance between Manhole 1 and Manhole '0'	302	See Assumptions 8
6	Total Conduit Investment	$12,417.34	Line 4 X Line 5
7	Number of Collocators per Conduit	3	See Assumption 3
8	Number of Fibers per Collocator	$4,139.11	See Assumption 2
10	% Weighting	90%	See Assumption 10
11	Total Conduit Investment Per Fiber	$3,725.20	Line 9 X Line 10
	Innerduct (Manhole '0' to Cable Vault)		
1	Innerduct Investment per Foot	$2.81	See Direct Expense/Investment 10
2	Distance between Manhole '0' to Cable Vault	108	See Assumption 7
3	Total Innerduct Investment	$303.48	Line 1 X Line 2
4	% Weighting	90%	See Assumption 10
5	Innerduct Investment per Fiber	$273.13	Line 3 X Line 4
	Innerduct (Manhole 1 to Manhole '0')		
1	Innerduct Investment per Foot	$2.81	See Direct Expense/Investment 10
2	Distance between Manhole 1 to Manhole '0'	302	See Assumption 8
3	Total Innerduct Investment	$848.63	Line 1 X Line 2
4	% Weighting	90%	See Assumption 10
5	Total Innerduct Investment per Fiber	$763.76	Line 3 X Line 4
	Core Drill		
1	Core Drill Investment per Drill	$112.00	See Direct Expense/Investment 18
2	Number of Core Drill Investment per Manhole 1	1	
3	Total Core Drill Investment for Manhole 1	$112.00	Line 1 X Line 2
4	% Weighting	90%	See Assumption 10
5	Total Investment for Manhole 1	$100.80	Line 3 X Line 4
6	Number of Core Drill Investment per Manhole 0	1	
7	Total Core Drill Investment for Manhole 0	$112.00	Line 6 X Line 5
8	% Weighting	90%	See Assumption 10
9	Total Core Drill for MH0	$100.80	Line 7 X Line 8
10	Total Core Drill Investment	$201.60	Line 5 + Line 9
11	Number of Collocators per Central Office	3	See Assumption 3
12	Core Drill Investment per Fiber	$67.20	Line 10/Line 11

Version 1.0 Created 7/12/01, 4:35:46 PM			
South Dakota			
DEDICATED EXPRESS FIBER (CLEC PROVIDES FIRE RATED CABLE)			
Total Expense by FRC			
	4C		
1	Utility Hole Expense per Collocator	$3,253.06	See Utility Hole 6
2	Conduit Expense per Collocator	$685.28	See Conduit 8
3	Innerduct Expense per Collocator	$1,125.46	See Innerduct 7
4	Pulling Fiber	$501.84	See Pulling Fiber 9
5	Core Drill Expense per Collocator	$74.67	See Core Drill 16
	Total Expense for FRC 4C	**$5,640.31**	**Line 1 + Line 2 + Line 3 + Line 4 + Line 5**
	257C		
1	Cable Rack per Collocator	$1,277.89	See Cable Rack 4
	Total Expense for FRC 257C	**$1,277.89**	**Line 1**
Total Investment By FRC			
	4C		
1	Utility Hole Investment per Collocator	$204.94	See Utility Hole MH0 + MH1
2	Conduit Investment per Collocator	$5,057.40	See Conduit MH0 + MH1
3	Innerduct Investment per Collocator	$1,036.90	See Innerduct MH0 + MH1
4	Core Drill Investment per Collocator	$67.20	See Core Drill
	Total Investment for FRC 4C	**$6,366.44**	**Line 1 + Line 2 + Line 3 + Line 4**
	257C		
1	Cable Rack per Cable	$311.49	See Cable Rack 4
	Total Investment for FRC 257C	**$311.49**	**Line 1**

Cell: B15
Comment: 3 - 1 1/4"

	A	B	C
1	Version 1.0 Created 7/12/01, 4:35:46 PM		
2	South Dakota		
3	**Fiber Splicing**		
4		Input	Total including sales tax
5			
6	Per Site Setup	$344.00	$363.40
7			
8	Per Fiber Spliced	$27.50	$27.50

	A	B	C	D
1	**POWER USAGE**			
2				
3	**Expense**			
4	Version 1.0 Created 7/12/01, 4:35:46 PM			
5	South Dakota			
6	**100, 200, 300, & 400 Amp Cable**		**20, 30, 40, & 60 Amp Cable**	
7	Eqpt. electric usage	$25,048.30	Eqpt. electric usage	$25,048.30
8	A/C electricity to cool eqpt. heat	$13,650.69	A/C electricity to cool eqpt. heat	$13,650.69
9	Total Expense	$38,699.00	Total Expense	$38,699.00
10	DC Power Usage	1000	DC Power Usage	1000
11	Cost Per Amp Per Month	**$3.22**	Cost Per Amp Per Month	**$1.61**
12				
13	**Eqpt. electric usage**		**A/C electricity to cool eqpt. heat**	
14	Electricity Cost Per Kw/Hour	$0.0473	Base Kw	52
15	Base Kw	52	# of Hours in a Year	8760
16	# of Hours in a Year	8760	BTU's/hour Factor to Watts	3.41
17	rect./inv. eff. / pf	86%	Air-Conditioning Equivalency/BTU	12000
18			A/C Electric Usage	2.23
19			Electricity Cost Per KW/Hour	$0.0473
20			kW Conversion factor	1000
21	Total Cost	$25,048.30	Total Cost	$13,650.69

POWER EQUIPMENT

Investment

South Dakota

Version 1.0 Created 7/12/01, 4:35:46 PM

Equipment	< 60 Amps	>= 60 Amps
DC Plant	$405,055	$226,389
Engine/Alternators	$81,999	$81,999
Commercial AC	$40,835	$40,835
Total	$527,888	$349,222
DC Power Usage	1000	1000
Equipment Cost Per Amp	**$527.89**	**$349.22**

Power equipment less than 60 amps includes BDFB. Power Equipment greater than or equal to 60 amps excludes BDFB.

DC Plant

Equipment	equipment cost	vendor E&I cost	total installed cost	replacement parts
Rectifiers - 6, 200 A	$29,329	$15,811	$45,140	$1,466
Power Monitor	$15,262	$11,491	$26,752	$305
400 A BDFB	$45,233	$25,278	$176,277	$2,262
Power Boards & internal cabling	$44,492	$19,825	$64,316	$890
Batteries - 4 strgs., 1680 A-hrs.	$73,039	$12,786	$85,825	$1,461
Sales Tax				$360
Total Cost With BDFB			$398,311	$6,744
Total Cost Without BDFB			$222,034	$4,355

Engine/Alternator(s)

Equipment	equipment cost	E&I cost	total installed cost	parts, fuel, etc.
Engine/Alternator - 90 KW	$39,829	$12,200	$52,029	$1,991
Diesel Fuel Tank - 350 gal.	$4,614	$3,737	$8,351	
Eng./Alt. AC Distribution	$10,667	$8,640	$19,307	$320
Sales Tax	$3,108			
Total Cost	$58,218	$24,577	$79,687	$2,311

Commercial AC

Equipment	equipment cost	E&I cost	total installed cost	parts
Comm. AC Distribution	$22,314	$18,074	**$40,388**	$446
Sales Tax	$1,259			
Total Cost	$23,573	$18,074	**$40,388**	$446

Assumptions

	A	B	C	D	E	F
50						
51				CLEC pwr usage	50%	
52	base inverter KVA	10	KVA	ring plant size	100	VA
53	rect./inv. eff. / pf	86%		ring circuits	22	
54	DC power usage	1000	A	E&I default factor	1.81	
55	monitor circuits	$137	/mo.	350 gal fuel tank	$4,614	for 48+ hrs.
56	yearly monitoring	4	hrs.	CLECs fed from BDFB	100%	
57	A/C electric usage	2.23	KW/ton			

	A	B	C	D	E	F	G	H
1	Version 1.0 Created 7/12/01, 4:35:46 PM							
2	South Dakota							
3								
4	**Expense for Additional Backup AC Feed to equipment,**							
5	**in collocated space, from Backup AC Power Panel,**							
6	**Averaged for 5 actual sites**							
7								
8				**feed costs/ft.**				
9	Site	20 A, 1-ph	20 A, 3-ph	30 A, 1-ph	30 A, 3-ph	40 A, 1-ph	40 A, 3-ph	50 A, 1-ph
10								
11	Minneapolis	$8.37	$10.95	$8.62	$12.29	$9.94	$13.96	$11.12
12	Phoenix	$4.59	$5.58	$5.18	$7.17	$6.25	$8.65	$7.79
13	Salt Lake	$5.19	$6.35	$5.45	$7.13	$6.31	$8.62	$7.32
14	Seattle	$5.25	$6.30	$5.84	$7.91	$6.93	$9.40	$8.48
15	Denver	$5.51	$6.67	$6.10	$8.33	$7.23	$9.83	$8.79
16								
17	Average $/ft	**$5.78**	**$7.17**	**$6.24**	**$8.56**	**$7.33**	**$10.09**	**$8.70**
18								
19								
20	Site	50 A, 3-ph	60 A, 1-ph	60 A, 3-ph	100 A, 1-ph	100 A, 3-ph		
21								
22	Minneapolis	$15.46	$13.84	$19.85	$16.93	$27.58		
23	Phoenix	$11.09	$8.09	$11.56	$10.16	$15.63		
24	Salt Lake	$10.06	$9.28	$13.24	$11.55	$18.01		
25	Seattle	$11.84	$8.80	$12.36	$10.91	$16.55		
26	Denver	$12.28	$9.18	$12.90	$11.35	$17.32		
27								
28	Average $/ft	**$12.15**	**$9.84**	**$13.98**	**$12.18**	**$19.02**		
29								
30								
31	Assumptions							
32	base KW	52	KW					
33	base inverter KVA	10	KVA					
34	rectifier efficiency	0.86						
35	DC power usage	1000	A					
36	monitor circuits	137	/mo.					
37	yearly monitoring	4	hrs.					
38	A/C electric usage	2.23	KW/ton					
39	inflation/apprec. rate	0.02						
40	appreciated year	1998						
41	base cost year	1998						

	A	B	C	D	E	F
1	**Backup AC Power Usage**					
2	**Investment**					
3	Version 1.0 Created 7/12/01, 4:35:46 PM					
4	South Dakota	Investment	Rectifier Efficiency	Number of Volts	Watts to Kw Conversion	Investment Per Amp
5		A	B	C	D	E = ((A / B) * C / D
6	120 V	$2,153	86%	120	1000	**$300.37**
7	208 V, Single Phase	$2,153	86%	208	1000	**$520.64**
8	208 V, Three Phase	$2,153	86%	360	1000	**$900.70**
9	240 V, Single Phase	$2,153	86%	240	1000	**$600.74**
10	240 V, Three Phase	$2,153	86%	415	1000	**$1,039.27**
11	480 V, Three Phase	$2,153	86%	830	1000	**$2,078.55**
12						
13		Expense	Rectifier Efficiency	Number of Volts	Watts to Kw Conversion	Expense Per Amp
14		A	B	C	D	E = ((A / B) * C / D
15	120 V	$60	86%	120	1000	**$8.44**
16	208 V, Single Phase	$60	86%	208	1000	**$14.62**
17	208 V, Three Phase	$60	86%	360	1000	**$25.30**
18	240 V, Single Phase	$60	86%	240	1000	**$16.87**
19	240 V, Three Phase	$60	86%	415	1000	**$29.19**
20	480 V, Three Phase	$60	86%	830	1000	**$58.38**
21						
22						
23	**Engine/Alternator(s)**					
24						
25	**Equipment**	**equipment cost**	**E&I cost**	**total installed cost**	**parts, fuel, etc.**	
26						
27	Engine/Alternator - 90 KW	$39,829	$12,200	$52,029	$1,991	
28	Diesel Fuel Tank - 350 gal.	$4,614	$2,397	$7,011		
29	Eng./Alt. AC Distribution	$10,667	$5,542	$16,209	$320	
30	Sales Tax	$3,108			$130	
31	Total Cost	$58,218	$20,138	$75,248	$2,311	
32	Total Cost per kW			**$1,447.08**	**$44.45**	
33	**Commercial AC**					
34						
35	**Equipment**	**equipment cost**	**E&I cost**	**total installed cost**	**replacement parts**	
36						
37	Comm. AC Distribution	$22,314	$11,592	$33,906	$446	
38	Sales Tax	$1,259			$25	
39	Total Cost	$23,573	$11,592	$33,906	$471	
40	Total Cost per kW			**$652.04**	**$9.07**	

	A	B	C	D	E	F
41	**Usage**					
42	**Assumptions**					
43	Electricity Cost Per Kw-Hour	$0.0461	BTU's/hour Factor to Watts	3.41		
44	# of Hours in a Year	8760	Air-Conditioning Equivalency/BTU	12000		
45	rect./inv. eff. / pf	86%	A/C Electric Usage	2.23		
46	Months in a Year	12	kW Conversion factor	1000		
47	Eqpt. electric usage		$39.13			
48	A/C electricity to cool eqpt. heat		$21.33			
49						
50						
51	**Assumptions**					
52						
53	base KW	52	KW	CLEC pwr usage	50%	
54	base inverter KVA	10	KVA	ring plant size	100	VA
55	rect./inv. eff. / pf	86%		ring circuits	22	
56	DC power usage	1000	A	E&I default factor	1.5195	
57	monitor circuits	$137	/mo.	350 gal fuel tank	$4,614	for 48+ hrs.
58	yearly monitoring	4	hrs.	CLECs fed from BDFB	55%	
59	A/C electric usage	2.23	KW/ton			

	A	B	C	D	E	F
1	**Security Per Person**		Version 1.0 Created 7/12/01, 4:35:46 PM			
2			South Dakota			
3	**Investments**					
4			1998 INVESTMENT A	EMPLOYEES REQUIRING CARDS B	INVESTMENT PER PERSON C = A/B	
5						
6	ID CARDS	EQUIPMENT (Note 1)	$248,835.02			
7		SUPPLIES (Note 2)	$200,604.19			
8		MAINTENANCE	$28,910.00			
9		**Total**	$478,349.21	50,000	$9.57	
10						
11	CARD ACCESS	CONTROLLER	$7,000.00			
12		ADDITIONAL CARD READER	$3,000.00			
13		**TOTAL**	$10,000.00	40	250	
14						
15						
16	**DIRECT EXPENSE**					
17			HOURS PER BADGE A	LABOR RATE B	EXPENSE PER BADGE C = A x B	EXPENSE PER MONTH Note 3
18	ID CARDS					
19		HOURS FOR BADGING	0.25	$35.83	$8.96	**$0.41**
20						
21						
22						
23	**Physical Control Access Manager 1996 Actual Invoices					
24						
25	Notes:					
26	1. Equipment includes Server, 7 workstations, licensing of workstation, licensing of server, and 35 remote					
27	workstations					
28	2. Supplies include ribbon, top coat for badges, cleaner, hole punch, and cards					

	A	B	C	D	E
1	**CO SYNCHRONIZATION**				
2	SYNC-DCD523 Models				
3	Version 1.0 Created 7/12/01, 4:35:46 PM				
4	South Dakota			EF&I Expense	70% Fill
5					Expense/Port
6					
7	Model 1	(70 ports max)		$24,454.45	$332.75
8	Model 2	(100 ports max)		$15,308.45	$202.09
9	Model 3	(100 ports max)		$12,109.50	$156.39
10	Model 4	(100 ports max)		$9,053.66	$112.74
11	**Model 2 , most common**				
12					
13	**Avg. Expense/Port @ 70%**			**$202.09**	
14	**PRS Traceability Expense/Port**			**$10.71**	
15					
16	Power Expense/Month/Port			0.155	
17	Relay Rack Space			1.67	
18	Floor Space Rental/Month/Port			0.015	
19	Cable Racking			1.80	
20	Cabling to Network Element				
21	22 Ga. 2 Wire shielded cable			Wire Wrap	Connectorized
22	Expense/Foot			$0.15	$0.10
23	Average Run (ft)			200	200
24	Connector Assembly				$6.00
25	Install (hrs)			1.5	1.5
26	Install Expense/Hr			$39.61	$39.61
27	Total Install & Material Expense			$89.42	$85.42
28	**Avg. Expense/Install**			**$87.42**	
29					
30					
31	Expense for 1 CC or T1 port				
32	Avg. EF&I Expense/Equip/Port			$202.09	
33	Avg. Prs Expense			$10.71	
34	Avg. Expense, Cable Install to NE			$87.42	
35	RR Space			$1.67	
36	Cable Rack			$1.80	
37	**Total Expense/Port**			**$303.69**	

	A	B	C	D	E
1	**ITP**				
2	**Investment**				
3	Version 1.0 Created 7/12/01, 4:35:46 PM				
4	South Dakota	DS0	DS1	DS3	
5	ICDF Frame	$3,351.43	$5,429.37	$10,724.45	
6	Frame Capacity	40	18	8	
7	Frame Cost Per Unit	$83.79	$301.63	$1,340.56	
8	89 Block	$90.28			
9	DSX Panel		$553.82	$3,733.63	
10	Block/Panel Placement	$ 182.85	$ 125.16	$ 125.16	
11	Fill Factor	74%	73%	73%	
12	Capacity	100	56	24	
13	**Subtotal**	**$4.82**	**$23.99**	**$83.66**	
14					
15	COSMIC Frame	$47,538.00			
16	DSX Frame		$5,429.37	$10,724.45	
17	Capacity of Frames	1100	18	8	
18	Cost Per Unit of Frame	$43.22	$301.63	$1,340.56	
19	112 Block	$61.42			
20	DSX Panel		$553.81	$3,443.27	
21	Block/Panel Placement	$182.85	$125.16	$125.16	
22	Fill Factor	74%	73%	73%	
23	Meld Run Engineering	$600.00	N/A	N/A	
24	Capacity	100	56	24	
25	Meld Run Per Pair	$0.07	N/A	N/A	
26	**Subtotal**	**$9.95**	**$23.99**	**$280.19**	
27					
28	Cable Racking Per Ft	$99.14	$99.14	$99.14	
29	Aerial Support Per Ft	$92.53	$92.53	$92.53	
30	Capacity Per Rack	219	322	833	
31	Cable Rack Per Ft	$0.88	$0.60	$0.23	
32	Cable Per Ft	$1.54	$1.19	$0.94	
33	Placement of Cable Per Ft	$1.37	$1.37	$0.80	
34	# of Feet	100	55	54	
35	# of Cable Required	1	2	2	
36	# of Terminations Per Cable	100	28	1	
37	Fill Factor	74%	73%	73%	
38	**Total Cable Racking & Cable**	**$5.12**	**$17.00**	**$291.50**	
39					
40	**TOTAL**	**$19.90**	**$64.98**	**$655.35**	

	A	B	C
1	**Bay Support**		
2	Version 1.0 Created 7/12/01, 4:35:46 PM	Cageless	
3	South Dakota		
4	**Bay**		
5	Number of Bays	7.5	
6	Expense per Bay	$ 279.71	
7	Total Material Expense	$ 2,097.80	
8	45 Day Labor Expense per 1st Bay	$ 497.82	
9	45 Day Labor Expense add'l Bay	$ 393.61	
10	Total 45 Day Labor Expense	$ 3,056.29	
11	Total 45 Day Expense	$ 5,154.09	
12			
13	90 Day Labor Expense per Bay	$ 438.27	
14	90 Day Labor Expense add'l Bay	$ 332.62	
15	Total 90 Day Labor Expense	$ 2,600.30	
16	Total 90 Day Expense	$ 4,698.10	
17			
18			
19	**AC Outlet**		
20	Number of AC Outlets	2.25	
21	Expense per AC Outlet	$ 94.05	
22	Total Material	$ 211.61	
23	45 Day Labor Expense per Outlet	$ 126.93	
24	Total 45 Day Labor Expense	$ 285.59	
25	Total 45 Day Expense	$ 497.21	
26			
27	90 Day Labor Expense per Outlet	$ 99.09	
28	Total 90 Day Labor Expense	$ 222.95	
29	Total 90 Day Expense	$ 434.57	
30			
31			
32	**End Guard**		
33	Number of End Guards	3.5	
34	Expense per End Guard	$ 379.46	
35	Total Material Expense	$ 1,328.10	
36	45 Day Labor Expense per End Guard	$ 84.76	
37	Total 45 Day Labor Expense	$ 296.66	
38	Total 45 Day Expense	$ 1,624.76	
39			
40	90 Day Labor Expense per End Guard	$ 58.14	
41	Total 90 Day Labor Expense	$ 203.49	
42	Total 90 Day Expense	$ 1,531.59	
43			
44			
45	**Other**		
46	Number of Anchor Bolts	16.5	
47	Expense per Anchor Bolt Set	27.15	
48	Total	$ 447.98	

	A	B	C
1	**Bay Support**		
2	Version 1.0 Created 7/12/01, 4:35:46 PM	Cageless	
3	South Dakota		
49	Number of Filler Panels	2.875	
50	Expense per Filler Panel	$ 220.09	
51	Total	$ 632.76	
52	Number of Guard Rails	5	
53	Expense per Guard Rail	$ 66.56	
54	Total	$ 332.82	
55	Number of Mountings	28.25	
56	Expense per Mounting	$ 89.70	
57	Total	$ 2,534.06	
58	Number of Miscellaneous Items	12.75	
59	Expense per Miscellaneous Item	$ 0.47	
60	Total	$ 5.97	
61			
62	Grand Total Other	$ 3,953.59	
63			
64	Total Bay Construction Material	$ 7,591.10	
65			
66	45 Day Bay Construction	$ 11,229.64	
67			
68	90 Day Bay Construction	$ 10,617.84	
69			
70			
71			
72		45 Day	90 Day
73	Shipping	$ 1,061.92	$ 1,061.92
74	Tax	$ 633.35	$ 598.85
75	Total Bay Construction	$ 12,924.91	$ 12,278.61
76			
77			
78	Number of Jobs with Support Bays	8	
79	Number of Jobs in Earthquake states	12	
80	% of Jobs that Require Major Aerial Support	50%	
81	Cageless Collocators per office	3	
82	Number of Bays in Standard Configuration	2	
83	Number of Bays to Spread Expense Over	3	
84			
85		45 Day	90 Day
86	Bay Expense - 3 Bays	$ 1,436.10	$ 1,364.29
87	**Total Bay Expense - 2 Bays**	**$ 957.40**	**$ 909.53**
88			
89	**Additional Bay Expense**	**$ 478.70**	**$ 454.76**

Cell: A1
Comment: Bay Construction

Assumptions

Used only in earthquake zones-WA,OR,UT,AZ,ID,WY,MO

Bay supports will be required when major aerial support is installed

The base cageless expense will include space and reinforcement for 2 bays

The frequency of the need for support bays is directly related to the frequency for the need for major aerial support jobs

The Covad jobs reflect a reasonable relationship between the need for support bays and the need for major aerial support jobs for all offices

Calculation

Total bay expense per job (earthquake states only)= (total number of jobs with support bays/total number of jobs in earthquake states)*average expenses for jobs with support bays/# cageless collocators per office

Expense per bay = total bay expense per job/# bays to spread expense over

Cell: A80
Comment: Victoria H. Bishara:

Only 50% of the jobs required additional Major Aerial support which is directly related to the additional Bay Construction required in earthquake states.

	A	B	C
1	**Cable Hole**		
2	Version 1.0 Created 7/12/01, 4:35:46 PM		
3	South Dakota		
4	**Fire Stop**		
5	Number of Fire Stop	0.83	
6	Expense per Fire Stop	$ 1.36	
7	Total Material Expense	$ 1.13	
8			
9	45 Day Labor Expense per Fire Stop	$ 271.74	
10	Total 45 Day Labor Expense	$ 225.35	
11	Total 45 Day Expense	$ 226.47	
12			
13	90 Day Labor Expense per Fire Stop	$ 253.32	
14	Total 90 Day Labor Expense	$ 210.07	
15	Total 90 Day Expense	$ 211.20	
16			
17	**Other**		
18	Number of Bags	0.24	
19	Expense per Bag	$ 29.34	
20	Total	$ 7.16	
21	Number of Labels	1.27	
22	Expense per Label	$ 0.22	
23	Total	$ 0.28	
24	Amount of Putty	1.73	
25	Expense of Putty	$ 27.02	
26	Total	$ 46.78	
27	Number of Sheets	0.37	
28	Expense per Sheet	$ 69.55	
29	Total	$ 25.44	
30	Amount of Tape	0.07	
31	Expense of Tape	$ 188.83	
32	Total	$ 13.82	
33	Number of miscellaneous items	0.44	
34	Expense per miscellaneous item	$ 2.64	
35	Total	$ 1.16	
36			
37	**Total Other**	**$ 94.64**	
38			
39	Total Material Expense	$ 95.77	
40			
41			
42		45 Day	90 Day
43	Cable Hole Expense	$ 321.11	$ 305.84
44	Shipping	$ 13.40	$ 13.40
45	Tax	$ 18.11	$ 17.25
46	Total Cable Hole Expense	**$ 352.62**	**$ 336.48**

Cell: A1
Comment: Cable Hole

Assumptions

Expenses are to open and shut hole to accommodate new cables.
Must be done every time cable hole is used

Calculations

100% Nonrecurring dedicated
Total average expense of jobs

	A	B	C	D
1	**Grounding**	Version 1.0 Created 7/12/01, 4:35:46 PM		
2		South Dakota		
3	**1/0 Cable**			
4	1/0 Cable Footage	0.98		
5	Expense per foot of 1/0 Cable	$ 3.12		
6	Total Material	$ 3.04		
7				
8	45 Day Labor Expense per foot of 1/0 Cable	$ 3.42		
9	Total 45 Day Labor Expense	$ 3.34		
10	Total 45 Day Expense	$ 6.38		
11				
12	90 Day Labor Expense per foot of 1/0 Cable	$ 2.42		
13	Total 90 Day Labor Expense	$ 2.36		
14	Total 90 Day Expense	$ 5.40		
15				
16	**# 2 Cable**			
17	#2 Cable Footage	34.88		
18	Expense per foot of #2 Cable	$ 1.56		
19	Total Material	$ 54.32		
20				
21	45 Day Labor Expense per foot of #2 Cable	$ 1.21		
22	Total 45 Day Labor Expense	$ 42.20		
23	Total 45 Day Expense	$ 96.52		
24				
25	90 Day Labor Expense per foot of #2 Cable	$ 0.83		
26	Total 90 Day Labor Expense	$ 28.95		
27	Total 90 Day Expense	$ 83.27		
28				
29	**4/0 Cable**			
30	4/0 Cable Footage	33.66		
31	Expense per foot of 4/0 Cable	$ 2.11		
32	Total Material	$ 71.15		
33				
34	45 Day Labor Expense per foot of 4/0 Cable	$ 6.35		
35	Total 45 Day Labor Expense	$ 213.73		
36	Total 45 Day Expense	$ 284.88		
37				
38	90 Day Labor Expense per foot of 4/0 Cable	$ 4.54		
39	Total 90 Day Labor Expense	$ 152.81		
40	Total 90 Day Expense	$ 223.96		
41				
42				
43	**# 6 Cable**			
44	#6 Cable Footage	0.61		
45	Expense per foot of #6 Cable	$ 0.67		
46	Total Material	$ 0.41		
47				
48	45 Day Labor Expense per foot of #6 Cable	$ 1.21		

	A	B	C	D
1	**Grounding**	Version 1.0 Created 7/12/01, 4:35:46 PM		
2		South Dakota		
49	Total 45 Day Labor Expense	$ 0.74		
50	Total 45 Day Expense	$ 1.15		
51				
52	90 Day Labor Expense per foot of #6 Cable	$ 0.83		
53	Total 90 Day Labor Expense	$ 0.51		
54	Total 90 Day Expense	$ 0.91		
55				
56	**750 Cable**			
57	750 Cable Footage	10.85		
58	Expense per foot of 750 Cable	$ 8.80		
59	Total Material	$ 95.52		
60				
61	45 Day Labor Expense per foot of 750 Cable	$ 27.42		
62	Total 45 Day Labor Expense	$ 297.61		
63	Total 45 Day Expense	$ 393.12		
64				
65	90 Day Labor Expense per foot of 750 Cable	$ 18.90		
66	Total 90 Day Labor Expense	$ 205.13		
67	Total 90 Day Expense	$ 300.65		
68				
69	**Alternative Racking**			
70	Amount of Alternative Racking	1.07		
71	Expense of Alternative Racking	$ 6.87		
72	Total Alternative Racking Material Expense	$ 7.37		
73				
74	Total Grounding Material Expense	$ 231.81		
75				
76				
77		45 Day	90 Day	
78	Expense for Grounding	$ 789.42	$621.57	
79	Shipping	$ 32.43	$ 32.43	
80	Tax	$ 44.52	$ 35.06	
81	Total Expense for Grounding	**$ 866.37**	**$689.05**	

Cell: A1
Comment: Grounding
Assumptions
Total charged to job

Calculations
100% Nonrecurring dedicated
Total average expense of jobs

	A	B	C
1			
2	Version 1.0 Created 7/12/01, 4:35:46 PM		
3	South Dakota		
4	**Ground Bar**		
5	Number of Ground Bars	0.07	
6	expense per Ground Bar	$ 83.28	
7	Total Material expense	$ 6.09	
8			
9	45 Day Labor expense per Ground Bar	$ 299.52	
10	Total 45 Day Labor expense	$ 21.92	
11	Total 45 Day expense	$ 28.01	
12			
13	90 Day Labor expense per Ground Bar	$ 247.95	
14	Total 90 Day Labor expense	$ 18.14	
15	Total 90 Day expense	$ 24.24	
16			
17			
18		45 Day	90 Day
19	Ground Bar expense	$ 28.01	$ 24.24
20	Shipping	$ 0.85	$ 0.85
21	Tax	$ 1.58	$ 1.37
22	Total Ground Bar expense	$ 30.44	$ 26.46
23			
24	Number of Collocators per office	3	
25			
26	Ground Bar expense per Collocator	$ 10.15	$ 8.82

Cell: A4
Comment: Ground Bar
Assumptions
Ground bar will be required in 5% to 10% of the offices
Ground bar is shared by all collocators

Calculations
Ground bar Expense = Average ground bar expense (jobs)/# collocators

	A	B	C
1	Version 1.0 Created 7/12/01, 4:35:46 PM		
2	South Dakota		
3	**Miscellaneous**		
4	**Fiber Duct**		
5	Number of Ducts	0.20	
6	Expense per Duct	$ 3.06	
7	Total Material Expense	$ 0.60	
8			
9	45 Day Labor Expense per Duct	$ 22.45	
10	Total 45 Day Labor Expense	$ 4.38	
11	Total 45 Day Expense	$ 4.98	
12			
13	90 Day Labor Expense per Duct	$ 18.89	
14	Total 90 Day Labor Expense	$ 3.69	
15	Total 90 Day Expense	$ 4.28	
16			
17			
18	**Other**		
19	Number of Misc Materials	0.95	
20	Expense for Misc Materials	$ 803.18	
21	Total	$ 764.00	
22	Number of Bolt Kits	0.02	
23	Expense per Bolt Kit	$ 7.53	
24	Total	$ 0.18	
25	Number of Eqpt Nuts and Bolts	0.17	
26	Expense for Eqpt Nuts and Bolts	$ 5.71	
27	Total	$ 0.97	
28	Number of General Nuts and Bolts	17.12	
29	Expense for General Nuts and Bolts	$ 0.40	
30	Total	$ 6.77	
31	Amount of Paint	1.29	
32	Expense for Paint	$ 8.66	
33	Total	$ 11.19	
34	Number of Tags	2.02	
35	Expense per Tag	$ 2.86	
36	Total	$ 5.79	
37	Amount of Tape	0.34	
38	Expense for Tape	$ 9.92	
39	Total	$ 3.39	
40	Number of Miscellaneous Items	5.49	
41	Expense per Miscellaneous Item	$ 115.25	
42	Total	$ 632.50	
43			
44	Total Other	$ 1,424.80	
45			
46	Total Miscellaneous Material Expense	$ 1,425.39	
47			

	A	B	C
1	Version 1.0 Created 7/12/01, 4:35:46 PM		
2	South Dakota		
3	**Miscellaneous**		
48			
49		45 Day	90 Day
50	Miscellaneous Expense	$ 1,429.78	$ 1,429.08
51	Shipping	$ 199.40	$ 199.40
52	Taxes	$ 80.64	$ 80.60
53	Total Miscellaneous Expense	$ 1,709.81	$ 1,709.08
54			
55	% of Time that Misc Items are	42%	42%
56	Nonrecurring		
57	Number of Bays in Standard Configuration	2	
58	Number of Bays to Spread Expense Over	3	
59			
60			
61	**Total Miscellaneous Expense**	**$ 478.47**	**$ 478.26**
62			
63	Additional Bay	**$ 239.23**	**$ 239.13**

CONTINUATION

[29]

	A	B	
1	Equipment Category	**MOTOR VEHICLE**	
2	Material_USW ID		
3	Labor_Item Description		
4	C8WLC02	$	5.25
5	C8WLC03	$	30.96
6	C8WLC04	$	18.00
7	C8WLC05	$	26.13
8	C8WLC06	$	20.64
9	C8WLC07	$	1,354.78
10	C8WLC09	$	-
11	C8WLC11	$	34.72
12	C8WLC12	$	5.34
13	C8WLC13	$	-
14	C8WLC14	$	10.31
15	C8WLC15	$	26.12
16	C8WLC16	$	26.96
17	C8WLC18	$	20.64
18	C92LC19	$	1,142.88
19	C9MLC01	$	12.15
20	C9MLC05	$	8.10
21	C9MLC07	$	56.24
22	C9MLC08	$	167.40
23	C9MLC13	$	5.40
24	C9MLC16	$	8.10
25	C9MLC17	$	281.55
26	C9MLC21	$	3.59
27	C9MLC23	$	1,589.28
28	C9MLC24	$	584.55
29	C9MLC26	$	490.96
30	C9RLC05	$	855.98
31	C9RLC06	$	283.50
32	C9RLC08	$	837.43
33	C9RLC10	$	1,268.45
34	C9WLC16	$	165.85
35	C9WLC17	$	28.25
36			
37	TOTAL	$	9,369.51
38			
39	Average	**$**	**228.52**

	A	B	C	D	E	F	G	H	I	J
1	Version 1.0 Created 7/12/01, 4:35:46 PM		**Expenses for A & B DC Feeds to equipment,**							
2	South Dakota		**in collocated space, from BDFB or power board,**							
3					**Averaged for 5 actual sites**					
4		**45 Day**					**90 Day**			
5	**Costs for Virtual/Cageless Collocation**									
6		**20 A**	**30 A**	**40 A**	**60 A**		**20 A**	**30 A**	**40 A**	**60 A**
7										
8	Bellevue Sherwood, WA	$60.91	$61.01	$67.42	$67.55		$51.10	$51.21	$57.62	$57.74
9	Seattle Duwamish, WA	$52.68	$58.23	$85.12	$85.19		$43.66	$49.21	$69.37	$69.44
10	Westminster, CO	$56.66	$56.71	$86.02	$92.71		$47.77	$47.82	$69.74	$77.12
11	Crystal, MN	$53.12	$80.69	$88.25	$144.90		$44.54	$65.02	$73.03	$144.16
12	Portland Alpine, OR	$53.89	$60.26	$60.30	$87.71		$44.69	$51.07	$51.10	$71.74
13										
14		$55.45	$63.38	$77.42	$95.61		$46.35	$52.87	$64.17	$84.04
15		**$3,923**	**$4,484**	**$5,477**	**$6,764**		**$3,279**	**$3,740**	**$4,540**	**$5,945**
16	Shipping	$219.49	$250.89	$306.47	$378.47		$183.48	$209.26	$254.02	$332.65
17	Tax	$ 221.24	$ 252.88	$ 308.90	$ 381.48		$ 184.93	$ 210.92	$ 256.03	$ 335.29
18	Total	$4,363	$4,988	$6,092	$7,524		$3,647	$4,160	$5,050	$6,613
19										
20	**Assumptions**									
21	inflation/apprec. rate	2.0%								
22	appreciated year	1999								
23	base cost year	1999								
24	avg <60 A Physical run	83	ft.							
25	avg Virtual/Cageless run	71	ft.							
26	avg >60 A run	183	ft.							
27	60 A feeds from BDFB	35%		**45 Day Installation**		**90 Day Installation**				
28	1/0 thru 4/0 - #2 H-Tap	$4.66	ea.	$42.41	ea.	$35.18	ea.			
29	350-750 kcmil - 1/0-4/0 H-	$15.22	ea.	$58.42	ea.	$49.50	ea.			
30	350-750 kcmil - #2 H-Tap	$29.32	ea.	$42.41	ea.	$35.18	ea.			
31	kcmil - kcmil H-Tap	$30.54	ea.	$58.42	ea.	$49.50	ea.			
32	#6 AWG lug	$0.24	ea.	$29.46	ea.	$22.79	ea.			
33	#4 AWG lug	$1.22	ea.	$29.46	ea.	$22.79	ea.			
34	#2 AWG lug	$2.26	ea.	$42.41	ea.	$35.18	ea.			
35	1/0 lug	$2.68	ea.	$42.41	ea.	$35.18	ea.			
36	2/0 lug	$4.15	ea.	$42.41	ea.	$35.18	ea.			
37	4/0 lug	$5.80	ea.	$42.41	ea.	$35.18	ea.			
38	350 kcmil lug	$10.72	ea.	$58.42	ea.	$49.50	ea.			
39	500 kcmil lug	$12.44	ea.	$58.42	ea.	$49.50	ea.			
40	750 kcmil lug	$28.76	ea.	$58.42	ea.	$49.50	ea.			
41	#6 AWG cost	$0.55	/ft.	$3.89	/ft.	$2.72	/ft.			
42	#4 AWG cost	$0.88	/ft.	$4.82	/ft.	$3.31	/ft.			
43	#2 AWG cost	$1.97	/ft.	$4.82	/ft.	$3.31	/ft.			
44	1/0 AWG cost	$3.12	/ft.	$6.84	/ft.	$4.85	/ft.			
45	2/0 AWG cost	$3.31	/ft.	$6.84	/ft.	$4.85	/ft.			
46	4/0 AWG cost	$4.67	/ft.	$6.84	/ft.	$4.85	/ft.			
47	350 kcmil cost	$4.82	/ft.	$12.71	/ft.	$9.09	/ft.			
48	500 kcmil cost	$7.16	/ft.	$12.71	/ft.	$9.09	/ft.			
49	750 kcmil cost	$12.54	/ft.	$21.41	/ft.	$21.41	/ft.			
50	25 A fuse	$17.51	ea.	$9.90	ea.	$9.90	ea.			
51	30 A fuse	$18.22	ea.	$9.90	ea.	$9.90	ea.			
52	40 A fuse	$18.94	ea.	$9.90	ea.	$9.90	ea.			
53	50 A fuse	$19.65	ea.	$9.90	ea.	$9.90	ea.			
54	60 A fuse	$20.37	ea.	$9.90	ea.	$9.90	ea.			
55	75 A fuse	$21.29	ea.	$9.90	ea.	$9.90	ea.			
56	75 A fuse/brkr avg	$47.40	ea.	$21.79	ea.	$21.79	ea.			
57	80 A fuse/brkr avg	$48.70	ea.	$21.79	ea.	$21.79	ea.			
58	90 A fuse/brkr avg	$75.15	ea.	$21.79	ea.	$21.79	ea.			

	A	B	C	D	E	F	G	H	I	J
1	Version 1.0 Created 7/12/01, 4:35:46 PM		**Expenses for A & B DC Feeds to equipment,**							
2	South Dakota		**in collocated space, from BDFB or power board,**							
3					**Averaged for 5 actual sites**					
59	100 A fuse/brkr avg	$92.40	ea.	$21.79	ea.	$21.79	ea.			
60	125 A fuse/brkr avg	$104.75	ea.	$21.79	ea.	$21.79	ea.			
61	150 A fuse/brkr avg	$116.75	ea.	$21.79	ea.	$21.79	ea.			
62	200 A fuse/brkr avg	$148.00	ea.	$21.79	ea.	$21.79	ea.			
63	250 A fuse/brkr avg	$179.00	ea.	$21.79	ea.	$21.79	ea.			
64	300 A fuse/brkr avg	$218.15	ea.	$21.79	ea.	$21.79	ea.			
65	400 A fuse/brkr avg	$235.80	ea.	$21.79	ea.	$21.79	ea.			
66	500 A fuse/brkr avg	$273.75	ea.	$21.79	ea.	$21.79	ea.			
67	600 A fuse/brkr avg	$307.50	ea.	$21.79	ea.	$21.79	ea.			
68	H-Tap covers	$53.98	/job							
69	miscellaneous material co	$183.13	/job							
70	Nuts & Bolts for Power	$9.14	/job							
71	Alarm fuses	$17.62	/job							
72	Heat Shrink	$17.48	/job							
73	Cable Tags	$79.25	/job							
74	BDFB loop drop	0.25	V							
75	PBD loop drop	1.00	V							

	A	B	C
1	Version 1.0 Created 7/12/01, 4:35:46 PM		
2	South Dakota		
3	**Lighting**		
4	**Fixtures**		
5	Number of Fixtures	2.56	
6	Expense per Fixture	$ 111.70	
7	Total Material Expense	$ 286.06	
8			
9	45 Day Labor Expense per Fixture	213.59	
10	Total 45 Day Labor Expense	$ 547.00	
11	Total 45 Day Expense	$ 833.06	
12			
13	90 Day Labor Expense per Fixture	202.12	
14	Total 90 Day Labor Expense	$ 517.62	
15	Total 90 Day Expense	$ 803.68	
16			
17			
18	**Lighting**		
19	Number of Lights	1.71	
20	Expense per Light	$ 103.96	
21	Total Material Expense	$ 177.50	
22			
23	45 Day Labor expense per Light	$ 213.59	
24	Total 45 Day Labor expense	$ 364.67	
25	Total 45 Day expense	$ 542.17	
26			
27			
28	90 Day Labor expense per Light	$ 202.12	
29	Total 90 Day Labor expense	$ 345.08	
30	Total 90 Day expense	$ 522.58	
31			
32			
33	**Cable**		
34	Number of Cables	13.66	
35	expense per Cable	$ 0.37	
36	Total Material expense	$ 5.05	
37			
38	45 Day Labor expense per Cable	$ 4.82	
39	Total 45 Day Labor expense	$ 16.46	
40	Total 45 Day expense	$ 21.51	
41			
42			
43	90 Day Labor expense per Cable	$ 3.31	
44	Total 90 Day Labor expense	$ 11.30	
45	Total 90 Day expense	$ 16.36	
46			
47			
48			

	A	B	C
1	Version 1.0 Created 7/12/01, 4:35:46 PM		
2	South Dakota		
49	**Conduit Support**		
50	Number of Conduit Supports	0.07	
51	expense per Conduit Support	$ 165.46	
52	Total Material expense	$ 12.11	
53			
54	45 Day Labor expense per Conduit Support	$ 19.07	
55	Total 45 Day Labor expense	$ 23.26	
56	Total 45 Day expense	$ 35.36	
57			
58			
59	90 Day Labor expense per Conduit Support	$ 17.77	
60	Total 90 Day Labor expense	$ 21.67	
61	Total 90 Day expense	$ 33.78	
62			
63			
64			
65	**Wire**		
66	Number of Wires	17.07	
67	expense per Wire	$ 0.25	
68	Total Material expense	$ 4.27	
69			
70	45 Day Labor expense per Wire	$ 3.65	
71	Total 45 Day Labor expense	$ 15.58	
72	Total 45 Day expense	$ 19.85	
73			
74			
75	90 Day Labor expense per Wire	$ 2.77	
76	Total 90 Day Labor expense	$ 11.82	
77	Total 90 Day expense	$ 16.09	
78			
79			
80			
81	**Other**		
82	Number of Conduit Supports	0.29	
83	expense per Conduit Support	$ 0.11	
84	Total	$ 0.03	
85	Number of Outlet Raceways	2.27	
86	expense per Outlet Raceway	$ 44.11	
87	Total	$ 100.06	
88	Number of Supports	8.15	
89	expense per Support	$ 8.42	
90	Total	$ 68.62	
91	Number of Switches	1.20	
92	Expense per Switch	$ 97.81	
93	Total	$ 116.89	
94	Number of Fittings	8.73	

	A	B	C
1	Version 1.0 Created 7/12/01, 4:35:46 PM		
2	South Dakota		
95	Expense per Fitting	$ 4.74	
96	Total	$ 41.37	
97	Number of Fitting Supports	0.73	
98	Expense per Fitting Supports	$ 13.67	
99	Total	$ 10.00	
100	Number of Miscellaneous Items	5.22	
101	Expense per Miscellaneous Item	$ 0.27	
102	Total	$ 1.42	
103			
104	Total Other	$ 338.40	
105			
106	Total Lighting Material Expense	$ 823.38	
107			
108			
109		45 Day	90 Day
110	Lighting Expense	$ 1,790.34	$ 1,730.89
111	Shipping	$ 115.18	$ 115.18
112	Tax	$ 100.98	$ 97.62
113	Total Lighting Expense	$ 2,006.50	$ 1,943.69
114			
115			
116			
117	Number of Light Fixtures	4.27	
118	% of time lighting is required	70%	
119	# of Lights per 8 Bays	3.00	
120	Fill Factor	75%	
121	# of Bays in Standard Configuration	2.00	
122	# of Bays	8	
123	Number of Bays to Spread Expense Over	3	
124			
125			
126		45 Day	90 Day
127	Lighting Expense	$ 329.07	$ 318.77
128	Total Bay Expense - 3 Bays	$ 329.07	$ 318.77
129			
130	**Total Bay Expense - 2 Bays**	**$ 219.38**	**$ 212.51**
131			
132	Each Additional Bay	**$ 109.69**	**$ 106.26**

Cell: A3
Comment: Lighting

Assumptions

70% of the time new lighting will be required in an office
Three lights will be required for each set of eight installed bays
A 75% fill factor will be applied to each set of eight bays
Two bays are to be included in the standard configuration
Additional bays (more than 2) will require additional lighting increment

Calculations

Expense Per Installed Light Fixture (from jobs) * 3 lights / 8 bays * 70% Occurrence / 75% fill = expense per bay
Expense Per Bay * 2 = Bay expense in Flat Rate

	A	B	C	D	E
1	**Overall Aerial Support**	Cageless		Caged	
2	Version 1.0 Created 7/12/01, 4:35:46 PM	Major Jobs	Minor Jobs	Major Jobs	Minor Jobs
3	South Dakota				
4	**Aux Frame Channel**				
5	Number of 10 foot channels	60	7	32	5
6	Number of 20 foot channels	7	1	16	3
7	Expense per 10 foot Channel	$ 18.00	$ 12.94	$ 18.00	$ 12.94
8	Expense per 20 foot Channel	$ 50.10	$ 38.05	$ 50.10	$ 38.05
9	Total Material Expense	$ 1,435.14	$ 110.37	$ 1,377.83	$ 159.82
10	45 Day Labor Expense per 10' Channel	$ 5,007.37	$ 575.78		
11	45 Day Labor Expense per 20' Channel	$ 1,198.95	$ 94.22		
12	Total 45 Day Labor Expense	$ 6,206.32	$ 670.00		
13	Total 45 Day Expense	$ 7,641.46	$ 780.37		
14					
15	90 Day Labor Expense per 10' Channel	$ 4,065.68	$ 467.50	$ 2,176.00	$ 340.00
16	90 Day Labor Expense per 20' Channel	$ 973.47	$ 76.50	$ 2,176.00	$ 340.00
17	Total 90 Day Labor Expense	$ 5,039.16	$ 544.00	$ 4,352.00	$ 680.00
18	Total 90 Day Expense	$ 6,474.30	$ 654.37	$ 5,729.83	$ 839.82
19					
20					
21	**U Channel**				
22	Number of U Channels	1	0	1	0
23	Expense per U Channel	$ 123.25	$ -	$ 123.25	$ -
24	Total Material Expense	$ 110.28	$ -	$ 110.28	$ -
25	45 Day Labor Expense per foot	$ 23.25	$ 23.25		
26	Total 45 Day Labor Expense	$ 416.05	$ -		
27	Total 45 Day Expense	$ 526.33	$ -		
28					
29	90 Day Labor Expense per foot	$ 20.40	$ 13.60	$ 20.40	$ 13.60
30	Total 90 Day Labor Expense	$ 365.05	$ -	$ 365.05	$ -
31	Total 90 Day Expense	$ 475.33	$ -	$ 475.33	$ -
32					
33					
34	Other				
35	Number of Aux Frame Fittings	28.79	3.56	20.64	3.59
36	Expense per Aux Frame Fitting	$ 20.27	$ 19.23	$ 20.27	$ 19.23
37	Total	$ 583.55	$ 68.51	$ 418.40	$ 69.08
38	Number of Aux Frames Support	68.47	18.44	49.09	18.59
39	Expense per Aux Frame Support	$ 7.00	$ 5.12	$ 7.00	$ 5.12
40	Total	$ 479.00	$ 94.31	$ 343.44	$ 95.10
41	Number of Aux Frame Nuts and Bolts	140.47	8.13	100.72	8.19
42	Expense of Aux Frame Nuts and Bolts	$ 0.39	$ 0.29	$ 0.39	$ 0.29
43	Total	$ 55.20	$ 2.37	$ 39.58	$ 2.39
44	Number of Cable Racks Support	0.21	0.00	0.15	0.00
45	Expense per Cable Rack Support	$ 24.19	$ -	$ 24.19	$ -
46	Total	$ 5.09	$ -	$ 3.65	$ -
47	Amount of Insulation	5.47	0.88	3.92	0.88
48	Expense per Insulation	$ 2.63	$ 2.42	$ 2.63	$ 2.42

	A	B	C	D	E
1	**Overall Aerial Support**	Cageless		Caged	
2	Version 1.0 Created 7/12/01, 4:35:46 PM	Major Jobs	Minor Jobs	Major Jobs	Minor Jobs
3	South Dakota				
49	Total	$ 14.37	$ 2.12	$ 10.31	$ 2.14
50	Number of Miscellaneous Items	17.47	0.13	12.53	0.13
51	Expense per miscellaneous item	$ 11.24	$ 6.58	$ 11.24	$ 6.58
52	Total	$ 196.39	$ 0.82	$ 140.81	$ 0.83
53	Number of Nuts and Bolts - cable racking	0.42	0.25	0.30	0.25
54	Expense of Nuts and Bolts - cable racking	$ 0.52	$ 0.52	$ 0.52	$ 0.52
55	Total	$ 0.22	$ 0.13	$ 0.16	$ 0.13
56	Number of General Support items	1.58	0.00	1.13	0.00
57	Expense of General Support items	$ 1.95	$ -	$ 1.95	$ -
58	Total	$ 3.08	$ -	$ 2.21	$ -
59	Number of U-Channel - Other Items	1.47	7.50	1.06	7.56
60	Expense of U-Channel - Other Items	$ 7.25	$ 2.18	$ 7.25	$ 2.18
61	Total	$ 10.68	$ 16.37	$ 7.66	$ 16.51
62	Number of U-Channel Fittings	0.00	0.25	0.00	0.25
63	Expense of U-Channel Fitting	$ -	$ 2.78	$ -	$ 2.78
64	Total	$ -	$ 0.70	$ -	$ 0.70
65	Grand Total Other	$ 1,347.60	$ 185.32	$ 966.20	$ 186.88
66					
67	Total Overall Aerial Support Material	$ 2,893.02	$ 295.70	$ 2,454.31	$ 346.70
68					
69	Total 45 Day Labor	$ 6,622.37	$ 670.00		
70	Total 90 Day Labor	$ 5,514.49	$ 544.00	$ 4,827.33	$ 680.00
71					
72	Total 45 Day Overall Aerial Support	$ 9,515.39	$ 965.70		
73	Total 90 Day Overall Aerial Support	$ 8,297.23	$ 839.70	$ 7,171.36	$ 1,026.70
74					
75	Shipping	$ 404.70	$ 41.36	$ 343.33	$ 48.50
76	Tax 45 day	$ 536.67	$ 54.47		
77	Tax 90 Day	$ 467.96	$ 47.36	$ 404.46	$ 57.91
78	Grand Total Overall Aerial Support-45 day	$ 10,456.76	$ 1,061.52		
79	Grand Total Overall Aerial Support-90 day	$ 9,169.90	$ 928.42	$ 7,919.16	$ 1,133.11
80					
81					
82	% of Jobs that Require Major Aerial Support	50%		100%	
83	Average Number of Collocators in an Office	3		3	
84	% of Jobs Requiring Any Aerial Support	85%		85%	
85					
86		45 Day	90 Day	90 Day	
87	Total Overall Aerial Support	$ 2,472.05	$ 2,166.13	$ 3,229.31	
88					
89	% of Aerial Support used for Cable Racking	75%		75%	
90	% of Aerial Support used for Panel EICT	12.50%		12.50%	
91					

	A	B	C	D	E
1	**Overall Aerial Support**	Cageless		Caged	
2	Version 1.0 Created 7/12/01, 4:35:46 PM	Major Jobs	Minor Jobs	Major Jobs	Minor Jobs
3	South Dakota				
92		45 Day	90 Day	90 Day	
93	Amount Assigned to Cable Racking	$ 1,854.04	$ 1,624.60	$ 2,421.98	
94	Amount Assigned to Panel EICT	$ 309.01	$ 270.77	$ 403.66	
95	Amount Remaining in Aerial Support	$ 309.01	$ 270.77	$ 403.66	
96					
97	Number of Bays to Spread Expense Over	3			
98	Number of Bays in Standard Configuration	2			
99					
100					
101	Total Expense for Overall Aerial Support-2 Bay	**$ 206.00**	**$ 180.51**	**$ 403.66**	
102					
103	Additional Bay Expense	**$ 103.00**	**$ 90.26**		

Cell: A1
Comment: Aerial Support

Assumptions

A major aerial support job costs in excess of $1,000
All other jobs are minor jobs
Major jobs will occur in 50% of the offices when the first collocator enters
Minor jobs will occur on all collocations with the same frequency as COVAD jobs
75% Aerial support is for cable racking

Calculations

Cost for Aerial Support = A * average cost for major aerial support jobs+((total number of jobs with any aerial support/total jobs studied)-A)* cost of minor aerial support jobs, Where: A=50% offices requiring major support
Standard job cost=Cost for aerial support/# bays * # bays in standard configuration jobs/# collocators per office

	A	B	C	D	E
1					
2	**Engineering**				
3		All Jobs		2 highest and	
4	**Job ID**			2 lowest jobs removed	
5	C8WLC09	$ 1,163.00			
6	C9RLC06	$ 2,713.64			
7	C9WLC17	$ 3,963.49		$ 3,963.49	
8	C8WLC18	$ 5,761.44		$ 5,761.44	
9	C9MLC16	$ 6,182.22		$ 6,182.22	
10	C8WLC19	$ 6,669.04		$ 6,669.04	
11	C9RLC08	$ 6,754.10		$ 6,754.10	
12	C9MLC13	$ 6,964.54		$ 6,964.54	
13	C8WLC03	$ 7,048.14		$ 7,048.14	
14	C9MLC06	$ 7,290.89		$ 7,290.89	
15	C9MLC01	$ 7,354.58		$ 7,354.58	
16	C9WLC16	$ 7,576.25		$ 7,576.25	
17	C8WLC20	$ 7,637.24		$ 7,637.24	
18	C8WLC13	$ 7,725.58		$ 7,725.58	
19	C9MLC08	$ 7,747.36		$ 7,747.36	
20	C9MLC19	$ 8,579.03		$ 8,579.03	
21	C9MLC05	$ 8,791.67		$ 8,791.67	
22	C8WLC12	$ 8,904.49		$ 8,904.49	
23	C8WLC17	$ 8,988.83		$ 8,988.83	
24	C9MLC21	$ 9,288.53		$ 9,288.53	
25	C92LC12	$ 9,822.74		$ 9,822.74	
26	C9RLC05	$ 9,898.48		$ 9,898.48	
27	C8WLC14	$ 10,609.28		$ 10,609.28	
28	C8WLC06	$ 10,721.26		$ 10,721.26	
29	C9MLC07	$ 10,839.04		$ 10,839.04	
30	C9MLC17	$ 10,860.84		$ 10,860.84	
31	C9MLC20	$ 10,930.64		$ 10,930.64	
32	C8WLC07	$ 11,379.69		$ 11,379.69	
33	C8WLC15	$ 12,747.86		$ 12,747.86	
34	C8WLC04	$ 13,012.52		$ 13,012.52	
35	C92LC19	$ 13,064.78		$ 13,064.78	
36	C8WLC08	$ 13,151.00		$ 13,151.00	
37	C8WLC02	$ 13,387.69		$ 13,387.69	
38	C8WLC16	$ 13,423.84		$ 13,423.84	
39	C8WLC21	$ 15,822.91		$ 15,822.91	
40	C8WLC11	$ 17,474.02		$ 17,474.02	
41	C8WLC05	$ 17,474.17		$ 17,474.17	
42	C9RLC10	$ 17,601.95		$ 17,601.95	
43	C9MLC23	$ 20,545.88		$ 20,545.88	
44	C9MLC24	$ 21,057.80			
45	C9MLC26	$ 25,968.00			
46	TOTAL	$ 436,898.45		$ 385,996.01	
47					
48	Average	**$ 10,656.06**		**$ 10,432.32**	

Cell: A2
Comment: Engineering

Assumptions

Total charged to job.
Dedicated to Collocator
Not shared

Calculations

100% Nonrecurring dedicated
Total average expense of jobs with 2 highest and 2 lowest jobs removed

	A	B	C	D	E
1	**Cable Racking**	**2.1 Cageless**		**3.1 Caged**	
2	Version 1.0 Created 7/12/01, 4:35:46 PM				
3	South Dakota	Major Jobs	Minor Jobs	Major Jobs	Minor Jobs
4	**Cable Racking Channel**				
5	Number of 10' Channels	9.5	1.3	8	2.5
6	Expense per 10' Channel	$ 74.52	$ 69.17	$ 74.52	$ 69.17
7	Total Material Expense	$ 707.96	$ 89.92	$ 596.17	$ 172.93
8	45 Day Labor Expense per foot	$ 24.06	$ 24.06	$ 24.06	$ 24.06
9	Total 45 Day Labor Expense	$ 2,285.70	$ 312.78	$ 1,924.80	$ 601.50
10	Total 45 Day Expense	$ 2,993.66	$ 402.70	$ 2,520.97	$ 774.43
11					
12	90 Day Labor Expense per foot	$ 21.93	$ 21.93	$ 21.93	$ 21.93
13	Total 90 Day Labor Expense	$ 2,083.35	$ 285.09	$ 1,754.40	$ 548.25
14	Total 90 Day Expense	$ 2,791.31	$ 375.01	$ 2,350.57	$ 721.18
15					
16					
17	**Cable Racking Ladder**				
18	Number of 10' Ladders	1.5	0.1		
19	Expense per 10' Ladder	$ 30.70	$ 23.76		
20	Total Material Expense	$ 47.24	$ 2.38		
21	45 Day Labor Expense per foot	$ 24.06	$ 24.06		
22	Total 45 Day Labor Expense	$ 370.15	$ 24.06		
23	Total 45 Day Expense	$ 417.39	$ 26.44		
24					
25	90 Day Labor Expense per foot	$ 21.93	$ 21.93		
26	Total 90 Day Labor Expense	$ 337.38	$ 21.93		
27	Total 90 Day Expense	$ 384.62	$ 24.31		
28					
29					
30	**Horn**				
31	Number of Horns	29.3	2.4	24.6	4.6
32	Expense per Horn	$ 13.93	$ 15.70	$ 13.93	$ 15.70
33	Total Material Expense	$ 407.75	$ 37.68	$ 343.37	$ 72.46
34	45 Day Labor Expense per Horn	$ 8.43	$ 8.43		
35	Total 45 Day Labor Expense	$ 246.74	$ 20.23		
36	Total 45 Day Expense	$ 654.49	$ 57.91		
37					
38					
39	90 Day Labor Expense per Horn	$ 7.00	$ 7.00	$ 7.00	$ 7.00
40	Total 90 Day Labor Expense	$ 204.88	$ 16.80	$ 172.53	$ 32.31
41	Total 90 Day Expense	$ 612.63	$ 54.48	$ 515.90	$ 104.77
42					

	A	B	C	D	E
1	**Cable Racking**	**2.1 Cageless**		**3.1 Caged**	
2	Version 1.0 Created 7/12/01, 4:35:46 PM				
3	South Dakota	Major Jobs	Minor Jobs	Major Jobs	Minor Jobs
43					
44	**Pan**				
45	Amount of Pan	7.2	1.4	6.0	2.7
46	Expense for Pan	$ 26.31	$ 28.77	$ 26.31	$ 28.77
47	Total Material Expense	$ 188.21	$ 40.28	$ 158.49	$ 77.46
48	45 Day Labor Expense per Pan	$ 16.14	$ 16.14		
49	Total 45 Day Labor Expense	$ 1,154.63	$ 225.96		
50	Total 45 Day Expense	$ 1,342.84	$ 266.24		
51					
52	90 Day Labor Expense per Pan	$ 13.56	$ 13.56	$ 13.56	$ 13.56
53	Total 90 Day Labor Expense	$ 970.06	$ 189.84	$ 816.89	$ 365.08
54	Total 90 Day Expense	$ 1,158.27	$ 230.12	$ 975.38	$ 442.53
55					
56	**Other**				
57	Number of Systems Ladders	10.6	1	8.9	1
58	Expense per Systems Ladder	$ 4.91	$ 2.65	$ 4.91	$ 2.65
59	Total	$ 52.17	$ 1.59	$ 43.93	$ 3.05
60	Number of Brackets	17.7	10.8	14.9	20.77
61	Expense per Bracket	$ 12.05	$ 13.60	$ 12.05	$ 13.60
62	Total	$ 213.70	$ 146.85	$ 179.95	$ 282.41
63	Number of Fittings	51.1	35	43.0	67.31
64	Expense per Fitting	$ 8.04	$ 6.84	$ 8.04	$ 6.84
65	Total	$ 410.84	$ 239.38	$ 345.97	$ 460.34
66	Number of Insulators	3.7	1.6	3.1	3.08
67	Expense per Insulator	$ 1.04	$ 0.64	$ 1.04	$ 0.64
68	Total	$ 3.83	$ 1.02	$ 3.22	$ 1.97
69	Number of Cable Racking Kits	9.1	3.8	7.7	7.31
70	Expense per Cable Racking Kit	$ 60.15	$ 49.39	$ 60.15	$ 49.39
71	Total	$ 548.30	$ 187.68	$ 461.73	$ 360.92
72	Number of Miscellaneous Items	142.7	40	120.2	76.92307692
73	Expense per Miscellaneous Item	$ 0.10	$ 0.02	$ 0.10	$ 0.02
74	Total	$ 13.66	$ 0.79	$ 11.50	$ 1.51
75	Number of Support Items	33.4	8.2	28.1	15.76923077
76	Expense per Support Item	$ 7.55	$ 6.14	$ 7.55	$ 6.14
77	Total	$ 252.39	$ 50.38	$ 0.43	$ 0.43
78	Number of Nuts and Bolts	16.8	20.1	0.2	0.173538462
79	Expense per set of Nuts and Bolts	$ 0.47	$ 0.49	$ 0.47	$ 0.49
80	Total	$ 7.91	$ 9.87	$ 0.08	$ 0.09
81					
82	Grand Total Other	$ 1,502.80	$ 637.55	$ 1,046.83	$ 1,110.72
83					
84	Total Cable Racking Material	$ 2,806.71	$ 805.43	$ 2,144.86	$ 1,433.56
85					
86	Total 45 Day Cable Racking	$ 6,911.17	$ 1,390.84		
87	Total 90 Day Cable Racking	$ 6,449.62	$ 1,321.47	$ 4,888.68	$ 2,379.20

	A	B	C	D	E
1	**Cable Racking**	**2.1 Cageless**		**3.1 Caged**	
2	Version 1.0 Created 7/12/01, 4:35:46 PM				
3	South Dakota	Major Jobs	Minor Jobs	Major Jobs	Minor Jobs
88					
89	Shipping	$ 392.63	$ 112.67	$ 300.04	$ 200.54
90	Tax 45 Day	$ 389.79	$ 78.44		
91	Tax 90 Day	$ 363.76	$ 74.53	$ 275.72	$ 134.19
92	Grand Total Cable Racking -45 day	$ 7,693.59	$ 1,581.96		
93	Grand Total Cable Racking -90 day	$ 7,206.01	$ 1,508.67	$ 5,464.45	$ 2,713.93
94					
95					
96	% of Jobs Requiring Major Cable Racking	50%		100%	
97	Average Number of Collocators in an Office	3		3	
98	Number of Bays to Spread Expense over	3			
99	Number of Bays in Standard Configuration	2			
100	% of Jobs Requiring Both Major Aerial and Major Cable Racking	73%		73%	
101					
102	% of Jobs Requiring some Cable Racking	88%		88%	
103					
104		45 Day	90 Day	90 Day	
105	Total Cable Racking 3 Bays	$ 2,782.92	$ 2,624.08	$ 3,637.58	
106					
107	% of Aerial Support used for Cable Racking	75%		75%	
108	Amount of Aerial Support assigned	$ 1,854.04	$ 1,624.60	$ 2,421.98	
109					
110					
111	**Total Expense for Cable Racking 2 Bays**	**$ 3,091.30**	**$ 2,832.45**	**$ 6,059.56**	
112					
113	**Additional Bay Expense**	**$ 1,545.65**	**$ 1,416.23**		
114					

Cell: A1

Comment: Cable Racking

Assumptions

Major cable racking job is a job requiring 4 or more racking strands.

All other jobs with cable racking costs are minor jobs

Minor jobs will occur on all collocations with the same frequency as COVAD jobs

The frequency of the need for major cable racking jobs is directly related to the frequency for the need for major aerial support jobs

The COVAD jobs reflect a reasonable relationship between major cable racking jobs and major aerial support jobs for all offices

Cable racking costs will be determined on a per collocator basis

Calculations

Cost for cable racking = B * average cost for a major cable racking job + ((total number of jobs with cable racking/total number of jobs)- B)* coverage cost of minor cable racking jobs, Where: B=(Number of major cable racking jobs/ Number of major aerial support jobs)*% of the time a major aerial support job is required/# collocators

	A	B	C	D
1	**Space Rent**			
2	**Investment**			
3	Version 1.0 Created 7/12/01, 4:35:46 PM			
4	South Dakota			
5	Land Investment		**$7.20**	
6	Building Investment		**$163.24**	
7				
8				
9	**SUMMARY OF NUMBERS**			
10	Capital $ for RRCN			
11	Typical Central Office Model	=	8000	RSF
12	RS Means Median Unit Cost 4500 GSF	=	$135.00	GSF
13	Building Construction RRCN	=	$130.82	RSF
14	Site Work & Landscape	=	$18.86	RSF
15	97 Construction Cost Subtotal	=	$149.68	RSF
16	RS Means 97 to 98 Cost Escalation	=	2.50%	
17	98 Construction Cost Subtotal	=	$153.42	RSF
18	Land Purchase 1 Acre	=	$7.20	RSF
19	Architectural Fee 15%	=	$24.09	RSF
20	USWC Project Management 5%	=	$9.24	RSF
21	Typical CO Project RRCN	=	$193.95	RSF
22	Mechanical & Electrical Delivery Cost Adjustment	=	($23.51)	RSF
23	Typical CO Project ARRCN	=	$170.44	RSF
24	**RSF = Rentable Square Foot			
25	**RRCN = Rentable Reconstruction Cost New			
26	**ARRCN = Adjusted Rentable Reconstruction Cost New			

	A	B	C	D	E	F
1	Version 1.0 Created 7/12/01, 4:35:46 PM					
2						
3	**Quotation Preparation Fee**					
4						
5					NonRecurring Expense	
6						
7		2.3 Quotation Preparation Fee - Cageless			$ 3,174.25	
8						
9		3.4 Quotation Preparation Fee - Caged			$ 3,451.33	

Costs for A & B DC Feeds to equipment,

in collocated space, from BDFB or power board,

Averaged for 5 actual sites

Version 1.0 Created 7/12/01, 4:35:46 PM

South Dakota	Costs for Caged Physical Collocation								
Site	**20 A**	**30 A**	**40 A**	**60 A BDFB**	**60 A PBD**	**100 A**	**200 A**	**300 A**	**400 A**
Bellevue Sherwood, WA	$48.24	$49.15	$54.71	$76.20	$41.27	$67.30	$80.76	$156.66	$152.41
Seattle Duwamish, WA	$47.53	$47.58	$67.36	$76.82	$61.32	$72.73	$140.52	$285.64	$423.82
Westminster, CO	$46.32	$65.84	$65.86	$75.31	$60.61	$71.76	$140.54	$283.88	$421.76
Crystal, MN	$62.45	$62.48	$71.88	$142.96	$68.97	$140.06	$278.89	$416.65	$553.84
Portland Alpine, OR	$43.66	$49.21	$69.37	$69.44	$43.81	$63.39	$145.72	$144.15	$286.92
Average $/ft	$49.64	$54.85	$65.84	$88.14	$55.19	$83.05	$157.29	$257.40	$367.75
Averaged Cost	**$4,106**	**$4,537**	**$5,446**	**$7,291**	**$10,108**	**$15,208**	**$28,803**	**$47,136**	**$67,344**
Shipping	$229.78	$253.90	$304.73	$408.00	$565.58	$850.98	$1,611.69	$2,637.53	$3,768.33
Tax	$ 231.60	$ 255.91	$ 307.15	$ 411.23	$ 570.07	$ 857.73	$1,624.48	$2,658.46	$3,798.23
Total	$4,568	$5,047	$6,058	$8,111	$11,243	$16,917	$32,039	$52,432	$74,911

Average 60 A Caged Physical feed cost **$9,108**

Shipping	$509.66
Tax	$ 513.71
Total	**$10,131.63**

Assumptions		
inflation/apprec. rate	2.0%	
appreciated year	1999	
base cost year	1999	
avg <60 A Physical run	83	ft.
avg Virtual/Cageless run	71	ft.
avg >60 A run	183	ft.
60 A feeds from BDFB	35%	

	Installation	
1/0 thru 4/0 - #2 H-Tap	$4.66	ea.	$35.18	ea.
350-750 kcmil - 1/0-4/0 H-Tap	$15.22	ea.	$49.50	ea.
350-750 kcmil - #2 H-Tap	$29.32	ea.	$35.18	ea.
kcmil - kcmil H-Tap	$30.54	ea.	$49.50	ea.
#6 AWG lug	$0.24	ea.	$22.79	ea.
#4 AWG lug	$1.22	ea.	$22.79	ea.
#2 AWG lug	$2.26	ea.	$35.18	ea.
1/0 lug	$2.68	ea.	$35.18	ea.
2/0 lug	$4.15	ea.	$35.18	ea.
4/0 lug	$5.80	ea.	$35.18	ea.
350 kcmil lug	$10.72	ea.	$49.50	ea.
500 kcmil lug	$12.44	ea.	$49.50	ea.
750 kcmil lug	$28.76	ea.	$49.50	ea.
#6 AWG cost	$0.55	/ft.	$2.72	/ft.
#4 AWG cost	$0.88	/ft.	$3.31	/ft.
#2 AWG cost	$1.97	/ft.	$3.31	/ft.
1/0 AWG cost	$3.12	/ft.	$4.85	/ft.
2/0 AWG cost	$3.31	/ft.	$4.85	/ft.
4/0 AWG cost	$4.67	/ft.	$4.85	/ft.
350 kcmil cost	$4.82	/ft.	$9.09	/ft.
500 kcmil cost	$7.16	/ft.	$9.09	/ft.
750 kcmil cost	$12.54	/ft.	$21.41	/ft.
25 A fuse	$17.51	ea.	$9.90	ea.
30 A fuse	$18.22	ea.	$9.90	ea.
40 A fuse	$18.94	ea.	$9.90	ea.
50 A fuse	$19.65	ea.	$9.90	ea.
60 A fuse	$20.37	ea.	$9.90	ea.
75 A fuse	$21.29	ea.	$9.90	ea.

	A	B	C	D	E	F	G	H	I	J
60	75 A fuse/brkr avg	$47.40	ea.	$21.79	ea.					
61	80 A fuse/brkr avg	$48.70	ea.	$21.79	ea.					
62	90 A fuse/brkr avg	$75.15	ea.	$21.79	ea.					
63	100 A fuse/brkr avg	$92.40	ea.	$21.79	ea.					
64	125 A fuse/brkr avg	$104.75	ea.	$21.79	ea.					
65	150 A fuse/brkr avg	$116.75	ea.	$21.79	ea.					
66	200 A fuse/brkr avg	$148.00	ea.	$21.79	ea.					
67	250 A fuse/brkr avg	$179.00	ea.	$21.79	ea.					
68	300 A fuse/brkr avg	$218.15	ea.	$21.79	ea.					
69	400 A fuse/brkr avg	$235.80	ea.	$21.79	ea.					
70	500 A fuse/brkr avg	$273.75	ea.	$21.79	ea.					
71	600 A fuse/brkr avg	$307.50	ea.	$21.79	ea.					
72	H-Tap covers	$53.98	/job							
73	miscellaneous material costs	$183.13	/job							
74	Nuts & Bolts for Power	$9.14	/job							
75	Alarm fuses	$17.62	/job							
76	Heat Shrink	$17.48	/job							
77	Cable Tags	$79.25	/job							
78	BDFB loop drop	0.25	V							
79	PBD loop drop	1.00	V							

	A	B	C	D	E	F	G
1	**Costs for Grounding feed and CLGB to CLEC Area,**						
2	**in collocated space, from nearest COGB,**						
3	**Averaged for 5 actual sites**						
4	Version 1.0 Created 7/12/01, 4:35:46 PM						
5	South Dakota	**Cost/ft.**					
6	**cable used**	**# 2 AWG**	**1/0 AWG**	**4/0 AWG**	**350 kcmil**	**500 kcmil**	**750 kcmil**
7							
8	Denver Sullivan	$8.82	$16.33	$18.52	$24.02	$26.76	$44.43
9	Burnsville, MN	$7.04	$11.86	$13.71	$18.61	$21.14	$36.83
10	Phoenix	$6.55	$10.63	$12.38	$17.12	$19.59	$34.73
11	Seattle	$6.69	$10.98	$12.76	$17.55	$20.03	$35.33
12	Portland Atlantic	$7.29	$12.49	$14.38	$19.37	$21.92	$37.89
13							
14	**Average $/ft.**	**$7.28**	**$12.46**	**$14.35**	**$19.33**	**$21.89**	**$37.84**
15	Shipping	$0.37	$0.63	$0.72	$0.97	$1.10	$1.91
16	Tax	$0.41	$0.70	$0.81	$1.09	$1.23	$2.13
17	**Total**	**$8.06**	**$13.79**	**$15.88**	**$21.40**	**$24.23**	**$41.88**
18							
19	(averaged costs are appreciated for inflation if costs are not from the current year)						
20							
21							
22							
23	**Assumptions**						
24	inflation/apprec. rate	2%					
25	appreciated year	1999					
26	base cost year	1999		**Installation**			
27	green #6 AWG cost	$0.67	/ft.	$2.72	/ft.		
28	green #2 AWG cost	$2.19	/ft.	$3.31	/ft.		
29	green 1/0 AWG cost	$3.12	/ft.	$4.85	/ft.		
30	green 4/0 AWG cost	$4.67	/ft.	$4.85	/ft.		
31	green 350 kcmil cost	$4.82	/ft.	$9.09	/ft.		
32	green 500 kcmil cost	$7.16	/ft.	$9.09	/ft.		
33	green 750 kcmil cost	$8.80	/ft.	$21.41	/ft.		
34	1/0 thru 4/0 - #6 H-Tap	$4.66	ea.	$35.18	ea.		
35	350-750 kcmil - 1/0-4/0 H-Tap	$15.22	ea.	$49.50	ea.		
36	350-750 kcmil - #2 H-Tap	$29.32	ea.	$35.18	ea.		
37	kcmil - kcmil H-Tap	$30.54	ea.	$49.50	ea.		
38	#6 AWG lug	$0.24	ea.	$22.79	ea.		
39	#2 AWG lug	$2.26	ea.	$35.18	ea.		
40	1/0 lug	$2.68	ea.	$35.18	ea.		
41	4/0 lug	$5.80	ea.	$35.18	ea.		
42	350 kcmil lug	$10.72	ea.	$49.50	ea.		
43	500 kcmil lug	$12.44	ea.	$49.50	ea.		
44	750 kcmil lug	$28.76	ea.	$49.50	ea.		
45	H-Tap covers	$3.37	/job				
46	miscellaneous material costs	$45.78	/job				
47	Nuts & Bolts for Grounding	$2.28	/job				

	A	B	C	D	E	F	G
23	**Assumptions**						
48	Heat Shrink	$4.37	/job				
49	Cable Tags	$19.81	/job				
50	CLGB cost	$124.92					
51	E&I 357C default factor	$1.52					
52	#2 used for:	Cageless & Virtual					
53	#2&1/0 avg cage size	100	ft2				
54	4/0 avg cage size	200	ft2				
55	350 avg cage size	300	ft2				
56	500 avg cage size	400	ft2				
57	750 avg cage size	500	ft2 +				
58	cage ground size	6	AWG				
59	# cage grounders	2					
60	avg run for cageless gnd	76					

	A	B	C
1	Version 1.0 Created 7/12/01, 4:35:46 PM		
2	South Dakota		
3	**Virtual Expanded Interconnection (VEIC) - Shelf**		
4	**Investment**		
5			
6			
7			
8	A	Iron Work	$255.00
9	B	Power Panel	$499.00
10	C	Total (A+B)	$754.00
11	D	Utilization	85%
12	E	Investment With Utilization (C/D)	$887.06
13	F	Number of Shelves Per Rack	6
14	G	Material Price Per Shelf (E/F)	$147.84
15	H	Sales Tax	$8.34
16	I	Material Price Per Shelf (E/F)	**$156.18**

	A	B	C	D	E
1					
2	**Qwest 1999 CO-LOCATION LABOR RATES PER HALF HOUR**				
3	**Expense**				
4	Version 1.0 Created 7/12/01, 4:35:46 PM				
5	South Dakota				
6		1999	1999		
7		STRAIGHT TIME	TIME & 1/2 RATE		
8		PER HALF HR.	PER HALF HR.		
9					
10	P42-DSOC MTCE./TRAINING	**$20.27**	**$27.12**	maintenance or training	
11	P70-QUALITY INSPEC./INSTALL.	**$23.11**	**$29.76**	inspector or installation	
12	E20-DETAIL ENGINEERING	**$21.87**	**$28.23**		
13					
14					
15					
16					
17					
18	**P42 CENTRAL OFFICE/TRANSMISSION/SIGNALLING EQUIP. MAINTENANCE**				
19	(Account 6534.11)				
20					
21	Used for work and costs associated with repairing, rearranging,				
22	maintaining, and acceptance testing local and toll Central Office				
23	switching and power equipment, and transmission and signalling				
24	equipment. Shown below are details for:				
25					
26	Central Office Equipment Maintenance functions:				
27	- Repairing, rearranging, and maintaining local switching equipment				
28	requiring circuit analysis				
29	- Performing the inventory of Central Office equipment and network				
30	facilities for the purification of records for mechanized systems				
31	- Testing and accepting Central Office equipment				
32	- Performing processing activities for the local Central Office				
33	maintenance effort				
34	- Typical activities include:				
35	- Logging trunk orders, service orders, cable transfers, line				
36	transfers, and Central Office estimates				
37	- Referring troubles to local Central Office maintenance forces				
38	- Ordering tools and local Central Office maintenance materials				
39	- -Performing other similar local Central Office maintenance				
40	work				

	A	B	C	D	E
41	**P42 CENTRAL OFFICE/TRANSMISSION/SIGNALLING EQUIP. MAINTENANCE (Cont'd)**				
42					
43	Transmission and Signalling Equipment Maintenance functions:				
44	- Repairing, rearranging, and maintaining transmission and				
45	signalling equipment				
46	- Repairing, rearranging, and maintaining circuits, carrier				
47	(repeater) and radio equipment requiring circuit analysis at				
48	Central Office or remote locations				
49	- Repairing, rearranging, and maintaining testboards and local test				
50	desks				
51	- Performing circuit analysis at manual toll, private, and special				
52	service test desks				
53	- Performing the inventory of Central Office equipment and network				
54	facilities for the purification of records for mechanized systems				
55	- Performing surveillance, analysis, repair, maintenance, and				
56	acceptance of Automated Transmission Terminal System components				
57	- Testing circuit equipment in connection with trouble clearance,				
58	routine maintenance, and circuit order activity				
59	- Performing work activities associated with placing trunks and				
60	circuits into service				
61	- Rearranging circuit equipment (e.g., VF patch board) to restore				
62	service				
63	- Repairing, rearranging, maintaining, and accepting Central Office				
64	power equipment requiring circuit analysis				
65	- Performing processing activities for the Central Office				
66	transmission and signalling equipment maintenance effort				
67	- Typical activities include:				
68	- Complying and preparing service measurement reports				
69	- Ordering tools and Central Office maintenance materials				
70	- Processing all types of transmission and signalling equipment				
71	trouble reports				
72	- Logging trunk orders, toll service orders, cable transfers,				
73	line transfers, and Central Office estimates				
74	- Processing and/or filing layout records, technical documents,				
75	and Central Office equipment and location records				
76	- Selecting available equipment for assignment to circuits				
77	after receipt of special service or trunk orders				
78					
79	Exclusions:				
80	- For testing circuits using Outside Plant conductors or radio				
81	channels at testboards or other Central Office equipment				
82	locations, see PWCC P40.				
83	- For testing of local exchange and special service circuits from a				
84	local test desk and performing associated processing activities,				
85	see PWCC P10.				
86	- For testing of trunks and related equipment and facilities from				
87	toll testboards on mechanized test systems (e.g., CAROT) and				
88	performing processing activities, see PWCC P40.				

	A	B	C	D	E
89					
90					
91	**P70 CENTRAL OFFICE EQUIPMENT INSTALLATION**				
92	(Account 6534.11)				
93					
94	Used for work and costs associated with the following Central Office				
95	Equipment Installation functions:				
96	- Installing Central Office equipment including test desks, frames,				
97	and power equipment				
98	- Performing processing activities				
99					
100	Note:				
101	- This PWCC should be assigned only to employees performing Central				
102	Office installations in lieu of vendors.				
103					
104	**E20 NETWORK AND CENTRAL OFFICE PLANNING AND ENGINEERING**				
105		(Account 6535.11)			
106					
107	Used for work and costs associated with tactical planning and design				
108	engineering for the Network and Central Offices. Included are:				
109					
110	Central Office Switching				
111					
112	Tactical planning and design engineering for analog and digital				
113	electronic switching; for local, toll, tandem, and operator systems;				
114	and for equipment space, power, distributing frame,				
115	alarm/surveillance, network switching, technical service,				
116	maintenance, and network plug-in administration.				
117					
118	Transmission				
119					
120	Tactical planning and design engineering for transmission systems				
121	(radio, carrier, and multiplex systems) for interoffice facilities.				
122					
123	Note:				
124	For transmission systems associated with local loop, see PWCC E30.				
125	Trunking				
126	Tactical planning and design engineering for exchange and toll				
127	trunking requirements for message circuits.				

	A	B	C	D	E	F	G
1	Version 1.0 Created 7/12/01, 4:35:46 PM						
2							
3	**Factor Description**	***South Dakota***					
4		**RTU**					
5	**Digital Electronic Expense - RTU 377C**	0.000000	Not Used				
6	***Direct Costs***						
7							
8	***Directly Assigned***						
9		**Direct**					
10	**Product Management Expense**	0.025565					
11	**Sales Expense**	0.009225					
12	**Product Advertising Expense**	0.000000					
13	**Business Fees (Other Operating Taxes)**	0.002025					
14	***Directly Assigned Costs***						
15							
16	***Total Direct***						
17							
18	***Directly Attributed***	**Attributed**					
19	**Network Operations**	0.040880					
20	**Network Support Assets**	0.015364					
21	**General Support Assets**	0.069508					
22	**General Purpose Computers**	0.034714					
23	**Uncollectible - Interconnect**	0.000401					
24	**Accounting and Finance Expense**	0.008839					
25	**Human Resources Expense**	0.008145					
26	**Information Management Expense**	0.057009					
27	**Intangibles**	0.002091					
28							
29							
30							
31							
32	***Common***	**Common**					
33	**Executive Expense**	0.007805					
34	**Planning Expense**	0.000580					
35	**External Relations Expense**	0.013029					
36	**Legal Expense**	0.006148					
37	**Other Procurement Expense**	0.002359					
38	**Research and Development Expense**	0.000036					
39	**Other General and Admin Exp**	0.015212					
40							
41							
42							
43							
44	These Factors are calculated by the Factors Module of CM.						
45	See the initial screen or the User Manual for instructions on making changes that effect these factors.						
46	These Factors are used in section B.						

Cell: A5

Comment: The Switching Right-To-Use (RTU) factor estimates the expensed RTU switching fees that make up a portion of the annual costs associated with digital switches. The factor numerator is based on the field reporting code (FRC) of 377M (Digital Electronic Switching Maintenance) and expenditure type codes of 61A (upgrades of operating system RTU), 61C (recurring RTU fees), and 61F (upgrades of application RTU). The denominator consists of the ending balance for FRC 377C (in Account 2212, Digital Electronic Switching).

Cell: A8

Comment: Directly assigned factors are used to directly assign expenses to a product or service. That is, accounting records allow expenses to be tracked down to a particular product or service.

Cell: A10

Comment: Product Management Expense Factor

Product Management Expense, account 6611: Product management includes 1) Rate and Tariff - Development which are the costs of providing new or revised tariff offerings, making studies in support of specific dockets and to identify and analyze costs for regulatory activities and 2) Market Forecast - Management Administration and Analysis which are the costs associated with analyzing all forecasts of current and future market conditions, presenting a detailed customer profile, establishing and tracking revenue objectives, as well as performing basic office services. Product management in a interconnect marketplace will be similar to that of the retail market. In fact it will be like the product management that U S WEST performs today in its Carrier market unit which manages wholesale services such as switched and dedicated access products. In this model, U S WEST used the cost of its carrier marketing product management product group. These expenses are also adjusted with cost savings and inflation factors to bring expenses to study year.

Cell: A11

Comment: Sales Expense Factor

Sales Expense, account 6612: Included in this factor are costs incurred with performing sales contact work, servicing and implementation activities for the purpose of selling products and services to accounts in a particular market or segment. Sales expense in a interconnect marketplace will be similar to that of the retail market. In fact it will be like the Sales expense that U S WEST performs today in its Carrier market unit which manages wholesale services such as switched and dedicated access products. In this model U S WEST used the cost of its carrier marketing sales product group. These expenses are also adjusted with cost savings and inflation factors to bring expenses to study year.

Cell: A12

Comment: Product Advertising Expense Factor

Product advertising expense, account 6613: Includes costs incurred in developing and implementing promotional strategies to stimulate the purchase of products and services. This excludes non product related advertising, such as corporate image, stock and bond issue and employment advertisements, which is included in the appropriate functional accounts. Product advertising is not included in U S West's TELRIC studies. Product advertising is avoided for interconnect services and set to zero.

Cell: A13

Comment: The Business Fees factor estimates the expenses associated with other operating taxes. The factor numerator is based on account 7240 (Operating Other Taxes), specifically 7240.2 through 7240.9. (Reference: Factor Development - Section A1.) The sub accounts of .2 through .9 represent gross receipts taxes, cost of franchises, capital stock taxes, superfund taxes and other taxes. The denominator consists

of the sum of the Total Directly Assigned Expenses, Product Management Expense, and Sales Expense.

Business fees is calculated by multiplying the Total Investment Based Costs +Other Direct Expense Inputs + Product Management + Sales Expense + Product Advertising Expense by the Business fees factor.

Cell: A18
Comment: Directly attributed factors are used to indirectly assign or attribute expenses to a product or service. That is, accounting records do not track investments and expenses down to a product level. For example, switching equipment expenses and investments are used for a number of services. Since this equipment is shared by many products and services, the cost of switching cannot be directly assigned to any of them. However, it can be indirectly assigned or attributed through an allocation process.

Cell: A19
Comment: Network Operations
Network Operations: The numerator for this factor is Account 6532, 6534 and 6535.

Account 6532, includes costs incurred in network administration. This includes such activities as controlling traffic flow, administering traffic measuring and monitoring devices, assigning equipment and load balancing, collecting and summarizing traffic data, administering trunking and assigning interoffice facilities and circuit layout work.

Account 6534, includes costs incurred in the general administration of plant operations. This includes supervising plant operations, planning, coordinating and monitoring plant operations; and performing staff work such as developing methods and procedures, preparing and conducting training and coordinating safety programs.

Account 6535, includes costs incurred in the general engineering of the telecommunications plant which are not directly chargeable to an undertaking or project. This includes developing input to the fundamental planning process, performing preliminary work or advance planning in connection with potential undertakings, and performing special studies of an engineering nature.

These expenses are adjusted with cost savings and inflation factors to bring expenses to study year.

Cell: A20
Comment: Network Support Assets
Network Support Assets: Included in this factor are accounts 2112-2116.

Account 2112, Motor Vehicles includes the original cost of motor vehicles of those types which are designed and routinely licensed to operate on public streets and highways.

Account 2113, Aircraft includes the original cost of company owned aircraft and any associated equipment and furnishing installed as an integral part of the aircraft.

Account 2114, Special Purpose Vehicles includes the original cost of special purpose vehicles. Special purpose vehicles are self propelled and are therefore independent upon another vehicle's engine for power.

Account 2115, Garage Work Equipment includes the original cost of tools and equipment used to maintain items included in Accounts 2112, 2113, 2114. Items such as Air compressors, car hoists, garage jacks,

gasoline pumps etc.

Account 2116, Other Work Equipment includes the original cost of power operated equipment, general purpose tools and other items of work equipment.

The investment in these accounts are converted to expenses to calculate a factor. This is done by multiplying the investment dollars by an Ad Valorem factor, and Capital Costs (Cost of Money, Income Taxes and Depreciation). These investments were also adjusted by a Current Cost to Book Cost ratio and TPI's, to bring expenses to study year.

Cell: A21
Comment: General Support Assets
General Support Assets: Included in this factor are accounts 2111, 2121-23,1220, 2681.1,.9, 2682.1.

Account 2111, Land includes the original cost of all land held in fee and of easements, and similar rights in land having a term of more than one year used for purposes other than the location of outside plant or externally mounted central office equipment.

Account 2121, Buildings includes the original cost of buildings, and the cost of all permanent fixtures, machinery, appurtenances and appliances installed as a part thereof. It shall include costs incident to the construction or purchase of a building and to securing possession and title.

Account 2123, Office Equipment includes the original cost of office equipment in offices, shops and all other quarters. Account 1220, Inventories includes the cost of material and supplies held in stock and inventories of goods held for resale or lease.

Account 2681.1,9, Land and Buildings and Other are: amounts recorded in this account at the inception of a capital lease shall be equal to the original cost, if known, or to the present value not to exceed fair value, at the beginning of the lease term, of minimum lease payments during the lease term, excluding that portion of the payments representing executory costs to be paid by the lessor, together with any profit thereon.

Account 2682.1, Land & Buildings, this account shall include the original cost of lease hold improvements made to telecommunications plant held under a capital or operating lease, which are subject to amortization treatment. The investment in these accounts are converted to expenses to calculate a factor. This is done by multiplying the investment dollars by an Ad Valorem factor, and Capital Costs (Cost of Money, Income Taxes and Depreciation) where applicable. These investments were also adjusted by a Current Cost to Book Cost ratio and TPI's, to bring expenses to study

Cell: A22
Comment: General Purpose Computers
General Purpose Computers: Included in this factor are accounts 2124, 2681.3 & 4 and 2682.2.

Account 2124, General Purpose Computers includes the original cost of computers and peripheral devices which are designed to perform general administrative information processing activities.

Account 2681.3 & 4 Computers and Computer Software Capital leases, includes the amounts recorded in this account at the inception of a capital lease shall be equal to the original cost, if known, or to the present value not to exceed fair value, at the beginning of the lease term, of minimum lease payments during the

lease term, excluding that portion of the payments representing executory costs to be paid by the lessor, together with any profit thereon.

Account 2682.2 Computer Leasehold Improvements, this account shall include the original cost of lease hold improvements made to telecommunications plant held under a capital or operating lease, which are subject to amortization treatment. The investment in these accounts are converted to expenses to calculate a factor. This is done by multiplying the investment dollars by an Ad Valorem factor, and Capital Costs (Cost of Money, Income Taxes and Depreciation) where applicable. These investments were also adjusted by a Current Cost to Book Cost ratio and TPI's, to bring expenses to study year where applicable.

Cell: A23
Comment: Uncollectible - Interconnect
Uncollectible - Interconnect: included in this factor is Account 5301.4 & .5 and Account 5302.

Account 5301.4 Interstate - Carrier Access Services (Uncollectibles) include the accruals to the reserve to provide for the write-offs of uncollectible interstate operating revenues arising from CABS services.

Account 5301.5 Intrastate - Carrier Access Services (Uncollectibles) include the accruals to the reserve for the write-offs of uncollectible intrastate operating revenues arising from CABS services.

Account 5302 Uncollectible Revenue - Other this account shall be charged with amounts concurrently credited to account 1190, Other Accounts Receivable, or to Account 1191, Accounts Receivable Allowance - Other, when such allowance is maintained.

Cell: A24
Comment: Accounting and Finance Expense
Accounting and Finance Expense: Included in this factor is Account 6721, Accounting and Finance Expense. This includes the costs incurred in providing accounting and financial services. These expenses are also adjusted with cost savings and inflation factors to bring expenses to study year.

Cell: A25
Comment: Human Resources Expense
Human Resources Expense: Included in this factor is Account 6723, Human Resources Expense. This includes the costs incurred in performing personnel administration activities such as Equal Employment Opportunity and Affirmative Action Programs, General Employment Services, Employee data for forecasting, planning and reporting etc. These expenses are also adjusted with cost savings and inflation factors to bring expenses to study year.

Cell: A26
Comment: Information Management Expense
Information Management Expense, account 6724: Included in this factor are costs incurred in planning, developing, testing, implementing and maintaining data bases and application systems for general purpose computers. These expenses are also adjusted with cost savings and inflation factors to bring expenses to study year.

Cell: A27
Comment: Intangibles
Intangibles, Account 2690: Includes the cost of organizing and incorporating the company, the original cost of government franchise, the original cost of patent rights, and other intangible property having a life of more than one year and uses in connection with the company's telecommunications. The investment in this account is converted to expense to calculate the factor. This is done by multiplying the investment dollars by Cost of Money & Income Tax factors. These expenses are also adjusted with inflation factors to bring expenses to study year.

Cell: A32
Comment: Common factors are developed for expenses that cannot be directly or indirectly assigned to a service but are needed for the operation of the business that provides the service (i.e., executive expense.)

Cell: A33
Comment: Executive Expense
Executive Expense, account 6711: Included in this numerator is executive expense which shall include costs incurred in formulating corporate policy and in providing overall administration and management. These expenses are also adjusted with cost savings and inflation factors to bring expenses to study year.

Cell: A34
Comment: Planning Expense
Planning Expense, account 6712: Included in this factor are costs incurred in developing and evaluating long-term courses of action for the future operations of the Company. This includes performing corporate organization and integrated long-range planning, including management studies, options and contingency plans, and economic strategic analysis. These expenses are also adjusted with cost savings and inflation factors to bring expenses to study year.

Cell: A35
Comment: External Relations Expense
External Relations Expense, account 6722: Included in this factor are costs incurred in maintaining relations with government, regulators, other companies and the general public. These expenses are also adjusted with cost savings and inflation factors to bring expenses to study year.

Cell: A36
Comment: Legal Expense
Legal Expense, account 6725: Included in this factor are costs incurred in providing legal services. This includes conducting and coordinating litigation, providing guidance on regulatory and labor matters, preparing, reviewing and filing patents and contracts and interpreting legislation. These expenses are also adjusted with cost savings and inflation factors to bring expenses to study year.

Cell: A37
Comment: Other Procurement Expense
Other Procurement Expense, account 6726: Included in this factor are costs incurred in procuring material and supplies, including office supplies. These expenses are also adjusted with cost savings and inflation factors to bring expenses to study year.

Cell: A38

Comment: Research and Development Expense

Research and Development Expense, account 6727: Included in this factor are costs incurred in making planned search or critical investigation aimed at discovery of new knowledge. These expenses are also adjusted with cost savings and inflation factors to bring expenses to study year.

Cell: A39

Comment: Other General and Administrative Expenses

Other General and Administrative Expenses, account 6728: Included in this factor are costs incurred in performing general administrative activities not directly charged to the user, and not provided for in other accounts. This includes providing general reference libraries, food services, archives, general security investigation services, operating official private branch exchanges in the conduct of the business and telecommunications and mail services. These expenses are also adjusted with cost savings and inflation factors to bring expenses to study year.

Version 1.0 Created 7/12/01, 4:35:46 PM								
				CAPCOST FACTORS				
		Cost of Money	0.1014				State:	South Dakota
		Cost of Debt	0.075					
		Debt Ratio	0.4					
		Discount Rate	0.1014					
			Depreciation	Cost of Money	Income Tax	Total_CAPCOST	Ad_Valorem	Maintenance
Acct	FRC	Account Name	A	B	C	D	E	F
2111	20C	Land	0.000000	0.096506	0.036495	0.133002	0.008613	0.02235346
2212	164C	Motor Vehicles	0.111497	0.049522	0.018727	0.179746	0.008613	
2112	1364C	Aircraft	0.000000	0.000000	0.000000	0.000000	0.008613	
2114	464C	Spec. Purpose Vehicles	0.064286	0.054508	0.020613	0.139407	0.008613	
2115	264C	Garage Work Equipment	0.071429	0.052772	0.019956	0.144156	0.008613	
2116	564C	Other Work Equipment	0.065714	0.054161	0.020482	0.140357	0.008613	
2121	110C	Building	0.025821	0.074869	0.028313	0.129003	0.008613	0.02235346
2122	161C	Furniture	0.075688	0.049290	0.018640	0.143619	0.008613	
2123	261C	Office Equipment	0.107909	0.050794	0.019208	0.177912	0.008613	
2124	361C	General Purpose Comp.	0.164850	0.047620	0.018008	0.230478	0.008613	
2212	377C	Digital Switch	0.108910	0.045445	0.017186	0.171541	0.008613	0.020938852
2220	117C	Operator Systems	0.127964	0.045130	0.017067	0.190161	0.008613	0.036429778
2231	67C	Radio Microwave	0.107035	0.052004	0.019666	0.178705	0.008613	0.005876688
2232.1	157C	Digital Data System	0.101968	0.044769	0.016930	0.163666	0.008613	0.004850385
2232.2	257C	Pair Gain—Digital	0.109717	0.045455	0.017189	0.172361	0.008613	0.011820211
2232.2	257CS	Pair Gain—Digital	0.109717	0.045455	0.017189	0.172361	0.008613	0.011420058
2232.2	257CSP	Pair Gain—Digital	0.109717	0.045455	0.017189	0.172361	0.008613	0.011420058
2232.3	357C	Other Digital Equipment	0.109717	0.045455	0.017189	0.172361	0.008613	0.032898273
2232.3	357CS	Other Digital Equipment	0.109717	0.045455	0.017189	0.172361	0.008613	0.03249812
2232.4	457C	Pair Gain—Analog	0.160932	0.045151	0.017075	0.223158	0.008613	0.038881409
2232.5	57C	Other Analog Equipment	0.160932	0.045151	0.017075	0.223158	0.008613	0.012524011
2351	188C	Public Telephones	0.118750	0.056788	0.021475	0.197013	0.008613	
2362	858C	Chan. Term. Eq.	0.131250	0.052536	0.019867	0.203653	0.008613	0.022759
2411	1C	Poles	0.122572	0.036893	0.013952	0.173417	0.008613	0.032459537
2421.11,.21	52C	Aerial Cbl Metallic	0.105201	0.054376	0.020563	0.180141	0.008613	0.131511374
2421.11	42C	Aerial Drop	0.105201	0.054376	0.020563	0.180141	0.008613	0.131511374
2421.12,.22	852C	Aerial Cbl Nonmetallic	0.082636	0.054888	0.020757	0.158281	0.008613	0.020059363
2422.11,.21	5C	UG Cbl Metallic	0.090987	0.056203	0.021254	0.168443	0.008613	0.024152779
2422.12,.22	85C	UG Cbl Nonmetallic	0.070742	0.056557	0.021388	0.148687	0.008613	0.007097388
2423.11,.21	45C	Buried Cbl Metallic	0.060902	0.057059	0.021578	0.139540	0.008613	0.047716977
2423.11	35C	Buried Drop	0.060902	0.057059	0.021578	0.139540	0.008613	0.047716977
2423.12,.22	845C	Buried Cbl Nonmetallic	0.060902	0.057059	0.021578	0.139540	0.008613	0.011262996
2424.11,.21	6C	Submarine Cbl., Exch., Metallic	0.053220	0.058893	0.022271	0.134384	0.008613	0.006884077
2424.12,.22	86C	Submarine Cbl., Exch., Nonmetallic	0.053220	0.058893	0.022271	0.134384	0.008613	0.006884077
2426.1	62C	Intrabuilding Cbl., Exch., Metallic	0.062692	0.058372	0.022074	0.143138	0.008613	0.023289142
2426.2	862C	Intrabuilding Cbl., Exch., Nonmetallic	0.062692	0.058372	0.022074	0.143138	0.008613	0.006920307
2431	3C	Aerial Wire	0.274000	0.091689	0.034674	0.400363	0.008613	0.010002078
2441	4C	Conduit System	0.021443	0.064600	0.024429	0.110473	0.008613	0.005558157
	257CP	Pair Gain—Digital	0.109717	0.045455	0.017189	0.172361	0.008613	0.011820
These are investment factors. They are applied to investments to calculate investment related costs.								
Please refer to the user manual before adjusting these factors.								
Depreciation, post tax income and income tax expense are calculated by the CAPCOST module of ICM.								
To effect changes in these factors, adjust the CAPCOST input parameters.								
Ad Valorem and maintenance are calculated by the factors module. Adjust the input parameters to the factors module to cause changes in these Factors.								
These factors are applied in the Investment Cost Calculation spreadsheet.								
		Power Maint Expense Adj	0.003256	Expense Factors module.xls'Factor Development'H45				
		Sales Tax Factor	0.0564					

Cell: D7
Comment: Depreciation

Two types of depreciation are involved in the determination of recurring capital costs - book depreciation and tax depreciation. Book depreciation is the repayment of invested capital and is a direct component of capital costs. On the other hand, tax depreciation is not a component of capital cost, but is a schedule of expense deductions used in determining income tax expense. Both depreciation amounts must be separately calculated because most likely, they will differ in timing and amount.

Book depreciation amounts are determined by: (1) total investment, less net salvage, in assets: and (2) estimated life characteristics. The life characteristics are average economic life and survivor shape that are either anticipated or actually experienced at U S West Communications. Several methods are available to calculate book depreciation, however at U S West Communications, the straight-line equal-life group (ELG) method is applied. For service costs studies, ELG allows the depreciation amounts per unit to be "deaveraged" within each vintage of a category.

Tax depreciation is of interest because of its effect on income taxes. Tax depreciation is calculated separately from book depreciation because amounts and timing will differ from book depreciation. This is because, for example, income tax regulations permit using accelerated tax depreciation on most new investments. With accelerated tax depreciation, tax deduction amounts are claimed in greater amounts during the earlier years of an asset's life than during the later years.

To summarize, book depreciation repays capital and is a component cost; whereas, tax depreciation determines the expense deduction used in determining income tax liability.

Cell: E7
Comment: Post Tax Income (Return) (Cost Of Money)

Although invested capital can be repaid in various ways over its life, the capital repayment required will always be the same. However, the cost for the use of this capital varies directly with the time it takes to pay it back. An analogous situation for individuals would be the interest costs on the remaining balance of a home mortgage, which depend on the length of the mortgage. For example, more total interest is paid on a 30-year mortgage than on a mortgage lasting 25 years.

In cost studies, these interest costs are the return owed the investors for the use of their capital, and the company would need to pay this return until capital is fully repaid. The sum of the capital repayment and the associated return is called the capital recovery cost. Of course, in actual practice, investors are partially paid back directly (dividends), and the remaining capital repayment (retained earnings) is reinvested in new plant on behalf of them.

Because the assumed rate is the interest cost of an investment, it is often called the cost of money. And this cost of money is really a composite of the different returns for debt and equity capital. The proportion of debt and equity in the company's capital structure is therefore expressed as the debt ratio, and is used to calculate the composite cost of money as follows:

COMPOSITE COST OF MONEY = (DEBT RATIO X % COST OF DEBT)+(EQUITY RATIO X % COST OF EQUITY)

WHERE; EQUITY RATIO = (1-DEBT RATIO)

The composite cost of money is then used to calculate a schedule of equal payments made over time to repay both capitalized amounts, and a return amount to the investor. Even though each payment is the same, the apportionment between repayment of invested capital and return to the investor changes. The share representing invested capital repaid increases with each payment, and therefore, return to the investor decreases with each payment. Likewise, the principle portion of a home mortgage monthly payment increases each month, and the interest portion declines, even though, the total monthly payment remains the same.

The amount of money representing the return to the investors is called Post Tax Income. The title "post tax income" is somewhat of a misnomer however, since only return on equity is truly post tax income; return on debt is applied as a reduction to revenue thereby reducing taxable income used to compute income tax expense.

Cell: F7
Comment: Income Tax Expense

Along with capital repayment and return, income taxes are incurred on the return required for the equity portion of the capital. Income taxes are involved because federal and state tax regulations provide for taxing remaining income after payment of operations costs and other deductible amounts. These income taxes are then a portion of the revenue required to meet the capital costs of the undertaking.

Income tax expense does not reflect the actual taxes U S West pays; but instead, it represents the taxes that are reported as paid on the income statement. The difference between the income tax expense and the taxes owed (paid) is due to the treatment of accelerated depreciation.

Cell: G7
Comment: Total Capital Costs
In summary, total capital costs consist of three components: capital repayment (depreciation), return (post tax income) and income tax expense. The sum of the first two components, depreciation and post tax income, has been defined as capital recovery. The present worth of the capital costs is therefore the sum of the present worth of the capital recovery costs and the present worth of the tax expenses.

Cell: H7
Comment: The Ad Valorem Tax Factor is used to provide an estimate of the Ad Valorem tax costs that are associated with investments. It was developed for use in estimating the total operating expense associated with central office equipment. public coin equipment, and outside plant equipment. The data sources utilized for this are (numerator) Account 7240.1 Property Taxes and (denominator) Account 2001 Total Telephone Plant in Service.

Cell: I7
Comment: There are 23 Maintenance Factors. Each of these maintenance factors are developed on a state by state basis using expenses and investments relative to the account under study.

Maintenance factors are developed by taking the adjusted levels of 'M' expense dollars and dividing them by adjusted investment associated with a particular account. Power, subscriber line testing and trunk testing factors are added to most accounts to get the final maintenance factor. Maintenance expense is calculated by multiplying the maintenance factor times total investment for an account under study.

Cell: C54
Comment: Power Maintenance Expense Adjustment removes electrical power expenses from maintenance of collocator equipment.

Cell: C55
Comment: Sales Tax Factor
The purpose of the Sales Tax Factor is to provide an estimate of the sales tax costs that are associated with investments. The factor can be used, in conjunction with other factors and data; to develop total installed investment.

SCOPE:
Sales Tax Factors are provided for state specific, and U. S. West application.

SUMMARY:
These factors are provided by U.S. West Corporate Tax Department and represent total tax paid (state and local combined) divided by total taxable revenues from returns.

APPLICATION:
The Sales Tax Factor was developed for use in estimating the total installed investment associated with central office equipment, public coin equipment, and outside plant equipment. The Sales Tax Factor is applied to investments with other loading factors.

CENTRAL OFFICE LAND AND BUILDING								
These are not calculated in the Model								
Jan-01								
	BLDG TO SWITCH FACTOR	BLDG TO CIRCUIT FACTOR	LAND TO SWITCH FACTOR	LAND TO CIRCUIT FACTOR				
South Dakota	0.0537	0.0536	0.0014	0.0014				
This data is used by the C. Investment Cost Calculation spreadsheet to calculate the land and building investments associated with switching equipment and circuit equipment.								

Cell: A2
Comment: LAND & BUILDING
Overview

DESCRIPTION
The purpose of this study is to develop factors to estimate land investments and building investments which are capitalized as part of central office switching equipment and circuit equipment. These factors can be used, in conjunction with other factors and data, to develop total installed investments.

SCOPE
The Land Factors for switch and circuit, and the Building Factors for switch and circuit, have been developed on a state specific basis, and as a U S WEST Composite.

SUMMARY OF METHODOLOGY
The study reflects forward looking land and building investments as a percent of the central office switching investment and circuit investment. The four factors that are developed for each state are:

1. Land Factor for Switch
2. Land Factor for Circuit
3. Building Factor for Switch
4. Building Factor for Circuit

The process to calculate land and building factors is as follows:
A. Identify land, building, switching and circuit Investments and other data by state.
B. Calculate total digital central office land and building investments associated with digital central offices.
C. Convert total digital central office land and building investments to current cost of the investment using the CCBC Ratios.
D. Calculate land and building investments for the space that is actually used for digital switching and circuit equipment.
E. Calculate digital switching and circuit land and building factors.

This process is described in detail in sections A through E, below.

A. Identify land, building, switching and circuit Investments and other data by state.

The following Investments data is required to calculate the land and building factors:

Total Land and Building Investments.
Total digital switch and circuit equipment investments.

The following ratios are required to covert total investments to that related to switching and circuit equipment:

Assignable unoccupied central office space ratios.
This ratio was developed by totaling the non-assignable space and the assignable space and dividing the result into the assignable unoccupied space.
Ratio of Digital Central offices space to total building space.
Ratios of Switch to total building and Circuit to total building.

Current cost to book cost ratios (CCBC) are required to convert booked investments to current cost of placing the investments. They are as follows:

CCBC ratios for land and building investments.
CCBC ratios for digital switch and circuit equipment investments.

Sources of the data inputs are shown on the spreadsheet.

B. Calculate total digital central office land and building investments associated with digital central offices.

The study calculates total digital central office land and building investments associated with digital central offices by multiplying the ratio of digital central offices space to total building space times the total land and building investments. The calculations are as follows:

Total Digital Central Office Land Investment = Ratio Of Digital Central Offices Space To Total Building Space X Total Land Investment

Total Digital Central Office Building Investment = Ratio Of Digital Central Offices Space To Total Building Space X Total Building Investment

C. Convert total digital central office land and building investments to current cost of the investment using the CCBC Ratios.

The calculations are as follows:

Current Cost Digital Central Office Land Investment = Total Digital Central Office Land Investment X CCBC (Land)

Current Cost Digital Central Office Building Investment = Total Digital Central Office Building Investment X CCBC (Bldg)

D. Calculate land and building investments for the space that is actually used for digital switching and circuit equipment.

The study calculates digital switching and circuit land and building investments adjusting the total digital central office land and building investments calculated in Step C by the assignable unoccupied central office space ratios and the ratios of switch to total building and circuit to total building. The

	A	B	C	D	E
1	Version 1.0 Created 7/12/01, 4:35:46 PM				
2			**Run_Name**		
3	Run Name		1.0 Created 7/12/01, 4:35:46 PM		
4	StudyID		5336		
5			**State**		
6	State		South Dakota		
7	**General Inputs**				
8	**1 Standard Collocation**		Standard		
9	Number of Bays in Standard Configuration		2	Standard_Array	
10	Number of Bays Cable Racking is Spread Over		3		
11	Number of Bays Miscellaneous Items are Spread Over		3		
12	Number of Bays Other Shared Items are Spread Over		3		
13	Number of DS0 Terminations		100		
14	Number of DS1 Terminations		28		
15	Number of DS3 Terminations		1		
16	% of Blocks that are 410 Blocks		0.9		
17	Apply Sales Tax to Contract Labor: 1=Yes, 0=No		1		
18	Shipping Rate		0.13989		
19	**2 Cageless Collocation**		Cageless		
20	Number of Cageless Collocators per office		3	Cageless_Array	
21	% of Jobs that Require Major Aerial Support		0.5		
22	% of Jobs Requiring Any Aerial Support		0.853658537		
23	% of Jobs Requiring Major Cable Racking		0.5		
24	% of Jobs Requiring Both Major Aerial and Major Cable Racking		0.730769231		
25	% of Jobs Requiring some Cable Racking		0.87804878		
26	**3 Caged Collocation**		Caged		
27	Number of Caged Collocators per office		3	Caged_Array	
28	% of Jobs that Require Major Aerial Support		1		
29	% of Jobs Requiring Any Aerial Support		0.853658537		
30	% of Jobs Requiring Major Cable Racking		1		
31	% of Jobs Requiring Both Major Aerial and Major Cable Racking		0.730769231		
32	% of Jobs Requiring some Cable Racking		0.87804878		
33					
34	**Quotation Preparation Fees**		qpf		
35	2.3 Quotation Preparation Fee - Cageless		$ 3,174.25	qpf_array	
36	3.4 Quotation Preparation Fee - Caged		$ 3,451.33		
37	4.3 Quotation Preparation Fee - Virtual		$ 3,174.25		
38					
39	**1.1 Terminations**		Terminations		
40	Number of 410 Blocks		0.9	Blocks_410	
41	Expense per 410 Block		$ 376.00		

	A	B	C	D	E
42	45 Day Labor Expense per 410 Block	$	229.85		
43	90 Day Labor Expense per 410 Block	$	182.89		
44	Number of 89 Blocks		0.1	Blocks_89	
45	Expense per 89 Block	$	85.46		
46	45 Day Labor Expense per 89 Block	$	229.85		
47	90 Day Labor Expense per 89 Block	$	182.85		
48	Number of DS1 Panels		1	DS1_Panels	
49	Expense per DS1 Panel	$	524.25		
50	45 Day Labor Expense per DS1 Panel	$	158.19		
51	90 Day Labor Expense per DS1 Panel	$	125.16		
52	Number of DS3 Connectors		2	DS3_Connectors	
53	Expense per DS3 Connector	$	9.07		
54	45 Day Labor Expense per DS3 Connector	$	9.45		
55	90 Day Labor Expense per DS3 Connector	$	6.38		
56	Number of DS0 Cable Feet		156.05	DS0_Cable	
57	Expense per DS0 Cable Foot	$	1.45		
58	Number of DS0 Cable Terminations		100.00		
59	45 Day Labor Expense per DS0 Cable foot	$	1.45		
60	90 Day Labor Expense per DS0 Cable foot	$	1.13		
61	Number of DS1 Cable Feet		115.47	DS1_Cable	
62	Expense per DS1 Cable Foot	$	1.13		
63	Number of DS1 Cable Terminations		28.00		
64	45 Day Labor Expense per DS1 Cable foot	$	1.66		
65	90 Day Labor Expense per DS1 Cable foot	$	1.27		
66	Number of DS3 Cable Feet		94.77	DS3_Cable	
67	Expense per DS3 Cable Foot	$	0.89		
68	Number of DS3 Cable Terminations		1.00		
69	45 Day Labor Expense per DS3 Cable foot	$	0.84		
70	90 Day Labor Expense per DS3 Cable foot	$	0.63		
71					
72	**1.2 Entrance Enclosure**				
73	**Entrance Enclosure-General**		Enclosure		
74	Underground Fiber Cable Per Ft		$1.04	Enclosure_Array	
75	Utility Hole		$6,487.54		
76	Cut & Replace Road Covering - Utility Hole		$1,977.60		
77	Cut & Replace Concrete Per Trench Ft. - Conduit		$12.36		
78	Backfill Utility Hole		$816.60		
79	Backfill Conduit Trench Per Trench Ft.		$5.21		
80	Conduit Per Ft.		$21.63		
81	Pumping Utility Hole		$499.96		
82	Pulling Fiber into Conduit Per Ft.		$1.36		
83	Innerduct Per Ft.		$2.66		
84	Fiber Cable Per Ft		$1.16		
85	Cable Rack Per Ft		$181.45		
86	Fiber Cable Splicing - Per Setup		$366.99		
87	Fiber Cable Splicing - Per Fiber Spliced		$16.32		
88	Fiber Distribution Panel		$1,394.72		
89	Single Fiber Jumper		$125.00		
90	Attenuator Per Fiber		$0.00		
91	Core Drill		$112.00		
92	Placing Fiber Cable on Cable Racking Per Ft		$2.39		
93	Distance from Manhole '0' to Cable Vault		108		
94	Distance between Manhole 1 and Manhole '0'		302		
95	Weighting of use of POI		10%		
96	Weighting of use of Existing Manhole = (1-%POI)		90%		
97	**Standard Entrance Enclosure**		Shared_Entrance		
98	Distance from POI to Qwest Manhole '0' (feet)		50	ndard_Entrance_Array	
99	Fibers required per Collocator		18		
100	Collocators per Utility Hole/Conduit/CO		3		

	A	B	C	D	E
101	Core Drills per manhole		2		
102	Number of Fiber Splice Setup		2		
103	Number of fibers spliced per CLEC		18		
104	Distance for New Cable Racking		20		
105	Distance Shared Cable Racking		130		
106	**Cross Connect Entrance Enclosure**		Xconnect		
107	Distance from POI to Qwest Manhole '0' (feet)		50	Xconnect_Array	
108	Fibers required per Collocator		18		
109	Collocators per Utility Hole/Conduit/CO		3		
110	Core Drills per central office		2		
111	Number of Fiber Splice Setup		2		
112	Number of fibers spliced per CLEC		18		
113	Number of Fiber Distribution Panel		2		
114	Distance of New Cable Racking		20		
115	Distance of Shared Cable Racking		130		
116	**Express Entrance Enclosure**		Express		
117	Distance from POI to Manhole '0' (feet)		50	Express_Array	
118	Core Drills per central office		2		
119	Collocators per Utility Hole/Conduit/CO		3		
120	Distance from POI to Cable Vault (feet)		150		
121	Distance for New Cable Racking		20		
122	Distance for Existing Cable Racking		130		
123					
124	**2 Overall Aerial Support - Cageless**		Aerial_Major	Aerial_Minor	
125	Aux Frame Channel - Number of 10 foot channels		60	7	Aux
126	Aux Frame Channel - Number of 20 foot channels		7	1	
127	Aux Frame Channel - Expense per 10 foot channels		$18.00	$12.94	
128	Aux Frame Channel - Expense per 20 foot channel		$50.10	$38.05	
129	Aux Frame Channel - 45 Day Labor Expense per foot	$	16.75	$ 16.75	
130	Aux Frame Channel - 90 Day Labor Expense per foot	$	13.60	$ 13.60	
131	U Channel - Number of U Channels		1	0	U_Channel
132	U Channel - Expense per U Channel		$123.25	$0.00	
133	U Channel - 45 Day Labor Expense per foot	$	23.25	$ 23.25	
134	U Channel - 90 Day Labor Expense per foot	$	20.40	$ 20.40	
135	Number of Aux Frame Fittings		28.78947368	3.5625	Aerial_Other
136	Expense per Aux Frame Fitting		$20.27	$19.23	
137	Number of Aux Frames Support		68.47368421	18.4375	
138	Expense per Aux Frame Support		$7.00	$5.12	
139	Number of Aux Frame Nuts and Bolts		140.4736842	8.125	
140	Expense of Aux Frame Nuts and Bolts		$0.39	$0.29	
141	Number of Cable Racks Support		0.210526316	0	
142	Expense per Cable Rack Support		$24.19	$0.00	
143	Amount of Insulation		5.473684211	0.875	
144	Expense per Insulation		$2.63	$2.42	
145	Number of Miscellaneous Items		17.47368421	0.125	
146	Expense per miscellaneous item		$11.24	$6.58	
147	Number of Nuts and Bolts - cable racking		0.421052632	0.25	
148	Expense of Nuts and Bolts - cable racking		$0.52	$0.52	
149	Number of General Support items		1.578947368	0	
150	Expense of General Support items		$1.95	$0.00	
151	Number of U-Channel - Other Items		1.473684211	7.5	
152	Expense of U-Channel - Other Items		$7.25	$2.18	
153	Number of U-Channel Fittings		0	0.25	
154	Expense of U-Channel Fitting		$0.00	$2.78	
155					
156	**2 Cable Racking - Cageless**		Rack_Major	Rack_Minor	
157	Number of Channels		9.5	1.3	Cable_Tracking
158	Expense per Channel	$	74.52	$ 69.17	

	A	B	C	D	E
159	45 Day Labor Expense per Channel	$	24.06	$ 24.06	
160	90 Day Labor Expense per Channel	$	21.93	$ 21.93	
161	Number of Ladders		1.5	0.1	
162	Expense per Ladder	$	30.70	$ 23.76	
163	45 Day Labor Expense per Ladder	$	24.06	$ 24.06	
164	90 Day Labor Expense per Ladder	$	21.93	$ 21.93	
165	Number of Horns		29.3	2.4	
166	Expense per Horn	$	13.93	$ 15.70	
167	45 Day Labor Expense per Horn	$	8.43	$ 8.43	
168	90 Day Labor Expense per Horn	$	7.00	$ 7.00	
169	Amount of Pan		7.2	1.4	
170	Expense for Pan	$	26.31	$ 28.77	
171	45 Day Labor Expense per Pan	$	16.14	$ 16.14	
172	90 Day Labor Expense per Pan	$	13.56	$ 13.56	
173	Number of Systems Ladders		10.6	1	
174	Expense per Systems Ladder	$	4.91	$ 2.65	
175	Number of Brackets		17.7	10.8	
176	Expense per Bracket	$	12.05	$ 13.60	
177	Number of Fittings		51.1	35	
178	Expense per Fitting	$	8.04	$ 6.84	
179	Number of Insulators		3.7	1.6	
180	Expense per Insulator	$	1.04	$ 0.64	
181	Number of Cable Racking Kits		9.1	3.8	
182	Expense per Cable Racking Kit	$	60.15	$ 49.39	
183	Number of Miscellaneous Items		142.7	40	
184	Expense per Miscellaneous Item	$	0.10	$ 0.02	
185	Number of Support Items		33.4	8.2	
186	Expense per Support Item	$	7.55	$ 6.14	
187	Number of Nuts and Bolts		16.8	20.1	
188	Expense per set of Nuts and Bolts	$	0.47	$ 0.49	
189					
190	**2 Bay Support - Cageless**		Bay		
191	Number of Bays		7.5	Bay_Array	
192	Expense per Bay	$	279.71		
193	45 Day Labor Expense per 1st Bay	$	497.82		
194	45 Day Labor Expense add'l Bay	$	393.61		
195	90 Day Labor Expense per Bay	$	438.27		
196	90 Day Labor Expense add'l Bay	$	332.62		
197	Number of AC Outlets		2.25		
198	Expense per AC Outlet	$	94.05		
199	45 Day Labor Expense per Outlet	$	126.93		
200	90 Day Labor Expense per Outlet	$	99.09		
201	Number of End Guards		3.5		
202	Expense per End Guard	$	379.46		
203	45 Day Labor Expense per End Guard	$	84.76		
204	90 Day Labor Expense per End Guard	$	58.14		
205	Number of Anchor Bolts		16.5		
206	Expense per Anchor Bolt Set	$	27.15		
207	Number of Filler Panels		2.875		
208	Expense per Filler Panel	$	220.09		
209	Number of Guard Rails		5		
210	Expense per Guard Rail	$	66.56		
211	Number of Mountings		28.25		
212	Expense per Mounting	$	89.70		
213	Number of Miscellaneous Items		12.75		
214	Expense per Miscellaneous Item	$	0.47		
215					
216	**2 Lighting**		Light_Cageless		
217	Number of Fixtures		2.56	Lighting	
218	Expense per Fixture	$	111.70		

	A	B	C	D	E
219	45 Day Labor Expense per Fixture	$	213.59		
220	90 Day Labor Expense per Fixture	$	202.12		
221	Number of Lights		1.71		
222	Expense per Light	$	103.96		
223	45 Day Labor Expense per Light	$	213.59		
224	90 Day Labor Expense per Light	$	202.12		
225	Number of Cables		13.66		
226	Expense per Cable	$	0.37		
227	45 Day Labor Expense per 4 Cables	$	4.82		
228	90 Day Labor Expense per 4 Cables	$	3.31		
229	Number of Conduit Supports		0.07		
230	Expense per Conduit Support	$	165.46		
231	45 Day Labor Expense per foot Conduit Support	$	19.07		
232	90 Day Labor Expense per foot Conduit Support	$	17.77		
233	Number of Wires		17.07		
234	Expense per Wire	$	0.25		
235	45 Day Labor Expense per Wire	$	3.65		
236	90 Day Labor Expense per Wire	$	2.77		
237	Number of Conduit Supports - Other		12.00		
238	Expense per Conduit Support - Other	$	0.11		
239	Number of Outlet Raceways		2.27		
240	Expense per Outlet Raceway	$	44.11		
241	Number of Supports		8.15		
242	Expense per Support	$	8.42		
243	Number of Switches		1.20		
244	Expense per Switch	$	97.81		
245	Number of Fittings		8.73		
246	Expense per Fitting	$	4.74		
247	Number of Fitting Supports		0.73		
248	Expense per Fitting Supports	$	13.67		
249	Number of Miscellaneous Items		5.22		
250	Expense per Miscellaneous Item	$	0.27		
251					
252	**2.1 & 3.1 Cable Hole**	Cable_Hole			
253	Number of Fire Stop		0.83	Cable_Hole_Array	
254	Expense per Fire Stop	$	1.36		
255	45 Day Labor Expense per Fire Stop	$	271.74		
256	90 Day Labor Expense per Fire Stop	$	253.32		
257	Number of Bags		0.24		
258	Expense per Bag	$	29.34		
259	Number of Labels		1.27		
260	Expense per Label	$	0.22		
261	Amount of Putty		1.73		
262	Expense of Putty	$	27.02		
263	Number of Sheets		0.37		
264	Expense per Sheet	$	69.55		
265	Amount of Tape		0.07		
266	Expense of Tape	$	188.83		
267	Number of miscellaneous items		0.44		
268	Expense per miscellaneous item	$	2.64		
269					
270	**2.1 Cageless Miscellaneous Inputs**	Misc_Inputs			
271	Number of Ducts		0.20	Misc_Inputs_Array	
272	Expense per Duct	$	3.06		
273	45 Day Labor Expense per Duct	$	22.45		
274	90 Day Labor Expense per Duct	$	18.89		
275	Number of Misc Materials		0.95		
276	Expense for Misc Materials		803.1787179		
277	Number of Bolt Kits		0.02		
278	Expense per Bolt Kit	$	7.53		

	A	B	C	D	E
279	Number of Eqpt Nuts and Bolts		0.17		
280	Expense for Eqpt Nuts and Bolts	$	5.71		
281	Number of General Nuts and Bolts		17.12		
282	Expense for General Nuts and Bolts	$	0.40		
283	Amount of Paint		1.29		
284	Expense for Paint	$	8.66		
285	Number of Tags		2.02		
286	Expense per Tag	$	2.86		
287	Amount of Tape		0.34		
288	Expense for Tape	$	9.92		
289	Number of Miscellaneous Items		5.49		
290	Expense per Miscellaneous Item	$	115.25		
291					
292	**2 Grounding - Cageless**	Grounding_Cageless			
293	1/0 Cable Footage		0.975609756	Grounding_Cageless_Array	
294	Expense per foot of 1/0 Cable	$	3.12		
295	45 Day Labor Expense per foot of 1/0 Cable	$	3.42		
296	90 Day Labor Expense per foot of 1/0 Cable	$	2.42		
297	#2 Cable Footage		34.87804878		
298	Expense per foot of #2 Cable	$	1.56		
299	45 Day Labor Expense per foot of #2 Cable	$	1.21		
300	90 Day Labor Expense per foot of #2 Cable	$	0.83		
301	4/0 Cable Footage		33.65853659		
302	Expense per foot of 4/0 Cable	$	2.11		
303	45 Day Labor Expense per foot of 4/0 Cable	$	6.35		
304	90 Day Labor Expense per foot of 4/0 Cable	$	4.54		
305	#6 Cable Footage		0.609756098		
306	Expense per foot of #6 Cable	$	0.67		
307	45 Day Labor Expense per foot of #6 Cable	$	1.21		
308	90 Day Labor Expense per foot of #6 Cable	$	0.83		
309	750 Cable Footage		10.85365854		
310	Expense per foot of 750 Cable	$	8.80		
311	45 Day Labor Expense per foot of 750 Cable	$	27.42		
312	90 Day Labor Expense per foot of 750 Cable	$	18.90		
313	Number of Ground Bars		0.07		
314	Expense per Ground Bar	$	83.28		
315	45 Day Labor Expense per Ground Bar	$	299.52		
316	90 Day Labor Expense per Ground Bar	$	247.95		
317	Amount of Alternative Racking		1.073170732		
318	Expense of Alternative Racking	$	6.87		
319					
320	**3 Cable Racking - Caged**	Rack_Major_Caged		Rack_Minor_Caged	
321	Number of Channels		8	2.5	Rack_Caged_Array
322	Expense per Channel	$	74.52	$ 69.17	
323	45 Day Labor Expense per Channel	$	24.06	$ 24.06	
324	90 Day Labor Expense per Channel	$	21.93	$ 21.93	
325	Number of Horns		24.6	4.6	
326	Expense per Horn	$	13.93	$ 15.70	
327	45 Day Labor Expense per Horn	$	8.43	$ 8.43	
328	90 Day Labor Expense per Horn	$	7.00	$ 7.00	
329	Amount of Pan		6.0	2.7	
330	Expense for Pan	$	26.31	$ 28.77	
331	45 Day Labor Expense per Pan	$	16.14	$ 16.14	
332	90 Day Labor Expense per Pan	$	13.56	$ 13.56	
333	Number of Systems Ladders		8.9	1.2	
334	Expense per Systems Ladder	$	4.91	$ 2.65	
335	Number of Brackets		14.9	20.8	
336	Expense per Bracket	$	12.05	$ 13.60	
337	Number of Fittings		43.0	67.3	
338	Expense per Fitting	$	8.04	$ 6.84	

	A	B	C	D	E
339	Number of Insulators		3.1	3.1	
340	Expense per Insulator	$	1.04	$ 0.64	
341	Number of Cable Racking Kits		7.7	7.3	
342	Expense per Cable Racking Kit	$	60.15	$ 49.39	
343	Number of Miscellaneous Items		120.2	76.9	
344	Expense per Miscellaneous Item	$	0.10	$ 0.02	
345	Number of Support Items		28.1	15.8	
346	Expense per Support Item	$	7.55	$ 6.14	
347	Number of Nuts and Bolts		14.2	38.7	
348	Expense per set of Nuts and Bolts	$	0.47	$ 0.49	
349					
350	**3 Overall Aerial Support - Caged**	Aerial_Caged_Major		Aerial_Caged_Minor	
351	Aux Frame Channel - Number of 10 foot channels		32	5	Aerial_Caged_Array
352	Aux Frame Channel - Number of 20 foot channels		16	3	
353	Aux Frame Channel - Expense per 10 foot channels	$	18.00	$ 12.94	
354	Aux Frame Channel - Expense per 20 foot channel	$	50.10	$ 38.05	
355	Aux Frame Channel - 45 Day Labor Expense per foot	$	16.75	$ 16.75	
356	Aux Frame Channel - 90 Day Labor Expense per foot	$	13.60	$ 13.60	
357	U Channel - Number of U Channels		1	0	
358	U Channel - Expense per U Channel		$123.25	$0.00	
359	U Channel - 45 Day Labor Expense per foot	$	23.25	$ 23.25	
360	U Channel - 90 Day Labor Expense per foot	$	20.40	$ 20.40	
361	Number of Aux Frame Fittings		20.64	3.59	
362	Expense per Aux Frame Fitting		$20.27	$19.23	
363	Number of Aux Frames Support		49.09	18.59	
364	Expense per Aux Frame Support	$	7.00	$ 5.12	
365	Number of Aux Frame Nuts and Bolts		100.72	8.19	
366	Expense of Aux Frame Nuts and Bolts	$	0.39	$ 0.29	
367	Number of Cable Racks Support		0.15	0.00	
368	Expense per Cable Rack Support	$	24.19	$ -	
369	Amount of Insulation		3.92	0.88	
370	Expense per Insulation	$	2.63	$ 2.42	
371	Number of Miscellaneous Items		12.53	0.13	
372	Expense per miscellaneous item	$	11.24	$ 6.58	
373	Number of Nuts and Bolts - cable racking		0.30	0.25	
374	Expense of Nuts and Bolts - cable racking	$	0.52	$ 0.52	
375	Number of General Support items		1.13	0.00	
376	Expense of General Support items		$1.95	$0.00	
377	Number of U-Channel - Other Items		1.06	7.56	
378	Expense of U-Channel - Other Items	$	7.25	$ 2.18	
379	Number of U-Channel Fittings		0.00	0.25	
380	Expense of U-Channel Fitting		$0.00	$2.78	
381					
382	**3.1 Caged Expense Inputs**	Caged_Inputs			
383	Fence - 100 sf		$3,970.00	Caged_Inputs_Array	
384	Fence - 200 sf		$4,950.00		
385	Fence - 300 sf		$5,560.00		
386	Fence - 400 sf		$6,140.00		
387	HVAC - 100 sf		$713.00		
388	HVAC - 200 sf		$854.00		
389	HVAC - 300 sf		$1,071.00		
390	HVAC - 400 sf		$1,596.00		
391	Electrical Distrtribution - 100 sf		$4,341.00		
392	Electrical Distrtribution - 200 sf		$4,379.00		
393	Electrical Distrtribution - 300 sf		$4,398.00		
394	Electrical Distrtribution - 400 sf		$4,416.00		
395	Lighting - 100 sf		$679.00		
396	Lighting - 200 sf		$932.00		
397	Lighting - 300 sf		$1,184.00		
398	Lighting - 400 sf		$1,437.00		

South Dakota Public Utilities Commission
Docket No. TC 01_____
Qwest Corporation

Attachment 3

Study No. 5436
Line Sharing Collocation



Collocation: Line Sharing

SOUTH DAKOTA
JULY 2001

Study ID: 5436

QWEST CORPORATION
Policy and Law

Table of Contents

	Page
I. Executive Summary	3
A. Purpose Scope, and Application	3
B. Description of Service	3
C. Study Methodology	4
D. Description of Long Run Incremental Costs	4
E. Study Assumptions	5
II. Rate Elements	6
III. Work Papers	7
Study Summary	7
Inputs	8
Configurations	12
Cost Summary	15
Engineering	16
Cost per Splitter	17
Splitter Bay - Direct to DLEC	18
Splitter Bay - Data to 410	19
Splitter Bay - Vo & VoDa	20
IDF Splitter Direct to DLEC	21
IDF Splitter to 410	22
MDF Splitter Direct to DLEC	23
MDF Splitter to 410	24
WCP Maintenance	25
WCP Non-Recurring	27
Bay Constuction	29
Lighting	30
Line Sharing Actuals	32

Executive Summary

A. PURPOSE, SCOPE, AND APPLICATION

The purpose of this study is to determine the expenses and recurring costs that will be incurred by Qwest to provide Collocation: Line Sharing for customers.

This study develops Qwest average costs. Costs are based on a per unit basis depending upon which element is being requested.

The costs developed in this study can be used for developing pricing for customer - requested items.

B. DESCRIPTION OF SERVICE

Line Sharing allows the Co-Provider's the ability to share the local loop by permitting them access to the customer through ADSL technology. Line Sharing will permit the use of any ADSL technology that falls within the parameters of the T1.413 standard.

The Co-Provider's have the option of either purchasing approved central office POTS splitters from a list of approved products or to have Qwest purchase the splitter on the Co-Provider's behalf.

Qwest will install the splitter in one of three possible locations within the central office:
1. on a Splitter Bay as close to the Intermediate Distribution Frame (IDF) or the Co-Provider's DS0 termination points as possible;
2. on the IDF; or

Cost Elements

- **Engineering** - Engineering hours required for each job request. *No material or placement costs are included in this rate.*
- **Splitter Shelf Charge** - Includes the apportioned bay costs required to house the splitter. In addition, the cost to mount the splitter is included. *The cost of splitter and cards are charged separately.*
- **Splitter in the Common Area - Data to 410 Block** - Includes the cable, placement and connector charges for 96 DS0 cable equivalents. In addition, the tying of cables to the blocks, stenciling, and test and tone out are included. This configuration assumes the CLEC has connections between the MDF and IDF and the CLEC has purchased or supplied the splitter and cards. This configuration also includes the required Voice and Voice/Data charges that include the 89-100 block, mounting the block, the tying of cables to the block, stenciling, and test and tone out.
- **Splitter in the Common Area - Data Direct to CLEC** - Includes the cable, placement and connector charges for 96 DS0 cable equivalents. This configuration assumes the CLEC has connections between the MDF and IDF, terminations to the IDF, and the CLEC has purchased or supplied the splitter and cards. This configuration also includes the required Voice and Voice/Data charges that include the 89-100 block, mounting the block, the tying of cables to the block, stenciling, and test and tone out.
- **Splitter on the MDF - Data Direct to CLEC** - Includes the cable and placement charges for 96 DS0 cable equivalents. In addition, mounting the splitter blocks, the tying of cables to the blocks, stenciling, and test and tone out are included. This configuration assumes the CLEC has purchased or supplied the splitter and cards.
- **Splitter on the IDF - Data to 410 Block** - Includes the cable, placement and connector charges for 96 DS0 cable equivalents. In addition, mounting the splitter blocks, the tying of cables to the blocks, stenciling, and test and tone out are included. This configuration assumes the CLEC has connections between the MDF and IDF and the CLEC has purchased or supplied the splitter and cards.
- **Splitter on the IDF - Data Direct to CLEC** - Includes the cable and placement charges for 96 DS0 cable equivalents. In addition, mounting the splitter blocks, the tying of cables to the blocks, stenciling, and test and tone out are included. This configuration assumes the CLEC has connections between the MDF and IDF, terminations to the IDF, and the CLEC has purchased or supplied the splitter and cards.

IDF, terminations to the IDF, and the CLEC has purchased or supplied the splitter and cards.

C. STUDY METHODOLOGY

The costs were developed from material, engineering and installation labor costs provided by Subject Matter Experts (SME's) in Central Office Engineering and Outside Plant Engineering.

Monthly maintenance costs were developed by taking the element - specific expense and applying the account - code specific maintenance.

The investments/expenses from the above items were then entered into the WCP (Wholesale Cost Program) model, developed and used within Qwest.

D. DESCRIPTION OF LONG RUN INCREMENTAL COSTS

Long Run Incremental Cost (LRIC) is the method Qwest uses to estimate product and service costs. It provides a measurement of costs over a period of time long enough to fully adjust to changes of output (including changes in the size of facilities, levels of investment, etc.) in order to optimally accommodate this change. This methodology is forward looking in nature (i.e. LRIC uses the latest technology costs or replacement costs.) Since LRIC is forward looking, it does *not* measure historic investment decisions of the corporation.

The Qwest LRIC format disaggregates the cost results on a unitized basis into the components shown below:

Total Service Long Run Incremental Cost (TSLRIC) --Total Service Long Run Incremental Cost is the forward looking cost avoided (or added) by discontinuing (or offering) an entire service or group of services in the most efficient manner, holding constant the production of all other services produced by the firm. This cost is often referred to in economic terms as direct cost.

Shared Cost (SC)-- The cost associated with the provision of multiple services (service family). This cost is not volume sensitive and is eliminated only if the entire service family is discontinued.

Total Service Long Run Incremental Costs plus Shared Costs (TSLRIC+SC)--The Total Service Long Run Incremental Costs for a service plus the Shared Costs of a family of services.

Total Element Long Run Incremental Cost (TELRIC) -- Total Element Long Run Incremental Cost, as defined by the Federal Communications Commission, is the sum of the forward looking direct cost incurred in the production of a network element (as opposed to an entire service), attributed costs considered as shared cost under TSLRIC terminology and selected administrative costs considered as common under TSLRIC terminology.

Common Cost (CC)

For **TSLRIC** purposes, common costs are the current cost incurred for the benefit of the enterprise as a whole. This cost does not vary with the provision of a service or a service family. These costs are sometimes referred to as *general overhead costs*. The Common Cost added to the TSLRIC + SC produces a **Fully Allocated Cost (FAC)** as required by Commission rules.

For **TELRIC** purposes, common costs are the current cost incurred for the benefit of the enterprise as a whole, after those cost that vary with the provisioning of individual network elements are removed. The costs removed from common for TELRIC purposes are included in the TELRIC itself. **Total Long Run Incremental Cost plus TELRIC common costs (TELRIC + CC)** form the basis for pricing Interconnection network elements. TELRIC + CC is the equivalent of fully allocated cost as the term is applied to network elements.

Typically, the cost identified by these cost categories include capital costs for depreciation, return, and income taxes. TSLRIC also includes ongoing operating costs for: administration expense, product management expense, pre sales expense, and business fees.

E. Study Assumptions

1. All cost are forward looking.
2. See "Inputs" worksheet.

Collocation: Line Sharing

Rate Elements

State: SOUTH DAKOTA

Line Sharing	RC	NRC	Rate Mapping RC	Rate Mapping NRC
Splitter Shelf Charge	$ 4.70	$ 522.56	Cost Summary'!G10	Cost Summary'!F10
Splitter TIE Cable Connections				
Splitter in the Common Area - Data to 410 Block	$ 7.52	$ 3,084.93	Cost Summary'!G17+('Cost Summary'!D18*'Cost Summary'!G18)	Cost Summary'!F17+('Cost Summary'!D18*'Cost Summary'!F18)
Splitter in the Common Area - Data Direct to CLEC	$ 7.89	$ 3,237.66	Cost Summary'!G11+('Cost Summary'!D12*'Cost Summary'!G12)	Cost Summary'!F11+('Cost Summary'!D12*'Cost Summary'!F12)
Splitter on the MDF - Data to 410 Block	$ 2.46	$ 1,010.02	Cost Summary'!G35	Cost Summary'!F35
Splitter on the MDF - Data Direct to CLEC	$ 5.29	$ 2,169.08	Cost Summary'!G31	Cost Summary'!F31
Splitter on the IDF - Data to 410 Block	$ 2.39	$ 981.87	Cost Summary'!G27	Cost Summary'!F27
Splitter on the IDF - Data Direct to CLEC	$ 4.48	$ 1,838.37	Cost Summary'!G23	Cost Summary'!F23
Engineering		$ 1,238.09		Cost Summary'!F6

Collocation: Line Sharing

Study Name	*Collocation: Line Sharing*	
Study Requester		
Type of Study	*TELRIC*	
Study ID	*5436*	
Cost Factor Group	*Interconnection*	
Study Applications		
Completion Date	*July 11, 2001*	
Cost Analyst		
Study Review	**Reviewer**	**Date**
		July 11, 2001
Cost Models Used	**Model**	**Version and/or Release Date**
	Wholesale Cost Program	*01/08/01 (Version 2.07)*
	Cost Factor Databases	*01/02/01 (Vintage: 00SD02E)*
	Cost Factors Model (TELRIC)	
Cost Factors Used	**Factor**	**Effective Date**
	Capital Recovery	*01/01*
	Maintenance	*01/01*
	Ad Valorem	*01/01*
	Power	*01/01*
	Sales Tax	*01/01*
	Interest During Construction	*01/01*
	COE Land & Bldg	*01/01*
	Directly Assigned Factors	*01/01*
	Directly Attributable Factors	*01/01*
	Common	*01/01*
	Cost Of Money	*10.14%*
Inflation		
Major Cost Drivers		

Collocation: Line Sharing

Study Information	Value
Filing Month	JULY
Filing Year	2001
State	SD
State Full Name	SOUTH DAKOTA
Run Date	7/11/01
Factor Vintage	*00SD02E*
Study ID	5436

Model Assumptions	Value	Source
General		
Shipping Rate	13.99%	
Tax on Labor	*Yes*	
Work Completion Interval	90	
USWI Labor Percent	*50%*	
Specific		
Engineering		
Engineering Hours Override	**20**	Network
Engineering Rate	$ 46.18	Engineering
Other		
Projected Bay-Mounted Splitter per Office	8	Network
Number of feet to Splitter - Splitter on Splitter Bay	200	Network
Number of feet to Splitter - Splitter on MDF	200	Network
Number of feet to Splitter - Splitter on IDF	156	Network
Number of feet to Splitter - 410 Block	30	Network
Number of feet to Splitter - Vertical Drop	20	Network
Mounting Splitter Labor	$ 113.75	Network
Expense Per Foot of 25-pair Cable	$ 0.35	
Connector for Cable	$ 6.50	
Square Feet per Bay	9	
New Cable Racking Cable Utilization	3	
New Cable Racking Fill	100%	
Existing Cable Racking Fill	70%	SME

Collocation Model Inputs	Value	Source
Aerial Support		
Grand Total Overall Aerial Support-90 day - Major (A)	*$ 9,169.90*	E. 2.1 & 3.1 Aerial Support
Grand Total Overall Aerial Support-90 day - Minor (B)	*$ 928.42*	E. 2.1 & 3.1 Aerial Support
Number of Channels - Major (C)	*9.5*	D. Defaults and Overrides - Number of Channels
Number of Channels - Minor (D)	*1.3*	D. Defaults and Overrides - Number of Channels
% of Offices that Require Major Aerial Support (E)	*50%*	E. 2.1 & 3.1 Aerial Support
Overall Aerial Support for 10' of Cable Rack	*$ 839.71*	=((A/C)+(B/D))*E
Cable Racking		
Grand Total Cable Racking -90 day - Major (A)	*$ 7,206.01*	E. 2.1 & 3.1 Cable Racking
Grand Total Cable Racking -90 day - Minor (B)	*$ 1,508.67*	E. 2.1 & 3.1 Cable Racking
Number of 10' Cable Racking Sections - Major (C)	*9.5*	D. Defaults and Overrides - Number of Channels
Number of 10' Cable Racking Sections - Minor (D)	*1.3*	D. Defaults and Overrides - Number of Channels
% of Offices that Require Major Aerial Support (E)	*50%*	E. 2.1 & 3.1 Cable Racking
Weighted 10' Section of Cable Racking	*$ 959.52*	=((A/C)+(B/D))*E
ITP		

DS0 Capacity Per Rack		219	=E. 1.7 ITP
DS1 Capacity Per Rack		322	=E. 1.7 ITP
DS3 Capacity Per Rack		833	=E. 1.7 ITP
Defaults and Overrides			
Expense per DS0 Cable Foot	$	1.45	=D. Defaults and Overrides
Expense per DS1 Cable Foot	$	1.13	=D. Defaults and Overrides
Expense per DS3 Cable Foot	$	0.89	=D. Defaults and Overrides
Expense per Bay	$	279.71	=D. Defaults and Overrides
90 Day Labor Expense per Bay	$	438.27	=D. Defaults and Overrides
90 Day Labor Expense add'l Bay	$	332.62	=D. Defaults and Overrides
Expense per Fixture	$	111.70	=D. Defaults and Overrides
90 Day Labor Expense per Fixture	$	202.12	=D. Defaults and Overrides
Expense per Light	$	103.96	=D. Defaults and Overrides
90 Day Labor expense per Light	$	202.12	=D. Defaults and Overrides
expense per Cable	$	0.37	=D. Defaults and Overrides
90 Day Labor expense per Cable	$	3.31	=D. Defaults and Overrides
expense per Wire	$	0.25	=D. Defaults and Overrides
90 Day Labor Expense per Wire	$	2.77	=D. Defaults and Overrides
Number of Fixtures		2.56	=D. Defaults and Overrides
Number of Conduit Supports per fixture	$	12.00	=D. Defaults and Overrides
expense per Conduit Support	$	0.11	=D. Defaults and Overrides
Number of Outlet Raceways per fixture	$	2.27	=D. Defaults and Overrides
expense per Outlet Raceway	$	44.11	=D. Defaults and Overrides
Number of Supports per fixture	$	8.15	=D. Defaults and Overrides
expense per Support	$	8.42	=D. Defaults and Overrides
Number of Switches per fixture	$	1.20	=D. Defaults and Overrides
Expense per Switch	$	97.81	=D. Defaults and Overrides
Number of Fittings per fixture	$	8.73	=D. Defaults and Overrides
Expense per Fitting	$	4.74	=D. Defaults and Overrides
Number of Fitting Supports per fixture	$	0.73	=D. Defaults and Overrides
Expense per Fitting Supports	$	13.67	=D. Defaults and Overrides
Number of Miscellaneous Items per fixture	$	5.22	=D. Defaults and Overrides
Expense per Miscellaneous Item	$	0.27	=D. Defaults and Overrides
Expense per 89 Block	$	85.46	=D. Defaults and Overrides
Cable Hole			
Total 90 Day Labor Expense	$	210.07	='E. 2.1 Cable Hole'!$B$14
Total Material Expense	$	95.77	='E. 2.1 Cable Hole', Sum of "Other"& Fire Hole Material Expense
Rent Summary			
Rent per Square Foot	$	3.05	Detailed Summary of Results
Ground Wire			
Total 4/0 AWG cost per ft.	$	15.88	Grounding - Cage
Power Adjustment			
Power Maint Expense Adj		0.003256	G. Investment Factors

Labor Rate Inputs		**Value**	**Source**
Placement, First Four (4, 25-pair Cables)	$	2.52	='Labor Rates'!$R$16
Tying Cables to Block	$	50.45	='Labor Rates'!$R$26

Block Stenciling	$	59.47	='Labor Rates'!$R$68
Test and Tone Out for First Three Shelves	$	169.12	='Labor Rates'!$R$65
Connect Bulk Cables (76-100)	$	161.61	='Labor Rates'!$R$29
Placement, Each Addl (4, 25-pair Cables)	$	1.97	='Labor Rates'!$R$17
MDF Block Installation	$	21.28	='Labor Rates'!$R$63

Factors	Value
WCP Version	2.07
Cost of Money	10.14%
Capital Recovery	01/01
Maintenance	01/01
Ad Valorem	01/01
Power	01/01
Sales Tax	01/01
Interest During Construction	01/01
COE Land & Bldg	01/01
Directly Assigned Factors	01/01
Directly Attributable Factors	01/01
Common	01/01
Vintage	00SD02E
Investment Loadings	
Power	0.069700
Sales Tax	0.056400
Interest During Construction	0.006100
COE Land And Building Investment	
Building	0.053600
Land	0.001400
Investment Based Monthly Direct Costs	
Depreciation	0.109717
Cost Of Money	0.045455
Income Tax Expense	0.017189
Maintenance	0.032498
Ad Valorem Tax	0.008613
COE Land And Building Cost	
COE Building	0.159969
COE Land	0.163967
Directly Assigned	
Product Management Expense	0.025565
Sales Expense	0.009225
Product Advertising Expense	0.000000
Business Fees (Other Operating Taxes)	0.002025
Directly Attributed	
Network Operations	0.040880
Network Support Assets	0.015364
General Support Assets	0.069508
General Purpose Computers	0.034714
Uncollectible	0.000401
Accounting & Finance Expense	0.008839
Human Resources Expense	0.008145
Information Management Expense	0.057009

Collocation: Line Sharing

Intangibles	*0.002091*
State Prescribed Directly Attributed	*0.000000*
Common	
Executive Expense	*0.007805*
Planning Expense	*0.000580*
External Relations Expense	*0.013029*
Legal Expense	*0.006148*
Other Procurement Expense	*0.002359*
Research & Development Expense	*0.000036*
Other General and Admin Expense	*0.015212*
State Prescribed Common	*0.000000*

Collocation: Line Sharing

Option 1A - Splitter on the Splitter Bay: Data Connections Direct to DLEC

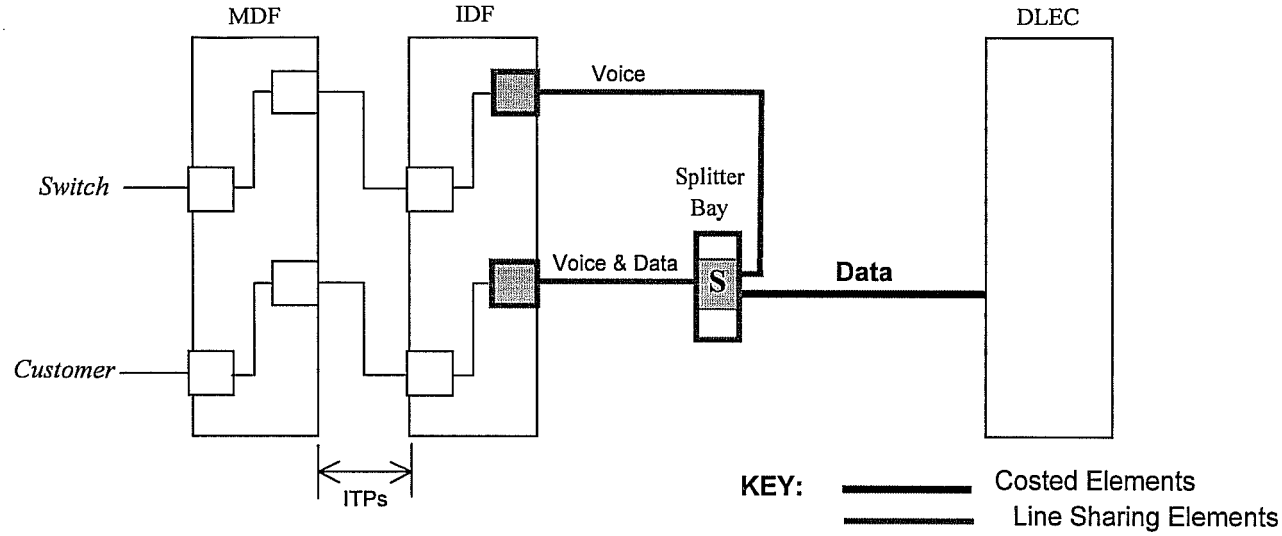

Option 1B - Splitter on the Splitter Bay: Data Connections to the 410 Block

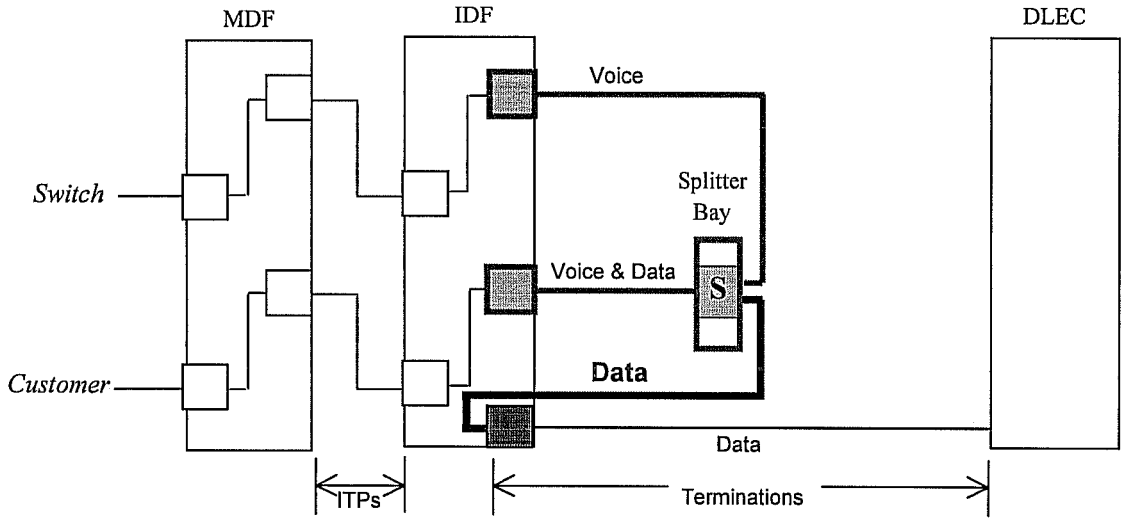

Option 1A & 1B - Splitter on the Splitter Bay: Per Each Voice and Voice/Data Connection

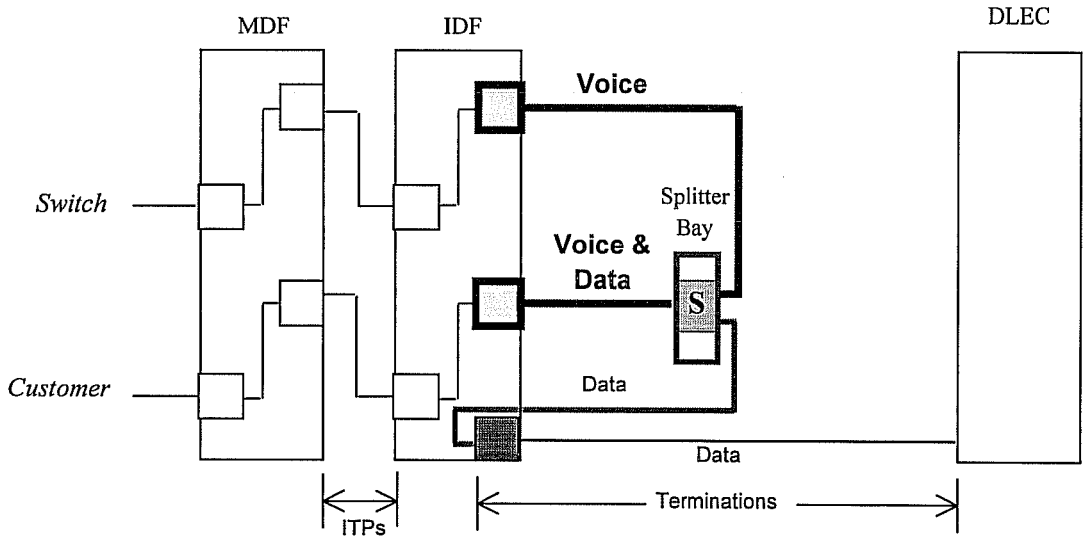

Collocation: Line Sharing

Option 2A - Splitter on the IDF: Data Connections Direct to DLEC

Option 3

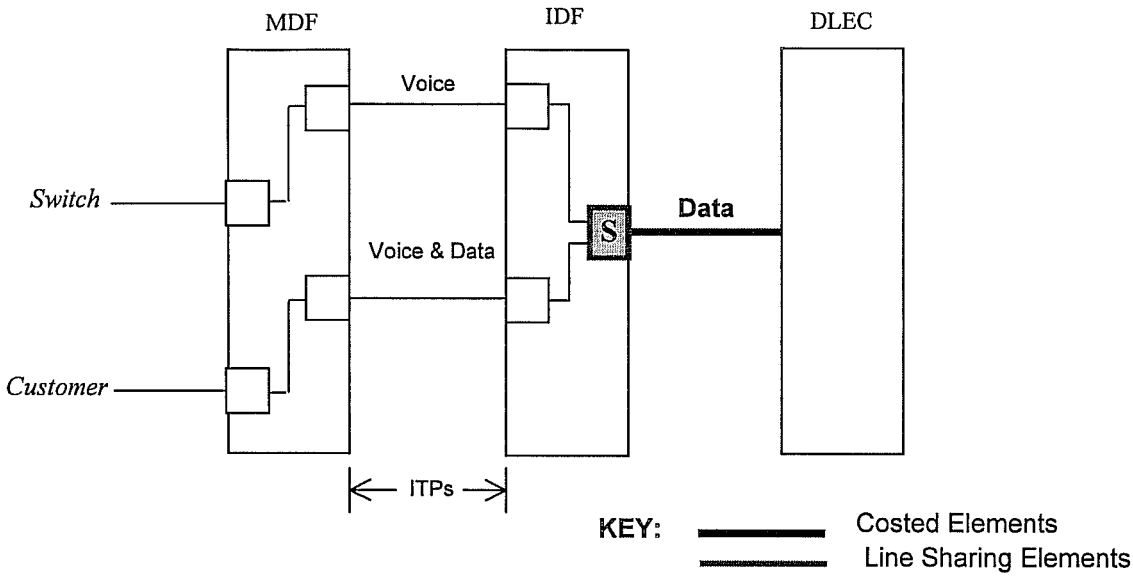

Swi

Custom

Option 2B - Splitter on the IDF: Data Connections to the 410 Block

Option 3

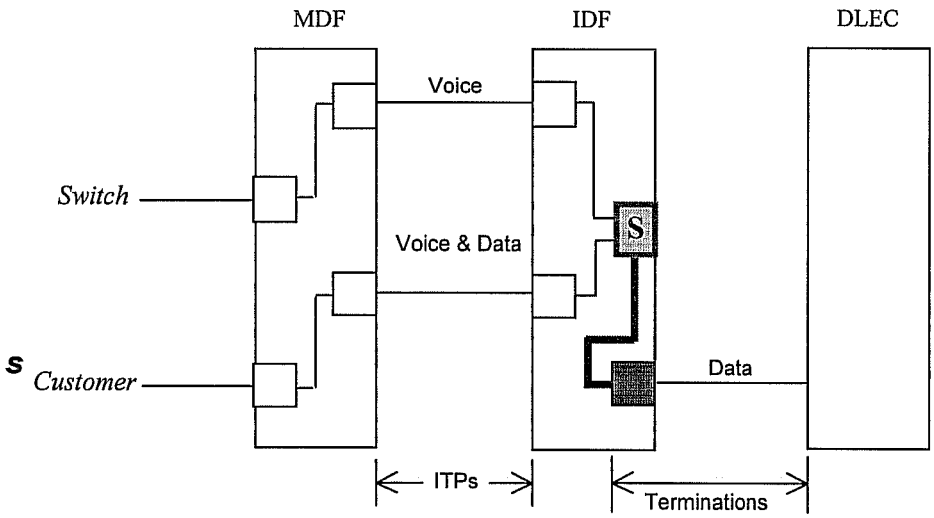

Swi

Custom

Collocation: Line Sharing

A - Splitter on the MDF: Data Connections Direct to DLEC

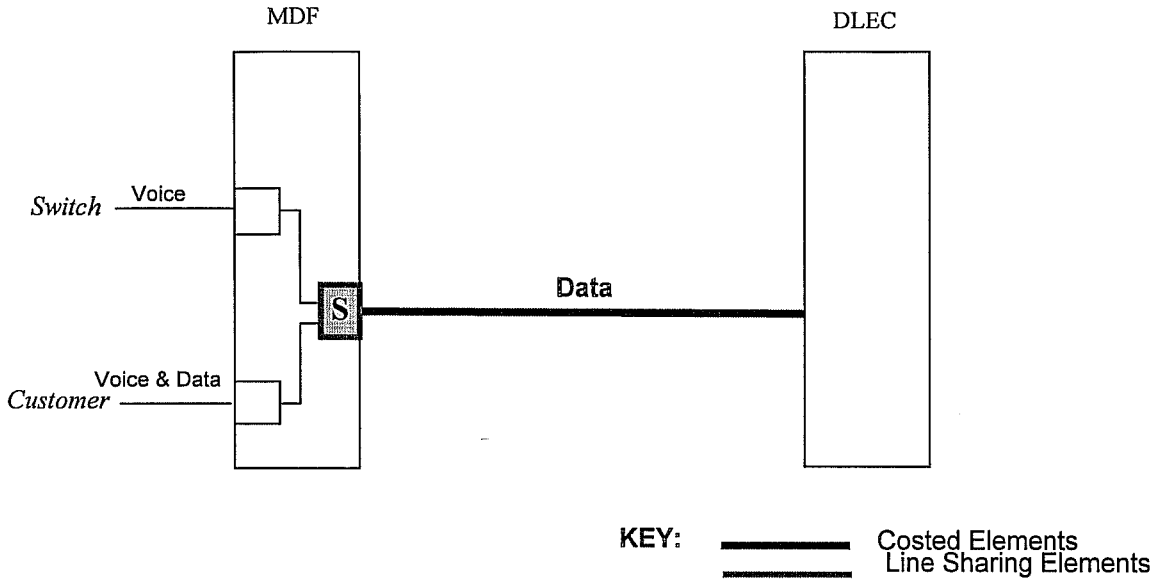

B - Splitter on the MDF: Data Connections to the 410 Block

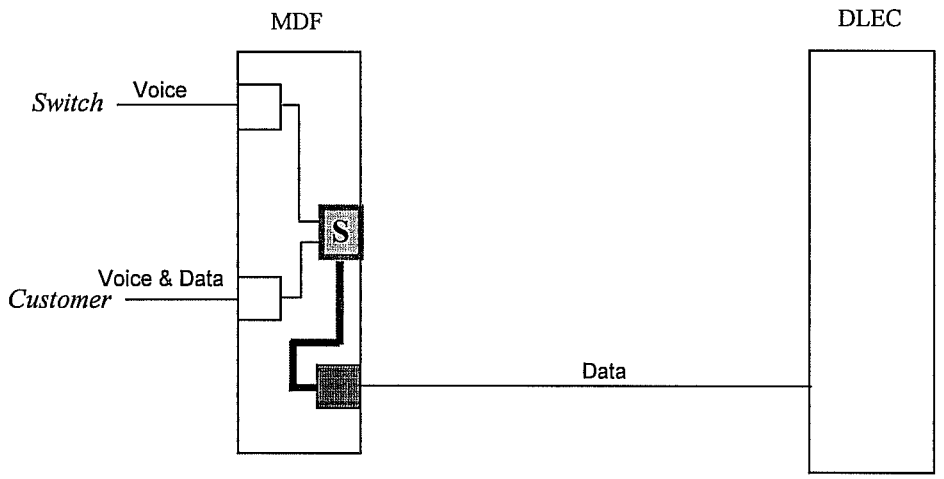

Collocation: Line Sharing

Line Sharing Cost Summary

Costs per Line Sharing Application	Minimum Quantity Required	Expense	Loaded Cost	Recurring Cost
Engineering	1	$ 923.60	$ 1,238.09	-
Total Engineering		**$ 923.60**	**$ 1,238.09**	**-**

Splitter Configuration Options

	Minimum Quantity Required	Expense	Loaded Cost	Recurring Cost
Common Area to 410				
Option 1 - Splitter on the Splitter Bay: Cost Per Splitter and Cards (8 shelves)	1	$ 389.82	$ 522.56	$ 4.70
Option 1B - Splitter on the Splitter Bay: Data Connections to the 410 Block	1	$ 695.95	$ 932.92	$ 2.27
Option 1A & 1B - Splitter on the Splitter Bay: Per Each Voice and Voice/Data Connections	2	$ 802.68	$ 1,076.00	$ 2.62
Total Common Area to 410		**$ 2,691.14**	**$ 3,607.49**	**$ 12.22**
Common Area Direct to DLEC				
Option 1 - Splitter on the Splitter Bay: Cost Per Splitter and Cards (8 shelves)	1	$ 389.82	$ 522.56	$ 4.70
Option 1A - Splitter on the Splitter Bay: Data Connections Direct to DLEC	1	$ 809.88	$ 1,085.66	$ 2.65
Option 1A & 1B - Splitter on the Splitter Bay: Per Each Voice and Voice/Data Connections	2	$ 802.68	$ 1,076.00	$ 2.62
Total Common Area Direct to DLEC		**$ 2,805.07**	**$ 3,760.22**	**$ 12.59**
MDF to 410				
Option 3B - Splitter on the MDF: Data Connections to the 410 Block	1	$ 753.46	$ 1,010.02	$ 2.46
Total MDF to 410		**$ 753.46**	**$ 1,010.02**	**$ 2.46**
MDF Direct to DLEC				
Option 3A - Splitter on the MDF: Data Connections Direct to DLEC	1	$ 1,618.10	$ 2,169.08	$ 5.29
Total MDF Direct to DLEC		**$ 1,618.10**	**$ 2,169.08**	**$ 5.29**
IDF to 410 Block				
Option 2B - Splitter on the IDF: Data Connections to the 410 Block	1	$ 732.46	$ 981.87	$ 2.39
Total IDF to 410 Block		**$ 732.46**	**$ 981.87**	**$ 2.39**
IDF Direct to DLEC				
Option 2A - Splitter on the IDF: Data Connections Direct to DLEC	1	$ 1,371.40	$ 1,838.37	$ 4.48
Total IDF Direct to DLEC		**$ 1,371.40**	**$ 1,838.37**	**$ 4.48**

Collocation: Line Sharing

Engineering

Costs per Line Sharing Application

Hours	20	
Expense/Unit	$ 46.18	
Total Expense		**$ 923.60**

Loading

Total Loaded Cost	**$**	**1,238.09**

ENGINEERING LINE SHARING REQUIREMENTS

PRELIMINARY ENGINEERING **HOURS: 2**

- Drawing Configuration
- Verify Existing Equipment
- Research Associated Jobs
- Verify Existing Office Environment

WALK THROUGH (FIELD SURVEY) **HOURS: 5**

- Bay Location Verification
- Detailed Cable Measurements
- Hardware Assessment
  - To include: Earthquake Bracing
    - Cable Racking Requirements
    - Bay Measurements
    - Ceiling Support
    - Floor Support
- Cable Placement

ENGINEERING **HOURS: 8**

- Material Order
- Material Verification
- Cable Placement on Engineering Prints
- Structure Placement on Engineering Prints
  - To include:
    - Bays
    - Cable Racking
    - Earthquake Bracing
    - Frame Placement
    - Floor Bracing
    - Ceiling Bracing
- Circuit Engineering and Verification
  - To include: All circuit placement and connections including connectivity.

FORMS/FOLLOW-UP **HOURS: 7**

- Installation Verification
  - To include: All Circuit Assignments
    - Equipment Placement
    - Cable Placement
    - Hardware Placement
- Verify Existing Circuits in TIRKS
- Remove Existing Circuits in TIRKS
- Place New Circuit connections in SWITCH
- Communicate Assignment Information to Customer

Option 1 - *Splitter on the Splitter Bay: Cost Per Splitter and Cards*

Bay Expenses

Bay Construction	Material & Labor per Bay	Units	Expense per Bay
Aerial Support	$ 839.71	0.42	$ 352.14
Network Bay (7 foot)	$ 772.88	1.00	$ 772.88
Cable Rack (per 10' section)	$ 959.52	0.84	$ 804.76
Ground Wire (ft)	$ 15.88	14.19	$ 225.41
Lighting (per fixture)	$ 275.91	0.19	$ 53.40
Total			**$ 2,208.59**

Projected Bay-Mounted Splitter per Office	**8**
Expense per Shelf	**$ 276.07**
Mounting Splitter	**$ 113.75**

Total Expense	**$ 389.82**
(Does NOT include splitter and cards which are charged separately)	

Loading

Bay Expense: Total Loaded Cost	**$ 522.56**

Monthly Maintenance

Total Monthly Maintenance	**$ 1.27**

Rent

Rent per Square Foot	**$ 3.05**	
Number of Square Feet per Bay	**$ 9.00**	
Total Investment per Splitter and Cards	**$ 12.05**	**$ 3.43**

Total Monthly Costs	**$ 4.70**

Notes

The cost per splitter is calculated based on taking all costs related to the cost of building the bay and surrounding area and dividing by the number of splitters or shelves that a single bay can house.

Assumptions

This configuration assumes the CLEC has purchased or supplied the splitter and cards.

Option 1A - *Splitter on the Splitter Bay: Data Connections Direct to DLEC*

Cable Expense

Cable Placement

Placement (4, 25-pair Cables)	$ 2.52	1	$ 2.52
Number of feet to Splitter			200.00
Average Expense in Placing Cable			**$ 503.88**

Weighted Cable Expense

Expense Per Foot of 25-pair Cable	$ 0.35
Number of feet to Splitter	200.00
Connector for Cable	$ 6.50
Total Expense for 1, 25-pair Cable with Connector	**$ 76.50**
Number of 25-pair cables needed for 96 terminations	4.00
Total Expense for Cables and Connections to Splitter	**$ 306.00**

Total Expense for 96-pair Data Connections to the Splitter	**$ 809.88**

Loading

Total Loaded Cost for 96-pair Data Connection to the Splitter	**$ 1,085.66**

Monthly Maintenance

Total Monthly Maintenance	**$ 2.65**

Notes

The connections to the splitter are per 96 DS0 equivalents.
Cable lengths are based on cable lengths for actual jobs.

Assumptions

This configuration assumes the CLEC has connections between the MDF and IDF.
This configuration assumes the CLEC has purchased or supplied the splitter and cards.

Option 1B - *Splitter on the Splitter Bay: Data Connections to the 410 Block*

	Material & Labor	Units	Expense per Unit	
Block Expense				
Tying Cables to Block	$ 50.45	4	$ 201.81	
Block Stenciling	$ 59.47	0.333	$ 19.82	
Test and Tone Out for First Three Shelves	$ 169.12	0.333	$ 56.37	
Total Block Expense				**$ 278.01**
Cable Expense				
Cable Placement				
Placement (4, 25-pair Cables)	$ 2.52	1	$ 2.52	
Number of feet to Splitter			100.00	
Average Expense in Placing Cable			**$ 251.94**	
Weighted Cable Expense				
Expense Per Foot of 25-pair Cable			$ 0.35	
Number of feet to Splitter			100.00	
Connector for Cable			$ 6.50	
Total Expense for 1, 25-pair Cable with Connector			**$ 41.50**	
Number of 25 pair cables needed for 96 terminations			4.00	
Total Expense for Cables and Connections to Splitter			**$ 166.00**	
Total Expense for 4 Cables				**$ 417.94**
Total Expense for 96-pair Data Connections to the Splitter				**$ 695.95**
Loading				
Total Loaded Cost for 96-pair Data Connection to the Splitter				**$ 932.92**
Monthly Maintenance				
Total Monthly Maintenance				**$ 2.27**

Notes

Splitter and cards must be purchased separately.
The connections to the splitter are per 96 DS0 equivalents.
Cable lengths are based on cable lengths for actual jobs.

Assumptions

This configuration assumes the CLEC has a termination on the IDF.
This configuration assumes the CLEC has connections between the MDF and IDF.
This configuration assumes the CLEC has purchased or supplied the splitter and cards.

Option 1A & 1B - *Splitter on the Splitter Bay: Per Each Voice and Voice/Data Conn*

	Material & Labor	Units	Expense per Unit	
Block Expense				
89-100 Block	$ 85.46	1	$ 85.46	
Mounting 89-100 Block	$ 21.28	1	$ 21.28	
Total Mounting Labor & Expense for 89-100 Block			**$ 106.74**	
Block Stenciling	$ 59.47	0.333	$ 19.82	
Tying Cables to Block	$ 50.45	4	$ 201.81	
Test and Tone Out	$ 169.12	0.333	$ 56.37	
Total Block Expense				**$ 384.74**
Cable Expense				
Cable Placement				
Placement (4, 25-pair Cables)			$ 2.52	
Number of feet to Splitter			100.00	
Average Expense in Placing Cable			**$ 251.94**	
Weighted Cable Expense				
Expense Per Foot of 25-pair Cable			$ 0.35	
Number of feet to Splitter			100.00	
Connector for Cable			$ 6.50	
Total Expense for 1, 25-pair Cable and Connector			**$ 41.50**	
Number of 25 pair cables needed for 100 terminations			4.00	
Total Expense for Cables and Connections to Splitter			**$ 166.00**	
Total Expense for 4 Cables				**$ 417.94**
Total Expense For 96-pair Connection (Voice or Voice/Data)				**$ 802.68**
Loading				
Total Loaded Cost for Block & 96-pair Connection to Splitter				**$ 1,076.00**
Monthly Maintenance				
Total Monthly Maintenance				**$ 2.62**

Notes

This cost must be multiplied by two for both *Voice* and *Voice/Data* connections.
The connections to the splitter are per 96 DS0 equivalents.
Cable lengths are based on cable lengths for actual jobs.

Assumptions

This configuration assumes the CLEC has a termination on the IDF.
This configuration assumes the CLEC has connections between the MDF and IDF.
This configuration assumes the CLEC has purchased or supplied the splitter and cards.

Option 2A - *Splitter on the IDF: Data Connections Direct to DLEC*

	Material & Labor	Units	Expense per Unit	
Block Expense				
Mounting Splitter Block	$ 21.28	6	$ 127.68	
Block Stenciling	$ 19.82	6	$ 118.93	
Tying 25-pair Cable to Splitter	$ 32.29	6	$ 193.74	
Test and Tone Out	$ 169.12	0.3333	$ 56.37	
Total Expense for Each Block				**$ 496.72**
Cable Expense				
Cable Placement				
Placement (6, 25-pair Cable)	$ 2.34	1.50	$ 3.51	
Number of feet to Splitter			156.00	
Average Expense in Placing Cable			**$ 547.08**	
Cable Expense				
Expense Per Foot of 25-pair Cable			$ 0.35	
Number of feet to Splitter			156.00	
Number of 25-pair Cables Needed for 96 Terminations			6.00	
Total Cable Material Expense			**$ 327.60**	
Total Cable Expense				**$ 874.68**
Total Expense for 96-pair Connection				**$ 1,371.40**
Loading				
Total Loaded Cost for 96-pair Connection				**$ 1,838.37**
Monthly Maintenance				
Total Monthly Maintenance				**$ 4.48**

Notes

CANNOT divide total cost by six to get cost per one block.
The connections to the splitter are per 96 DS0 equivalents.
Average cable lengths are based on cable lengths for actual jobs.

Assumptions

This configuration assumes the CLEC has connections between the MDF and IDF.
This configuration assumes the CLEC has purchased or supplied a splitter blocks.

Option 2B - *Splitter on the IDF: Data Connections to the 410 Block*

Block Expense	Material & Labor	Units	Expense per Unit		
Mounting Splitter Block	$ 21.28	6	$ 127.68		
Block Stenciling (3)	$ 19.82	6	$ 118.93		
Tying 25-pair Cable to Splitter & 410	$ 32.29	12	$ 387.47		
Test and Tone Out	$ 169.12	0.3333	$ 56.37		
Total Expense for Each Block				**$**	**690.46**

Cable Expense

Cable Placement

(*no charge*)	$	-
Average Expense in Placing Cable	**$**	**-**

Cable Expense

Expense Per Foot of 25-pair Cable	$	0.35
Number of Cable Feet on Frame		20.00
Number of 25-pair Cables Needed for 96 Terminations		6.00
Total Cable Material Expense	**$**	**42.00**

Total Cable Material Expense	**$**	**42.00**
Total Expense for 96-pair Connection	**$**	**732.46**

Loading

Total Loaded Cost for 96-pair Connection	**$**	**981.87**

Monthly Maintenance

Total Monthly Maintenance	**$**	**2.39**

Notes

CANNOT divide total cost by six to get cost per one block.
The connections to the splitter are per 96 DS0 equivalents.
Average cable lengths are based on cable lengths for actual jobs.

Assumptions

This configuration assumes the CLEC has purchased a Termination on the IDF.
This configuration assumes the CLEC has connections between the MDF and IDF.
This configuration assumes the CLEC has purchased or supplied a splitter blocks.

Collocation: Line Sharing

Option 3A - *Splitter on the MDF: Data Connections Direct to DLEC*

	Material & Labor	Units	Expense per Unit		
Block Expense					
Mounting Splitter Block	$ 21.28	6	$ 127.68		
Block Stenciling	$ 19.82	6	$ 118.93		
Tying Cable to Splitter	$ 32.29	6	$ 193.74		
Test and Tone Out	$ 169.12	0.3333	$ 56.37		
Total Cost for Each Block				$	496.72
Cable Expense					
Cable Placement					
Placement (6, 25-pair Cables)	$ 2.34	1.50	$ 3.51		
Number of Feet to Splitter			200.00		
Average Expense in Placing Cable			**$ 701.38**		
Cable Expense					
Expense Per Foot of 25-pair Cable			$ 0.35		
Number of Feet to Splitter			200.00		
Number of 25-pair Cables Needed for 96 Terminations			6.00		
Total Cable Material Expense			**$ 420.00**		
Total Cable Expense				$	1,121.38
Total Expense for 96-pair Connection				$	1,618.10
Loading					
Total Loaded Cost for 96-pair Connection				$	2,169.08
Monthly Maintenance					
Total Monthly Maintenance				$	5.29

Notes

CANNOT divide total cost by six to get cost per one block.
The connections to the splitter are per 96 DS0 equivalents.
Average cable lengths are based on cable lengths for actual jobs.

Assumptions

This configuration assumes the CLEC has purchased or supplied the splitter blocks.

Option 3B - *Splitter on the MDF: Data Connections to the 410 Block*

Block Expense	Material & Labor	Units	Expense per Unit	
Mounting Splitter Block	$ 21.28	6	$ 127.68	
Block Stenciling	$ 19.82	6	$ 118.93	
Tying Cable to Splitter	$ 32.29	12	$ 387.47	
Test and Tone Out	$ 169.12	0.3333	$ 56.37	
Total Cost for Each Block				**$ 690.46**

Cable Expense

Cable Placement

(*no charge*)	$	-
Average Expense in Placing Cable	**$**	**-**

Cable Expense

Expense Per Foot of 25-pair Cable	$	0.35
Number of Feet to Splitter		30.00
Number of 25-pair Cables Needed for 96 Terminations		6.00
Total Cable Material Expense	**$**	**63.00**

Total Cable Expense	**$**	**63.00**
Total Expense for 96-pair Connection	**$**	**753.46**

Loading

Total Loaded Cost for 96-pair Connection	**$**	**1,010.02**

Monthly Maintenance

Total Monthly Maintenance	**$**	**2.46**

Notes

CANNOT divide total cost by six to get cost per one block.
The connections to the splitter are per 96 DS0 equivalents.
Average cable lengths are based on cable lengths for actual jobs.

Assumptions

This configuration assumes the CLEC has purchased or supplied the splitter blocks.

CONTINUATION # [33]

Collocation: Line Sharing

WCP Maintenance

	Factor Value	Shelf Cost	Splitter Bay A Cost	Splitter Bay B Cost	Splitter Bay C Cost	MDF-DLEC Splitter Cost	MDF-410 Splitter Cost	IDF-DLEC Splitter Cost	IDF-410 Splitter Cost
Investment		$ 389.82	$ 695.95	$ 809.88	$ 802.68	$ 1,618.10	$ 753.46	$ 1,371.40	$ 732.46
Investment Based Costs									
Maintenance	0.029242	$0.95	$1.70	$1.97	$1.96	$3.94	$1.84	$3.34	$1.78
Directly Assigned									
Product Management Expense	0.025565	$0.02429	$0.04336	$0.05045	$0.05001	$0.10080	$0.04694	$0.08543	$0.04563
Sales Expense	0.009225	$0.00876	$0.01564	$0.01821	$0.01804	$0.03637	$0.01694	$0.03083	$0.01647
Product Advertising Expense	0.000000	$0.00000	$0.00000	$0.00000	$0.00000	$0.00000	$0.00000	$0.00000	$0.00000
Business Fees (Other Operating Taxes)	0.002025	$0.00199	$0.00355	$0.00414	$0.00410	$0.00826	$0.00385	$0.00700	$0.00374
Directly Assigned Costs		$0.03504	$0.06255	$0.07280	$0.0721	$0.1454	$0.0677	$0.1233	$0.0658
Total Direct Costs		$0.98497	$1.75846	$2.04634	$2.0282	$4.0885	$1.9038	$3.4651	$1.8507
Directly Attributed									
Network Operations	0.040880	$0.04027	$0.07189	$0.08365	$0.0829	$0.1671	$0.0778	$0.1417	$0.0757
Network Support Assets	0.015364	$0.01513	$0.02702	$0.03144	$0.0312	$0.0628	$0.0292	$0.0532	$0.0284
General Support Assets	0.069508	$0.06846	$0.12223	$0.14224	$0.1410	$0.2842	$0.1323	$0.2409	$0.1286
General Purpose Computers	0.034714	$0.03419	$0.06104	$0.07104	$0.0704	$0.1419	$0.0661	$0.1203	$0.0642
Uncollectible	0.000401	$0.00039	$0.00071	$0.00082	$0.0008	$0.0016	$0.0008	$0.0014	$0.0007
Accounting & Finance Expense	0.008839	$0.00871	$0.01554	$0.01809	$0.0179	$0.0361	$0.0168	$0.0306	$0.0164
Human Resources Expense	0.008145	$0.00802	$0.01432	$0.01667	$0.0165	$0.0333	$0.0155	$0.0282	$0.0151
Information Management Expense	0.057009	$0.05615	$0.10025	$0.11666	$0.1156	$0.2331	$0.1085	$0.1975	$0.1055
Intangibles	0.002091	$0.00206	$0.00368	$0.00428	$0.0042	$0.0085	$0.0040	$0.0072	$0.0039
Directly Attributed Costs		$0.23339	$0.41667	$0.48488	$0.4806	$0.9688	$0.4511	$0.8211	$0.4385
TELRIC		$1.21837	$2.17513	$2.53123	$2.5087	$5.0572	$2.3549	$4.2862	$2.2892

Collocation: Line Sharing

Monthly Maintenance *(continued)*

Common									
Executive Expense	**0.007805**	**$0.00951**	**$0.01698**	**$0.01976**	**$0.0196**	**$0.0395**	**$0.0184**	**$0.0335**	**$0.0179**
Planning Expense	**0.000580**	**$0.00071**	**$0.00126**	**$0.00147**	**$0.0015**	**$0.0029**	**$0.0014**	**$0.0025**	**$0.0013**
External Relations Expense	**0.013029**	**$0.01587**	**$0.02834**	**$0.03298**	**$0.0327**	**$0.0659**	**$0.0307**	**$0.0558**	**$0.0298**
Legal Expense	**0.006148**	**$0.00749**	**$0.01337**	**$0.01556**	**$0.0154**	**$0.0311**	**$0.0145**	**$0.0264**	**$0.0141**
Other Procurement Expense	**0.002359**	**$0.00287**	**$0.00513**	**$0.00597**	**$0.0059**	**$0.0119**	**$0.0056**	**$0.0101**	**$0.0054**
Research & Development Expense	**0.000036**	**$0.00004**	**$0.00008**	**$0.00009**	**$0.0001**	**$0.0002**	**$0.0001**	**$0.0002**	**$0.0001**
Other General and Admin Expense	**0.015212**	**$0.01853**	**$0.03309**	**$0.03851**	**$0.0382**	**$0.0769**	**$0.0358**	**$0.0652**	**$0.0348**
Common Costs		**$0.05503**	**$0.09825**	**$0.11433**	**$0.1133**	**$0.2284**	**$0.1064**	**$0.1936**	**$0.1034**
TELRIC + Common Costs		**$1.27340**	**$2.27338**	**$2.64556**	**$2.6220**	**$5.2857**	**$2.4612**	**$4.4798**	**$2.3926**

Collocation: Line Sharing

WCP Non-Recurring

	Factor Value	Engineering Cost	Shelf Cost	Splitter Bay A Cost	Splitter Bay B Cost	Splitter Bay C Cost	MDF-DLEC Splitter Cost	MDF-410 Splitter Cost	IDF-DLEC Splitter Cost	IDF-410 Splitter Cost
Expense		$ 923.60	$ 389.82	$ 695.95	$ 809.88	$ 802.68	$ 1,618.10	$ 753.46	$ 1,371.40	$ 732.46
Directly Assigned										
Product Management Expense	0.025565	$ 23.61	$ 9.97	$ 17.79	$ 20.70	$ 20.52	$ 41.37	$ 19.26	$ 35.06	$ 18.73
Sales Expense	0.009225	$ 8.52	$ 3.60	$ 6.42	$ 7.47	$ 7.40	$ 14.93	$ 6.95	$ 12.65	$ 6.76
Product Advertising Expense	0.000000	$ -	$ -	$ -	$ -	$ -	$ -	$ -	$ -	$ -
Business Fees (Other Operating Taxes	0.002025	$ 1.94	$ 0.82	$ 1.46	$ 1.70	$ 1.68	$ 3.39	$ 1.58	$ 2.87	$ 1.53
Directly Assigned Costs		$ 34.07	$ 14.38	$ 25.67	$ 29.87	$ 29.61	$ 59.68	$ 27.79	$ 50.58	$ 27.02
Total Direct Monthly Costs		$ 957.67	$ 404.20	$ 721.62	$ 839.76	$ 832.29	$ 1,677.78	$ 781.25	$ 1,421.98	$ 759.47
Directly Attributed										
Network Operations	0.040880	$ 39.15	$ 16.52	$ 29.50	$ 34.33	$ 34.02	$ 68.59	$ 31.94	$ 58.13	$ 31.05
Network Support Assets	0.015364	$ 14.71	$ 6.21	$ 11.09	$ 12.90	$ 12.79	$ 25.78	$ 12.00	$ 21.85	$ 11.67
General Support Assets	0.069508	$ 66.57	$ 28.10	$ 50.16	$ 58.37	$ 57.85	$ 116.62	$ 54.30	$ 98.84	$ 52.79
General Purpose Computers	0.034714	$ 33.24	$ 14.03	$ 25.05	$ 29.15	$ 28.89	$ 58.24	$ 27.12	$ 49.36	$ 26.36
Uncollectible	0.000401	$ 0.38	$ 0.16	$ 0.29	$ 0.34	$ 0.33	$ 0.67	$ 0.31	$ 0.57	$ 0.30
Accounting & Finance Expense	0.008839	$ 8.46	$ 3.57	$ 6.38	$ 7.42	$ 7.36	$ 14.83	$ 6.91	$ 12.57	$ 6.71
Human Resources Expense	0.008145	$ 7.80	$ 3.29	$ 5.88	$ 6.84	$ 6.78	$ 13.67	$ 6.36	$ 11.58	$ 6.19
Information Management Expense	0.057009	$ 54.60	$ 23.04	$ 41.14	$ 47.87	$ 47.45	$ 95.65	$ 44.54	$ 81.07	$ 43.30
Intangibles	0.002091	$ 2.00	$ 0.85	$ 1.51	$ 1.76	$ 1.74	$ 3.51	$ 1.63	$ 2.97	$ 1.59
State Prescribed Directly Attributed	0.000000	$0.00	$0.00	$0.00	$0.00	$0.00	$0.00	$0.00	$0.00	$0.00
Directly Attributed Costs		$ 226.92	$ 95.78	$ 170.99	$ 198.98	$ 197.21	$ 397.55	$ 185.12	$ 336.94	$ 179.96
TELRIC		$ 1,184.59	$ 499.98	$ 892.61	$ 1,038.74	$ 1,029.50	$ 2,075.34	$ 966.37	$ 1,758.92	$ 939.43

Collocation: Line Sharing

WCP Non-Recurring (continued)

Common										
Executive Expense	0.007805	$ 9.25	$ 3.90	$ 6.97	$ 8.11	$ 8.04	$ 16.20	$ 7.54	$ 13.73	$ 7.33
Planning Expense	0.000580	$ 0.69	$ 0.29	$ 0.52	$ 0.60	$ 0.60	$ 1.20	$ 0.56	$ 1.02	$ 0.54
External Relations Expense	0.013029	$ 15.43	$ 6.51	$ 11.63	$ 13.53	$ 13.41	$ 27.04	$ 12.59	$ 22.92	$ 12.24
Legal Expense	0.006148	$ 7.28	$ 3.07	$ 5.49	$ 6.39	$ 6.33	$ 12.76	$ 5.94	$ 10.81	$ 5.78
Other Procurement Expense	0.002359	$ 2.79	$ 1.18	$ 2.11	$ 2.45	$ 2.43	$ 4.90	$ 2.28	$ 4.15	$ 2.22
Research & Development Expense	0.000036	$ 0.04	$ 0.02	$ 0.03	$ 0.04	$ 0.04	$ 0.07	$ 0.03	$ 0.06	$ 0.03
Other General and Admin Expense	0.015212	$ 18.02	$ 7.61	$ 13.58	$ 15.80	$ 15.66	$ 31.57	$ 14.70	$ 26.76	$ 14.29
State Prescribed Common	0.000000	$0.00	$0.00	$0.00	$0.00	$0.00	$0.00	$0.00	$0.00	$0.00
Common Costs		$ 53.51	$ 22.58	$ 40.32	$ 46.92	$ 46.50	$ 93.74	$ 43.65	$ 79.45	$ 42.43
TELRIC + Common Costs		$ 1,238.09	$ 522.56	$ 932.92	$ 1,085.66	$ 1,076.00	$ 2,169.08	$ 1,010.02	$ 1,838.37	$ 981.87

Line Sharing
Collocation Model Worksheet

Bay Construction

Bay		
Number of Bays		1
Expense per Bay	$	279.71
Total Material Expense	$	279.71
Shipping	$	39.13
Sales Tax	$	15.78
90 Day Labor Expense per Bay	$	438.27
90 Day Labor Expense add'l Bay	$	332.62
Total 90 Day Labor Expense	$	438.27
Total 90 Day Expense	$	717.98
Total Bay Construction	**$**	**772.88**

Line Sharing
Collocation Model Worksheet

Lighting

Fixtures		
Number of Fixtures		1.00
Expense per Fixture	$	111.70
90 Day Labor Expense per Fixture	$	202.12
Total Fixture Expense	**$**	**313.82**
Lights		
Number of Lights		1.00
Expense per Light	$	103.96
90 Day Labor expense per Light	$	202.12
Total Light Expense	**$**	**306.08**
Cable		
Number of Cables		1
expense per Cable	$	0.37
90 Day Labor expense per Cable	$	3.31
Total cable expense	**$**	**3.68**
Wire		
Number of Wires		1
expense per Wire	$	0.25
90 Day Labor Expense per Wire	$	2.77
Total wire expense	**$**	**3.02**
Other		
Number of Conduit Supports per fixture		4.69
expense per Conduit Support	$	0.11
Total	*$*	*0.50*
Number of Outlet Raceways per fixture		0.89
expense per Outlet Raceway	$	44.11
Total	*$*	*39.07*
Number of Supports per fixture		3.18
expense per Support	$	8.42
Total	*$*	*26.79*
Number of Switches per fixture		0.47
Expense per Switch	$	97.81
Total	*$*	*45.64*
Number of Fittings per fixture		3.41
Expense per Fitting	$	4.74
Total	*$*	*16.16*
Number of Fitting Supports per fixture		0.29
Expense per Fitting Supports	$	13.67
Total	*$*	*3.91*
Number of Miscellaneous Items per fixture		2.04
Expense per Miscellaneous Item	$	0.27
Total	*$*	*0.56*
Total Other	**$**	**132.63**

Line Sharing
Collocation Model Worksheet

Shipping	$	48.81
Taxes	$	19.68
Total 90 Day Expense	**$**	**827.72**

Line Sharing
Actuals

BVAPP - (BVMV...)	Average Units	71049	71050	71051	71342	71343	71341	71323	71340	71339	71344	71345	71322	71899	71908	71900	71856	71886	71903	71847	71895	71893	71815	71896	71805	71852	71911	71897	71905	71817	71830	71910
Cabling Footage	100.00	150	100	75	80	100	180	80	100	180	100	75	100	120	120	180	120	85	20	120	120	220	120	50	100	100	65	65	100	220	50	50
Bay Ironwork (per bay)	0.42	1	1	1	0	0	0	0	0	0	0	0	0	0	1	0	1	1	1	0	0	1	1	0	1	0	1	0	1	0	0	1
Cable Rack (10' Pieces)	0.84	3	2	2	0	0	0	0	0	0	0	0	0	0	3	0	2	1	2	0	0	3	0	0	2	0	1	0	3	0	0	2
Ground Wire (ft)	14.19	30	30	30	0	0	0	0	0	0	0	0	0	0	30	0	25	10	40	0	0	75	10	0	40	0	10	0	60	0	0	50
Lighting (per fixture)incl in labor	0.19	1	1	1	0	0	0	0	0	0	0	0	0	0	0	0	0	1	0	0	0	0	1	0	0	0	0	0	0	0	0	1

South Dakota Public Utilities Commission
Docket No. TC 01_____
Qwest Corporation

Attachment 4

Study No. 5116
OSS Line Sharing

Qwest

ACCESS TO OPERATIONAL SUPPORT SYSTEMS FOR INTERCONNECTION - Line Sharing Study ID 5116

SOUTH DAKOTA

2001 RECURRING COST STUDY

July 2001

This cost study reflects the cost of Operational Support Systems (OSS) related to Line Sharing

A. PURPOSE, SCOPE, AND APPLICATION

The purpose of this study is to determine the Line Sharing Operational Support Systems (OSS) cost that will be incurred by QWEST to provide to OSS for Line Sharing.

B. DESCRIPTION OF SERVICE

The OSS investment and expense dollars are the costs that will be incurred by QWEST to support Line Sharing. Line Sharing is making available the opportunity for the Co-Provider (data Competitive Local Exchange Carrier) to offer Digital Subscriber Line (DSL)-qualified advanced data services within the spectrum of an existing QWEST end user's analog voice-grade service.

C. STUDY METHODOLOGY

The QWEST Wholesale Cost Program was used to convert investments and expenses to 2000 costs by applying the appropriate South Dakota capital and expense factors. The costs displayed do not include any ongoing maintenance costs, product specific advertising expenses, and pre - sales expenses or sales compensation expenses.

The costs of making the opportunity of providing data services over existing QWEST end user lines available include not only QWEST planning, programming, training, and support but also enhancements and modifications to existing operational support systems.

D. STUDY ASSUMPTIONS

1. The study assumes cost recovery of 2000 OSS enhancement and upgrade expenses and investments over a 5-year period beginning in 2001 and ending in 2005.
2. CLEC Line Sharing demand is based on a limited amount of information that QWEST was able to obtain from the data CLECs.
3. In this cost study, QWEST has not used the economic depreciation lives (and/or cost of money) that it advocates. QWEST does not advocate the depreciation lives (and/or cost of money) used in this study, nor does it believe that they are appropriate inputs for its cost studies beyond the scope of this application.
4. Ongoing maintenance expenses associated with these Line Sharing Start Up OSS costs are included in a separate cost study.
5. This study assumes that billing for Line Sharing OSS will appear on the Shared Line bill. The only billing costs included in this cost study are those incurred by Information Technologies to ensure that the separate Line Sharing OSS charge appears on the Shared Line bill.

OPERATIONAL SUPPORT SYSTEMS
INTERCONNECTION
LINE SHARING

TABLE OF CONTENTS

Tab		Page
SECTION 1 – Study Output		
	Executive Summary	1
	WINPC3 – Study Summary	2
	WINPC3 Output	3
	Total Product Costs	4
	Investment Cost Calc	5
SECTION 2 – Cost Calculations		
	Inputs	6
	Demand	7
	Expenses	8
	Summary	9
	WINPC3 Investments	10
	WINPC3 Parameters	11
	WINPC3 ACF Inputs	12
	WINPC3 ACF Outputs	14
SECTION 3 – Miscellaneous		
	Study Input Requirements	17
	Demand Input	18
	Read Me	19

Study Name	*LINE SHARING OSS PER LINE*	
Study Requester	*D. Gollehon*	
Type of Study	*TELRIC*	
Study ID	*5116*	
Cost Factor Group	*Interconnection*	
Study Applications		
Completion Date	*May 17, 2001*	
Cost Analyst	*Nancy Frazee*	
Study Review	**Reviewer**	**Date**
		May 17, 2001
Models Used	**Model**	**Version**
	Model Used	*OSS Line Sharing Tab*
	Wholesale Cost Program	*2.07*
	Cost Factor Databases	*00SD02E*
	Cost Factors Model (TELRIC)	*00V2*
Cost Factors Used	**Factor**	**Effective Date**
	Capital Recovery	*01/01*
	Ad Valorem	*01/01*
	Sales Tax	*01/01*
	Interest During Construction	*01/01*
	COE Land & Bldg	*01/01*
	Directly Assigned Factors	*01/01*
	Directly Attributable Factors	*01/01*
	Common	*01/01*
	Cost Of Money	*10.14%*
Inflation		
Major Cost Drivers		

Parameter File: I:\SLHILL-Team\OSS\SD OSS Studies\SD OSS LINE SHARING.xls, Sheet "WINPC3 Parameters"
State(s): SD
Database Vintage: 00SD02E
Factors For: Interconnection
Report Type: ICM Format
Decimal Places: 6
Costs Format: Monthly
Group Totals: Yes
ACF Input: I:\SLHILL-Team\OSS\SD OSS Studies\SD OSS LINE SHARING.xls, Sheet "WINPC3 ACF Inputs"
ACF Output: I:\SLHILL-Team\OSS\SD OSS Studies\SD OSS LINE SHARING.xls, Sheet "WINPC3 ACF Outputs"
Investment: I:\SLHILL-Team\OSS\SD OSS Studies\SD OSS LINE SHARING.xls, Sheet "WINPC3 Investments"
Output: I:\SLHILL-Team\OSS\SD OSS Studies\SD OSS LINE SHARING.xls, Sheet "WINPC3 Output"

State: South Dakota

Description	Loaded Investment	Direct Expense	Total Direct	Network Support	Directly Attributed	TELRIC	Common	TELRIC + Common
LINE SHARING OSS PER LINE	$0.000000	$2.343115	$2.407883	$0.135429	$0.570550	$2.978434	$0.134533	$3.112967

5/17/01 8:29 AM

Row	South Dakota	Source or Calculation	Factor Value	LINE SHARING OSS PER LINE
			A	B
1	**Investment**	sl r"Total" cD		0.000000
2				
3	***Investment Based Costs***	***sl r"Total" cK***		0.000000
4				
5	Direct Expenses			2.343115
6	Miscellaneous Expenses			0.000000
7	Billing & Collection - PL			0.000000
8	***Investment Based + Direct Costs***			2.343115
9				
10	***Directly Assigned***			
11	Product Management Expense	cA*(r8-r6)	0.025565	0.059902
12	Sales Expense			0.000000
13	Product Advertising Expense			0.000000
14	Business Fees (Other Operating Taxes)	cA*(Sum(r8:r13)-r6)	0.002025	0.004866
15	***Directly Assigned Costs***	***Sum r11:r14***		0.064768
16				
17	***Total Direct Costs***	***r8 + r15***		2.407883
18				
19	***Directly Attributed***			
20	Network Operations	cA*(r17-r6)	0.040880	0.098434
21	Network Support Assets	cA*(r17-r6)	0.015364	0.036995
22	General Support Assets	cA*(r17-r6)	0.069508	0.167367
23	General Purpose Computers	cA*(r17-r6)	0.034714	0.083587
24	Uncollectible	cA*(r17-r6)	0.000401	0.000966
25	Accounting & Finance Expense	cA*(r17-r6)	0.008839	0.021283
26	Human Resources Expense	cA*(r17-r6)	0.008145	0.019612
27	Information Management Expense	cA*(r17-r6)	0.057009	0.137271
28	Intangibles	cA*(r17-r6)	0.002091	0.005035
29	***Directly Attributed Costs***	***Sum r20:r28***		0.570550
30				
31	***TELRIC***	***r17 + r29***		2.978434
32				
33	***Common***			
34	Executive Expense	cA*(r31-r6)	0.007805	0.023247
35	Planning Expense	cA*(r31-r6)	0.000580	0.001727
36	External Relations Expense	cA*(r31-r6)	0.013029	0.038806
37	Legal Expense	cA*(r31-r6)	0.006148	0.018311
38	Other Procurement Expense	cA*(r31-r6)	0.002359	0.007026
39	Research & Development Expense	cA*(r31-r6)	0.000036	0.000107
40	Other General and Admin Expense	cA*(r31-r6)	0.015212	0.045308
41	***Common Costs***	***Sum r34:r40***		0.134533
42				
43	***TELRIC + Common Costs***	***r31 + r41***		3.112967

5/17/01
South Dakota

LINE SHARING OSS PER LINE

Acct	FRC	Account Name	Investment	Depreciation	Cost Of Money	Income Tax	Ad Valorem	Maintenance	Switch RTU	Total Capital Costs

LINE SHARING OSS PER LINE

	Total		0.000000	0.000000	0.000000	0.000000	0.000000	0.000000	0.000000	0.000000

Service:	**OSS LINE SHARING**
Jurisdiction:	South Dakota
2-character Abbreviation	SD
Product Group:	Interconnect
Cost Year:	2001
Study Date:	May-01

SECTION A

Levelizing and Present Worth Factors
Source: MSEA Website
Tab: Study Input Requirements

Discount Rate	10.14%
Levelizing Period (years)	5

SECTION B

Expenses
Source: Information Technology Group
Tab: OSS Line Sharing

IT Labor & Project Management	Expense	$	11,900,000.00
Direct Expenses Including Telcordia	Expense	$	375,260.00

SECTION C

Demand
Source: Forecasting
Tab: Demand Input

2001	35,248
2002	71,081
2003	116,659
2004	170,520
2005	231,422

OSS LINE SHARING

South Dakota

Demand

Demand

1.	Forecasted Demand	*Inputs Tab, Sec C*	
	a. 2001		35,248
	b. 2002		71,081
	c. 2003		116,659
	d. 2004		170,520
	e. 2005		231,422
2.	Total Net Present Value of Demand	*NPV of Line 1a:e*	**436,572**
	using:		
	Discount Rate	*Inputs Tab, Sec A*	10.14%
	Levelizing Period (years)	*Inputs Tab, Sec A*	5
3.	Levelized Annual Demand	*A/P of Line 2*	**115,579**
	using:		
	Discount Rate	*Inputs Tab, Sec A*	10.14%
	Levelizing Period (years)	*Inputs Tab, Sec A*	5

OSS LINE SHARING

South Dakota

Expense (Includes Telcordia)

Expense

1. Direct Expenses Including Telcordia	*Inputs Tab, Sec B*	$	11,900,000.00
2. IT Labor & Project Management	*Inputs Tab, Sec B*	$	375,260.00
3. Total Expense	*Ln 1 + Ln 2*	$	12,275,260.00
4. Levelized Annual Expense	*A/P of Line 3*		$3,249,772.25
using:			
Discount Rate	*Inputs Tab, Sec A*		10.14%
Levelizing Period (years)	*Inputs Tab, Sec A*		5
5. Levelized Annual Demand	*Demand Tab, Ln 3*		115,579
6. Annual Expense per Line	*Ln4 / Ln5*	$	28.12
7. Monthly Expense per Line	*Ln6 / 12 months*	$	2.34

OSS LINE SHARING

South Dakota

Summary

Investment per Line	Annual Expense per Line	Total
A	B	C=A+B
from: Investments Tab, Ln 3	*from: Expenses Tab, Ln 7*	*to: WINPC3 Investments Tab*

Summary per OSS Shared Line

Expense	$	2.34	$	2.34

	A	B	C	D	E	F	G	H	I
1	Investment								
2	STUDY	LINE SHARING OSS PER LINE							
3	DATE	5/17/01							
4	GROUP	LINE SHARING OSS PER LINE						Model Used	Tab
5	COMMON	SD	2.3431154394		0.		LINE SHARING OSS EXPENSES	OSS Line Sharing Tab	Summary

	A	B
1	Parameter	
2	SD	
3	7	
4	6	
5	Monthly	12
6	Yes	
7	No	
8		
9	11	
10	5116	

	A	B	C	D	E	F	G	H	I	J	K	L	M	N	O
1	ACFIN														
2	00SD02E														
3	2124	DEPR-5YR	COM-5YR	IT-5YR	DEPR-AVG	COM-AVG	IT-AVG	ADVAL	SALES	IDC	BLDG	LAND	PRODMAN	BF	NTWKOP

	P	Q	R	S	T	U	V	W	X	Y	Z	AA	AB	AC	AD
1															
2															
3	NTWKST	GENLST	COMPTR	UNCOLL	ACCNT	HREXP	INTAN	EXEC	PLAN	EXTERN	INFOR	LEGAL	PROCR	RDEXP	GENL

	A	B	C	D	E	F	G	H	I	J	K	L	M
1	ACFOUT	Factors For: Interconnection											
2	*-Run Done With Database Vintage: 00SD02E, Dated: 02/15/01*												
3	*-Wholesale Cost Program (TELRIC) Data Base released 02/01 (00SD02E).*												
4	*-Factors loaded from Factors Model (Expense Module), Version 00V2.*												
5	*-CAPITAL RECOVERY factors released 01/01 and based on 10.14% Cost*												
6	*Of Money. No 1-10 year factors developed.*												
7	*-MAINTENANCE factors released 01/01.*												
8	*-RTU factors released 02/01.*												
9	*-AD VALOREM Tax released 01/01.*												
10	*-DIRECTLY ASSIGNED expense factors released 01/01.*												
11	*-BUSINESS FEES released 01/01.*												
12	*-COMMON Expense released 01/01.*												
13	*-TOTAL INSTALLED FACTORS (TIF) released 01/01.*												
14	*-POWER investment factors released 01/01.*												
15	*-SALES TAX released 01/01.*												
16	*-TELCO Engineering factors released 01/01.*												
17	*-INTEREST DURING CONSTRUCTION released 01/01.*												
18	*-LAND AND BUILDING factors released 01/01.*												
19	*-DIRECTLY ATTRIBUTABLE expense factors released 01/01.*												
20	*-SALES EXPENSE factor released 01/01.*												
21	*-PRODUCT MANAGEMENT factor released 01/01.*												
22	*-BILLING & COLLECTION factor released 01/01.*												
23	*-PROVISIONING factors released 01/01.*												
24	*-TELEPHONE PLANT INDEX released 01/01.*												
25	*-STRUCTURE RATIO released 01/01.*												
26													
27													
28													
29													
30													
31													
32	**State:**												
33													

	A	B	C	D	E	F	G	H	I	J	K	L	M	N	O	P
34	***ACCOUNTS***															
35	***20C***															
36	***110C***															
37																
38	State:	South Dakota														
39																
40	**ACCOUNTS**	**DEPR-5YR**	**COM-5YR**	**IT-5YR**	**DEPR-AVG**	**COM-AVG**	**IT-AVG**	**ECONLIFE**	**ADVAL**	**SALES**	**IDC**	**BLDG**	**LAND**	**PRODMAN**	**BF**	**NTWKOP**
41	2124	0.000000	0.000000	0.000000	0.164850	0.047620	0.018008	0.230478	0.008613	0.056400	0.006100	0.000000	0.000000	0.025565	0.002025	0.04088(

	Q	R	S	T	U	V	W	X	Y	Z	AA	AB	AC	AD	AE
34															
35															
36															
37															
38															
39															
40	NTWKST	GENLST	COMPTR	UNCOLL	ACCNT	HREXP	INTAN	EXEC	PLAN	EXTERN	INFOR	LEGAL	PROCR	RDEXP	GENL
41	0.015364	0.069508	0.034714	0.000401	0.008839	0.008145	0.002091	0.007805	0.000580	0.013029	0.057009	0.006148	0.002359	0.000036	0.015212

EFFECTIVE DATE: May 14, 2001	SD			
TYPE of STUDY	TSLRIC		TELRIC	
Place a "X" were appropriate; Under Economic place a "X or ?" ? =	Economic	Commission	Economic	Commission
Retail				
Rate/Price Case	?	X		
Individual Rate Filings		X		
Filing Requirements				
Wholesale				
Cost Docket			?	X
Individual Rate Filings				X
Filing Requirements				
Inputs				
Depreciation (Economic, Prescribed, Ordered)	Economic	Prescribed-STATE	Economic	Prescribed-STATE
Deaverage (Yes)				
State Specific Adjustments (Yes)				
Composite Cost of Money Percentage	12.74%	10.14%	12.74%	10.14%
PRETAX Discount Rate	18.76%	13.98%	18.76%	13.98%
Major Models				
Current - see Section 3 for current model releases				
WINPC3 Factor Vintage	Current	00SD02S	Current	00SD02E
NRC Factor Vintage	Current	00SD02S	Current	00SD02E
SCM - Switching Feature Module	Current	Current	Current	Current
SUM - Switching Usage Module	Current	Current	Current	Current
Loop - RLCAP / LoopMod	Current	Current	Current	Current
NAC	Current	Current	Current	Current
Transport	Current	Current	Current	Current
ICM				
NOTES	State adjustments included in precribed factors.			

GENERAL NOTES

Forecasts Received as of 7/20/2000

Line Sharing Demand

	2000	2001	2002	2003	2004	2005
Wholesale Projected Number of Line Sharing Lines	10,880	35,248	71,081	116,659	170,520	231,422

OSS LINE SHARING INTERCONNECTION

FILES INCLUDED IN OSS LINE SHARING COST STUDY

All Word Files.doc – This is the Word file that contains:

Executive Summary. Details the purpose of this study, a description of the elements included in this study, the methodology used to complete this study, the assumptions that were used in this study and a complete description of Total Element Long Run Incremental Costs.

Table of Contents for entire study.

Title page for study.

Read Me instructions to recreate study results.

SD OSS Line Sharing.xls – This is the Excel file that contains:

The pages containing the cost calculations for the OSS Line Sharing cost study and the output results from the following models:

Wholesale Cost Program – Version 2.07 The purpose of the Wholesale Cost Program is to develop the Total Element Long Run Incremental Costs of the Investments/Expenses to provide OSS for Line Sharing. The Wholesale Cost Model creates formulas for inflating and loading investments, along with formulas for applying annual cost factors to the investments and/or expenses.

Cost Factor Databases – Vintage 00SD02E (05/14/01)

Cost Factors Model (TELRIC) – Version 00V2 –

To generate the cost results found in this study, do as follows:

Go to the inputs tab in the SD OSS Line Sharing.xls file. Fill in the cells in red. These inputs will flow through to produce the costs found on page 3 of the cost study. (Note: State name must remain the same or the Wholesale Cost Program will have to be rerun.)

Subject:
2000 Line Sharing OSS Actuals
Date:
Tue, 03 Jul 2001 11:34:35 -0600
From:
Renee Albersheim <ralbers@uswest.com>
Organization:
Qwest Information Technologies
To:
Nancy Frazee <nfrazee@uswest.com>
CC:
John Curtis <jxcurt2@uswest.com> , Patricia Parker <paparke@uswest.com>

Nancy,

The actual costs for line sharing OSS in the year 2000 are as follows:

Direct Expense (incl. Telcordia contract)	11,900,000
IT Labor & Project Mgmt.	375,260
Total	12,275,260

Renee

--
Renee Albersheim
Qwest Corporation
IT Wholesale and Long Distance Entry
Staff Advocate Policy and Law
Work: 303-965-6325
Fax : 303-965-0301 or 303-896-8010

South Dakota Public Utilities Commission
Docket No. TC 01_____
Qwest Corporation

Attachment 5

Study No. 5417
Hi-Cap Unbundled Network Elements
(DS1/DS3 Capable Loops, DS1 Capable Feeder, Dark Fiber)

Qwest

EXECUTIVE SUMMARY

SOUTH DAKOTA
HICAP
UNBUNDLED NETWORK ELEMENTS

RECURRING COST STUDY #5417

USING COMMISSION PRESCRIBED 10.14% COM

JULY 2001

Economic Analyses
MSEA
For Informed Decisions

MARKET SERVICES AND ECONOMIC ANALYSIS ORGANIZATION

HICAP

UNBUNDLED NETWORK ELEMENTS

Table of Contents

Page	Section 1 – Study Output
1	Executive Summary

	Section 2 – Cost Calculations
6	Study Summary
7	Cost Results Summary
9	Total Products Costs
12	Investments Cost Calculations
19	WINPC3 Investments
24	WINPC3 Parameters
25	WINPC3 ACF Inputs
27	WINPC3 ACF Outputs

MSEA

A. PURPOSE, SCOPE, AND APPLICATION

The purpose of this study is to estimate QWEST's - 2001 total element long-run incremental costs that would be incurred to provide Hicap Unbundled Network Elements to a Co-Provider.

This study develops state wide average and deaveraged zone Total Element Long Run Incremental Costs (TELRIC). Costs are specific to the state of SOUTH DAKOTA and are stated on a per unit basis, unless specified otherwise. **Cost results are based on Commission Prescribed 10.14% Cost of Money (COM).**

B. DESCRIPTION OF SERVICE

A Unbundled Network Element (UNE) is a portion of QWEST's network sold to an Interconnector or Certified Local Exchange Carrier (CLEC) for use in building services for their customers. The Interconnector normally would connect to these UNEs in a QWEST wire center. The Interconnector may combine these UNEs together and/or with their own facilities or equipment for this purpose.

The Interconnector has design responsibility to insure that these elements will properly work with each other and with their facilities and equipment to meet their customer's service needs.

Several types of UNEs are available from QWEST. The following UNEs are addressed in this study:

- DS1 & DS3 Capable Loops
- DS1 Capable Feeder Loop
- Unbundled Dark Fiber Interoffice
- Unbundled Dark Fiber Loop

DS1 Capable Loop:
A digital transmission path that transports bi-directional DS1 signals with a nominal transmission rate of 1.544 Mbps. The transmission path runs between a QWEST Serving Wire Center (SWC) Network Interface (NI) to the End User (EU) NI located at the EU's designated premises within the serving area of the SWC. The interconnector gains access to these unbundled services at the QWEST SWC through established Collocation arrangements. See Technical Publication 77384 for additional information.

DS3 Capable Loop:
A digital transmission path that transports bi-directional DS3 signals with a nominal transmission rate of 44.736 Mbps The transmission path runs between a QWEST Serving Wire Center (SWC) Network Interface (NI) to the End User (EU) NI located at the EU's designated premises within the serving area of the SWC. DS3 Capable Loops will be configured as a channel on a fiber-based system. The interconnector gains access to these unbundled services at the QWEST SWC through established Collocation arrangements. See Technical Publication 77384 for additional information.

DS1 Capable Feeder Loop:
A digital transmission path that transports bi-directional DS1 signals with a nominal transmission rate of 1.544 Mbps. The transmission path runs between a QWEST Serving Wire Center (SWC) Network Interface (NI) to the Field Connection Point (FCP). DS1 Capable Loops will typically have one of the following configurations:

- Metallic-based span with High-Bit-Rate Digital Subscriber Line (HDSL) or T1 carrier equipment.
- Channel of a fiber-based system.
- Combination of both fiber and metallic-based facilities.

The interconnector gains access to these unbundled services at the QWEST SWC through established Collocation arrangements. See Technical Publication 77405 for additional information.

Unbundled Dark Fiber (UDF) Interoffice:
Provides a pair of interoffice optical fibers (i.e., two fibers) on which no electronic terminating equipment is provided by QWEST. The pairs go from wire center to wire center for interoffice applications. A CLEC must be collocated in all wire centers where UDF terminates. The fibers will be connected to a Fiber Distribution Panel (FDP) or functional equivalent in the wire centers. See Technical Publication 77383 for additional information.

Unbundled Dark Fiber (UDF) Loop:
Provides a pair of optical fibers (i.e., two fibers) on which no electronic terminating equipment is provided by QWEST. The pairs go from wire center to splice, FDP, or customer location for Loop applications. A CLEC must be collocated in all wire centers where UDF terminates. The fibers will be connected to a Fiber Distribution Panel (FDP) or functional equivalent in the wire centers or customer locations. Technical Publication 77383 for additional information.

Unbundled Dark Fiber (UDF) Termination:
Two fiber termination equipment (FDP) located at the SWC or customer location.

Unbundled Dark Fiber (UDF) Cross Connect:
Two fiber patch cords to connect FDP to FDP located at the SWC or customer location.

C. STUDY METHODOLOGY

DS1 / DS3 Capable Loop – Loop investments are calculated using a Microsoft Excel® spreadsheet based model called the NAC (Network Access Channel) model. The NAC model estimates the installed investment associated with circuits between a SWC and an End User's NI. Detailed description of this model can be found in the Integrated Cost Model (ICM) NAC documentation.

Unbundled Dark Fiber (UDF) Interoffice – The primary cost drivers are the investments for materials and corresponding installation and engineering labor costs. Installed Fiber and conduit investments from the Transport Model (TM) were weighted by a QWEST ratio of in place buried and underground sheath miles to determine an average investment per route mile. Detailed description of Transport Model can be found in the Integrated Cost Model (ICM) TM documentation. The Dark Fiber Model shows these investment results under the IOF Fiber tab.

Unbundled Dark Fiber (UDF) Loop – Average fiber loop investments are taken from the LOOPMOD Model. Detailed description of LOOPMOD Model can be found in the Integrated Cost Model (ICM) LOOPMOD documentation. The Dark Fiber Model shows these investment results under the Loopmod Investments tab.

Unbundled Dark Fiber (UDF) Termination & Cross-Connect – The primary cost drivers are the investments for materials and corresponding installation and engineering labor costs. Total Install Factors (TIF) and utilization factors are applied to the pertinent material investments to calculate the total installed investments. The Dark Fiber Model calculates these investments under the FDP and Fiber Xconnect tabs.

The TELRIC Windows Personal Computer Cost Calculator (WINPC3) was used to convert installed investments to TELRIC by applying appropriate investment and expense factors to the installed investment.

D. Description OF TOTAL ELEMENT LONG RUN INCREMENTAL COSTS

Total Element Long Run Incremental Cost (TELRIC) studies are performed by QWEST to estimate the economic cost of providing network elements. The QWEST TELRIC studies identify the forward-looking costs associated with the provision of the total quantity of a network element in the long run. The *forward-looking* QWEST TELRIC studies identify the costs that are likely to be incurred in the future, and consider the latest forward-looking technologies and methods of operation that are currently available. These studies are *not* embedded or historical, and do not measure the impact of prior investment decisions by the corporation. The QWEST TELRIC studies also identify the *long run* costs associated with providing a network element—reflecting a time period over which all inputs (including changes in the size of facilities, levels of investment, etc.) can be adjusted.

QWEST TELRIC studies identify recurring and nonrecurring costs. *Recurring costs* are the ongoing costs associated with providing a network element. Recurring costs are generally investment-related and include both capital costs and operating expenses. These costs are often presented as a cost per month or per unit of usage (e.g., minute of use) and are incurred throughout the time period the network element is provided to a customer. *Nonrecurring costs* are the one-time costs that are incurred at the time a customer establishes, disconnects or changes service. These costs normally result from a customer order, and are predominantly labor-related.

The QWEST recurring and nonrecurring TELRIC studies identify costs on a unitized basis and disaggregates the cost results into the following components:

Total Direct Costs are the forward-looking costs that are caused by offering the network element in the long run. These costs would not be incurred if the network elements were not offered. Total Direct Costs reflect the per-unit forward looking cost associated with providing the entire network element in the most efficient manner, holding constant the production of all other network elements produced by the firm. For recurring element costs Total Direct Costs include the capital costs (e.g., depreciation, return, taxes) and maintenance costs associated with the investment required to provision a network element, along with other network element-specific costs such as product management expense. For non-recurring costs, Total Direct Costs include the labor-related expenses associated with the provision of a network element, along with other network element-specific costs such as product management expense.

Directly Attributed Costs include network administration and engineering costs and various administrative costs such as the cost of general-purpose computers and accounting and finance expenses. These costs are not directly associated with a specific network element. However, these costs vary with the provision of all network elements, and are not common to the entire firm.

Total Element Long Run Incremental Costs (TELRIC) represent the sum of Total Direct Costs and Directly Attributed Costs. This measure of costs includes the forward-looking costs incurred in the provision of a network element. This measure of costs is consistent with TELRIC as defined by the FCC.

Common Costs are associated with the enterprise as a whole. These costs do vary based on the total size of the firm, but do not vary with the provisioning of individual network elements. These costs are avoidable only with the elimination of the entire firm, and are sometimes referred to as *general overhead costs.*

Fully Allocated Costs represent the sum of Total Element Long Run Incremental Cost plus Common Costs (TELRIC + CC).

E. STUDY ASSUMPTIONS

a. Costs are based on a forward-looking scorched node scenario and represent the cost of fully replacing the network required to provision the service, beginning from the existing locations of network nodes used by QWEST today.

b. Additional assumptions used in the NAC models may be found in the documentation of that model.

c. Cost results are based on Commission Prescribed 10.14% Cost of Money (COM).

RESULTS

State: South Dakota

Description	Loaded Investment	Total Direct	Network Support	Directly Attributed	TELRIC	Common	TELRIC + Common
DS1 Capable Loop Zone 1	$4,075.18	$66.43	$3.74	$15.74	$82.17	$3.71	$85.88
DS1 Capable Loop Zone 2	$4,189.06	$68.01	$3.83	$16.12	$84.13	$3.80	$87.93
DS1 Capable Loop Zone 3	$4,563.22	$73.58	$4.14	$17.44	$91.02	$4.11	$95.13
DS1 Capable Loop State Avg.	$4,340.98	$70.31	$3.95	$16.66	$86.97	$3.93	$90.89
DS1 Capable Feeder Loop Zone 1	$3,662.02	$59.35	$3.34	$14.06	$73.41	$3.32	$76.73
DS1 Capable Feeder Loop Zone 2	$3,775.90	$60.93	$3.43	$14.44	$75.37	$3.40	$78.77
DS1 Capable Feeder Loop Zone 3	$4,150.07	$66.50	$3.74	$15.76	$82.26	$3.72	$85.98
DS1 Capable Feeder Loop State Avg.	$3,927.83	$63.23	$3.56	$14.98	$78.21	$3.53	$81.74
DS3 Capable Loop Zone 1	$46,370.11	$740.86	$41.67	$175.55	$916.41	$41.39	$957.81
DS3 Capable Loop Zone 2	$49,061.41	$777.96	$43.76	$184.34	$962.29	$43.47	$1,005.76
DS3 Capable Loop Zone 3	$59,758.48	$929.29	$52.27	$220.20	$1,149.49	$51.92	$1,201.41
DS3 Capable Loop State Avg.	$53,568.88	$842.02	$47.36	$199.52	$1,041.54	$47.05	$1,088.59
INTEROFFICE DARK FIBER - PER ROUTE MILE	$4,105.71	$55.12	$3.10	$13.06	$68.18	$3.08	$71.26
2 Fiber Termination - InterOffice	$373.80	$6.19	$0.35	$1.47	$7.65	$0.35	$8.00
2 Fiber Cross Connection	$207.55	$3.43	$0.19	$0.81	$4.25	$0.19	$4.44
UNBUNDLED DARK FIBER LOOP - PER 2 FIBER LOOP	$10,208.06	$137.22	$7.72	$32.51	$169.74	$7.67	$177.40
2 Fiber Loop Termination, per termination at wire center	$397.16	$6.57	$0.37	$1.56	$8.13	$0.37	$8.50
2 Fiber Loop Termination, per termination at premises	$329.79	$5.51	$0.31	$1.30	$6.81	$0.31	$7.12
EXTENDED UNBUNDLED DARK FIBER (E-UDF)	$10,208.06	$137.22	$7.72	$32.51	$169.74	$7.67	$177.40
2 Fiber Loop Termination, per termination at wire center	$397.16	$6.57	$0.37	$1.56	$8.13	$0.37	$8.50
2 Fiber Loop Termination, per termination at premises	$329.79	$5.51	$0.31	$1.30	$6.81	$0.31	$7.12

Study Name	*Hicap Unbundled Network Elements*	
Study Requester	*Gollehon*	
Type of Study	*TELRIC*	
Study ID	*5417*	
Cost Factor Group	*Interconnection*	
	DS1/DS3 Capable loop	
	DS1 Capable Feeder loop	
	Dark Fiber	
Study Applications	*pricing*	
Completion Date	*July 19, 2001*	
Cost Analyst	*Susan DeVries*	
Study Review	**Reviewer**	**Date**
	Gollehon	*July 19, 2001*
Models Used	**Model**	**Version**
	DS1 NAC MODEL	*DS1V0601ZONES*
	DS3 NAC MODEL	*DS3V0601ZONES*
	Wholesale Cost Program	*2.07*
	Cost Factor Databases	*00SD02E*
	Cost Factors Model (TELRIC)	*00V2*
	Dark Fiber Idaho	
Cost Factors Used	**Factor**	**Effective Date**
	Capital Recovery	*01/01*
	Maintenance	*01/01*
	Ad Valorem	*01/01*
	COE Land & Bldg	*01/01*
	Directly Assigned Factors	*01/01*
	Billing & Collection (PL)	*01/01*
	Directly Attributable Factors	*01/01*
	Common	*01/01*
	Cost Of Money	*10.14%*
Inflation		
Major Cost Drivers	*circuit eqpt*	

Parameter File: J:\Recurring\DeVries-Williams\SD\SD HICAP UNE Workpapers study#5417.xls, Sheet "WINPC3 Parameters"
State(s): SD
Database Vintage: 00SD02E
Factors For: Interconnection
Report Type: ICM Format
Decimal Places: 2
Costs Format: Monthly
Group Totals: Yes
ACF Input: J:\Recurring\DeVries-Williams\SD\SD HICAP UNE Workpapers study#5417.xls, Sheet "WINPC3 ACF Inputs"
ACF Output: J:\Recurring\DeVries-Williams\SD\SD HICAP UNE Workpapers study#5417.xls, Sheet "WINPC3 ACF Outputs"
Investment: J:\Recurring\DeVries-Williams\SD\SD HICAP UNE Workpapers study#5417.xls, Sheet "WINPC3 Investments"
Output: J:\Recurring\DeVries-Williams\SD\SD HICAP UNE Workpapers study#5417.xls, Sheet "WINPC3 Output"

[redacted]

State: South Dakota

Description	Loaded Investment	Total Direct	Network Support	Directly Attributed	TELRIC	Common	TELRIC + Common
DS1 Capable Loop Zone 1	$4,075.18	$66.43	$3.74	$15.74	$82.17	$3.71	$85.88
DS1 Capable Loop Zone 2	$4,189.06	$68.01	$3.83	$16.12	$84.13	$3.80	$87.93
DS1 Capable Loop Zone 3	$4,563.22	$73.58	$4.14	$17.44	$91.02	$4.11	$95.13
DS1 Capable Loop State Avg.	$4,340.98	$70.31	$3.95	$16.66	$86.97	$3.93	$90.89
DS1 Capable Feeder Loop Zone 1	$3,662.02	$59.35	$3.34	$14.06	$73.41	$3.32	$76.73
DS1 Capable Feeder Loop Zone 2	$3,775.90	$60.93	$3.43	$14.44	$75.37	$3.40	$78.77
DS1 Capable Feeder Loop Zone 3	$4,150.07	$66.50	$3.74	$15.76	$82.26	$3.72	$85.98
DS1 Capable Feeder Loop State Avg.	$3,927.83	$63.23	$3.56	$14.98	$78.21	$3.53	$81.74
DS3 Capable Loop Zone 1	$46,370.11	$740.86	$41.67	$175.55	$916.41	$41.39	$957.81
DS3 Capable Loop Zone 2	$49,061.41	$777.96	$43.76	$184.34	$962.29	$43.47	$1,005.76
DS3 Capable Loop Zone 3	$59,758.48	$929.29	$52.27	$220.20	$1,149.49	$51.92	$1,201.41
DS3 Capable Loop State Avg.	$53,568.88	$842.02	$47.36	$199.52	$1,041.54	$47.05	$1,088.59
INTEROFFICE DARK FIBER - PER ROUTE MILE	$4,105.71	$55.12	$3.10	$13.06	$68.18	$3.08	$71.26
2 Fiber Termination - InterOffice	$373.80	$6.19	$0.35	$1.47	$7.65	$0.35	$8.00
2 Fiber Cross Connection	$207.55	$3.43	$0.19	$0.81	$4.25	$0.19	$4.44
UNBUNDLED DARK FIBER LOOP - PER 2 FIBER LOOP	$10,208.06	$137.22	$7.72	$32.51	$169.74	$7.67	$177.40
2 Fiber Loop Termination, per termination at wire center	$397.16	$6.57	$0.37	$1.56	$8.13	$0.37	$8.50
2 Fiber Loop Termination, per termination at premises	$329.79	$5.51	$0.31	$1.30	$6.81	$0.31	$7.12
EXTENDED UNBUNDLED DARK FIBER (E-UDF)	$10,208.06	$137.22	$7.72	$32.51	$169.74	$7.67	$177.40
2 Fiber Loop Termination, per termination at wire center	$397.16	$6.57	$0.37	$1.56	$8.13	$0.37	$8.50
2 Fiber Loop Termination, per termination at premises	$329.79	$5.51	$0.31	$1.30	$6.81	$0.31	$7.12

	7/19/01 3:56 PM								
Row	South Dakota	Source or Calculation	Factor Value	DS1 Capable Loop Zone 1	DS1 Capable Loop Zone 2	DS1 Capable Loop Zone 3	DS1 Capable Loop State Avg.	DS1 Capable Feeder Loop Zone 1	DS1 Capable Feeder Loop Zone 2
			A	B	C	D	E	F	G
1	**Investment**	sl r"Total" cD		4,075.18	4,189.06	4,563.22	4,340.98	3,662.02	3,775.90
2									
3	***Investment Based Costs***	***sl r"Total" cK***		63.79	65.31	70.66	67.51	56.99	58.51
4									
5	Direct Expenses			0.00	0.00	0.00	0.00	0.00	0.00
6	Miscellaneous Expenses			0.00	0.00	0.00	0.00	0.00	0.00
7	Billing & Collection - PL	cA*(r8-r6)	0.004304	0.27	0.28	0.30	0.29	0.25	0.25
8	***Investment Based + Direct Costs***			64.07	65.59	70.97	67.81	57.24	58.76
9									
10	***Directly Assigned***								
11	Product Management Expense	cA*(r8-r6)	0.025565	1.64	1.68	1.81	1.73	1.46	1.50
12	Sales Expense	cA*(r8-r6)	0.009225	0.59	0.61	0.65	0.63	0.53	0.54
13	Product Advertising Expense	cA*(r8-r6)	0.000000	0.00	0.00	0.00	0.00	0.00	0.00
14	Business Fees (Other Operating Taxes)	cA*(Sum(r8:r13)-r6)	0.002025	0.13	0.14	0.15	0.14	0.12	0.12
15	***Directly Assigned Costs***	***Sum r11:r14***		2.36	2.42	2.62	2.50	2.11	2.17
16									
17	***Total Direct Costs***	***r8 + r15***		66.43	68.01	73.58	70.31	59.35	60.93
18									
19	***Directly Attributed***								
20	Network Operations	cA*(r17-r6)	0.040880	2.72	2.78	3.01	2.87	2.43	2.49
21	Network Support Assets	cA*(r17-r6)	0.015364	1.02	1.04	1.13	1.08	0.91	0.94
22	General Support Assets	cA*(r17-r6)	0.069508	4.62	4.73	5.11	4.89	4.13	4.24
23	General Purpose Computers	cA*(r17-r6)	0.034714	2.31	2.36	2.55	2.44	2.06	2.12
24	Uncollectible	cA*(r17-r6)	0.000401	0.03	0.03	0.03	0.03	0.02	0.02
25	Accounting & Finance Expense	cA*(r17-r6)	0.008839	0.59	0.60	0.65	0.62	0.52	0.54
26	Human Resources Expense	cA*(r17-r6)	0.008145	0.54	0.55	0.60	0.57	0.48	0.50
27	Information Management Expense	cA*(r17-r6)	0.057009	3.79	3.88	4.19	4.01	3.38	3.47
28	Intangibles	cA*(r17-r6)	0.002091	0.14	0.14	0.15	0.15	0.12	0.13
29	***Directly Attributed Costs***	***Sum r20:r28***		15.74	16.12	17.44	16.66	14.06	14.44
30									
31	***TELRIC***	***r17 + r29***		82.17	84.13	91.02	86.97	73.41	75.37
32									
33	***Common***								
34	Executive Expense	cA*(r31-r6)	0.007805	0.64	0.66	0.71	0.68	0.57	0.59
35	Planning Expense	cA*(r31-r6)	0.000580	0.05	0.05	0.05	0.05	0.04	0.04
36	External Relations Expense	cA*(r31-r6)	0.013029	1.07	1.10	1.19	1.13	0.96	0.98
37	Legal Expense	cA*(r31-r6)	0.006148	0.51	0.52	0.56	0.53	0.45	0.46
38	Other Procurement Expense	cA*(r31-r6)	0.002359	0.19	0.20	0.21	0.21	0.17	0.18
39	Research & Development Expense	cA*(r31-r6)	0.000036	0.00	0.00	0.00	0.00	0.00	0.00
40	Other General and Admin Expense	cA*(r31-r6)	0.015212	1.25	1.28	1.38	1.32	1.12	1.15
41	***Common Costs***	***Sum r34:r40***		3.71	3.80	4.11	3.93	3.32	3.40
42									
43	***TELRIC + Common Costs***	***r31 + r41***		85.88	87.93	95.13	90.89	76.73	78.77

	7/19/01 3:56 PM								
Row	South Dakota	Source or Calculation	Factor Value	DS1 Capable Feeder Loop Zone 3	DS1 Capable Feeder Loop State Avg.	DS3 Capable Loop Zone 1	DS3 Capable Loop Zone 2	DS3 Capable Loop Zone 3	DS3 Capable Loop State Avg.
			A	H	I	J	K	L	M
1	Investment	sl r"Total" cD		4,150.07	3,927.83	46,370.11	49,061.41	59,758.48	53,568.88
2									
3	***Investment Based Costs***	***sl r"Total" cK***		63.86	60.71	711.45	747.07	892.39	808.59
4									
5	Direct Expenses			0.00	0.00	0.00	0.00	0.00	0.00
6	Miscellaneous Expenses			0.00	0.00	0.00	0.00	0.00	0.00
7	Billing & Collection - PL	cA*(r8-r6)	0.004304	0.27	0.26	3.06	3.22	3.84	3.48
8	***Investment Based + Direct Costs***			64.14	60.98	714.51	750.28	896.23	812.07
9									
10	***Directly Assigned***								
11	Product Management Expense	cA*(r8-r6)	0.025565	1.64	1.56	18.27	19.18	22.91	20.76
12	Sales Expense	cA*(r8-r6)	0.009225	0.59	0.56	6.59	6.92	8.27	7.49
13	Product Advertising Expense	cA*(r8-r6)	0.000000	0.00	0.00	0.00	0.00	0.00	0.00
14	Business Fees (Other Operating Taxes)	cA*(Sum(r8:r13)-r6)	0.002025	0.13	0.13	1.50	1.57	1.88	1.70
15	***Directly Assigned Costs***	***Sum r11:r14***		2.37	2.25	26.35	27.67	33.06	29.95
16									
17	***Total Direct Costs***	***r8 + r15***		66.50	63.23	740.86	777.96	929.29	842.02
18									
19	***Directly Attributed***								
20	Network Operations	cA*(r17-r6)	0.040880	2.72	2.58	30.29	31.80	37.99	34.42
21	Network Support Assets	cA*(r17-r6)	0.015364	1.02	0.97	11.38	11.95	14.28	12.94
22	General Support Assets	cA*(r17-r6)	0.069508	4.62	4.39	51.50	54.07	64.59	58.53
23	General Purpose Computers	cA*(r17-r6)	0.034714	2.31	2.19	25.72	27.01	32.26	29.23
24	Uncollectible	cA*(r17-r6)	0.000401	0.03	0.03	0.30	0.31	0.37	0.34
25	Accounting & Finance Expense	cA*(r17-r6)	0.008839	0.59	0.56	6.55	6.88	8.21	7.44
26	Human Resources Expense	cA*(r17-r6)	0.008145	0.54	0.51	6.03	6.34	7.57	6.86
27	Information Management Expense	cA*(r17-r6)	0.057009	3.79	3.60	42.24	44.35	52.98	48.00
28	Intangibles	cA*(r17-r6)	0.002091	0.14	0.13	1.55	1.63	1.94	1.76
29	***Directly Attributed Costs***	***Sum r20:r28***		15.76	14.98	175.55	184.34	220.20	199.52
30									
31	***TELRIC***	***r17 + r29***		82.26	78.21	916.41	962.29	1,149.49	1,041.54
32									
33	***Common***								
34	Executive Expense	cA*(r31-r6)	0.007805	0.64	0.61	7.15	7.51	8.97	8.13
35	Planning Expense	cA*(r31-r6)	0.000580	0.05	0.05	0.53	0.56	0.67	0.60
36	External Relations Expense	cA*(r31-r6)	0.013029	1.07	1.02	11.94	12.54	14.98	13.57
37	Legal Expense	cA*(r31-r6)	0.006148	0.51	0.48	5.63	5.92	7.07	6.40
38	Other Procurement Expense	cA*(r31-r6)	0.002359	0.19	0.18	2.16	2.27	2.71	2.46
39	Research & Development Expense	cA*(r31-r6)	0.000036	0.00	0.00	0.03	0.03	0.04	0.04
40	Other General and Admin Expense	cA*(r31-r6)	0.015212	1.25	1.19	13.94	14.64	17.49	15.84
41	***Common Costs***	***Sum r34:r40***		3.72	3.53	41.39	43.47	51.92	47.05
42									
43	***TELRIC + Common Costs***	***r31 + r41***		85.98	81.74	957.81	1,005.76	1,201.41	1,088.59

	7/19/01 3:56 PM								
Row	South Dakota	Source or Calculation	Factor Value	INTEROFFICE DARK FIBER - PER ROUTE MILE	2 Fiber Termination - InterOffice	2 Fiber Cross Connection	UNBUNDLED DARK FIBER LOOP - PER 2 FIBER LOOP	2 Fiber Loop Termination, per termination at wire center	2 Fiber Loop Termination, per termination at premises
			A	N	O	P	Q	R	S
1	Investment	sl r"Total" cD		4,105.71	373.80	207.55	10,208.06	397.16	329.79
2									
3	***Investment Based Costs***	***sl r"Total" cK***		52.93	5.94	3.30	131.77	6.31	5.29
4									
5	Direct Expenses			0.00	0.00	0.00	0.00	0.00	0.00
6	Miscellaneous Expenses			0.00	0.00	0.00	0.00	0.00	0.00
7	Billing & Collection - PL	cA*(r8-r6)	0.004304	0.23	0.03	0.01	0.57	0.03	0.02
8	***Investment Based + Direct Costs***			53.16	5.97	3.31	132.34	6.34	5.31
9									
10	***Directly Assigned***								
11	Product Management Expense	cA*(r8-r6)	0.025565	1.36	0.15	0.08	3.38	0.16	0.14
12	Sales Expense	cA*(r8-r6)	0.009225	0.49	0.06	0.03	1.22	0.06	0.05
13	Product Advertising Expense	cA*(r8-r6)	0.000000	0.00	0.00	0.00	0.00	0.00	0.00
14	Business Fees (Other Operating Taxes)	cA*(Sum(r8:r13)-r6)	0.002025	0.11	0.01	0.01	0.28	0.01	0.01
15	***Directly Assigned Costs***	***Sum r11:r14***		1.96	0.22	0.12	4.88	0.23	0.20
16									
17	***Total Direct Costs***	***r8 + r15***		55.12	6.19	3.43	137.22	6.57	5.51
18									
19	***Directly Attributed***								
20	Network Operations	cA*(r17-r6)	0.040880	2.25	0.25	0.14	5.61	0.27	0.23
21	Network Support Assets	cA*(r17-r6)	0.015364	0.85	0.10	0.05	2.11	0.10	0.08
22	General Support Assets	cA*(r17-r6)	0.069508	3.83	0.43	0.24	9.54	0.46	0.38
23	General Purpose Computers	cA*(r17-r6)	0.034714	1.91	0.21	0.12	4.76	0.23	0.19
24	Uncollectible	cA*(r17-r6)	0.000401	0.02	0.00	0.00	0.06	0.00	0.00
25	Accounting & Finance Expense	cA*(r17-r6)	0.008839	0.49	0.05	0.03	1.21	0.06	0.05
26	Human Resources Expense	cA*(r17-r6)	0.008145	0.45	0.05	0.03	1.12	0.05	0.04
27	Information Management Expense	cA*(r17-r6)	0.057009	3.14	0.35	0.20	7.82	0.37	0.31
28	Intangibles	cA*(r17-r6)	0.002091	0.12	0.01	0.01	0.29	0.01	0.01
29	***Directly Attributed Costs***	***Sum r20:r28***		13.06	1.47	0.81	32.51	1.56	1.30
30									
31	***TELRIC***	***r17 + r29***		68.18	7.65	4.25	169.74	8.13	6.81
32									
33	***Common***								
34	Executive Expense	cA*(r31-r6)	0.007805	0.53	0.06	0.03	1.32	0.06	0.05
35	Planning Expense	cA*(r31-r6)	0.000580	0.04	0.00	0.00	0.10	0.00	0.00
36	External Relations Expense	cA*(r31-r6)	0.013029	0.89	0.10	0.06	2.21	0.11	0.09
37	Legal Expense	cA*(r31-r6)	0.006148	0.42	0.05	0.03	1.04	0.05	0.04
38	Other Procurement Expense	cA*(r31-r6)	0.002359	0.16	0.02	0.01	0.40	0.02	0.02
39	Research & Development Expense	cA*(r31-r6)	0.000036	0.00	0.00	0.00	0.01	0.00	0.00
40	Other General and Admin Expense	cA*(r31-r6)	0.015212	1.04	0.12	0.06	2.58	0.12	0.10
41	***Common Costs***	***Sum r34:r40***		3.08	0.35	0.19	7.67	0.37	0.31
42									
43	***TELRIC + Common Costs***	***r31 + r41***		71.26	8.00	4.44	177.40	8.50	7.12

Row	7/19/01 3:56 PM South Dakota	Source or Calculation	Factor Value	EXTENDED UNBUNDLED DARK FIBER (E-UDF)	2 Fiber Loop Termination, per termination at wire center	2 Fiber Loop Termination, per termination at premises
			A	T	U	V
1	**Investment**	sl r"Total" cD		10,208.06	397.16	329.79
2						
3	***Investment Based Costs***	***sl r"Total" cK***		131.77	6.31	5.29
4						
5	Direct Expenses			0.00	0.00	0.00
6	Miscellaneous Expenses			0.00	0.00	0.00
7	Billing & Collection - PL	cA*(r8-r6)	0.004304	0.57	0.03	0.02
8	***Investment Based + Direct Costs***			132.34	6.34	5.31
9						
10	***Directly Assigned***					
11	Product Management Expense	cA*(r8-r6)	0.025565	3.38	0.16	0.14
12	Sales Expense	cA*(r8-r6)	0.009225	1.22	0.06	0.05
13	Product Advertising Expense	cA*(r8-r6)	0.000000	0.00	0.00	0.00
14	Business Fees (Other Operating Taxes)	cA*(Sum(r8:r13)-r6)	0.002025	0.28	0.01	0.01
15	***Directly Assigned Costs***	***Sum r11:r14***		4.88	0.23	0.20
16						
17	***Total Direct Costs***	***r8 + r15***		137.22	6.57	5.51
18						
19	***Directly Attributed***					
20	Network Operations	cA*(r17-r6)	0.040880	5.61	0.27	0.23
21	Network Support Assets	cA*(r17-r6)	0.015364	2.11	0.10	0.08
22	General Support Assets	cA*(r17-r6)	0.069508	9.54	0.46	0.38
23	General Purpose Computers	cA*(r17-r6)	0.034714	4.76	0.23	0.19
24	Uncollectible	cA*(r17-r6)	0.000401	0.06	0.00	0.00
25	Accounting & Finance Expense	cA*(r17-r6)	0.008839	1.21	0.06	0.05
26	Human Resources Expense	cA*(r17-r6)	0.008145	1.12	0.05	0.04
27	Information Management Expense	cA*(r17-r6)	0.057009	7.82	0.37	0.31
28	Intangibles	cA*(r17-r6)	0.002091	0.29	0.01	0.01
29	***Directly Attributed Costs***	***Sum r20:r28***		32.51	1.56	1.30
30						
31	***TELRIC***	***r17 + r29***		169.74	8.13	6.81
32						
33	***Common***					
34	Executive Expense	cA*(r31-r6)	0.007805	1.32	0.06	0.05
35	Planning Expense	cA*(r31-r6)	0.000580	0.10	0.00	0.00
36	External Relations Expense	cA*(r31-r6)	0.013029	2.21	0.11	0.09
37	Legal Expense	cA*(r31-r6)	0.006148	1.04	0.05	0.04
38	Other Procurement Expense	cA*(r31-r6)	0.002359	0.40	0.02	0.02
39	Research & Development Expense	cA*(r31-r6)	0.000036	0.01	0.00	0.00
40	Other General and Admin Expense	cA*(r31-r6)	0.015212	2.58	0.12	0.10
41	***Common Costs***	***Sum r34:r40***		7.67	0.37	0.31
42						
43	***TELRIC + Common Costs***	***r31 + r41***		177.40	8.50	7.12

7/19/01
South Dakota

Hicap Unbundled Network Elements

DS1 Capable Loop Zone 1

Acct	FRC	Account Name	Investment	Depreciation	Cost Of Money	Income Tax	Ad Valorem	Maintenance	Switch RTU	Total Capital Costs
2232.3	357C	Circuit Equipment - Other Digital Equipment	294.54	2.69	1.12	0.42	0.21	0.80	0.00	5.24
2232.2	257C	Circuit Equipment - Pair Gain - Digital	673.32	6.16	2.55	0.96	0.48	0.64	0.00	10.80
2232.2	257CP	Pair Gain - Digital (Customer Premise)	791.26	7.23	3.00	1.13	0.57	0.75	0.00	12.69
2232.2	257CS	Subscriber Pair Gain Equipment (SONET)	509.58	4.66	1.93	0.73	0.37	0.48	0.00	8.17
2232.2	257CSP	Subscriber Pair Gain (SONET - Customer Prem	676.48	6.19	2.56	0.97	0.49	0.64	0.00	10.85
2411	1C	Poles	6.25	0.06	0.02	0.01	0.00	0.02	0.00	0.11
2431	3C	Aerial Wire	0.30	0.01	0.00	0.00	0.00	0.00	0.00	0.01
2441	4C	Conduit System	262.61	0.47	1.41	0.53	0.19	0.12	0.00	2.73
2422.11,.21	5C	Underground Cable - Metallic	133.74	1.01	0.63	0.24	0.10	0.27	0.00	2.24
2423.11	35C	Buried Cable - Drop	23.84	0.12	0.11	0.04	0.02	0.09	0.00	0.39
2421.11	42C	Aerial Cable - Drop	4.22	0.04	0.02	0.01	0.00	0.05	0.00	0.11
2423.11,.21	45C	Buried Cable - Metallic	292.38	1.48	1.39	0.53	0.21	1.16	0.00	4.77
2421.11,.21	52C	Aerial Cable - Metallic	11.82	0.10	0.05	0.02	0.01	0.13	0.00	0.32
2426.1	62C	Intrabuilding Network Cable - Metallic	65.28	0.34	0.32	0.12	0.05	0.13	0.00	0.95
2422.12,.22	85C	Underground Cable - NonMetallic	90.18	0.53	0.43	0.16	0.06	0.05	0.00	1.24
2423.12,.22	845C	Buried Cable - NonMetallic	155.69	0.79	0.74	0.28	0.11	0.15	0.00	2.07
2426.2	862C	Intrabuilding Network Cable - NonMetallic	2.43	0.01	0.01	0.00	0.00	0.00	0.00	0.03
2111	20C	Land	2.07	0.00	0.02	0.01	0.00	0.00		0.03
2121	110C	Building	79.19	0.17	0.49	0.19	0.06	0.15		1.06
		Total	**4,075.18**	**32.07**	**16.80**	**6.35**	**2.92**	**5.64**	**0.00**	**63.79**

DS1 Capable Loop Zone 2

2232.3	357C	Circuit Equipment - Other Digital Equipment	294.54	2.69	1.12	0.42	0.21	0.80	0.00	5.24
2232.2	257C	Circuit Equipment - Pair Gain - Digital	673.32	6.16	2.55	0.96	0.48	0.64	0.00	10.80
2232.2	257CP	Pair Gain - Digital (Customer Premise)	791.26	7.23	3.00	1.13	0.57	0.75	0.00	12.69
2232.2	257CS	Subscriber Pair Gain Equipment (SONET)	509.58	4.66	1.93	0.73	0.37	0.48	0.00	8.17
2232.2	257CSP	Subscriber Pair Gain (SONET - Customer Prem	676.48	6.19	2.56	0.97	0.49	0.64	0.00	10.85
2411	1C	Poles	6.25	0.06	0.02	0.01	0.00	0.02	0.00	0.11
2431	3C	Aerial Wire	0.30	0.01	0.00	0.00	0.00	0.00	0.00	0.01
2441	4C	Conduit System	266.82	0.48	1.44	0.54	0.19	0.12	0.00	2.77
2422.11,.21	5C	Underground Cable - Metallic	135.41	1.03	0.63	0.24	0.10	0.27	0.00	2.27
2423.11	35C	Buried Cable - Drop	23.84	0.12	0.11	0.04	0.02	0.09	0.00	0.39
2421.11	42C	Aerial Cable - Drop	4.22	0.04	0.02	0.01	0.00	0.05	0.00	0.11
2423.11,.21	45C	Buried Cable - Metallic	296.12	1.50	1.41	0.53	0.21	1.18	0.00	4.83
2421.11,.21	52C	Aerial Cable - Metallic	11.82	0.10	0.05	0.02	0.01	0.13	0.00	0.32
2426.1	62C	Intrabuilding Network Cable - Metallic	65.28	0.34	0.32	0.12	0.05	0.13	0.00	0.95
2422.12,.22	85C	Underground Cable - NonMetallic	97.32	0.57	0.46	0.17	0.07	0.06	0.00	1.33
2423.12,.22	845C	Buried Cable - NonMetallic	252.82	1.28	1.20	0.45	0.18	0.24	0.00	3.36
2426.2	862C	Intrabuilding Network Cable - NonMetallic	2.43	0.01	0.01	0.00	0.00	0.00	0.00	0.03
2111	20C	Land	2.07	0.00	0.02	0.01	0.00	0.00		0.03

7/19/01
South Dakota

Hicap Unbundled Network Elements

Acct	FRC	Account Name	Investment	Depreciation	Cost Of Money	Income Tax	Ad Valorem	Maintenance	Switch RTU	Total Capital Costs
2121	110C	Building	79.19	0.17	0.49	0.19	0.06	0.15		1.06
		Total	**4,189.06**	**32.65**	**17.34**	**6.56**	**3.01**	**5.76**	**0.00**	**65.31**

DS1 Capable Loop Zone 3

2232.3	357C	Circuit Equipment - Other Digital Equipment	294.54	2.69	1.12	0.42	0.21	0.80	0.00	5.24
2232.2	257C	Circuit Equipment - Pair Gain - Digital	673.32	6.16	2.55	0.96	0.48	0.64	0.00	10.80
2232.2	257CP	Pair Gain - Digital (Customer Premise)	791.26	7.23	3.00	1.13	0.57	0.75	0.00	12.69
2232.2	257CS	Subscriber Pair Gain Equipment (SONET)	509.58	4.66	1.93	0.73	0.37	0.48	0.00	8.17
2232.2	257CSP	Subscriber Pair Gain (SONET - Customer Prem	676.48	6.19	2.56	0.97	0.49	0.64	0.00	10.85
2411	1C	Poles	6.25	0.06	0.02	0.01	0.00	0.02	0.00	0.11
2431	3C	Aerial Wire	0.30	0.01	0.00	0.00	0.00	0.00	0.00	0.01
2441	4C	Conduit System	149.09	0.27	0.80	0.30	0.11	0.07	0.00	1.55
2422.11,.21	5C	Underground Cable - Metallic	82.94	0.63	0.39	0.15	0.06	0.17	0.00	1.39
2423.11	35C	Buried Cable - Drop	23.84	0.12	0.11	0.04	0.02	0.09	0.00	0.39
2421.11	42C	Aerial Cable - Drop	4.22	0.04	0.02	0.01	0.00	0.05	0.00	0.11
2423.11,.21	45C	Buried Cable - Metallic	369.31	1.87	1.76	0.66	0.27	1.47	0.00	6.03
2421.11,.21	52C	Aerial Cable - Metallic	11.82	0.10	0.05	0.02	0.01	0.13	0.00	0.32
2426.1	62C	Intrabuilding Network Cable - Metallic	65.28	0.34	0.32	0.12	0.05	0.13	0.00	0.95
2422.12,.22	85C	Underground Cable - NonMetallic	93.74	0.55	0.44	0.17	0.07	0.06	0.00	1.28
2423.12,.22	845C	Buried Cable - NonMetallic	727.57	3.69	3.46	1.31	0.52	0.68	0.00	9.67
2426.2	862C	Intrabuilding Network Cable - NonMetallic	2.43	0.01	0.01	0.00	0.00	0.00	0.00	0.03
2111	20C	Land	2.07	0.00	0.02	0.01	0.00	0.00		0.03
2121	110C	Building	79.19	0.17	0.49	0.19	0.06	0.15		1.06
		Total	**4,563.22**	**34.80**	**19.05**	**7.20**	**3.28**	**6.33**	**0.00**	**70.66**

DS1 Capable Loop State Avg.

2232.3	357C	Circuit Equipment - Other Digital Equipment	294.54	2.69	1.12	0.42	0.21	0.80	0.00	5.24
2232.2	257C	Circuit Equipment - Pair Gain - Digital	673.32	6.16	2.55	0.96	0.48	0.64	0.00	10.80
2232.2	257CP	Pair Gain - Digital (Customer Premise)	791.26	7.23	3.00	1.13	0.57	0.75	0.00	12.69
2232.2	257CS	Subscriber Pair Gain Equipment (SONET)	509.58	4.66	1.93	0.73	0.37	0.48	0.00	8.17
2232.2	257CSP	Subscriber Pair Gain (SONET - Customer Prem	676.48	6.19	2.56	0.97	0.49	0.64	0.00	10.85
2411	1C	Poles	6.25	0.06	0.02	0.01	0.00	0.02	0.00	0.11
2431	3C	Aerial Wire	0.30	0.01	0.00	0.00	0.00	0.00	0.00	0.01
2441	4C	Conduit System	207.36	0.37	1.12	0.42	0.15	0.10	0.00	2.15
2422.11,.21	5C	Underground Cable - Metallic	109.09	0.83	0.51	0.19	0.08	0.22	0.00	1.83
2423.11	35C	Buried Cable - Drop	23.84	0.12	0.11	0.04	0.02	0.09	0.00	0.39
2421.11	42C	Aerial Cable - Drop	4.22	0.04	0.02	0.01	0.00	0.05	0.00	0.11
2423.11,.21	45C	Buried Cable - Metallic	330.95	1.68	1.57	0.60	0.24	1.32	0.00	5.40
2421.11,.21	52C	Aerial Cable - Metallic	11.82	0.10	0.05	0.02	0.01	0.13	0.00	0.32
2426.1	62C	Intrabuilding Network Cable - Metallic	65.28	0.34	0.32	0.12	0.05	0.13	0.00	0.95
2422.12,.22	85C	Underground Cable - NonMetallic	93.37	0.55	0.44	0.17	0.07	0.06	0.00	1.28
2423.12,.22	845C	Buried Cable - NonMetallic	459.63	2.33	2.19	0.83	0.33	0.43	0.00	6.11
2426.2	862C	Intrabuilding Network Cable - NonMetallic	2.43	0.01	0.01	0.00	0.00	0.00	0.00	0.03

7/19/01
South Dakota

Hicap Unbundled Network Elements

Acct	FRC	Account Name	Investment	Depreciation	Cost Of Money	Income Tax	Ad Valorem	Maintenance	Switch RTU	Total Capital Costs
2111	20C	Land	2.07	0.00	0.02	0.01	0.00	0.00		0.03
2121	110C	Building	79.19	0.17	0.49	0.19	0.06	0.15		1.06
		Total	**4,340.98**	**33.54**	**18.03**	**6.82**	**3.12**	**6.01**	**0.00**	**67.51**

DS1 Capable Feeder Loop Zone 1

2232.3	357C	Circuit Equipment - Other Digital Equipment	294.54	2.69	1.12	0.42	0.21	0.80	0.00	5.24
2232.2	257C	Circuit Equipment - Pair Gain - Digital	673.32	6.16	2.55	0.96	0.48	0.64	0.00	10.80
2232.2	257CP	Pair Gain - Digital (Customer Premise)	791.26	7.23	3.00	1.13	0.57	0.75	0.00	12.69
2232.2	257CS	Subscriber Pair Gain Equipment (SONET)	509.58	4.66	1.93	0.73	0.37	0.48	0.00	8.17
2232.2	257CSP	Subscriber Pair Gain (SONET - Customer Prem	676.48	6.19	2.56	0.97	0.49	0.64	0.00	10.85
2441	4C	Conduit System	262.61	0.47	1.41	0.53	0.19	0.12	0.00	2.73
2422.11,.21	5C	Underground Cable - Metallic	112.23	0.85	0.53	0.20	0.08	0.23	0.00	1.88
2423.11,.21	45C	Buried Cable - Metallic	20.23	0.10	0.10	0.04	0.01	0.08	0.00	0.33
2422.12,.22	85C	Underground Cable - NonMetallic	84.82	0.50	0.40	0.15	0.06	0.05	0.00	1.16
2423.12,.22	845C	Buried Cable - NonMetallic	155.69	0.79	0.74	0.28	0.11	0.15	0.00	2.07
2111	20C	Land	2.07	0.00	0.02	0.01	0.00	0.00		0.03
2121	110C	Building	79.19	0.17	0.49	0.19	0.06	0.15		1.06
		Total	**3,662.02**	**29.81**	**14.84**	**5.61**	**2.63**	**4.10**	**0.00**	**56.99**

DS1 Capable Feeder Loop Zone 2

2232.3	357C	Circuit Equipment - Other Digital Equipment	294.54	2.69	1.12	0.42	0.21	0.80	0.00	5.24
2232.2	257C	Circuit Equipment - Pair Gain - Digital	673.32	6.16	2.55	0.96	0.48	0.64	0.00	10.80
2232.2	257CP	Pair Gain - Digital (Customer Premise)	791.26	7.23	3.00	1.13	0.57	0.75	0.00	12.69
2232.2	257CS	Subscriber Pair Gain Equipment (SONET)	509.58	4.66	1.93	0.73	0.37	0.48	0.00	8.17
2232.2	257CSP	Subscriber Pair Gain (SONET - Customer Prem	676.48	6.19	2.56	0.97	0.49	0.64	0.00	10.85
2441	4C	Conduit System	266.82	0.48	1.44	0.54	0.19	0.12	0.00	2.77
2422.11,.21	5C	Underground Cable - Metallic	113.90	0.86	0.53	0.20	0.08	0.23	0.00	1.91
2423.11,.21	45C	Buried Cable - Metallic	23.97	0.12	0.11	0.04	0.02	0.10	0.00	0.39
2422.12,.22	85C	Underground Cable - NonMetallic	91.95	0.54	0.43	0.16	0.07	0.05	0.00	1.26
2423.12,.22	845C	Buried Cable - NonMetallic	252.82	1.28	1.20	0.45	0.18	0.24	0.00	3.36
2111	20C	Land	2.07	0.00	0.02	0.01	0.00	0.00		0.03
2121	110C	Building	79.19	0.17	0.49	0.19	0.06	0.15		1.06
		Total	**3,775.90**	**30.39**	**15.39**	**5.82**	**2.71**	**4.21**	**0.00**	**58.51**

DS1 Capable Feeder Loop Zone 3

2232.3	357C	Circuit Equipment - Other Digital Equipment	294.54	2.69	1.12	0.42	0.21	0.80	0.00	5.24
2232.2	257C	Circuit Equipment - Pair Gain - Digital	673.32	6.16	2.55	0.96	0.48	0.64	0.00	10.80
2232.2	257CP	Pair Gain - Digital (Customer Premise)	791.26	7.23	3.00	1.13	0.57	0.75	0.00	12.69
2232.2	257CS	Subscriber Pair Gain Equipment (SONET)	509.58	4.66	1.93	0.73	0.37	0.48	0.00	8.17
2232.2	257CSP	Subscriber Pair Gain (SONET - Customer Prem	676.48	6.19	2.56	0.97	0.49	0.64	0.00	10.85
2441	4C	Conduit System	149.09	0.27	0.80	0.30	0.11	0.07	0.00	1.55
2422.11,.21	5C	Underground Cable - Metallic	61.43	0.47	0.29	0.11	0.04	0.12	0.00	1.03

7/19/01
South Dakota

Hicap Unbundled Network Elements

Acct	FRC	Account Name	Investment	Depreciation	Cost Of Money	Income Tax	Ad Valorem	Maintenance	Switch RTU	Total Capital Costs
2423.11,.21	45C	Buried Cable - Metallic	97.16	0.49	0.46	0.17	0.07	0.39	0.00	1.59
2422.12,.22	85C	Underground Cable - NonMetallic	88.38	0.52	0.42	0.16	0.06	0.05	0.00	1.21
2423.12,.22	845C	Buried Cable - NonMetallic	727.57	3.69	3.46	1.31	0.52	0.68	0.00	9.67
2111	20C	Land	2.07	0.00	0.02	0.01	0.00	0.00		0.03
2121	110C	Building	79.19	0.17	0.49	0.19	0.06	0.15		1.06
		Total	**4,150.07**	**32.54**	**17.10**	**6.46**	**2.98**	**4.79**	**0.00**	**63.86**

DS1 Capable Feeder Loop State Avg.

2232.3	357C	Circuit Equipment - Other Digital Equipment	294.54	2.69	1.12	0.42	0.21	0.80	0.00	5.24
2232.2	257C	Circuit Equipment - Pair Gain - Digital	673.32	6.16	2.55	0.96	0.48	0.64	0.00	10.80
2232.2	257CP	Pair Gain - Digital (Customer Premise)	791.26	7.23	3.00	1.13	0.57	0.75	0.00	12.69
2232.2	257CS	Subscriber Pair Gain Equipment (SONET)	509.58	4.66	1.93	0.73	0.37	0.48	0.00	8.17
2232.2	257CSP	Subscriber Pair Gain (SONET - Customer Prem	676.48	6.19	2.56	0.97	0.49	0.64	0.00	10.85
2441	4C	Conduit System	207.36	0.37	1.12	0.42	0.15	0.10	0.00	2.15
2422.11,.21	5C	Underground Cable - Metallic	87.59	0.66	0.41	0.16	0.06	0.18	0.00	1.47
2423.11,.21	45C	Buried Cable - Metallic	58.81	0.30	0.28	0.11	0.04	0.23	0.00	0.96
2422.12,.22	85C	Underground Cable - NonMetallic	88.01	0.52	0.41	0.16	0.06	0.05	0.00	1.21
2423.12,.22	845C	Buried Cable - NonMetallic	459.63	2.33	2.19	0.83	0.33	0.43	0.00	6.11
2111	20C	Land	2.07	0.00	0.02	0.01	0.00	0.00		0.03
2121	110C	Building	79.19	0.17	0.49	0.19	0.06	0.15		1.06
		Total	**3,927.83**	**31.28**	**16.07**	**6.08**	**2.82**	**4.46**	**0.00**	**60.71**

DS3 Capable Loop Zone 1

2232.3	357C	Circuit Equipment - Other Digital Equipment	1,800.47	16.46	6.82	2.58	1.29	4.88	0.00	32.03
2232.2	257C	Circuit Equipment - Pair Gain - Digital	376.81	3.45	1.43	0.54	0.27	0.36	0.00	6.04
2232.2	257CP	Pair Gain - Digital (Customer Premise)	165.05	1.51	0.63	0.24	0.12	0.16	0.00	2.65
2232.2	257CS	Subscriber Pair Gain Equipment (SONET)	13,056.52	119.38	49.46	18.70	9.37	12.43	0.00	209.33
2232.2	257CSP	Subscriber Pair Gain (SONET - Customer Prem	20,904.67	191.13	79.19	29.94	15.00	19.89	0.00	335.16
2441	4C	Conduit System	2,914.01	5.21	15.69	5.93	2.09	1.35	0.00	30.27
2422.12,.22	85C	Underground Cable - NonMetallic	2,188.04	12.90	10.31	3.90	1.57	1.29	0.00	29.98
2423.12,.22	845C	Buried Cable - NonMetallic	4,056.86	20.59	19.29	7.29	2.91	3.81	0.00	53.89
2426.2	862C	Intrabuilding Network Cable - NonMetallic	69.83	0.36	0.34	0.13	0.05	0.04	0.00	0.92
2111	20C	Land	21.33	0.00	0.17	0.06	0.02	0.04		0.29
2121	110C	Building	816.53	1.76	5.09	1.93	0.59	1.52		10.88
		Total	**46,370.11**	**372.74**	**188.41**	**71.25**	**33.28**	**45.76**	**0.00**	**711.45**

DS3 Capable Loop Zone 2

2232.3	357C	Circuit Equipment - Other Digital Equipment	1,800.47	16.46	6.82	2.58	1.29	4.88	0.00	32.03
2232.2	257C	Circuit Equipment - Pair Gain - Digital	376.81	3.45	1.43	0.54	0.27	0.36	0.00	6.04
2232.2	257CP	Pair Gain - Digital (Customer Premise)	165.05	1.51	0.63	0.24	0.12	0.16	0.00	2.65
2232.2	257CS	Subscriber Pair Gain Equipment (SONET)	13,056.52	119.38	49.46	18.70	9.37	12.43	0.00	209.33
2232.2	257CSP	Subscriber Pair Gain (SONET - Customer Prem	20,904.67	191.13	79.19	29.94	15.00	19.89	0.00	335.16

7/19/01
South Dakota

Hicap Unbundled Network Elements

Acct	FRC	Account Name	Investment	Depreciation	Cost Of Money	Income Tax	Ad Valorem	Maintenance	Switch RTU	Total Capital Costs
2441	4C	Conduit System	2,965.04	5.30	15.96	6.04	2.13	1.37	0.00	30.80
2422.12,.22	85C	Underground Cable - NonMetallic	2,223.65	13.11	10.48	3.96	1.60	1.32	0.00	30.46
2423.12,.22	845C	Buried Cable - NonMetallic	6,661.52	33.81	31.67	11.98	4.78	6.25	0.00	88.50
2426.2	862C	Intrabuilding Network Cable - NonMetallic	69.83	0.36	0.34	0.13	0.05	0.04	0.00	0.92
2111	20C	Land	21.33	0.00	0.17	0.06	0.02	0.04		0.29
2121	110C	Building	816.53	1.76	5.09	1.93	0.59	1.52		10.88
		Total	**49,061.41**	**386.26**	**201.24**	**76.10**	**35.21**	**48.25**	**0.00**	**747.07**

DS3 Capable Loop Zone 3

2232.3	357C	Circuit Equipment - Other Digital Equipment	1,800.47	16.46	6.82	2.58	1.29	4.88	0.00	32.03
2232.2	257C	Circuit Equipment - Pair Gain - Digital	376.81	3.45	1.43	0.54	0.27	0.36	0.00	6.04
2232.2	257CP	Pair Gain - Digital (Customer Premise)	165.05	1.51	0.63	0.24	0.12	0.16	0.00	2.65
2232.2	257CS	Subscriber Pair Gain Equipment (SONET)	13,056.52	119.38	49.46	18.70	9.37	12.43	0.00	209.33
2232.2	257CSP	Subscriber Pair Gain (SONET - Customer Prem	20,904.67	191.13	79.19	29.94	15.00	19.89	0.00	335.16
2441	4C	Conduit System	1,730.44	3.09	9.32	3.52	1.24	0.80	0.00	17.97
2422.12,.22	85C	Underground Cable - NonMetallic	1,362.05	8.03	6.42	2.43	0.98	0.81	0.00	18.66
2423.12,.22	845C	Buried Cable - NonMetallic	19,454.80	98.74	92.51	34.98	13.96	18.26	0.00	258.45
2426.2	862C	Intrabuilding Network Cable - NonMetallic	69.83	0.36	0.34	0.13	0.05	0.04	0.00	0.92
2111	20C	Land	21.33	0.00	0.17	0.06	0.02	0.04		0.29
2121	110C	Building	816.53	1.76	5.09	1.93	0.59	1.52		10.88
		Total	**59,758.48**	**443.91**	**251.36**	**95.05**	**42.89**	**59.18**	**0.00**	**892.39**

DS3 Capable Loop State Avg.

2232.3	357C	Circuit Equipment - Other Digital Equipment	1,800.47	16.46	6.82	2.58	1.29	4.88	0.00	32.03
2232.2	257C	Circuit Equipment - Pair Gain - Digital	376.81	3.45	1.43	0.54	0.27	0.36	0.00	6.04
2232.2	257CP	Pair Gain - Digital (Customer Premise)	165.05	1.51	0.63	0.24	0.12	0.16	0.00	2.65
2232.2	257CS	Subscriber Pair Gain Equipment (SONET)	13,056.52	119.38	49.46	18.70	9.37	12.43	0.00	209.33
2232.2	257CSP	Subscriber Pair Gain (SONET - Customer Prem	20,904.67	191.13	79.19	29.94	15.00	19.89	0.00	335.16
2441	4C	Conduit System	2,335.16	4.17	12.57	4.75	1.68	1.08	0.00	24.26
2422.12,.22	85C	Underground Cable - NonMetallic	1,784.07	10.52	8.41	3.18	1.28	1.06	0.00	24.44
2423.12,.22	845C	Buried Cable - NonMetallic	12,238.44	62.11	58.19	22.01	8.78	11.49	0.00	162.58
2426.2	862C	Intrabuilding Network Cable - NonMetallic	69.83	0.36	0.34	0.13	0.05	0.04	0.00	0.92
2111	20C	Land	21.33	0.00	0.17	0.06	0.02	0.04		0.29
2121	110C	Building	816.53	1.76	5.09	1.93	0.59	1.52		10.88
		Total	**53,568.88**	**410.85**	**222.29**	**84.06**	**38.45**	**52.94**	**0.00**	**808.59**

INTEROFFICE DARK FIBER - PER ROUTE MILE

2441	4C	Conduit System	615.25	1.10	3.31	1.25	0.44	0.28	0.00	6.39
2422.12,.22	85C	Underground Cable - NonMetallic	413.72	2.44	1.95	0.74	0.30	0.24	0.00	5.67
2423.12,.22	845C	Buried Cable - NonMetallic	3,076.74	15.61	14.63	5.53	2.21	2.89	0.00	40.87
		Total	**4,105.71**	**19.15**	**19.89**	**7.52**	**2.95**	**3.42**	**0.00**	**52.93**

7/19/01
South Dakota

Hicap Unbundled Network Elements

Acct	FRC	Account Name	Investment	Depreciation	Cost Of Money	Income Tax	Ad Valorem	Maintenance	Switch RTU	Total Capital Costs
2 Fiber Termination - InterOffice										
2232.2	257C	Circuit Equipment - Pair Gain - Digital	354.31	3.24	1.34	0.51	0.25	0.34	0.00	5.68
2111	20C	Land	0.50	0.00	0.00	0.00	0.00	0.00		0.01
2121	110C	Building	18.99	0.04	0.12	0.04	0.01	0.04		0.25
		Total	**373.80**	**3.28**	**1.46**	**0.55**	**0.27**	**0.37**	**0.00**	**5.94**
2 Fiber Cross Connection										
2232.2	257C	Circuit Equipment - Pair Gain - Digital	196.73	1.80	0.75	0.28	0.14	0.19	0.00	3.15
2111	20C	Land	0.28	0.00	0.00	0.00	0.00	0.00		0.00
2121	110C	Building	10.54	0.02	0.07	0.02	0.01	0.02		0.14
		Total	**207.55**	**1.82**	**0.81**	**0.31**	**0.15**	**0.21**	**0.00**	**3.30**
UNBUNDLED DARK FIBER LOOP - PER 2 FIBER LOOP										
2441	4C	Conduit System	1,471.15	2.63	7.92	2.99	1.06	0.68	0.00	15.28
2422.12,.22	85C	Underground Cable - NonMetallic	1,026.69	6.05	4.84	1.83	0.74	0.61	0.00	14.07
2423.12,.22	845C	Buried Cable - NonMetallic	7,710.22	39.13	36.66	13.86	5.53	7.24	0.00	102.43
		Total	**10,208.06**	**47.81**	**49.42**	**18.69**	**7.33**	**8.53**	**0.00**	**131.77**
2 Fiber Loop Termination, per termination at wire center										
2232.2	257C	Circuit Equipment - Pair Gain - Digital	376.46	3.44	1.43	0.54	0.27	0.36	0.00	6.04
2111	20C	Land	0.53	0.00	0.00	0.00	0.00	0.00		0.01
2121	110C	Building	20.18	0.04	0.13	0.05	0.01	0.04		0.27
		Total	**397.16**	**3.49**	**1.56**	**0.59**	**0.29**	**0.40**	**0.00**	**6.31**
2 Fiber Loop Termination, per termination at premises										
2232.2	257CP	Pair Gain - Digital (Customer Premise)	329.79	3.02	1.25	0.47	0.24	0.31	0.00	5.29
		Total	**329.79**	**3.02**	**1.25**	**0.47**	**0.24**	**0.31**	**0.00**	**5.29**
EXTENDED UNBUNDLED DARK FIBER (E-UDF)										
2441	4C	Conduit System	1,471.15	2.63	7.92	2.99	1.06	0.68	0.00	15.28
2422.12,.22	85C	Underground Cable - NonMetallic	1,026.69	6.05	4.84	1.83	0.74	0.61	0.00	14.07
2423.12,.22	845C	Buried Cable - NonMetallic	7,710.22	39.13	36.66	13.86	5.53	7.24	0.00	102.43
		Total	**10,208.06**	**47.81**	**49.42**	**18.69**	**7.33**	**8.53**	**0.00**	**131.77**

7/19/01
South Dakota

Hicap Unbundled Network Elements

Acct	FRC	Account Name	Investment	Depreciation	Cost Of Money	Income Tax	Ad Valorem	Maintenance	Switch RTU	Total Capital Costs
2 Fiber Loop Termination, per termination at wire center										
2232.2	257C	Circuit Equipment - Pair Gain - Digital	376.46	3.44	1.43	0.54	0.27	0.36	0.00	6.04
2111	20C	Land	0.53	0.00	0.00	0.00	0.00	0.00		0.01
2121	110C	Building	20.18	0.04	0.13	0.05	0.01	0.04		0.27
		Total	**397.16**	**3.49**	**1.56**	**0.59**	**0.29**	**0.40**	**0.00**	**6.31**
2 Fiber Loop Termination, per termination at premises										
2232.2	257CP	Pair Gain - Digital (Customer Premise)	329.79	3.02	1.25	0.47	0.24	0.31	0.00	5.29
		Total	**329.79**	**3.02**	**1.25**	**0.47**	**0.24**	**0.31**	**0.00**	**5.29**

	A	B	C	D	E	F	G	H	I
1	Investment								
2	STUDY	Hicap Unbundled Network Elements							
3	DATE	7/20/01						DS1 NAC MODEL	
4	GROUP	DS1 Capable Loop Zone 1						DS1V0601ZONES	Investments by zone
5	LOADED	SD	294.5379996193	0.	0.	357C	CIRCUIT-OTHER DIGITAL		for WINPC3
6	LOADED	SD	671.4853283956	0.	1.8390427494	257C	CIRCUIT-DIGITAL		
7	LOADED	SD	785.6099610507	0.	5.6452661297	257CP	CIRCUIT-DIGITAL -PREMISES		
8	LOADED	SD	509.5769325842	0.	0.	257CS	CIRCUIT-DIGITAL SONET		
9	LOADED	SD	671.5258888176	0.	4.9546692235	257CSP	CIRCUIT-DIGITAL SONET-PREMISES		
10	LOADED	SD	6.2455613165	0.	0.	1C	POLES		
11	LOADED	SD	0.3049658938	0.	0.	3C	C WIRE		
12	LOADED	SD	262.6144345458	0.	0.	4C	CONDUIT SYSTEMS		
13	LOADED	SD	133.7378419087	0.	0.	5C	UNDERGROUND CABLE METALLIC		
14	LOADED	SD	23.837322914	0.	0.	35C	BURIED DROP		
15	LOADED	SD	4.2158018171	0.	0.	42C	AERIAL DROP		
16	LOADED	SD	292.3825593124	0.	0.	45C	BURIED CABLE METALLIC		
17	LOADED	SD	11.8234263109	0.	0.	52C	AERIAL CABLE METALLIC		
18	LOADED	SD	65.2777522655	0.	0.	62C	INTRABUILDING CABLE METALLIC		
19	LOADED	SD	90.1837964432	0.	0.	85C	UNDERGROUND CABLE NONMETALLIC		
20	LOADED	SD	155.691611854	0.	0.	845C	BURIED CABLE NONMETALLIC		
21	LOADED	SD	2.4266596624	0.	0.	862C	INTRABUILDING CABLE NONMETALLIC		
22	GROUP	DS1 Capable Loop Zone 2						DS1V0601ZONES	Investments by zone
23	LOADED	SD	294.5379996193	0.	0.	357C	CIRCUIT-OTHER DIGITAL		for WINPC3
24	LOADED	SD	671.4853283956	0.	1.8390427494	257C	CIRCUIT-DIGITAL		
25	LOADED	SD	785.6099610507	0.	5.6452661297	257CP	CIRCUIT-DIGITAL -PREMISES		
26	LOADED	SD	509.5769325842	0.	0.	257CS	CIRCUIT-DIGITAL SONET		
27	LOADED	SD	671.5258888176	0.	4.9546692235	257CSP	CIRCUIT-DIGITAL SONET-PREMISES		
28	LOADED	SD	6.2455613165	0.	0.	1C	POLES		
29	LOADED	SD	0.3049658938	0.	0.	3C	C WIRE		
30	LOADED	SD	266.823998214	0.	0.	4C	CONDUIT SYSTEMS		
31	LOADED	SD	135.4071252811	0.	0.	5C	UNDERGROUND CABLE METALLIC		
32	LOADED	SD	23.837322914	0.	0.	35C	BURIED DROP		
33	LOADED	SD	4.2158018171	0.	0.	42C	AERIAL DROP		
34	LOADED	SD	296.1220248265	0.	0.	45C	BURIED CABLE METALLIC		
35	LOADED	SD	11.8234263109	0.	0.	52C	AERIAL CABLE METALLIC		
36	LOADED	SD	65.2777522655	0.	0.	62C	INTRABUILDING CABLE METALLIC		
37	LOADED	SD	97.3183656142	0.	0.	85C	UNDERGROUND CABLE NONMETALLIC		
38	LOADED	SD	252.8197012533	0.	0.	845C	BURIED CABLE NONMETALLIC		
39	LOADED	SD	2.4266596624	0.	0.	862C	INTRABUILDING CABLE NONMETALLIC		
40	GROUP	DS1 Capable Loop Zone 3						DS1V0601ZONES	Investments by zone

	A	B	C	D	E	F	G	H	I
41	LOADED	SD	294.5379996193	0.	0.	357C	CIRCUIT-OTHER DIGITAL		for WINPC3
42	LOADED	SD	671.4853283956	0.	1.8390427494	257C	CIRCUIT-DIGITAL		
43	LOADED	SD	785.6099610507	0.	5.6452661297	257CP	CIRCUIT-DIGITAL -PREMISES		
44	LOADED	SD	509.5769325842	0.	0.	257CS	CIRCUIT-DIGITAL SONET		
45	LOADED	SD	671.5258888176	0.	4.9546692235	257CSP	CIRCUIT-DIGITAL SONET-PREMISES		
46	LOADED	SD	6.2455613165	0.	0.	1C	POLES		
47	LOADED	SD	0.3049658938	0.	0.	3C	C WIRE		
48	LOADED	SD	149.0917238859	0.	0.	4C	CONDUIT SYSTEMS		
49	LOADED	SD	82.936694324	0.	0.	5C	UNDERGROUND CABLE METALLIC		
50	LOADED	SD	23.837322914	0.	0.	35C	BURIED DROP		
51	LOADED	SD	4.2158018171	0.	0.	42C	AERIAL DROP		
52	LOADED	SD	369.3123295955	0.	0.	45C	BURIED CABLE METALLIC		
53	LOADED	SD	11.8234263109	0.	0.	52C	AERIAL CABLE METALLIC		
54	LOADED	SD	65.2777522655	0.	0.	62C	INTRABUILDING CABLE METALLIC		
55	LOADED	SD	93.7409268048	0.	0.	85C	UNDERGROUND CABLE NONMETALLIC		
56	LOADED	SD	727.5718260408	0.	0.	845C	BURIED CABLE NONMETALLIC		
57	LOADED	SD	2.4266596624	0.	0.	862C	INTRABUILDING CABLE NONMETALLIC		
58	GROUP	DS1 Capable Loop State Avg.						DS1V0601ZONES	Investments by zone
59	LOADED	SD	294.5379996193	0.	0.	357C	CIRCUIT-OTHER DIGITAL		for WINPC3
60	LOADED	SD	671.4853283956	0.	1.8390427494	257C	CIRCUIT-DIGITAL		
61	LOADED	SD	785.6099610507	0.	5.6452661297	257CP	CIRCUIT-DIGITAL -PREMISES		
62	LOADED	SD	509.5769325842	0.	0.	257CS	CIRCUIT-DIGITAL SONET		
63	LOADED	SD	671.5258888176	0.	4.9546692235	257CSP	CIRCUIT-DIGITAL SONET-PREMISES		
64	LOADED	SD	6.2455613165	0.	0.	1C	POLES		
65	LOADED	SD	0.3049658938	0.	0.	3C	C WIRE		
66	LOADED	SD	207.36005553	0.	0.	4C	CONDUIT SYSTEMS		
67	LOADED	SD	109.094905502	0.	0.	5C	UNDERGROUND CABLE METALLIC		
68	LOADED	SD	23.837322914	0.	0.	35C	BURIED DROP		
69	LOADED	SD	4.2158018171	0.	0.	42C	AERIAL DROP		
70	LOADED	SD	330.9549030755	0.	0.	45C	BURIED CABLE METALLIC		
71	LOADED	SD	11.8234263109	0.	0.	52C	AERIAL CABLE METALLIC		
72	LOADED	SD	65.2777522655	0.	0.	62C	INTRABUILDING CABLE METALLIC		
73	LOADED	SD	93.3749149522	0.	0.	85C	UNDERGROUND CABLE NONMETALLIC		
74	LOADED	SD	459.633768432	0.	0.	845C	BURIED CABLE NONMETALLIC		
75	LOADED	SD	2.4266596624	0.	0.	862C	INTRABUILDING CABLE NONMETALLIC		
76	GROUP	DS1 Capable Feeder Loop Zone 1						DS1V0601ZONES	Investments by zone
77	LOADED	SD	294.5379996193	0.	0.	357C	CIRCUIT-OTHER DIGITAL		for WINPC3
78	LOADED	SD	671.4853283956	0.	1.8390427494	257C	CIRCUIT-DIGITAL		
79	LOADED	SD	785.6099610507	0.	5.6452661297	257CP	CIRCUIT-DIGITAL -PREMISES		
80	LOADED	SD	509.5769325842	0.	0.	257CS	CIRCUIT-DIGITAL SONET		

	A	B	C	D	E	F	G	H	I
81	LOADED	SD	671.5258888176	0.	4.9546692235	257CSP	CIRCUIT-DIGITAL SONET-PREMISES		
82	LOADED	SD	0.	0.	0.	1C	POLES		
83	LOADED	SD	0.	0.	0.	3C	C WIRE		
84	LOADED	SD	262.6144345458	0.	0.	4C	CONDUIT SYSTEMS		
85	LOADED	SD	112.2317411955	0.	0.	5C	UNDERGROUND CABLE METALLIC		
86	LOADED	SD	0.	0.	0.	35C	BURIED DROP		
87	LOADED	SD	0.	0.	0.	42C	AERIAL DROP		
88	LOADED	SD	20.2333772757	0.	0.	45C	BURIED CABLE METALLIC		
89	LOADED	SD	0.	0.	0.	52C	AERIAL CABLE METALLIC		
90	LOADED	SD	0.	0.	0.	62C	INTRABUILDING CABLE METALLIC		
91	LOADED	SD	84.8178793145	0.	0.	85C	UNDERGROUND CABLE NONMETALLIC		
92	LOADED	SD	155.691611854	0.	0.	845C	BURIED CABLE NONMETALLIC		
93	LOADED	SD	0.	0.	0.	862C	INTRABUILDING CABLE NONMETALLIC		
94	GROUP	DS1 Capable Feeder Loop Zone 2						DS1V0601ZONES	Investments by zone
95	LOADED	SD	294.5379996193	0.	0.	357C	CIRCUIT-OTHER DIGITAL		for WINPC3
96	LOADED	SD	671.4853283956	0.	1.8390427494	257C	CIRCUIT-DIGITAL		
97	LOADED	SD	785.6099610507	0.	5.6452661297	257CP	CIRCUIT-DIGITAL -PREMISES		
98	LOADED	SD	509.5769325842	0.	0.	257CS	CIRCUIT-DIGITAL SONET		
99	LOADED	SD	671.5258888176	0.	4.9546692235	257CSP	CIRCUIT-DIGITAL SONET-PREMISES		
100	LOADED	SD	0.	0.	0.	1C	POLES		
101	LOADED	SD	0.	0.	0.	3C	C WIRE		
102	LOADED	SD	266.823998214	0.	0.	4C	CONDUIT SYSTEMS		
103	LOADED	SD	113.9010245679	0.	0.	5C	UNDERGROUND CABLE METALLIC		
104	LOADED	SD	0.	0.	0.	35C	BURIED DROP		
105	LOADED	SD	0.	0.	0.	42C	AERIAL DROP		
106	LOADED	SD	23.9728427898	0.	0.	45C	BURIED CABLE METALLIC		
107	LOADED	SD	0.	0.	0.	52C	AERIAL CABLE METALLIC		
108	LOADED	SD	0.	0.	0.	62C	INTRABUILDING CABLE METALLIC		
109	LOADED	SD	91.9524484855	0.	0.	85C	UNDERGROUND CABLE NONMETALLIC		
110	LOADED	SD	252.8197012533	0.	0.	845C	BURIED CABLE NONMETALLIC		
111	LOADED	SD	0.	0.	0.	862C	INTRABUILDING CABLE NONMETALLIC		
112	GROUP	DS1 Capable Feeder Loop Zone 3						DS1V0601ZONES	Investments by zone
113	LOADED	SD	294.5379996193	0.	0.	357C	CIRCUIT-OTHER DIGITAL		for WINPC3
114	LOADED	SD	671.4853283956	0.	1.8390427494	257C	CIRCUIT-DIGITAL		run w/o distribution
115	LOADED	SD	785.6099610507	0.	5.6452661297	257CP	CIRCUIT-DIGITAL -PREMISES		
116	LOADED	SD	509.5769325842	0.	0.	257CS	CIRCUIT-DIGITAL SONET		
117	LOADED	SD	671.5258888176	0.	4.9546692235	257CSP	CIRCUIT-DIGITAL SONET-PREMISES		
118	LOADED	SD	0.	0.	0.	1C	POLES		
119	LOADED	SD	0.	0.	0.	3C	C WIRE		
120	LOADED	SD	149.0917238859	0.	0.	4C	CONDUIT SYSTEMS		

	A	B	C	D	E	F	G	H	I
121	LOADED	SD	61.4305936107	0.	0.	5C	UNDERGROUND CABLE METALLIC		
122	LOADED	SD	0.	0.	0.	35C	BURIED DROP		
123	LOADED	SD	0.	0.	0.	42C	AERIAL DROP		
124	LOADED	SD	97.1631475588	0.	0.	45C	BURIED CABLE METALLIC		
125	LOADED	SD	0.	0.	0.	52C	AERIAL CABLE METALLIC		
126	LOADED	SD	0.	0.	0.	62C	INTRABUILDING CABLE METALLIC		
127	LOADED	SD	88.3750096761	0.	0.	85C	UNDERGROUND CABLE NONMETALLIC		
128	LOADED	SD	727.5718260408	0.	0.	845C	BURIED CABLE NONMETALLIC		
129	LOADED	SD	0.	0.	0.	862C	INTRABUILDING CABLE NONMETALLIC		
130	GROUP	DS1 Capable Feeder Loop State Avg.						DS1V0601ZONES	Investments by zone
131	LOADED	SD	294.5379996193	0.	0.	357C	CIRCUIT-OTHER DIGITAL		for WINPC3
132	LOADED	SD	671.4853283956	0.	1.8390427494	257C	CIRCUIT-DIGITAL		run w/o distribution
133	LOADED	SD	785.6099610507	0.	5.6452661297	257CP	CIRCUIT-DIGITAL -PREMISES		
134	LOADED	SD	509.5769325842	0.	0.	257CS	CIRCUIT-DIGITAL SONET		
135	LOADED	SD	671.5258888176	0.	4.9546692235	257CSP	CIRCUIT-DIGITAL SONET-PREMISES		
136	LOADED	SD	0.	0.	0.	1C	POLES		
137	LOADED	SD	0.	0.	0.	3C	C WIRE		
138	LOADED	SD	207.36005553	0.	0.	4C	CONDUIT SYSTEMS		
139	LOADED	SD	87.5888047887	0.	0.	5C	UNDERGROUND CABLE METALLIC		
140	LOADED	SD	0.	0.	0.	35C	BURIED DROP		
141	LOADED	SD	0.	0.	0.	42C	AERIAL DROP		
142	LOADED	SD	58.8057210388	0.	0.	45C	BURIED CABLE METALLIC		
143	LOADED	SD	0.	0.	0.	52C	AERIAL CABLE METALLIC		
144	LOADED	SD	0.	0.	0.	62C	INTRABUILDING CABLE METALLIC		
145	LOADED	SD	88.0089978234	0.	0.	85C	UNDERGROUND CABLE NONMETALLIC		
146	LOADED	SD	459.633768432	0.	0.	845C	BURIED CABLE NONMETALLIC		
147	LOADED	SD	0.	0.	0.	862C	INTRABUILDING CABLE NONMETALLIC	DS3 NAC MODEL	
148	GROUP	DS3 Capable Loop Zone 1						DS3V0601ZONES	Investments by zone
149	LOADED	SD	1,800.4672		0.	357C	SWC DCS		for WINPC3
150	LOADED	SD	376.8096126984		0.	257C	SWC NODE		
151	LOADED	SD	164.2063587302		0.8426698413	257CP	PREMISES NODE		
152	LOADED	SD	13,056.5160536508		0.	257CS	SWC SONET		
153	LOADED	SD	20,738.5145919444		166.1510456614	257CSP	PREMISES SONET		
154	LOADED	SD	2,914.0120967627		0.	4C	STRUCTURE		
155	LOADED	SD	2,188.0394246198		0.	85C	UNDERGROUND FIBER		
156	LOADED	SD	4,056.8588532483		0.	845C	BURIED FIBER		
157	LOADED	SD	69.8316465608		0.	862C	BUILDING FIBER		
158	GROUP	DS3 Capable Loop Zone 2						DS3V0601ZONES	Investments by zone
159	LOADED	SD	1,800.4672		0.	357C	SWC DCS		for WINPC3
160	LOADED	SD	376.8096126984		0.	257C	SWC NODE		

	A	B	C	D	E	F	G	H	I
161	LOADED	SD	164.2063587302		0.8426698413	257CP	PREMISES NODE		
162	LOADED	SD	13,056.5160536508		0.	257CS	SWC SONET		
163	LOADED	SD	20,738.5145919444		166.1510456614	257CSP	PREMISES SONET		
164	LOADED	SD	2,965.0408313654		0.	4C	STRUCTURE		
165	LOADED	SD	2,223.6512601037		0.	85C	UNDERGROUND FIBER		
166	LOADED	SD	6,661.5172781398		0.	845C	BURIED FIBER		
167	LOADED	SD	69.8316465608		0.	862C	BUILDING FIBER		
168	GROUP	DS3 Capable Loop Zone 3						DS3V0601ZONES	Investments by zone
169	LOADED	SD	1,800.4672		0.	357C	SWC DCS		for WINPC3
170	LOADED	SD	376.8096126984		0.	257C	SWC NODE		
171	LOADED	SD	164.2063587302		0.8426698413	257CP	PREMISES NODE		
172	LOADED	SD	13,056.5160536508		0.	257CS	SWC SONET		
173	LOADED	SD	20,738.5145919444		166.1510456614	257CSP	PREMISES SONET		
174	LOADED	SD	1,730.4383781507		0.	4C	STRUCTURE		
175	LOADED	SD	1,362.0492667527		0.	85C	UNDERGROUND FIBER		
176	LOADED	SD	19,454.7976680356		0.	845C	BURIED FIBER		
177	LOADED	SD	69.8316465608		0.	862C	BUILDING FIBER		
178	GROUP	DS3 Capable Loop State Avg.						DS3V0601ZONES	Investments by zone
179	LOADED	SD	1,800.4672		0.	357C	SWC DCS		for WINPC3
180	LOADED	SD	376.8096126984		0.	257C	SWC NODE		
181	LOADED	SD	164.2063587302		0.8426698413	257CP	PREMISES NODE		
182	LOADED	SD	13,056.5160536508		0.	257CS	SWC SONET		
183	LOADED	SD	20,738.5145919444		166.1510456614	257CSP	PREMISES SONET		
184	LOADED	SD	2,335.1647260588		0.	4C	STRUCTURE		
185	LOADED	SD	1,784.0745311872		0.	85C	UNDERGROUND FIBER		
186	LOADED	SD	12,238.4390818668		0.	845C	BURIED FIBER		
187	LOADED	SD	69.8316465608		0.	862C	BUILDING FIBER		
188	GROUP	INTEROFFICE DARK FIBER - PER ROUTE MILE						Dark Fiber Idaho	IOF Fiber Tab
189	LOADED	SD	615.2524978351		0.	4C	Conduit		
190	LOADED	SD	413.7186120806		0.	85C	Underground Fiber		
191	LOADED	SD	3,076.7425022305		0.	845C	Buried Fiber		
192	GROUP	2 Fiber Termination - InterOffice						Dark Fiber Idaho	FDP Tab
193	LOADED	SD	354.3135164179		0.	257C	FDP		
194	GROUP	2 Fiber Cross Connection						Dark Fiber Idaho	Fiber Xconnect Tab
195	LOADED	SD	196.7264		0.	257C	Fiber Patch Cord		
196	GROUP	UNBUNDLED DARK FIBER LOOP - PER 2 FIBER LOOP						Dark Fiber Idaho	Loop Mod Investments
197	LOADED	SD	1,471.153777417		0.	4C	Conduit		Tab
198	LOADED	SD	1,026.685978023		0.	85C	Underground Fiber		
199	LOADED	SD	7,710.2166215761		0.	845C	Buried Fiber		
200	GROUP	2 Fiber Loop Termination, per termination at wire center						Dark Fiber Idaho	FDP Tab

	A	B	C	D	E	F	G	H	I
201	LOADED	SD	376.4562283814		0.	257C	FDP		
202	GROUP	2 Fiber Loop Termination, per termination at premises						Dark Fiber Idaho	FDP Tab
203	LOADED	SD	329.7884804428		0.	257CP	FDP		
204	GROUP	EXTENDED UNBUNDLED DARK FIBER (E-UDF)							
205	LOADED	SD	1,471.153777417		0.	4C	Conduit		
206	LOADED	SD	1,026.685978023		0.	85C	Underground Fiber		
207	LOADED	SD	7,710.2166215761		0.	845C	Buried Fiber		
208	GROUP	2 Fiber Loop Termination, per termination at wire center							
209	LOADED	SD	376.4562283814		0.	257C	FDP		
210	GROUP	2 Fiber Loop Termination, per termination at premises							
211	LOADED	SD	329.7884804428		0.	257CP	FDP		

	A	B
1	Parameter	
2	SD	
3	7	
4	2	
5	Monthly	12
6	Yes	
7	No	
8		
9	11	
10	5417	

	A	B	C	D	E	F	G	H	I	J	K	L	M	N	O
1	ACFIN														
2	00SD02E														
3	357C	DEPR-AVG	COM-AVG	IT-AVG	MTNC-TOT	ADVAL	BLDG	LAND	PRODMAN	SALESEXP	ADVER	BF	NTWKOP	NTWKST	GENLST
4	257C	DEPR-AVG	COM-AVG	IT-AVG	MTNC-TOT	ADVAL	BLDG	LAND	PRODMAN	SALESEXP	ADVER	BF	NTWKOP	NTWKST	GENLST
5	257CP	DEPR-AVG	COM-AVG	IT-AVG	MTNC-TOT	ADVAL	BLDG	LAND	PRODMAN	SALESEXP	ADVER	BF	NTWKOP	NTWKST	GENLST
6	257CS	DEPR-AVG	COM-AVG	IT-AVG	MTNC-TOT	ADVAL	BLDG	LAND	PRODMAN	SALESEXP	ADVER	BF	NTWKOP	NTWKST	GENLST
7	257CSP	DEPR-AVG	COM-AVG	IT-AVG	MTNC-TOT	ADVAL	BLDG	LAND	PRODMAN	SALESEXP	ADVER	BF	NTWKOP	NTWKST	GENLST
8	20C	DEPR-AVG	COM-AVG	IT-AVG	MTNC-TOT	ADVAL	BLDG	LAND	PRODMAN	SALESEXP	ADVER	BF	NTWKOP	NTWKST	GENLST
9	110C	DEPR-AVG	COM-AVG	IT-AVG	MTNC-TOT	ADVAL	BLDG	LAND	PRODMAN	SALESEXP	ADVER	BF	NTWKOP	NTWKST	GENLST
10	1C	DEPR-AVG	COM-AVG	IT-AVG	MTNC-TOT	ADVAL	BLDG	LAND	PRODMAN	SALESEXP	ADVER	BF	NTWKOP	NTWKST	GENLST
11	3C	DEPR-AVG	COM-AVG	IT-AVG	MTNC-TOT	ADVAL	BLDG	LAND	PRODMAN	SALESEXP	ADVER	BF	NTWKOP	NTWKST	GENLST
12	4C	DEPR-AVG	COM-AVG	IT-AVG	MTNC-TOT	ADVAL	BLDG	LAND	PRODMAN	SALESEXP	ADVER	BF	NTWKOP	NTWKST	GENLST
13	5C	DEPR-AVG	COM-AVG	IT-AVG	MTNC-TOT	ADVAL	BLDG	LAND	PRODMAN	SALESEXP	ADVER	BF	NTWKOP	NTWKST	GENLST
14	35C	DEPR-AVG	COM-AVG	IT-AVG	MTNC-TOT	ADVAL	BLDG	LAND	PRODMAN	SALESEXP	ADVER	BF	NTWKOP	NTWKST	GENLST
15	42C	DEPR-AVG	COM-AVG	IT-AVG	MTNC-TOT	ADVAL	BLDG	LAND	PRODMAN	SALESEXP	ADVER	BF	NTWKOP	NTWKST	GENLST
16	45C	DEPR-AVG	COM-AVG	IT-AVG	MTNC-TOT	ADVAL	BLDG	LAND	PRODMAN	SALESEXP	ADVER	BF	NTWKOP	NTWKST	GENLST
17	52C	DEPR-AVG	COM-AVG	IT-AVG	MTNC-TOT	ADVAL	BLDG	LAND	PRODMAN	SALESEXP	ADVER	BF	NTWKOP	NTWKST	GENLST
18	62C	DEPR-AVG	COM-AVG	IT-AVG	MTNC-TOT	ADVAL	BLDG	LAND	PRODMAN	SALESEXP	ADVER	BF	NTWKOP	NTWKST	GENLST
19	85C	DEPR-AVG	COM-AVG	IT-AVG	MTNC-TOT	ADVAL	BLDG	LAND	PRODMAN	SALESEXP	ADVER	BF	NTWKOP	NTWKST	GENLST
20	845C	DEPR-AVG	COM-AVG	IT-AVG	MTNC-TOT	ADVAL	BLDG	LAND	PRODMAN	SALESEXP	ADVER	BF	NTWKOP	NTWKST	GENLST
21	862C	DEPR-AVG	COM-AVG	IT-AVG	MTNC-TOT	ADVAL	BLDG	LAND	PRODMAN	SALESEXP	ADVER	BF	NTWKOP	NTWKST	GENLST
22	357CS	DEPR-AVG	COM-AVG	IT-AVG	MTNC-TOT	ADVAL	BLDG	LAND	PRODMAN	SALESEXP	ADVER	BF	NTWKOP	NTWKST	GENLST

	P	Q	R	S	T	U	V	W	X	Y	Z	AA	AB	AC
1														
2														
3	COMPTR	UNCOLL	ACCNT	HREXP	INTAN	EXEC	PLAN	EXTERN	INFOR	LEGAL	PROCR	RDEXP	GENL	BC
4	COMPTR	UNCOLL	ACCNT	HREXP	INTAN	EXEC	PLAN	EXTERN	INFOR	LEGAL	PROCR	RDEXP	GENL	BC
5	COMPTR	UNCOLL	ACCNT	HREXP	INTAN	EXEC	PLAN	EXTERN	INFOR	LEGAL	PROCR	RDEXP	GENL	BC
6	COMPTR	UNCOLL	ACCNT	HREXP	INTAN	EXEC	PLAN	EXTERN	INFOR	LEGAL	PROCR	RDEXP	GENL	BC
7	COMPTR	UNCOLL	ACCNT	HREXP	INTAN	EXEC	PLAN	EXTERN	INFOR	LEGAL	PROCR	RDEXP	GENL	BC
8	COMPTR	UNCOLL	ACCNT	HREXP	INTAN	EXEC	PLAN	EXTERN	INFOR	LEGAL	PROCR	RDEXP	GENL	BC
9	COMPTR	UNCOLL	ACCNT	HREXP	INTAN	EXEC	PLAN	EXTERN	INFOR	LEGAL	PROCR	RDEXP	GENL	BC
10	COMPTR	UNCOLL	ACCNT	HREXP	INTAN	EXEC	PLAN	EXTERN	INFOR	LEGAL	PROCR	RDEXP	GENL	BC
11	COMPTR	UNCOLL	ACCNT	HREXP	INTAN	EXEC	PLAN	EXTERN	INFOR	LEGAL	PROCR	RDEXP	GENL	BC
12	COMPTR	UNCOLL	ACCNT	HREXP	INTAN	EXEC	PLAN	EXTERN	INFOR	LEGAL	PROCR	RDEXP	GENL	BC
13	COMPTR	UNCOLL	ACCNT	HREXP	INTAN	EXEC	PLAN	EXTERN	INFOR	LEGAL	PROCR	RDEXP	GENL	BC
14	COMPTR	UNCOLL	ACCNT	HREXP	INTAN	EXEC	PLAN	EXTERN	INFOR	LEGAL	PROCR	RDEXP	GENL	BC
15	COMPTR	UNCOLL	ACCNT	HREXP	INTAN	EXEC	PLAN	EXTERN	INFOR	LEGAL	PROCR	RDEXP	GENL	BC
16	COMPTR	UNCOLL	ACCNT	HREXP	INTAN	EXEC	PLAN	EXTERN	INFOR	LEGAL	PROCR	RDEXP	GENL	BC
17	COMPTR	UNCOLL	ACCNT	HREXP	INTAN	EXEC	PLAN	EXTERN	INFOR	LEGAL	PROCR	RDEXP	GENL	BC
18	COMPTR	UNCOLL	ACCNT	HREXP	INTAN	EXEC	PLAN	EXTERN	INFOR	LEGAL	PROCR	RDEXP	GENL	BC
19	COMPTR	UNCOLL	ACCNT	HREXP	INTAN	EXEC	PLAN	EXTERN	INFOR	LEGAL	PROCR	RDEXP	GENL	BC
20	COMPTR	UNCOLL	ACCNT	HREXP	INTAN	EXEC	PLAN	EXTERN	INFOR	LEGAL	PROCR	RDEXP	GENL	BC
21	COMPTR	UNCOLL	ACCNT	HREXP	INTAN	EXEC	PLAN	EXTERN	INFOR	LEGAL	PROCR	RDEXP	GENL	BC
22	COMPTR	UNCOLL	ACCNT	HREXP	INTAN	EXEC	PLAN	EXTERN	INFOR	LEGAL	PROCR	RDEXP	GENL	BC

	A	B	C	D	E	F	G	H	I	J	K	L	M
1	ACFOUT	Factors For: Interconnection											
2	*-Run Done With Database Vintage: 00SD02E, Dated: 02/15/01*												
3	*-Wholesale Cost Program (TELRIC) Data Base released 02/01 (00SD02E).*												
4	*-Factors loaded from Factors Model (Expense Module), Version 00V2.*												
5	*-CAPITAL RECOVERY factors released 01/01 and based on 10.14% Cost*												
6	*Of Money. No 1-10 year factors developed.*												
7	*-MAINTENANCE factors released 01/01.*												
8	*-RTU factors released 02/01.*												
9	*-AD VALOREM Tax released 01/01.*												
10	*-DIRECTLY ASSIGNED expense factors released 01/01.*												
11	*-BUSINESS FEES released 01/01.*												
12	*-COMMON Expense released 01/01.*												
13	*-TOTAL INSTALLED FACTORS (TIF) released 01/01.*												
14	*-POWER investment factors released 01/01.*												
15	*-SALES TAX released 01/01.*												
16	*-TELCO Engineering factors released 01/01.*												
17	*-INTEREST DURING CONSTRUCTION released 01/01.*												
18	*-LAND AND BUILDING factors released 01/01.*												
19	*-DIRECTLY ATTRIBUTABLE expense factors released 01/01.*												
20	*-SALES EXPENSE factor released 01/01.*												
21	*-PRODUCT MANAGEMENT factor released 01/01.*												
22	*-BILLING & COLLECTION factor released 01/01.*												
23	*-PROVISIONING factors released 01/01.*												
24	*-TELEPHONE PLANT INDEX released 01/01.*												
25	*-STRUCTURE RATIO released 01/01.*												
26													
27													
28													
29													
30													
31													
32													
33													

	A	B	C	D	E	F	G	H	I	J	K	L	M	N	O
34															
35															
36															
37															
38	State:	South Dakota													
39															
40	ACCOUNTS	DEPR-AVG	COM-AVG	IT-AVG	MTNC-TOT	ADVAL	BLDG	LAND	PRODMAN	SALESEXP	ADVER	BF	NTWKOP	NTWKST	GENLST
41	357C	0.109717	0.045455	0.017189	0.032498	0.008613	0.053600	0.001400	0.025565	0.009225	0.000000	0.002025	0.040880	0.015364	0.069508
42	257C	0.109717	0.045455	0.017189	0.011420	0.008613	0.053600	0.001400	0.025565	0.009225	0.000000	0.002025	0.040880	0.015364	0.069508
43	257CP	0.109717	0.045455	0.017189	0.011420	0.008613	0.000000	0.000000	0.025565	0.009225	0.000000	0.002025	0.040880	0.015364	0.069508
44	257CS	0.109717	0.045455	0.017189	0.011420	0.008613	0.053600	0.001400	0.025565	0.009225	0.000000	0.002025	0.040880	0.015364	0.069508
45	257CSP	0.109717	0.045455	0.017189	0.011420	0.008613	0.000000	0.000000	0.025565	0.009225	0.000000	0.002025	0.040880	0.015364	0.069508
46	20C	0.000000	0.096506	0.036495	0.022353	0.008613	0.000000	0.000000	0.025565	0.009225	0.000000	0.002025	0.040880	0.015364	0.069508
47	110C	0.025821	0.074869	0.028313	0.022353	0.008613	0.000000	0.000000	0.025565	0.009225	0.000000	0.002025	0.040880	0.015364	0.069508
48	1C	0.122572	0.036893	0.013952	0.032460	0.008613	0.000000	0.000000	0.025565	0.009225	0.000000	0.002025	0.040880	0.015364	0.069508
49	3C	0.274000	0.091689	0.034674	0.010002	0.008613	0.000000	0.000000	0.025565	0.009225	0.000000	0.002025	0.040880	0.015364	0.069508
50	4C	0.021443	0.064600	0.024429	0.005558	0.008613	0.000000	0.000000	0.025565	0.009225	0.000000	0.002025	0.040880	0.015364	0.069508
51	5C	0.090987	0.056203	0.021254	0.024153	0.008613	0.000000	0.000000	0.025565	0.009225	0.000000	0.002025	0.040880	0.015364	0.069508
52	35C	0.060902	0.057059	0.021578	0.047717	0.008613	0.000000	0.000000	0.025565	0.009225	0.000000	0.002025	0.040880	0.015364	0.069508
53	42C	0.105201	0.054376	0.020563	0.131511	0.008613	0.000000	0.000000	0.025565	0.009225	0.000000	0.002025	0.040880	0.015364	0.069508
54	45C	0.060902	0.057059	0.021578	0.047717	0.008613	0.000000	0.000000	0.025565	0.009225	0.000000	0.002025	0.040880	0.015364	0.069508
55	52C	0.105201	0.054376	0.020563	0.131511	0.008613	0.000000	0.000000	0.025565	0.009225	0.000000	0.002025	0.040880	0.015364	0.069508
56	62C	0.062692	0.058372	0.022074	0.023289	0.008613	0.000000	0.000000	0.025565	0.009225	0.000000	0.002025	0.040880	0.015364	0.069508
57	85C	0.070742	0.056557	0.021388	0.007097	0.008613	0.000000	0.000000	0.025565	0.009225	0.000000	0.002025	0.040880	0.015364	0.069508
58	845C	0.060902	0.057059	0.021578	0.011263	0.008613	0.000000	0.000000	0.025565	0.009225	0.000000	0.002025	0.040880	0.015364	0.069508
59	862C	0.062692	0.058372	0.022074	0.006920	0.008613	0.000000	0.000000	0.025565	0.009225	0.000000	0.002025	0.040880	0.015364	0.069508
60	357CS	0.109717	0.045455	0.017189	0.032498	0.008613	0.053600	0.001400	0.025565	0.009225	0.000000	0.002025	0.040880	0.015364	0.069508

	P	Q	R	S	T	U	V	W	X	Y	Z	AA	AB	AC
34														
35														
36														
37														
38														
39														
40	COMPTR	UNCOLL	ACCNT	HREXP	INTAN	EXEC	PLAN	EXTERN	INFOR	LEGAL	PROCR	RDEXP	GENL	BC
41	0.034714	0.000401	0.008839	0.008145	0.002091	0.007805	0.000580	0.013029	0.057009	0.006148	0.002359	0.000036	0.015212	0.004304
42	0.034714	0.000401	0.008839	0.008145	0.002091	0.007805	0.000580	0.013029	0.057009	0.006148	0.002359	0.000036	0.015212	0.004304
43	0.034714	0.000401	0.008839	0.008145	0.002091	0.007805	0.000580	0.013029	0.057009	0.006148	0.002359	0.000036	0.015212	0.004304
44	0.034714	0.000401	0.008839	0.008145	0.002091	0.007805	0.000580	0.013029	0.057009	0.006148	0.002359	0.000036	0.015212	0.004304
45	0.034714	0.000401	0.008839	0.008145	0.002091	0.007805	0.000580	0.013029	0.057009	0.006148	0.002359	0.000036	0.015212	0.004304
46	0.034714	0.000401	0.008839	0.008145	0.002091	0.007805	0.000580	0.013029	0.057009	0.006148	0.002359	0.000036	0.015212	0.004304
47	0.034714	0.000401	0.008839	0.008145	0.002091	0.007805	0.000580	0.013029	0.057009	0.006148	0.002359	0.000036	0.015212	0.004304
48	0.034714	0.000401	0.008839	0.008145	0.002091	0.007805	0.000580	0.013029	0.057009	0.006148	0.002359	0.000036	0.015212	0.004304
49	0.034714	0.000401	0.008839	0.008145	0.002091	0.007805	0.000580	0.013029	0.057009	0.006148	0.002359	0.000036	0.015212	0.004304
50	0.034714	0.000401	0.008839	0.008145	0.002091	0.007805	0.000580	0.013029	0.057009	0.006148	0.002359	0.000036	0.015212	0.004304
51	0.034714	0.000401	0.008839	0.008145	0.002091	0.007805	0.000580	0.013029	0.057009	0.006148	0.002359	0.000036	0.015212	0.004304
52	0.034714	0.000401	0.008839	0.008145	0.002091	0.007805	0.000580	0.013029	0.057009	0.006148	0.002359	0.000036	0.015212	0.004304
53	0.034714	0.000401	0.008839	0.008145	0.002091	0.007805	0.000580	0.013029	0.057009	0.006148	0.002359	0.000036	0.015212	0.004304
54	0.034714	0.000401	0.008839	0.008145	0.002091	0.007805	0.000580	0.013029	0.057009	0.006148	0.002359	0.000036	0.015212	0.004304
55	0.034714	0.000401	0.008839	0.008145	0.002091	0.007805	0.000580	0.013029	0.057009	0.006148	0.002359	0.000036	0.015212	0.004304
56	0.034714	0.000401	0.008839	0.008145	0.002091	0.007805	0.000580	0.013029	0.057009	0.006148	0.002359	0.000036	0.015212	0.004304
57	0.034714	0.000401	0.008839	0.008145	0.002091	0.007805	0.000580	0.013029	0.057009	0.006148	0.002359	0.000036	0.015212	0.004304
58	0.034714	0.000401	0.008839	0.008145	0.002091	0.007805	0.000580	0.013029	0.057009	0.006148	0.002359	0.000036	0.015212	0.004304
59	0.034714	0.000401	0.008839	0.008145	0.002091	0.007805	0.000580	0.013029	0.057009	0.006148	0.002359	0.000036	0.015212	0.004304
60	0.034714	0.000401	0.008839	0.008145	0.002091	0.007805	0.000580	0.013029	0.057009	0.006148	0.002359	0.000036	0.015212	0.004304

South Dakota Public Utilities Commission
Docket No. TC 01_____
Qwest Corporation

Attachment 6

Study No. 5362
Subloop Distribution, Building Cable

Executive Summary

SOUTH DAKOTA

DS0 SUB-LOOP DISTRIBUTION

STUDY ID 5362

PRESCRIBED LIVES
10.14% COM

2001 RECURRING COST STUDY

JULY 2001

DS0 SUB-LOOP DISTRIBUTION

SOUTH DAKOTA
2001

Table of Contents

Section 1 – Study Output

	Page
Executive Summary	1
Study Summary	4
Cost Summary	5
Total Product Costs	7
Investment Cost Calculation	8

Section 2 – Cost Calculations

WINPC3 Investments	10
WINPC3 Parameters	12
WINPC3 ACF Inputs	13
WINPC3 ACF Outputs	16
READ-ME FILE	19
Unbundled Subloop	20
Billing & Collection	21

A. PURPOSE, SCOPE, AND APPLICATION

The purpose of this study is to estimate Qwest's 2001 long-run incremental costs for DS0 Sub-Loop Distribution within the state of South Dakota.

This study develops statewide average Total Element Long Run Incremental Costs (TELRIC). Costs are specific to the state of South Dakota and are stated on a per channel basis, unless specified otherwise. ***Cost results are based on Prescribed Lives and 10.14 % Cost Of Money (COM).***

B. DESCRIPTION OF SERVICE

The DS0 Sub-Loop Distribution provides a CLEC with access to various Sub-Loop Unbundled elements at the established Field Connection Point arrangements.

This cost study includes the costs for the following component:

Distribution Loop - The CLEC places outside plant to a field connection point adjacent to a Qwest feeder distribution interface serving a higher density distribution area such as a high rise building, apartment/office complex or campus arrangement. The CLEC will have contracted for the field connection point prior to purchasing the sub-loop elements.

2-Wire Unbundled Distribution Loop - The 2-Wire Unbundled Distribution Loop is a QWEST provided facility from the QWEST FCP at Serving Area Interface (SAI) to the Network Interface at the customer location.

2-Wire Non-loaded Unbundled Distribution Loop - The 2-Wire Non-loaded Distribution Loop is a QWEST provided facility from the QWEST Field Connection Point to the end user's NI.

Building Cable - The CLEC places outside plant to a building and wishes to access the Qwest owned riser cable or inside wire through a building terminal. The CLEC or building owner will place a common terminal or cross-connect facility that Qwest will jumper to the Qwest terminal and the riser / inside wire.

C. STUDY METHODOLOGY

Qwest uses the Loop Module Program to calculate the total element long run incremental costs associated with Sub-Loop Distribution. This model calculates the incremental costs of essential network components. Loop Mod also includes a unit investment file that includes the cost of each investment component.

The TELRIC Windows Personal Computer Cost Calculator (Wholesale Cost Program) was used to convert installed investments to monthly costs by applying appropriate investment and expense factors to the installed investment.

NOTICE

The information contained herein is confidential and proprietary and should not be disclosed to unauthorized persons. It is meant for use by representatives of U S WEST Communications only.

D. Description OF TOTAL ELEMENT LONG RUN INCREMENTAL COSTS

Total Element Long Run Incremental Cost (TELRIC) studies are performed by Qwest to estimate the economic cost of providing network elements. The QWEST'S TELRIC studies identify the forward-looking costs associated with the provision of the total quantity of a network element in the long run. The *forward-looking* Qwest TELRIC studies identify the costs that are likely to be incurred in the future, and consider the latest forward-looking technologies and methods of operation that are currently available. These studies are *not* embedded or historical, and do not measure the impact of prior investment decisions by the corporation. The Qwest TELRIC studies also identify the *long run* costs associated with providing a network element—reflecting a time period over which all inputs (including changes in the size of facilities, levels of investment, etc.) can be adjusted.

Qwest TELRIC studies identify recurring and nonrecurring costs. *Recurring costs* are the ongoing costs associated with providing a network element. Recurring costs are generally investment-related and include both capital costs and operating expenses. These costs are often presented as a cost per month or per unit of usage (e.g., minute of use) and are incurred throughout the time period the network element is provided to a customer. *Nonrecurring costs* are the one-time costs that are incurred at the time a customer establishes, disconnects or changes service. These costs normally result from a customer order, and are predominantly labor-related.

The Qwest recurring and nonrecurring TELRIC studies identify costs on a unitized basis and disaggregates the cost results into the following components:

Total Direct Costs are the forward-looking costs that are caused by offering the network element in the long run. These costs would not be incurred if the network elements were not offered. Total Direct Costs reflect the per-unit forward looking cost associated with providing the entire network element in the most efficient manner, holding constant the production of all other network elements produced by the firm. For recurring element costs Total Direct Costs include the capital costs (e.g., depreciation, return, taxes) and maintenance costs associated with the investment required to provision a network element, along with other network element-specific costs such as product management expense. For non-recurring costs, Total Direct Costs include the labor-related expenses associated with the provision of a network element, along with other network element-specific costs such as product management expense.

Directly Attributed Costs include network administration and engineering costs and various administrative costs such as the cost of general-purpose computers and accounting and finance expenses. These costs are not directly associated with a

NOTICE
The information contained herein is confidential and proprietary and should not be disclosed to unauthorized persons. It is meant for use by representatives of U S WEST Communications only.

specific network element. However, these costs vary with the provision of all network elements, and are not common to the entire firm.

Total Element Long Run Incremental Costs (TELRIC) represent the sum of Total Direct Costs and Directly Attributed Costs. This measure of costs includes the forward-looking costs incurred in the provision of a network element. This measure of costs is consistent with TELRIC as defined by the FCC.

Common Costs are associated with the enterprise as a whole. These costs do vary based on the total size of the firm, but do not vary with the provisioning of individual network elements. These costs are avoidable only with the elimination of the entire firm, and are sometimes referred to as *general overhead costs.*

Fully Allocated Costs represent the sum of Total Element Long Run Incremental Cost plus Common Costs (TELRIC + CC).

NOTICE
The information contained herein is confidential and proprietary and should not be disclosed to unauthorized persons. It is meant for use by representatives of U S WEST Communications only.

E. STUDY ASSUMPTIONS

1) Costs are based on a least cost scorched node scenario and represent the cost of fully replacing the network required to provision the service, beginning from the existing grid of network nodes used by Qwest today.

2) All network investments are forward-looking:

3) All costs displayed are a 2001 level.

4) Cost results are based on Prescribed Lives and 10.14 % COM

NOTICE
The information contained herein is confidential and proprietary and should not be disclosed to unauthorized persons. It is meant for use by representatives of U S WEST Communications only.

Study Name	*SUB-LOOP ELEMENTS*	
Study Requester	*Tony Romano*	
Type of Study	*TELRIC*	
Study ID	*5362*	
Cost Factor Group	*Interconnection*	
Study Applications		
Completion Date	*July 05, 2001*	
Cost Analyst	*David Workman*	
Study Review	**Reviewer**	**Date**
		July 05, 2001
Models Used	**Model**	**Version**
	Wholesale Cost Program	*2.07*
	Cost Factor Databases	*00SD02E*
	Cost Factors Model (TELRIC)	*00V2*
Cost Factors Used	**Factor**	**Effective Date**
	Capital Recovery	*01/01*
	Maintenance	*01/01*
	Ad Valorem	*01/01*
	COE Land & Bldg	*01/01*
	Directly Assigned Factors	*01/01*
	Billing & Collection (PL)	*01/01*
	Directly Attributable Factors	*01/01*
	Common	*01/01*
	Cost Of Money	*10.14%*
Inflation		
Major Cost Drivers		

Parameter File: F:\R980000\-SD_SubLoopDist\SLDjuly01\SLDsd.xls, Sheet "WINPC3 Parameters"
State(s): SD
Database Vintage: 00SD02E
Factors For: Interconnection
Report Type: ICM Format
Decimal Places: 2
Costs Format: Monthly
Group Totals: Yes
ACF Input: F:\R980000\-SD_SubLoopDist\SLDjuly01\SLDsd.xls, Sheet "WINPC3 ACF Inputs"
ACF Output: F:\R980000\-SD_SubLoopDist\SLDjuly01\SLDsd.xls, Sheet "WINPC3 ACF Outputs"
Investment: F:\R980000\-SD_SubLoopDist\SLDjuly01\SLDsd.xls, Sheet "WINPC3 Investments"
Output: F:\R980000\-SD_SubLoopDist\SLDjuly01\SLDsd.xls, Sheet "WINPC3 Output"

State: South Dakota

Description	USOC	Loaded Investment	Direct Expense	Total Direct	Network Support	Directly ttributed	TELRIC	Common	TELRIC + Common
BUILDING CABLE		$29.47	$0.02	$0.46	$0.03	$0.11	$0.57	$0.03	$0.60
DISTRIBUTION - AVERAGE		$861.48	$0.02	$15.27	$0.86	$3.62	$18.89	$0.85	$19.74
DISTRIBUTION - ZONE 1		$675.27	$0.02	$11.90	$0.67	$2.82	$14.72	$0.66	$15.38
DISTRIBUTION - ZONE 2		$825.84	$0.02	$14.61	$0.82	$3.46	$18.07	$0.82	$18.88
DISTRIBUTION - ZONE 3		$987.16	$0.02	$17.55	$0.99	$4.16	$21.71	$0.98	$22.69

Row	7/5/01 12:43 PM South Dakota	Source or Calculation	Factor Value	BUILDING CABLE	DISTRIBUTION - AVERAGE	DISTRIBUTION - ZONE 1	DISTRIBUTION - ZONE 2	DISTRIBUTION - ZONE 3
			A	B	C	D	E	F
1	Investment	sl r"Total" cD		29.47	861.48	675.27	825.84	987.16
2								
3	***Investment Based Costs***	***sl r"Total" cK***		0.43	14.65	11.41	14.01	16.84
4								
5	Direct Expenses			0.02	0.02	0.02	0.02	0.02
6	Miscellaneous Expenses			0.00	0.00	0.00	0.00	0.00
7	Billing & Collection - PL	cA*(r8-r6)	0.004304	0.00	0.06	0.05	0.06	0.07
8	***Investment Based + Direct Costs***			0.45	14.73	11.48	14.09	16.93
9								
10	***Directly Assigned***							
11	Product Management Expense	cA*(r8-r6)	0.025565	0.01	0.38	0.29	0.36	0.43
12	Sales Expense	cA*(r8-r6)	0.009225	0.00	0.14	0.11	0.13	0.16
13	Product Advertising Expense	cA*(r8-r6)	0.000000	0.00	0.00	0.00	0.00	0.00
14	Business Fees (Other Operating Taxes)	cA*(Sum(r8:r13)-r6)	0.002025	0.00	0.03	0.02	0.03	0.04
15	***Directly Assigned Costs***	***Sum r11:r14***		0.02	0.54	0.42	0.52	0.62
16								
17	***Total Direct Costs***	***r8 + r15***		0.46	15.27	11.90	14.61	17.55
18								
19	***Directly Attributed***							
20	Network Operations	cA*(r17-r6)	0.040880	0.02	0.62	0.49	0.60	0.72
21	Network Support Assets	cA*(r17-r6)	0.015364	0.01	0.23	0.18	0.22	0.27
22	General Support Assets	cA*(r17-r6)	0.069508	0.03	1.06	0.83	1.02	1.22
23	General Purpose Computers	cA*(r17-r6)	0.034714	0.02	0.53	0.41	0.51	0.61
24	Uncollectible	cA*(r17-r6)	0.000401	0.00	0.01	0.00	0.01	0.01
25	Accounting & Finance Expense	cA*(r17-r6)	0.008839	0.00	0.13	0.11	0.13	0.16
26	Human Resources Expense	cA*(r17-r6)	0.008145	0.00	0.12	0.10	0.12	0.14
27	Information Management Expense	cA*(r17-r6)	0.057009	0.03	0.87	0.68	0.83	1.00
28	Intangibles	cA*(r17-r6)	0.002091	0.00	0.03	0.02	0.03	0.04
29	***Directly Attributed Costs***	***Sum r20:r28***		0.11	3.62	2.82	3.46	4.16
30								
31	***TELRIC***	***r17 + r29***		0.57	18.89	14.72	18.07	21.71
32								
33	***Common***							
34	Executive Expense	cA*(r31-r6)	0.007805	0.00	0.15	0.11	0.14	0.17
35	Planning Expense	cA*(r31-r6)	0.000580	0.00	0.01	0.01	0.01	0.01
36	External Relations Expense	cA*(r31-r6)	0.013029	0.01	0.25	0.19	0.24	0.28
37	Legal Expense	cA*(r31-r6)	0.006148	0.00	0.12	0.09	0.11	0.13
38	Other Procurement Expense	cA*(r31-r6)	0.002359	0.00	0.04	0.03	0.04	0.05
39	Research & Development Expense	cA*(r31-r6)	0.000036	0.00	0.00	0.00	0.00	0.00
40	Other General and Admin Expense	cA*(r31-r6)	0.015212	0.01	0.29	0.22	0.27	0.33
41	***Common Costs***	***Sum r34:r40***		0.03	0.85	0.66	0.82	0.98
42								
43	***TELRIC + Common Costs***	***r31 + r41***		0.60	19.74	15.38	18.88	22.69

7/5/01
South Dakota

SUB-LOOP ELEMENTS

Acct	FRC	Account Name	Investment	Depreciation	Cost Of Money	Income Tax	Ad Valorem	Maintenance	Switch RTU	Total Capital Costs
BUILDING CABLE										
2426.1	62C	Intrabuilding Network Cable - Metallic	29.47	0.15	0.14	0.05	0.02	0.06	0.00	0.43
2124	2124	General Purpose Computers	0.00	0.00	0.00	0.00	0.00	0.00	0.00	0.00
		Total	**29.47**	**0.15**	**0.14**	**0.05**	**0.02**	**0.06**	**0.00**	**0.43**
DISTRIBUTION - AVERAGE										
2411	1C	Poles	19.99	0.20	0.06	0.02	0.01	0.05	0.00	0.36
2421.11,.21	52C	Aerial Cable - Metallic	37.58	0.33	0.17	0.06	0.03	0.41	0.00	1.00
2431	3C	Aerial Wire	1.24	0.03	0.01	0.00	0.00	0.00	0.00	0.04
2422.11,.21	5C	Underground Cable - Metallic	4.14	0.03	0.02	0.01	0.00	0.01	0.00	0.07
2423.11,.21	45C	Buried Cable - Metallic	678.85	3.45	3.23	1.22	0.49	2.70	0.00	11.08
2426.1	62C	Intrabuilding Network Cable - Metallic	14.08	0.07	0.07	0.03	0.01	0.03	0.00	0.21
2423.11	35C	Buried Cable - Drop	89.71	0.46	0.43	0.16	0.06	0.36	0.00	1.46
2421.11	42C	Aerial Cable - Drop	15.90	0.14	0.07	0.03	0.01	0.17	0.00	0.42
2124	2124	General Purpose Computers	0.00	0.00	0.00	0.00	0.00	0.00	0.00	0.00
		Total	**861.48**	**4.71**	**4.06**	**1.53**	**0.62**	**3.73**	**0.00**	**14.65**
DISTRIBUTION - ZONE 1										
2411	1C	Poles	13.56	0.14	0.04	0.02	0.01	0.04	0.00	0.24
2421.11,.21	52C	Aerial Cable - Metallic	26.12	0.23	0.12	0.04	0.02	0.29	0.00	0.70
2431	3C	Aerial Wire	0.22	0.01	0.00	0.00	0.00	0.00	0.00	0.01
2422.11,.21	5C	Underground Cable - Metallic	5.80	0.04	0.03	0.01	0.00	0.01	0.00	0.10
2423.11,.21	45C	Buried Cable - Metallic	528.45	2.68	2.51	0.95	0.38	2.10	0.00	8.63
2426.1	62C	Intrabuilding Network Cable - Metallic	20.03	0.10	0.10	0.04	0.01	0.04	0.00	0.29
2423.11	35C	Buried Cable - Drop	69.10	0.35	0.33	0.12	0.05	0.27	0.00	1.13
2421.11	42C	Aerial Cable - Drop	12.00	0.11	0.05	0.02	0.01	0.13	0.00	0.32
2124	2124	General Purpose Computers	0.00	0.00	0.00	0.00	0.00	0.00	0.00	0.00
		Total	**675.27**	**3.66**	**3.18**	**1.20**	**0.48**	**2.88**	**0.00**	**11.41**
DISTRIBUTION - ZONE 2										
2411	1C	Poles	18.16	0.19	0.06	0.02	0.01	0.05	0.00	0.32
2421.11,.21	52C	Aerial Cable - Metallic	34.57	0.30	0.16	0.06	0.02	0.38	0.00	0.92
2431	3C	Aerial Wire	0.69	0.02	0.01	0.00	0.00	0.00	0.00	0.02
2422.11,.21	5C	Underground Cable - Metallic	4.35	0.03	0.02	0.01	0.00	0.01	0.00	0.07
2423.11,.21	45C	Buried Cable - Metallic	654.00	3.32	3.11	1.18	0.47	2.60	0.00	10.67
2426.1	62C	Intrabuilding Network Cable - Metallic	14.76	0.08	0.07	0.03	0.01	0.03	0.00	0.22
2423.11	35C	Buried Cable - Drop	84.45	0.43	0.40	0.15	0.06	0.34	0.00	1.38
2421.11	42C	Aerial Cable - Drop	14.87	0.13	0.07	0.03	0.01	0.16	0.00	0.40

7/5/01
South Dakota

SUB-LOOP ELEMENTS

Acct	FRC	Account Name	Investment	Depreciation	Cost Of Money	Income Tax	Ad Valorem	Maintenance	Switch RTU	Total Capital Costs
2124	2124	General Purpose Computers	0.00	0.00	0.00	0.00	0.00	0.00	0.00	0.00
		Total	**825.84**	**4.49**	**3.89**	**1.47**	**0.59**	**3.57**	**0.00**	**14.01**

DISTRIBUTION - ZONE 3

2411	1C	Poles	24.57	0.25	0.08	0.03	0.02	0.07	0.00	0.44
2421.11,.21	52C	Aerial Cable - Metallic	45.65	0.40	0.21	0.08	0.03	0.50	0.00	1.22
2431	3C	Aerial Wire	2.07	0.05	0.02	0.01	0.00	0.00	0.00	0.07
2422.11,.21	5C	Underground Cable - Metallic	3.07	0.02	0.01	0.01	0.00	0.01	0.00	0.05
2423.11,.21	45C	Buried Cable - Metallic	778.77	3.95	3.70	1.40	0.56	3.10	0.00	12.71
2426.1	62C	Intrabuilding Network Cable - Metallic	10.25	0.05	0.05	0.02	0.01	0.02	0.00	0.15
2423.11	35C	Buried Cable - Drop	104.15	0.53	0.50	0.19	0.07	0.41	0.00	1.70
2421.11	42C	Aerial Cable - Drop	18.64	0.16	0.08	0.03	0.01	0.20	0.00	0.50
2124	2124	General Purpose Computers	0.00	0.00	0.00	0.00	0.00	0.00	0.00	0.00
		Total	**987.16**	**5.42**	**4.65**	**1.76**	**0.71**	**4.31**	**0.00**	**16.84**

	A	B	C	D	E	F	G	H
1	Investment							
2	STUDY	SUB-LOOP ELEMENTS						SOURCE
3	DATE	7/5/01						
4	GROUP	BUILDING CABLE						
5	LOADED	SD	29.4671716807	0.	0.	62C	BLD CABLE	Unbundled-Subloop Tab
6	LOADED	SD	0.000112	0.	0.	2124	Billing and Collection	Billing & Collection Tab
7	COMMON	SD	0.016467	0.	0.		Billing and Collection	Billing & Collection Tab
8	GROUP	DISTRIBUTION - AVERAGE						
9	LOADED	SD	$19.99	0.	0.	1C	POLES	Unbundled-Subloop Tab
10	LOADED	SD	37.58	0.	0.	52C	AR CABLE	Unbundled-Subloop Tab
11	LOADED	SD	1.24	0.	0.	3C	C WIRE	Unbundled-Subloop Tab
12	LOADED	SD	4.14	0.	0.	5C	UG CABLE	Unbundled-Subloop Tab
13	LOADED	SD	678.85	0.	0.	45C	BUR CABLE	Unbundled-Subloop Tab
14	LOADED	SD	14.08	0.	0.	62C	BLD CABLE	Unbundled-Subloop Tab
15	LOADED	SD	89.71	0.	0.	35C	BUR DROP	Unbundled-Subloop Tab
16	LOADED	SD	15.90	0.	0.	42C	AR DROP	Unbundled-Subloop Tab
17	LOADED	SD	0.000112	0.	0.	2124	Billing and Collection	Billing & Collection Tab
18	COMMON	SD	0.016467	0.	0.		Billing and Collection	Billing & Collection Tab
19	GROUP	DISTRIBUTION - ZONE 1						
20	LOADED	SD	$13.56	0.	0.	1C	POLES	Unbundled-Subloop Tab
21	LOADED	SD	26.12	0.	0.	52C	AR CABLE	Unbundled-Subloop Tab
22	LOADED	SD	0.22	0.	0.	3C	C WIRE	Unbundled-Subloop Tab
23	LOADED	SD	5.80	0.	0.	5C	UG CABLE	Unbundled-Subloop Tab
24	LOADED	SD	528.45	0.	0.	45C	BUR CABLE	Unbundled-Subloop Tab
25	LOADED	SD	20.03	0.	0.	62C	BLD CABLE	Unbundled-Subloop Tab
26	LOADED	SD	69.10	0.	0.	35C	BUR DROP	Unbundled-Subloop Tab
27	LOADED	SD	12.00	0.	0.	42C	AR DROP	Unbundled-Subloop Tab
28	LOADED	SD	0.000112	0.	0.	2124	Billing and Collection	Billing & Collection Tab
29	COMMON	SD	0.016467	0.	0.		Billing and Collection	Billing & Collection Tab
30	GROUP	DISTRIBUTION - ZONE 2						
31	LOADED	SD	$18.16	0.	0.	1C	POLES	Unbundled-Subloop Tab
32	LOADED	SD	34.57	0.	0.	52C	AR CABLE	Unbundled-Subloop Tab

	A	B	C	D	E	F	G	H
33	LOADED	SD	0.69	0.	0.	3C	C WIRE	Unbundled-Subloop Tab
34	LOADED	SD	4.35	0.	0.	5C	UG CABLE	Unbundled-Subloop Tab
35	LOADED	SD	654.00	0.	0.	45C	BUR CABLE	Unbundled-Subloop Tab
36	LOADED	SD	14.76	0.	0.	62C	BLD CABLE	Unbundled-Subloop Tab
37	LOADED	SD	84.45	0.	0.	35C	BUR DROP	Unbundled-Subloop Tab
38	LOADED	SD	14.87	0.	0.	42C	AR DROP	Unbundled-Subloop Tab
39	LOADED	SD	0.000112	0.	0.	2124	Billing and Collection	Billing & Collection Tab
40	COMMON	SD	0.016467	0.	0.		Billing and Collection	Billing & Collection Tab
41	GROUP	DISTRIBUTION - ZONE 3						
42	LOADED	SD	$24.57	0.	0.	1C	POLES	Unbundled-Subloop Tab
43	LOADED	SD	45.65	0.	0.	52C	AR CABLE	Unbundled-Subloop Tab
44	LOADED	SD	2.07	0.	0.	3C	C WIRE	Unbundled-Subloop Tab
45	LOADED	SD	3.07	0.	0.	5C	UG CABLE	Unbundled-Subloop Tab
46	LOADED	SD	778.77	0.	0.	45C	BUR CABLE	Unbundled-Subloop Tab
47	LOADED	SD	10.25	0.	0.	62C	BLD CABLE	Unbundled-Subloop Tab
48	LOADED	SD	104.15	0.	0.	35C	BUR DROP	Unbundled-Subloop Tab
49	LOADED	SD	18.64	0.	0.	42C	AR DROP	Unbundled-Subloop Tab
50	LOADED	SD	0.000112	0.	0.	2124	Billing and Collection	Billing & Collection Tab
51	COMMON	SD	0.016467	0.	0.		Billing and Collection	Billing & Collection Tab

	A	B
1	Parameter	
2	SD	
3	7	
4	2	
5	Monthly	12
6	Yes	
7	No	
8		
9	11	
10	5362	

	A	B	C	D	E	F	G	H	I	J	K	L	M
1	ACFIN												
2	00SD02E												
3	20C	DEPR-AVG	COM-AVG	IT-AVG	MTNC-TOT	ADVAL	BLDG	LAND	PRODMAN	SALESEXP	ADVER	BF	NTWKOP
4	110C	DEPR-AVG	COM-AVG	IT-AVG	MTNC-TOT	ADVAL	BLDG	LAND	PRODMAN	SALESEXP	ADVER	BF	NTWKOP
5	1C	DEPR-AVG	COM-AVG	IT-AVG	MTNC-TOT	ADVAL	BLDG	LAND	PRODMAN	SALESEXP	ADVER	BF	NTWKOP
6	52C	DEPR-AVG	COM-AVG	IT-AVG	MTNC-TOT	ADVAL	BLDG	LAND	PRODMAN	SALESEXP	ADVER	BF	NTWKOP
7	42C	DEPR-AVG	COM-AVG	IT-AVG	MTNC-TOT	ADVAL	BLDG	LAND	PRODMAN	SALESEXP	ADVER	BF	NTWKOP
8	5C	DEPR-AVG	COM-AVG	IT-AVG	MTNC-TOT	ADVAL	BLDG	LAND	PRODMAN	SALESEXP	ADVER	BF	NTWKOP
9	35C	DEPR-AVG	COM-AVG	IT-AVG	MTNC-TOT	ADVAL	BLDG	LAND	PRODMAN	SALESEXP	ADVER	BF	NTWKOP
10	62C	DEPR-AVG	COM-AVG	IT-AVG	MTNC-TOT	ADVAL	BLDG	LAND	PRODMAN	SALESEXP	ADVER	BF	NTWKOP
11	45C	DEPR-AVG	COM-AVG	IT-AVG	MTNC-TOT	ADVAL	BLDG	LAND	PRODMAN	SALESEXP	ADVER	BF	NTWKOP
12	3C	DEPR-AVG	COM-AVG	IT-AVG	MTNC-TOT	ADVAL	BLDG	LAND	PRODMAN	SALESEXP	ADVER	BF	NTWKOP
13	2124	DEPR-AVG	COM-AVG	IT-AVG	MTNC-TOT	ADVAL	BLDG	LAND	PRODMAN	SALESEXP	ADVER	BF	NTWKOP

	N	O	P	Q	R	S	T	U	V	W	X	Y	Z	AA
1														
2														
3	NTWKST	GENLST	COMPTR	UNCOLL	ACCNT	HREXP	INTAN	EXEC	PLAN	EXTERN	INFOR	LEGAL	PROCR	RDEXP
4	NTWKST	GENLST	COMPTR	UNCOLL	ACCNT	HREXP	INTAN	EXEC	PLAN	EXTERN	INFOR	LEGAL	PROCR	RDEXP
5	NTWKST	GENLST	COMPTR	UNCOLL	ACCNT	HREXP	INTAN	EXEC	PLAN	EXTERN	INFOR	LEGAL	PROCR	RDEXP
6	NTWKST	GENLST	COMPTR	UNCOLL	ACCNT	HREXP	INTAN	EXEC	PLAN	EXTERN	INFOR	LEGAL	PROCR	RDEXP
7	NTWKST	GENLST	COMPTR	UNCOLL	ACCNT	HREXP	INTAN	EXEC	PLAN	EXTERN	INFOR	LEGAL	PROCR	RDEXP
8	NTWKST	GENLST	COMPTR	UNCOLL	ACCNT	HREXP	INTAN	EXEC	PLAN	EXTERN	INFOR	LEGAL	PROCR	RDEXP
9	NTWKST	GENLST	COMPTR	UNCOLL	ACCNT	HREXP	INTAN	EXEC	PLAN	EXTERN	INFOR	LEGAL	PROCR	RDEXP
10	NTWKST	GENLST	COMPTR	UNCOLL	ACCNT	HREXP	INTAN	EXEC	PLAN	EXTERN	INFOR	LEGAL	PROCR	RDEXP
11	NTWKST	GENLST	COMPTR	UNCOLL	ACCNT	HREXP	INTAN	EXEC	PLAN	EXTERN	INFOR	LEGAL	PROCR	RDEXP
12	NTWKST	GENLST	COMPTR	UNCOLL	ACCNT	HREXP	INTAN	EXEC	PLAN	EXTERN	INFOR	LEGAL	PROCR	RDEXP
13	NTWKST	GENLST	COMPTR	UNCOLL	ACCNT	HREXP	INTAN	EXEC	PLAN	EXTERN	INFOR	LEGAL	PROCR	RDEXP

	AB	AC
1		
2		
3	GENL	BC
4	GENL	BC
5	GENL	BC
6	GENL	BC
7	GENL	BC
8	GENL	BC
9	GENL	BC
10	GENL	BC
11	GENL	BC
12	GENL	BC
13	GENL	BC

	A	B	C	D	E	F	G	H	I	J	K	L	M
1	ACFOUT	Factors For: Interconnection											
2	*-Run Done With Database Vintage: 00SD02E, Dated: 02/15/01*												
3	*-Wholesale Cost Program (TELRIC) Data Base released 02/01 (00SD02E).*												
4	*-Factors loaded from Factors Model (Expense Module), Version 00V2.*												
5	*-CAPITAL RECOVERY factors released 01/01 and based on 10.14% Cost*												
6	*Of Money. No 1-10 year factors developed.*												
7	*-MAINTENANCE factors released 01/01.*												
8	*-RTU factors released 02/01.*												
9	*-AD VALOREM Tax released 01/01.*												
10	*-DIRECTLY ASSIGNED expense factors released 01/01.*												
11	*-BUSINESS FEES released 01/01.*												
12	*-COMMON Expense released 01/01.*												
13	*-TOTAL INSTALLED FACTORS (TIF) released 01/01.*												
14	*-POWER investment factors released 01/01.*												
15	*-SALES TAX released 01/01.*												
16	*-TELCO Engineering factors released 01/01.*												
17	*-INTEREST DURING CONSTRUCTION released 01/01.*												
18	*-LAND AND BUILDING factors released 01/01.*												
19	*-DIRECTLY ATTRIBUTABLE expense factors released 01/01.*												
20	*-SALES EXPENSE factor released 01/01.*												
21	*-PRODUCT MANAGEMENT factor released 01/01.*												
22	*-BILLING & COLLECTION factor released 01/01.*												
23	*-PROVISIONING factors released 01/01.*												
24	*-TELEPHONE PLANT INDEX released 01/01.*												
25	*-STRUCTURE RATIO released 01/01.*												
26													
27													
28													
29													
30													
31													
32													
33													

	A	B	C	D	E	F	G	H	I	J	K	L	M	N	O
34															
35	***State:***														
36															
37															
38	State:	South Dakota													
39															
40	**ACCOUNTS**	**DEPR-AVG**	**COM-AVG**	**IT-AVG**	**MTNC-TOT**	**ADVAL**	**BLDG**	**LAND**	**PRODMAN**	**SALESEXP**	**ADVER**	**BF**	**NTWKOP**	**NTWKST**	**GENLST**
41	20C	0.000000	0.096506	0.036495	0.022353	0.008613	0.000000	0.000000	0.025565	0.009225	0.000000	0.002025	0.040880	0.015364	0.069508
42	110C	0.025821	0.074869	0.028313	0.022353	0.008613	0.000000	0.000000	0.025565	0.009225	0.000000	0.002025	0.040880	0.015364	0.069508
43	1C	0.122572	0.036893	0.013952	0.032460	0.008613	0.000000	0.000000	0.025565	0.009225	0.000000	0.002025	0.040880	0.015364	0.069508
44	52C	0.105201	0.054376	0.020563	0.131511	0.008613	0.000000	0.000000	0.025565	0.009225	0.000000	0.002025	0.040880	0.015364	0.069508
45	42C	0.105201	0.054376	0.020563	0.131511	0.008613	0.000000	0.000000	0.025565	0.009225	0.000000	0.002025	0.040880	0.015364	0.069508
46	5C	0.090987	0.056203	0.021254	0.024153	0.008613	0.000000	0.000000	0.025565	0.009225	0.000000	0.002025	0.040880	0.015364	0.069508
47	35C	0.060902	0.057059	0.021578	0.047717	0.008613	0.000000	0.000000	0.025565	0.009225	0.000000	0.002025	0.040880	0.015364	0.069508
48	62C	0.062692	0.058372	0.022074	0.023289	0.008613	0.000000	0.000000	0.025565	0.009225	0.000000	0.002025	0.040880	0.015364	0.069508
49	45C	0.060902	0.057059	0.021578	0.047717	0.008613	0.000000	0.000000	0.025565	0.009225	0.000000	0.002025	0.040880	0.015364	0.069508
50	3C	0.274000	0.091689	0.034674	0.010002	0.008613	0.000000	0.000000	0.025565	0.009225	0.000000	0.002025	0.040880	0.015364	0.069508
51	2124	0.164850	0.047620	0.018008	0.000000	0.008613	0.000000	0.000000	0.025565	0.009225	0.000000	0.002025	0.040880	0.015364	0.069508

	P	Q	R	S	T	U	V	W	X	Y	Z	AA	AB	AC
34														
35														
36														
37														
38														
39														
40	COMPTR	UNCOLL	ACCNT	HREXP	INTAN	EXEC	PLAN	EXTERN	INFOR	LEGAL	PROCR	RDEXP	GENL	BC
41	0.034714	0.000401	0.008839	0.008145	0.002091	0.007805	0.000580	0.013029	0.057009	0.006148	0.002359	0.000036	0.015212	0.004304
42	0.034714	0.000401	0.008839	0.008145	0.002091	0.007805	0.000580	0.013029	0.057009	0.006148	0.002359	0.000036	0.015212	0.004304
43	0.034714	0.000401	0.008839	0.008145	0.002091	0.007805	0.000580	0.013029	0.057009	0.006148	0.002359	0.000036	0.015212	0.004304
44	0.034714	0.000401	0.008839	0.008145	0.002091	0.007805	0.000580	0.013029	0.057009	0.006148	0.002359	0.000036	0.015212	0.004304
45	0.034714	0.000401	0.008839	0.008145	0.002091	0.007805	0.000580	0.013029	0.057009	0.006148	0.002359	0.000036	0.015212	0.004304
46	0.034714	0.000401	0.008839	0.008145	0.002091	0.007805	0.000580	0.013029	0.057009	0.006148	0.002359	0.000036	0.015212	0.004304
47	0.034714	0.000401	0.008839	0.008145	0.002091	0.007805	0.000580	0.013029	0.057009	0.006148	0.002359	0.000036	0.015212	0.004304
48	0.034714	0.000401	0.008839	0.008145	0.002091	0.007805	0.000580	0.013029	0.057009	0.006148	0.002359	0.000036	0.015212	0.004304
49	0.034714	0.000401	0.008839	0.008145	0.002091	0.007805	0.000580	0.013029	0.057009	0.006148	0.002359	0.000036	0.015212	0.004304
50	0.034714	0.000401	0.008839	0.008145	0.002091	0.007805	0.000580	0.013029	0.057009	0.006148	0.002359	0.000036	0.015212	0.004304
51	0.034714	0.000401	0.008839	0.008145	0.002091	0.007805	0.000580	0.013029	0.057009	0.006148	0.002359	0.000036	0.015212	0.004304

To create Subloop investments in LoopMod2SD.xls:

Deaveraged Sub-loop Distribution:

1. Open the spreadsheet LoopMod2SD.xls

2. From the "Process Group" pull-down box, select the desired Zone to be processed.

3. Click on the "GO" button.

4. When the program has finished processing the zone, you will be taken to a summary sheet. Click on the "View Distribution SubLoop Summary Sheet" button.

5. Print or extract the results, then return to the "Previous Sheet" and then "Return to Start" to process another zone.

Building Cable and Wire and Statewide Subloop Distribution:

6. Return to start

7. From the "Process Group" pull-down box, select the desired "All Wire Centers"

8. Click on the "GO" button.

9. When the program has finished processing the zone, you will be taken to a summary sheet. Click on the "View Distribution SubLoop Summary Sheet" button.

10. Print or extract the results, then return to the "Previous Sheet" and then "Return to Start".

State: South Dakota
Output: Unbundled Loop

Feeder Model - 12 Kilofoot crossover
Process Group - Wire Center Detail
Pairs Per Site - Engineering Standard

Page 1
6/28/01
09:41:11
V 2.0

		1999 Average Investments				
Account	Description	Building Cable & Wire	State Average Sub-loop Distribution	Zone 1 Sub-loop Distribution	Zone 2 Sub-loop Distribution	Zone 3 Sub-loop Distribution
1C	Poles	$0.00	$19.99	$13.56	$18.16	$24.57
52C	Aerial Cable	0.00	37.58	26.12	34.57	45.65
3C	C Wire	0.00	1.24	0.22	0.69	2.07
4C	Conduit	0.00	0.00	0.00	0.00	0.00
5C	Underground Cable	0.00	4.14	5.80	4.35	3.07
45C	Buried Cable	0.00	678.85	528.45	654.00	778.77
62C	Building Cable	29.47	14.08	20.03	14.76	10.25
85C	Underground Fiber	0.00	0.00	0.00	0.00	0.00
257C	Pair Gain	0.00	0.00	0.00	0.00	0.00
845C	Buried Fiber	0.00	0.00	0.00	0.00	0.00
852C	Aerial Fiber	0.00	0.00	0.00	0.00	0.00
862C	Building Fiber	0.00	0.00	0.00	0.00	0.00
35C	Buried Drop	0.00	89.71	69.10	84.45	104.15
42C	Aerial Drop	0.00	15.90	12.00	14.87	18.64
	Total	$29.47	$861.48	$675.27	$825.84	$987.16

DG1
DG2
DG3
DG4
DG5
Total

Output of the Billing & Collection Model

BILLING AND COLLECTION: U S WEST COST RESULTS FOR MODEL INPUT
FACTORS INCLUDED: NONE
STUDY YEAR: 2000 - USW WHOLESALE
ACCOUNT - CRIS (LIS - LINK AND SPNP)

Unit: Per Electronically Billed Line	ACCOUNT
TOTAL	
INVESTMENT	$0.000112
EXPENSE	$0.016467

BILLING AND COLLECTION: U S WEST COST RESULTS FOR MODEL INPUT
FACTORS INCLUDED: NONE
STUDY YEAR: 2000 - USW
FACTOR DEVELOPMENT - IABS (LIS DEDICATED, COLOCATION, EICT)

Unit: Factor	0.004304

Sheet Updated on 6/14/2000

South Dakota Public Utilities Commission
Docket No. TC 01_____
Qwest Corporation

Attachment 7

Study No. 5453
Vertical Features Per Port

Qwest

QWEST

SOUTH DAKOTA

SGAT FEATURES

TELRIC

Study ID: 5453

RECURRING COST STUDY

JULY 2001



Market Services And Economic Analysis Organization

Table of Contents

Section	Topic	Page
1.	**Study Output**	
	Executive Summary	1
	Study Summary	13
	Port Cost Summary	14
	WINPC3 Output	15
	Total Product Costs	20
	Investment Cost Calculations	41
2.	**Cost Calculations**	
	Inputs	65
	SCM Features	68
	SCM Custom Ring: 2nd Line	72
	SCM Custom Ring: 3rd Line	73
	SCM UCD Features	74
	SCM Totals	75
	WINPC3 Investments	80
	WINPC3 Parameters	88
	WINPC3 ACF Inputs	89
	WINPC3 ACF Outputs	92
3.	**Source Data**	
	SCM Inputs	97
	SCM 2nd Line	104
	SCM 3rd Line	105
	SCM UCD Inputs	106
	DALPS 152 - Jan 01	107
	DALPS 178 - Jan 01	115
	DALPS 174 - Jan 01	116
	DALPS 144 - Jan 01	120
	WINPC3 Output - Values	121
	Line Totals - SD	126
	Model Descriptions	128
	Model Definitions	129
	ReadMe: SCM Instructions	131

Section 1

Study Output

A. PURPOSE, SCOPE, AND APPLICATION

The purpose of this study is to estimate the long run incremental costs Qwest will incur to provide features for use on a Line Port, as part of Local Interconnection Service for a Competitive Local Exchange Carrier (CLEC).

This study develops the unitized total element long run incremental cost (TELRIC).

Costs developed in this study are monthly recurring costs per port for the features available to an unbundled Analog Line Side Port.

B. DESCRIPTION OF SERVICE

Features are available to unbundled Analog Line Side Ports and the costs, therefore, are included in the port cost.

The following features are included in this study:

10XXX Direct Dialed Blocking
This option blocks directly dialed calls which use a carrier's CIC code in order to bypass the designated PIC'd carrier. This feature does not restrict all directly dialed calls.

Account Codes - per system
The Account Code feature allows customer to input numbers (# of digits depends upon switch type) designed for departmental or personal cost accounting and client billing.

Attendant Access Line - per station line
Allows a Centrex Attendant Line to receive dial "zero" calls.

Audible Message Waiting
When a user goes off hook a stutter dial tone is provided to indicate a message is waiting

Authorization Codes - per system
Allows a user having an assigned code to change restrictions originating on a subscriber line.

Automatic Callback Calling/Ring Again -
Provides an arrangement that permits a line user, when attempting an intercom (i.e., within the customer group) call to a busy line, to be automatically connected to that line when both the called and calling lines are subsequently idle.

Automatic Line
Allows equipped station to automatically place a call to a preassigned number by going off-hook.

Automatic Route Selection - Common Equip. per system
ARS is an optional feature, available where facilities permit that allows station users, by dialing a preselected code, to automatically select the preferred route subscribed for by a customer, for network calls. Alternate routing to other facilities subscribed for by the customer, is also provided. This arrangement is available for use with FX, WATS and MTS Network.

Blocking of pay per call services
Line restricted from making pay per call calls.

B. DESCRIPTION OF SERVICE

Bridging

Allows the Digital Electronic Telephone Set (DETS) user to bridge onto a currently active call by pressing the shared call appearance button.

Call Drop

The Drop feature allows the user to drop the last party that was added to the conference call. Also, this feature allows a user to disconnect a 2-party call.

Call Exclusion - Automatic

Automatic bridged call exclusion, automatic re-enable - For this privacy option, the initial privacy status for the CA is private. This mode allows any number of members to bridge onto the call after privacy has been explicitly released. Privacy can be restored by user control only. Hence, privacy need only be released once when a conference bridge of arbitrary size is being established.

Call Exclusion - Manual

This mode specifies the initial privacy status for the CA to be non-private. Bridging may occur at any time unless an active EKTS member explicitly invokes privacy on the call. The privacy can also be released by the user after it is invoked.

Call Forwarding Don't Answer - All Calls

Provides for forwarding of all calls to a preselected telephone number, when the called station does not answer after a predetermined number of ringing cycles.

Call Forwarding Don't Answer - Incoming Only

Provides for forwarding of incoming only calls to a preselected telephone number, when the called station does not answer after a predetermined number of ringing cycles.

Call Forwarding Incoming Only

ISDN Call Forwarding Incoming Only - Allows an ISDN port to forward calls to a user defined telephone number. Only calls originating from outside the business group will be transferred. The destination is changeable by the user. This feature is applicable to both circuit switched voice and circuit switched data call.

Call Forwarding Intra Group Only

Allows an ISDN port to forward calls to a user defined telephone number within the Business Group only. The destination is changeable by the user. This feature is applicable to both circuit switched voice and circuit switched data call.

Call Forwarding-Variable use with Remote Access

Remote Call Forwarding (RCF) provides the customer a local telephone number which establishes a presence in a community without having to have an office in that community. This service provides a telephone number to forward incoming calls to another telephone number. The feature is programmed in the RSF central office so calls going into the RCF telephone number are automatically forwarded to the destination telephone number. No physical location is needed.

Call Forwarding-Busy Line (Expanded)

Allows a customer to have an incoming call forwarded to another predetermined number in a different central office switch if the called number is busy.

B. DESCRIPTION OF SERVICE

Call Forwarding-Busy Line (External)

Allows a customer to have incoming calls forwarded to another predetermined number outside the customer's system within the same central office switch when the called number is busy.

Call Forwarding-Busy Line/Don't Answer (External)

Allows a customer to have incoming calls forwarded to another predetermined number outside the customer's system within the same central office switch when the called number is busy or if the customer does not answer after a preset number of rings.

Call Forwarding Busy Line - All Calls

Provides for forwarding of all calls to a preselected telephone number, when the called station is busy.

Call Forwarding Busy Line - Incoming Only

Provides for forwarding of incoming only calls to a preselected telephone number, when the called station is busy.

Call Forwarding Variable

Allows a user to automatically forward "all" calls to any other number.

Call Forwarding-Busy Line (Overflow)

Allows a customer to have incoming calls forwarded to another predetermined number within the customer's central office if the called number is busy.

Call Forwarding-Busy Line (Programmable)

Allows a customer to have incoming calls forwarded to another number when the called number is busy. The customer can activate and deactivate the forwarding feature by dialing a code as well as establish or change the number to which calls are forwarded.

Call Forwarding-Busy Line/Don't Answer (Expanded)

Allows a customer to have an incoming call forwarded to another predetermined number in a different central office switch if the called number is busy or if the customer does not answer after a preset number of rings.

Call Forwarding-Busy Line/Don't Answer (Overflow)

Allows a customer to have incoming calls forwarded to another predetermined number within the customer's central office if the called number is busy or if the customer does not answer after a preset number of rings.

Call Forwarding-Don't Answer

Allows a customer to have an incoming call forwarded to another predetermined number within the same central office switch if the customer does not answer after a preset number of rings.

Call Forwarding-Don't Answer (Expanded)

Allows a customer to have an incoming call forwarded to another predetermined number outside the serving central office switch if the customer does not answer after a preset number of rings.

Call Forwarding-Don't Answer (Programmable)

Allows a customer to have incoming calls forwarded to another number if the customer does not answer after a preset number of ringing cycles. The customer can activate and deactivate the forwarding by dialing a code as well as establish or change the number to which calls are forwarded.

B. DESCRIPTION OF SERVICE

Call Forwarding-Variable-No Call Completion Option

An option of Call Forwarding-Variable that allows a customer subscribing to that feature to activate it without completing a call to the forward-to number.

Call Hold

Allows a customer to hold any call in progress, by dialing a code.

Call Hold/3-Way/Call Transfer

User can connect a third line to an established connection. A user can depress the switchhook, or ISDN set feature button, and consult in private with a third party and return to the original call by using only one line. A user of a line can transfer any established call to another line within or outside the Centrex System.

Call Park (Basic - Store & Retrieve)

Allows a user to hold or "Park" a call by dialing a code that can be retrieved from any station by dialing another code.

Call Pickup

Enables a station user to answer calls directed to other specified stations by dialing a special code.

Call Transfer

Enables a customer to transfer an incoming call to a third party or add a third party to an existing call, forming a three party connection, and then to leave the connection without disconnecting the call.

Call Waiting Dial Originating

Provides the ability for the originating station to invoke call waiting tone on selected calls by dialing the dial call waiting access code followed by the extension number of the station to be call waited.

Call Waiting Indication - per timing state

Lamps are used to indicate that calls have been queued longer than a customer specified threshold. One to three lamps may be provided indicating different delay lengths.

Call Waiting Originating

Allows a calling station to direct a call waiting tone toward a busy called station within the same system.

Call Waiting Terminating - All Calls

Allows for a Centrex PRIME station user who is engaged in a telephone conversation to be alerted via an audible tone that a call is waiting on an all calls basis.

Call Waiting Terminating - Incoming Only

Allows for a Centrex PRIME station user who is engaged in a telephone conversation to be alerted via an audible tone that a call is waiting on an incoming only calls basis.

Call Waiting/Cancel Call Waiting

Call Waiting - Allows a customer engaged in telephone conversation to be notified when a third party is attempting to call the customer. The notification is an audible Call Waiting (CW) tone to the CW customer. Audible ring is returned to the third party. CW service provides a hold feature where the CW customer may flash the switch hook and alternate between the original and the second call.

Cancel Call Waiting - This is used in conjunction with the CW feature and allows the customer to cancel the operation of CW for one call. The customer dials a cancel call waiting code, obtains stutter tone, and places a call normally. While Cancel Call Waiting is invoked, incoming calls receive a normal busy signal.

B. DESCRIPTION OF SERVICE

Centrex Management System (CMS)

A computer software program that provides the customer access to their Centrex database for the purpose of general database inquiry, move, add, delete, and change of station lines and generate Basic Management Reports without having service orders issued.

Centrex Plus DID numbers per number

DID is a feature that allows an incoming toll or DDD call (not FX or WATS) to reach a specific PBX station line without attendant assistance. With DID, the SPCS seizes a DID trunk and outpulses the station line number to the PBX.

Centrex Plus to Centrex Plus

When a customer orders a DFI between any two Centrex systems, they must have station lines and usage (for non-blocked) or the equivalent number of station lines and NARS (for blocked) to match the number of voice connections on the DFI.

Centrex Plus to IC Carrier

When a customer orders a DFI between Centrex systems and an IC Carrier, they must have station lines and usage (for non-blocked) or the equivalent number of station lines and NARS (for blocked) to match the number of voice connections on the DFI.

Centrex Plus to PBX/Key Blocked

When a customer orders a DFI between Centrex systems and key/PBX, they must have the equivalent number of station lines and NARS (for blocked) to match the number of voice connections on the DFI.

Centrex Plus to PBX/Key Non-Blocked

When a customer orders a DFI between Centrex systemsand key/PBX, they must have station lines and usage (for nonblocked) to match the number of voice connections on the DFI.

CFDA Incoming Only

Provides for forwarding of incoming only calls to a preselected telephone number, when the called station does not answer after a predetermined number of ringing cycles.

CLASS Anonymous Call Rejection

Does not allow an incoming call to ring into a customer's home if the caller has blocked their name and number from being shown on the Caller ID unit. It also routes that call to an announcement in the central office.

CLASS Call Waiting ID

Allows a customer with Caller Identification to receive name and number information on a call that is waiting. The name and number are displayed on customer provided equipment.

CLASS Calling Name & Number

Allows for the automatic delivery of a calling party's name and telephone number (including nonpublished and nonlisted telephone numbers) to the called customer, which gives the called customer an opportunity to decide whether to answer the call immediately or not. The name and number are displayed on customer provided equipment.

CLASS Calling Number Delivery

Allows for the automatic delivery of a calling party's telephone number (including nonpublished and nonlisted telephone numbers) to the called customer, which gives the called customer an opportunity to decide whether to answer the call immediately or not. The number is displayed on customer provided equipment.

B. DESCRIPTION OF SERVICE

CLASS Calling Number Delivery Blocking

When a line is equipped with per line blocking, the name and number of that line will not be delivered to any subscriber of Caller ID.

CLASS Continuous Redial

Allows a customer to dial a code that will cause the feature to automatically redial the last number the customer dialed. If the called number is busy, the feature will redial the called number for a limited period of time. A tone alerts the customer when the called number becomes available.

CLASS Last Call Return

Allows a customer to dial a code that will cause the feature to automatically redial the number of the last incoming call to that line, whether the call was answered or not. The customer does not have to know the number of the calling party. If the calling party's number is blocked, by the calling party, the service will not return the call. If the called number is busy, the feature will redial the called number for a limited period of time. A tone alerts the customer when the called line is available.

CLASS Priority Calling

Allows a customer to assign a maximum of 15 callers' telephone numbers to a special list. The customer will hear a distinctive ring at the customer's location when calls are received from callers' numbers on that list.

CLASS Selective Call Forwarding

Allows a customer to specify a special list of a maximum of 15 telephone numbers. Incoming calls placed to the customer from telephone numbers on that list will automatically be forwarded to a predefined telephone number. All other calls will be handled normally.

CLASS Selective Call Rejection

Enables a customer to reject call attempts from up to 15 numbers of calling parties by dialing a code and the telephone numbers of calls to be rejected. Any call attempts to the customer from these numbers will be prevented from terminating to the customer and will instead be connected to an announcement informing the caller that the call is not presently being accepted by the called party.

Common Equipment per 1.544 Mbps facility (DS1)

Connects the DS1 interface to the Centrex switch.

Conference Calling - Meet Me

Provides the ability to establish - at a predetermined time - a conference of up to 30 members. The conferees can be internal or external to the Customer/Business Group, but one conference member must always be a Centrex Plus station or a trunk in the same group.

Conference Calling - Preset

A Preset Conference is established when a Centrex Plus station user dials the directory number associated with the conference circuit. It can also be established by a POTS line or an incoming trunk if the customer desires. Up to 25 preselected stations are rung simultaneously. The members may be internal, external or a combination of both. The ability to initiate a Preset Conference is established by the station class of service. As conferees answer their telephones, the conference begins. Unanswered numbers will continue to ring, but with no audible ringback to those already in place. As conferees answer and are cut into the conference, a warning tone is heard by those already conferenced.

Conference Calling - Station Dial

Allows a customer to establish a conference call with up to six conferees, including the originator. Conferees may be inside or outside the system.

B. DESCRIPTION OF SERVICE

Custom Ringing

A primary directory number (PDN) and up to three secondary directory numbers (SDN) are assigned to a subscriber's line. When the PDN is called, standard 1FR ringing is applied to the line. When a SDN is called, one of the following three special ringing patterns is applied:

- 2 long rings
- 2 short rings, 1 long ring
- 1 short ring, 1 long ring, 1 short ring

Data Call Protection

Provides a no double connect option to the line, protecting data calls from interruption.

Dir Sta Sel/Busy Lamp Fld per arrangement

Adds improved answering-position functions to the electronic set by providing busy lamp status and direct station selection.

Directed Call Pickup with Barge-in

Direct call pick-up with Barge In permits a user to dial a code and station number and pick up a call that has been answered or is ringing at another telephone, provided the rung telephone permits dial pick-up.

Directed Call Pickup without Barge-in

Permits a user to dial a code and a station number to pick up a call that is ringing at another station.

Distinctive Ring/Distinctive Call Waiting

Enables a station user to determine the source of an incoming call.

Distinctive Ringing

Enables a station user to determine the source of an incoming call.

EBS - Set Interface - per station line

The card provides the communication control for the electronic set and is required per set.

Executive Busy Override

Allows a station user to gain access to a busy station.

Expensive Route Warning Tone

Provides a warning tone to indicate the selection of an expensive route.

Facility Restriction Level - per system

Determines calling privilege level associated with each station line.

Feature Display

Allows the user of a Digital Electronic Telephone Set (DETS) with display capability a method of determining the features and call appearances that are assigned to the buttons on a station.

Group Intercom

The feature Group Intercom allows a station abbreviated dialing to other station members within the same Group Intercom group.

Hot Line - per line

Allows equipped station lines the ability to automatically place a call to a pre-assigned number by going off-hook.

Hunting: Multiposition Circular Hunting

Distributes incoming calls over a group of telephone numbers in the same office. Incoming calls are routed in a predetermined order beginning with the dial number. If no idle line found by the end of the group, hunting begins with the 1st line in the group and stops with the line just prior to the line with the dialed number. If no lines are idle, a busy tone is given.

B. DESCRIPTION OF SERVICE

Hunting: Multiposition Hunt Queuing

This is incremental to Multiposition Hunting and is needed for the call to go to an announcement or music when no idle line is found.

Hunting: Multiposition Series Hunting

Distributes incoming calls over a group of telephone numbers in the same office. Incoming calls are routed in a predetermined order beginning with the dial number. If no idle line found by the end of the group, a busy tone is given.

Hunting: Multiposition with Announcement in Queue

This is incremental to Multiposition Hunting (Series or Circular). When no idle line is found, the incoming call will go into queue - Announcement will be provided in queue.

Hunting: Multiposition with Music in Queue

This is incremental to Multiposition Hunting (Series or Circular). When no idle line is found, the incoming call will go into queue - Music will be provided in queue.

Incoming Calls Barred

Restricts the port to outgoing service only. Incoming service is prohibited.

International Direct Dial Blocking

This option blocks directly dialed international calls from being completed.

ISDN Short Hunt

Permits incoming calls to hunt over a set of directory number appearances search of an idle directory number on the Digital (N) Electronic Telephone Set (DETS).

Line Side Answer Supervision

This option sends an "off-hook" supervisory signal to the pay station over a compatible loop when the called party answers the call. This signals the Smartset to start timing/billing the call. When the called party disconnects, an "on-hook" signal is detected and the reverse battery signal is returned to normal, telling the smartset to stop the timing and billing of the call.

Loudspeaker Paging - per trunk group

This feature permits MDC stations to dial an access code to connect to loudspeaker paging equipment via a trunk connection only.

Make Busy Arrangements - per group

Group Make Busy provides a means of making all terminals in a Multiline hunt group appear busy to incoming calls. It allows the customer to busy out the terminals in the hunt group by operating a key (customer provided) at the customer premises.

Make Busy Arrangements - per line

Random Make Busy provides a means of making lines appear busy to incoming calls. Allows the customer to busy out a line or group of lines in the hunt group by operating a key (customer provided) at the customer premises.

Message Center - per main station line

Provides message center functionality to the electronic set. System users access the message center via dialing a code.

Message Waiting Indication A/V

- Audible Waiting Indication - when a user goes off hook a stutter dial tone is provided to indicate a message is waiting.
- Visual Waiting Indication - provides a message waiting indication on an electronic set via a message waiting lamp.

B. DESCRIPTION OF SERVICE

Message Waiting Visual
Provides a message waiting indication on an electronic set via a message waiting lamp.

Music On Hold - per system
Provides Music on Hold capability to the system.

Network Speed Call
Allows each station user access to a single list of 1,000 preprogrammed numbers which can be shared by all stations in the system (not customer changeable).

Night Service Arrangement
Allows any line in the Night Answer Group to be picked up by any other line of the system.

Outgoing Calls Barred
This option restricts the port to incoming service only. Outgoing service is prohibited.

Outgoing Trunk Queuing
When an eligible call placed by a station or an incoming trunk cannot be completed because an idle outgoing trunk is not available, it is given Off Hook queue tone or announcement and is then placed in an Off Hook queue for an outgoing trunk. When a trunk becomes available, the call will be completed in the usual manner."

Privacy Release
Permits a user to establish a conference call among MADN members and an outside party by pressing an assigned key or dialing a code.

Query Time
This feature provides the current time and date on an electronic set display.

Speed Call 30 Number
Provides the capability for a customer to place a call to a predetermined telephone number by dialing a two digit code.

Speed Call 8 Number
Provides the capability for a customer to place a call to a predetermined telephone number by dialing a one digit code.

Speed Calling 1 Digit Controller
Allows the user to dial a standard access code plus a 1 digit abbreviated code corresponding to a frequently called telephone number. These numbers can be changed by the controller.

Speed Calling 1 Digit User
Allows the user to dial a standard access code plus a 1 digit abbreviated code corresponding to a frequently called telephone number. These numbers can be changed by the individual user.

Speed Calling 1# List Individual
Allows caller to call preprogrammed numbers by dialing a 1 digit code.

Speed Calling 2 Digit Controller
A list consisting of up to 30 controller changeable telephone numbers. The digits assigned are from 20 through 49. The user is part of a group sharing the speed call list.
All lines in the system will share one list. One line will be designated as the "owner".
Owner only can establish and change numbers on list.

B. DESCRIPTION OF SERVICE

Speed Calling 2 Digit User

Individual station users sharing a list of 30, 50, Or 70 changeable telephone numbers.

Speed Calling 2# List Individual

Allows caller to call preprogrammed numbers by dialing a 2 digit code.

Station Camp-On Service - per main station+

Allows the electronic set user to call a busy line and place the caller on hold/camp against the busy party's line until they are free.

Station Message Detail Recording (SMDR)

SMDR provides detail on calls by station number that originate from a Centrex type common block. The station message detail may include: the calling station number, the called number, date, time of day, duration of call and carrier selected.

Three-Way Calling

Enables the customer to add a third party to an existing conversation without operator assistance. To add the third party, the customer flashes the switch hook once to place the second party on hold, receives a stutter dial tone, calls the third party's number, then flashes the switch to establish the three way connection.

Time and Date Display

The switch provides time and date to the station set. The Time and Date feature is available to attendant and station set users. To use this feature, the user presses the Time/Date button.

Time of Day Control for ARS

Provides a method for automatically changing the routing parameter according to a prespecified schedule.

Time of Day NCOS Update

Allows normal NCOS (Network Class of Service) values to be mapped on to new values that are based on time of day, day of the week, or day of the year.

Time of Day Routing - per line

Enables efficient use of facilities by allowing or denying route choices based on time of day.

Toll Restriction Service

Restricts port from making toll calls

Trunk Answer Any Station

(See Night Service Arrangement.)

Trunk Verification from Designated Station

Allows end users audible transmission level testing from selected trunks within a trunk group, limit of ten stations per system.

UCD in hunt group - per line

This is a type of hunting which provides for an even distribution of incoming calls among the available members of a hunt group. UCD hunt group includes Queuing, Music on Queue, and Delayed Announcement.

UCD with Music After Delay

For Centrex, caller hears music after delay announcement.

C. STUDY METHODOLOGY

The costs identified are direct costs which occur as a result of providing features. These include digital central office switch costs in the subscriber's serving wire center.

Central office switching feature costs are calculated by first determining incremental switching feature investments. These feature investments are obtained through the use of the Qwest Switching Cost Model (SCM) for digital stored program controlled central offices A detailed description of this program is provided in the model descriptions.

The switch investments include processor time, memory, and hardware appropriate for each feature. The investments are converted to monthly costs using monthly cost factors, e.g. land and building, which are applied through the use of the Windows Personal Cost Calculator (WINPC3) cost program.

The WINPC3 model develops Long Run Incremental Costs (LRIC) from investments and/or expenses associated with Qwest products and services. A detailed description of this program is provided in the workpapers.

The investments are converted to monthly costs using monthly cost factors, which are represented as investment based and expense based. Examples of investment based factors include Capital and Ad Valorem taxes. Capital costs consist of depreciation, income tax, and cost of money. Examples of expense based factors would include administration and business fee taxes.

D. DESCRIPTION OF LONG RUN INCREMENTAL COSTS

Total Element Long Run Incremental Cost (TELRIC) studies are performed by Qwest to estimate the economic cost of providing network elements. The Qwest TELRIC studies identify the forward-looking costs associated with the provision of the total quantity of a network element in the long run. The forward-looking Qwest TELRIC studies identify the costs that are likely to be incurred in the future, and consider the latest forward-looking technologies and methods of operation that are currently available. These studies are *not* embedded or historical, and do not measure the impact of prior investment decisions by the corporation. The Qwest TELRIC studies also identify the *long run* costs associated with providing a network element--reflecting a time period over which all inputs (including changes in the size of facilities, levels of investment, etc.) can be adjusted.

Qwest TELRIC studies identify recurring and nonrecurring costs. Recurring costs are the ongoing costs associated with providing a network element. Recurring costs are generally investment-related and include both capital costs and operating expenses. These costs are often presented as a cost per month or per unit of usage (e.g., minute of use) and are incurred throughout the time period the network element is provided to a customer. *Nonrecurring costs* are the

one-time costs that are incurred at the time a customer establishes, disconnects or changes service. These costs normally result from a customer order, and are predominantly labor-related.

The Qwest recurring and nonrecurring TELRIC studies identify costs on a unitized basis and disaggregates the cost results into the following components:

D. DESCRIPTION OF LONG RUN INCREMENTAL COSTS (Cont.)

Total Direct Costs are the forward-looking costs that are caused by offering the network element in the long run. These costs would not be incurred if the network elements were not offered. Total Direct Costs reflect the per-unit forward looking cost associated with providing the entire network element in the most efficient manner, holding constant the production of all other network elements produced by the firm. For recurring

element costs Total Direct Costs include the capital costs (e.g., depreciation, return, taxes) and maintenance costs associated with the investment required to provision a network, along with other network element-specific costs such as product management expense. For nonrecurring costs, Total Direct Costs include the labor-related expenses associated with the provision of a network element, along with other network element-specific costs such as product management expense.

Directly Attributed Costs include network administration and engineering costs and various administrative costs such as the cost of general-purpose computers and accounting and finance expenses. These costs are not directly associated with a specific network element. However, these costs vary with the provision of all network elements, and are not common to the entire firm.

Total Element Long Run Incremental Costs (TELRIC) represent the sum of Total Direct Costs and Directly Attributable Costs. This measure of costs includes the forward-looking costs incurred in the provision of a network element. This measure of costs is consistent with TELRIC as defined by the FCC.

Common Costs are associated with the enterprise as a whole. These costs do vary based on the total size of the firm, but do not vary with the provisioning of individual network elements. These costs are avoidable only with the elimination of the entire firm, and are sometimes referred to as *general overhead costs*.

Fully Allocated Costs represent the sum of Total Element Long Run Incremental Cost Cost plus Common Costs (TELRIC + CC).

E. STUDY ASSUMPTIONS

1. All network investments are forward looking.

2. Switch investments are weighted between three switch types.

3. All costs displayed are represented on a per line basis.

[redacted]

State: South Dakota

Source	Total Feature Costs	Category
Total Cost for SD	$ 155,492.17	
Total SD Lines from SCM 0201A	297,134	
Feature Cost per Port	**$ 0.52**	

Study Name	*SGAT FEATURES*	
Study Requester	*Doug Gollehon*	
Type of Study	*TELRIC*	
Study ID	*5453*	
Cost Factor Group	*Interconnection*	
Study Applications		
Completion Date	*July 12, 2001*	
Cost Analyst	*Dave Bacheldor*	
Study Review	**Reviewer**	**Date**
	Jim DiManna	*July 12, 2001*
Models Used	**Model**	**Version**
	Wholesale Cost Program	*2.07*
	Cost Factor Databases	*00SD02E*
	Cost Factors Model (TELRIC)	*00V2*
	SCM	*03/21/01 (Vintage 9.21)*
Cost Factors Used	**Factor**	**Effective Date**
	Capital Recovery	*01/01*
	Maintenance	*01/01*
	Ad Valorem	*01/01*
	COE Land & Bldg	*01/01*
	Directly Assigned Factors	*01/01*
	Directly Attributable Factors	*01/01*
	Common	*01/01*
	Cost Of Money	*10.14%*
Inflation		
Major Cost Drivers		

Parameter File: Y:\Backup Srvr\SGAT Features\South Dakota\Features in Port\SD SGAT Features 5453.xls, Sheet "WINPC3 Parameters"
State(s): SD
Database Vintage: 00SD02E
Factors For: Interconnection
Report Type: ICM Format
Decimal Places: 4
Costs Format: Monthly
Group Totals: Yes
ACF Input: Y:\Backup Srvr\SGAT Features\South Dakota\Features in Port\SD SGAT Features 5453.xls, Sheet "WINPC3 ACF Inputs"
ACF Output: Y:\Backup Srvr\SGAT Features\South Dakota\Features in Port\SD SGAT Features 5453.xls, Sheet "WINPC3 ACF Outputs"
Investment: Y:\Backup Srvr\SGAT Features\South Dakota\Features in Port\SD SGAT Features 5453.xls, Sheet "WINPC3 Investments"
Output: Y:\Backup Srvr\SGAT Features\South Dakota\Features in Port\SD SGAT Features 5453.xls, Sheet "WINPC3 Output"

State: South Dakota

Description	USOC	Loaded Investment	Direct Expense	Total Direct	Network Support	Directly Attributed	TELRIC	Common	TELRIC + Common
10XXX Direct Dialed Blocking		$0.0296	$0.0000	$0.0005	$0.0000	$0.0001	$0.0006	$0.0000	$0.0007
Account Codes - per system		$307.5790	$0.0000	$5.2875	$0.2974	$1.2529	$6.5404	$0.2954	$6.8358
Attendant Access Line - per station line		$0.2415	$0.0000	$0.0042	$0.0002	$0.0010	$0.0051	$0.0002	$0.0054
Audible Message Waiting		$2.2079	$0.0000	$0.0380	$0.0021	$0.0090	$0.0470	$0.0021	$0.0491
Authorization Codes - per system		$130.3588	$0.0000	$2.2410	$0.1260	$0.5310	$2.7720	$0.1252	$2.8972
Auto Callback		$0.2903	$0.0000	$0.0050	$0.0003	$0.0012	$0.0062	$0.0003	$0.0065
Automatic Line		$0.0000	$0.0000	$0.0000	$0.0000	$0.0000	$0.0000	$0.0000	$0.0000
Automatic Route Selection - Common Equip. per system		$87.2269	$0.0000	$1.4995	$0.0843	$0.3553	$1.8548	$0.0838	$1.9386
Blocking of pay per call services		$1.1789	$0.0000	$0.0203	$0.0011	$0.0048	$0.0251	$0.0011	$0.0262
Bridging		$0.0166	$0.0000	$0.0003	$0.0000	$0.0001	$0.0004	$0.0000	$0.0004
Call Drop		$0.0036	$0.0000	$0.0001	$0.0000	$0.0000	$0.0001	$0.0000	$0.0001
Call Exclusion - Automatic		$0.0001	$0.0000	$0.0000	$0.0000	$0.0000	$0.0000	$0.0000	$0.0000
Call Exclusion - Manual		$0.0001	$0.0000	$0.0000	$0.0000	$0.0000	$0.0000	$0.0000	$0.0000
Call Forward Don't Answer - All Calls		$2.4021	$0.0000	$0.0413	$0.0023	$0.0098	$0.0511	$0.0023	$0.0534
Call Forwarding Incoming Only		$0.2506	$0.0000	$0.0043	$0.0002	$0.0010	$0.0053	$0.0002	$0.0056
Call Forwarding Intra Group Only		$0.2123	$0.0000	$0.0036	$0.0002	$0.0009	$0.0045	$0.0002	$0.0047
Call Forwarding Variable Remote		$1.5558	$0.0000	$0.0267	$0.0015	$0.0063	$0.0331	$0.0015	$0.0346

State: South Dakota

Description	USOC	Loaded Investment	Direct Expense	Total Direct	Network Support	Directly Attributed	TELRIC	Common	TELRIC + Common
Call Forwarding: Busy Line (Expanded)		$0.7821	$0.0000	$0.0134	$0.0008	$0.0032	$0.0166	$0.0008	$0.0174
Call Forwarding: Busy Line (External)		$0.7821	$0.0000	$0.0134	$0.0008	$0.0032	$0.0166	$0.0008	$0.0174
Call Forwarding: Busy Line (External) Don't Answer		$3.1842	$0.0000	$0.0547	$0.0031	$0.0130	$0.0677	$0.0031	$0.0708
Call Forwarding: Busy Line (Overflow)		$0.7821	$0.0000	$0.0134	$0.0008	$0.0032	$0.0166	$0.0008	$0.0174
Call Forwarding: Busy Line (Overflow) Don't Answer		$3.1842	$0.0000	$0.0547	$0.0031	$0.0130	$0.0677	$0.0031	$0.0708
Call Forwarding: Busy Line (Programmable)		$1.0237	$0.0000	$0.0176	$0.0010	$0.0042	$0.0218	$0.0010	$0.0228
Call Forwarding: Busy Line/Don't Answer (Expanded)		$3.1842	$0.0000	$0.0547	$0.0031	$0.0130	$0.0677	$0.0031	$0.0708
Call Forwarding: Don't Answer		$2.4021	$0.0000	$0.0413	$0.0023	$0.0098	$0.0511	$0.0023	$0.0534
Call Forwarding: Don't Answer (Expanded)		$2.4021	$0.0000	$0.0413	$0.0023	$0.0098	$0.0511	$0.0023	$0.0534
Call Forwarding: Don't Answer (Programmable)		$2.1647	$0.0000	$0.0372	$0.0021	$0.0088	$0.0460	$0.0021	$0.0481
Call Forwarding: Variable		$1.1669	$0.0000	$0.0201	$0.0011	$0.0048	$0.0248	$0.0011	$0.0259
Call Forwarding: Variable - no call complete option		$1.1669	$0.0000	$0.0201	$0.0011	$0.0048	$0.0248	$0.0011	$0.0259
Call Hold		$0.3177	$0.0000	$0.0055	$0.0003	$0.0013	$0.0068	$0.0003	$0.0071
Call Hold/3-Way/Call Transfer		$10.5492	$0.0000	$0.1813	$0.0102	$0.0430	$0.2243	$0.0101	$0.2345
Call Park (Basic - Store & Retrieve)		$0.6943	$0.0000	$0.0119	$0.0007	$0.0028	$0.0148	$0.0007	$0.0154
Call Pickup		$0.2879	$0.0000	$0.0049	$0.0003	$0.0012	$0.0061	$0.0003	$0.0064
Call Transfer		$10.5492	$0.0000	$0.1813	$0.0102	$0.0430	$0.2243	$0.0101	$0.2345
Call Waiting Dial Originating		$0.4041	$0.0000	$0.0069	$0.0004	$0.0016	$0.0086	$0.0004	$0.0090
Call Waiting Indication - per timing state		$16.3899	$0.0000	$0.2818	$0.0158	$0.0668	$0.3485	$0.0157	$0.3643
Call Waiting Originating		$0.8381	$0.0000	$0.0144	$0.0008	$0.0034	$0.0178	$0.0008	$0.0186
Call Waiting Terminating - All Calls		$1.6806	$0.0000	$0.0289	$0.0016	$0.0068	$0.0357	$0.0016	$0.0374
Call Waiting Terminating - Incoming Only		$1.6806	$0.0000	$0.0289	$0.0016	$0.0068	$0.0357	$0.0016	$0.0374
Call Waiting/ Cancel Call Waiting		$2.6912	$0.0000	$0.0463	$0.0026	$0.0110	$0.0572	$0.0026	$0.0598
Centrex Management System (CMS)		$1.1349	$0.3524	$0.3887	$0.0219	$0.0921	$0.4808	$0.0217	$0.5026
Centrex Plus DID numbers per number		$1.6778	$0.0000	$0.0288	$0.0016	$0.0068	$0.0357	$0.0016	$0.0373
Centrex Plus to Centrex Plus		$222.3361	$0.0000	$3.8221	$0.2150	$0.9057	$4.7278	$0.2135	$4.9413
Centrex Plus to IC Carrier		$222.3361	$0.0000	$3.8221	$0.2150	$0.9057	$4.7278	$0.2135	$4.9413
Centrex Plus to PBX/Key Blocked		$222.3361	$0.0000	$3.8221	$0.2150	$0.9057	$4.7278	$0.2135	$4.9413
Centrex Plus to PBX/Key Non-Blocked		$222.3361	$0.0000	$3.8221	$0.2150	$0.9057	$4.7278	$0.2135	$4.9413
CFBL - All Calls		$0.7821	$0.0000	$0.0134	$0.0008	$0.0032	$0.0166	$0.0008	$0.0174
CFBL - Incoming Only		$0.7821	$0.0000	$0.0134	$0.0008	$0.0032	$0.0166	$0.0008	$0.0174

State: South Dakota

Description	USOC	Loaded Investment	Direct Expense	Total Direct	Network Support	Directly Attributed	TELRIC	Common	TELRIC + Common
CFDA Incoming Only		$0.3536	$0.0000	$0.0061	$0.0003	$0.0014	$0.0075	$0.0003	$0.0079
CLASS - Anonymous Call Rejection		$10.7787	$0.0000	$0.1853	$0.0104	$0.0439	$0.2292	$0.0104	$0.2396
CLASS - Call Waiting ID		$1.2528	$0.0000	$0.0215	$0.0012	$0.0051	$0.0266	$0.0012	$0.0278
CLASS - Calling Name & Number		$14.4073	$0.0000	$0.2477	$0.0139	$0.0587	$0.3064	$0.0138	$0.3202
CLASS - Calling Number Delivery		$1.2112	$0.0000	$0.0208	$0.0012	$0.0049	$0.0258	$0.0012	$0.0269
CLASS - Calling Number Delivery - Blocking		$11.3122	$0.0000	$0.1945	$0.0109	$0.0461	$0.2405	$0.0109	$0.2514
CLASS - Continuous Redial		$8.6514	$0.0000	$0.1487	$0.0084	$0.0352	$0.1840	$0.0083	$0.1923
CLASS - Last Call Return		$2.4277	$0.0000	$0.0417	$0.0023	$0.0099	$0.0516	$0.0023	$0.0540
CLASS - Priority Calling		$4.9172	$0.0000	$0.0845	$0.0048	$0.0200	$0.1046	$0.0047	$0.1093
CLASS - Selective Call Forwarding		$4.3983	$0.0000	$0.0756	$0.0043	$0.0179	$0.0935	$0.0042	$0.0978
CLASS - Selective Call Rejection		$10.0759	$0.0000	$0.1732	$0.0097	$0.0410	$0.2143	$0.0097	$0.2239
Conference Calling - Meet Me		$596.1532	$0.0000	$10.2483	$0.5764	$2.4284	$12.6767	$0.5726	$13.2493
Conference Calling - Preset		$435.4496	$0.0000	$7.4857	$0.4210	$1.7737	$9.2595	$0.4182	$9.6777
Custom Ringing First Line (Short/Long/Short)		$0.5446	$0.0000	$0.0094	$0.0005	$0.0022	$0.0116	$0.0005	$0.0121
Custom Ringing First Line (Short/Short)		$0.5446	$0.0000	$0.0094	$0.0005	$0.0022	$0.0116	$0.0005	$0.0121
Custom Ringing First Line (Short/Short/Long)		$0.5446	$0.0000	$0.0094	$0.0005	$0.0022	$0.0116	$0.0005	$0.0121
Custom Ringing Second Line (Short/Long/Short)		$0.5108	$0.0000	$0.0088	$0.0005	$0.0021	$0.0109	$0.0005	$0.0114
Custom Ringing Second Line (Short/Short)		$0.5108	$0.0000	$0.0088	$0.0005	$0.0021	$0.0109	$0.0005	$0.0114
Custom Ringing Second Line (Short/Short/Long)		$0.5108	$0.0000	$0.0088	$0.0005	$0.0021	$0.0109	$0.0005	$0.0114
Custom Ringing Third Line (Short/Long/Short)		$0.4084	$0.0000	$0.0070	$0.0004	$0.0017	$0.0087	$0.0004	$0.0091
Custom Ringing Third Line (Short/Short)		$0.4084	$0.0000	$0.0070	$0.0004	$0.0017	$0.0087	$0.0004	$0.0091
Custom Ringing Third Line (Short/Short/Long)		$0.4084	$0.0000	$0.0070	$0.0004	$0.0017	$0.0087	$0.0004	$0.0091
Data Call Protection (DMS 100)		$0.0000	$0.0000	$0.0000	$0.0000	$0.0000	$0.0000	$0.0000	$0.0000
Dir Sta Sel/Busy Lamp Fld per arrangement		$72.1810	$0.0000	$1.2408	$0.0698	$0.2940	$1.5349	$0.0693	$1.6042
Directed Call Pickup with Barge-in		$4.4321	$0.0000	$0.0762	$0.0043	$0.0181	$0.0942	$0.0043	$0.0985
Directed Call Pickup without Barge-in		$1.1377	$0.0000	$0.0196	$0.0011	$0.0046	$0.0242	$0.0011	$0.0253
Distinctive Ring/Distinctive Call Waiting		$0.5559	$0.0000	$0.0096	$0.0005	$0.0023	$0.0118	$0.0005	$0.0124
Distinctive Ringing		$0.5446	$0.0000	$0.0094	$0.0005	$0.0022	$0.0116	$0.0005	$0.0121
EBS - Set Interface - per station line		$56.1239	$0.0000	$0.9648	$0.0543	$0.2286	$1.1934	$0.0539	$1.2473
Executive Busy Overide		$0.0590	$0.0000	$0.0010	$0.0001	$0.0002	$0.0013	$0.0001	$0.0013
Expensive Route Warning Tone- per system		$0.0000	$0.0000	$0.0000	$0.0000	$0.0000	$0.0000	$0.0000	$0.0000

State: South Dakota

Description	USOC	Loaded Investment	Direct Expense	Total Direct	Network Support	Directly Attributed	TELRIC	Common	TELRIC + Common
Facility Restriction Level - per system		$0.0000	$0.0000	$0.0000	$0.0000	$0.0000	$0.0000	$0.0000	$0.0000
Feature Display		$0.0087	$0.0000	$0.0001	$0.0000	$0.0000	$0.0002	$0.0000	$0.0002
Group Intercom		$3.3718	$0.0000	$0.0580	$0.0033	$0.0137	$0.0717	$0.0032	$0.0749
Hot Line - per line		$2.3156	$0.0000	$0.0398	$0.0022	$0.0094	$0.0492	$0.0022	$0.0515
Hunting: Multiposition Circular Hunting		$8.1161	$0.0000	$0.1395	$0.0078	$0.0331	$0.1726	$0.0078	$0.1804
Hunting: Multiposition Hunt Queuing		$6.3387	$0.0000	$0.1090	$0.0061	$0.0258	$0.1348	$0.0061	$0.1409
Hunting: Multiposition Series Hunting		$8.1161	$0.0000	$0.1395	$0.0078	$0.0331	$0.1726	$0.0078	$0.1804
Hunting: Multiposition with Announcement in Queue		$128.4308	$0.0000	$2.2078	$0.1242	$0.5231	$2.7310	$0.1234	$2.8543
Hunting: Multiposition with Music in Queue		$43.7204	$0.0000	$0.7516	$0.0423	$0.1781	$0.9297	$0.0420	$0.9717
Incoming Calls Barred		$0.2927	$0.0000	$0.0050	$0.0003	$0.0012	$0.0062	$0.0003	$0.0065
International Direct Dial Blocking		$0.4313	$0.0000	$0.0074	$0.0004	$0.0018	$0.0092	$0.0004	$0.0096
ISDN Short Hunt		$20.6132	$0.0000	$0.3544	$0.0199	$0.0840	$0.4383	$0.0198	$0.4581
Line Side Answer Supervision		$0.8280	$0.0000	$0.0142	$0.0008	$0.0034	$0.0176	$0.0008	$0.0184
Loudspeaker Paging - per trunk group		$898.8292	$0.0000	$15.4516	$0.8691	$3.6613	$19.1128	$0.8633	$19.9761
Make Busy Arrangements - per group		$11.7954	$0.0000	$0.2028	$0.0114	$0.0480	$0.2508	$0.0113	$0.2621
Make Busy Arrangements - per line		$2.9488	$0.0000	$0.0507	$0.0029	$0.0120	$0.0627	$0.0028	$0.0655
Message Center - per main station line		$0.0000	$0.0000	$0.0000	$0.0000	$0.0000	$0.0000	$0.0000	$0.0000
Message Waiting Indication Audible/Visual		$2.2079	$0.0000	$0.0380	$0.0021	$0.0090	$0.0470	$0.0021	$0.0491
Message Waiting Visual		$2.2079	$0.0000	$0.0380	$0.0021	$0.0090	$0.0470	$0.0021	$0.0491
Music On Hold - per system		$936.4626	$0.0000	$16.0985	$0.9054	$3.8146	$19.9131	$0.8995	$20.8125
Network Speed Call		$0.0126	$0.0000	$0.0002	$0.0000	$0.0001	$0.0003	$0.0000	$0.0003
Night Service Arrangement		$0.0649	$0.0000	$0.0011	$0.0001	$0.0003	$0.0014	$0.0001	$0.0014
Outgoing Calls Barred		$0.0220	$0.0000	$0.0004	$0.0000	$0.0001	$0.0005	$0.0000	$0.0005
Outgoing Trunk Queuing		$2.2812	$0.0000	$0.0392	$0.0022	$0.0093	$0.0485	$0.0022	$0.0507
Privacy Release		$0.1295	$0.0000	$0.0022	$0.0001	$0.0005	$0.0028	$0.0001	$0.0029
Query Time		$7.1043	$0.0000	$0.1221	$0.0069	$0.0289	$0.1511	$0.0068	$0.1579
Speed Calling 1 Digit Controller		$0.3720	$0.0000	$0.0064	$0.0004	$0.0015	$0.0079	$0.0004	$0.0083
Speed Calling 1 Digit User		$0.3720	$0.0000	$0.0064	$0.0004	$0.0015	$0.0079	$0.0004	$0.0083
Speed Calling 1# List Individual		$0.3720	$0.0000	$0.0064	$0.0004	$0.0015	$0.0079	$0.0004	$0.0083
Speed Calling 2 Digit Controller		$0.3720	$0.0000	$0.0064	$0.0004	$0.0015	$0.0079	$0.0004	$0.0083
Speed Calling 2 Digit User		$0.3720	$0.0000	$0.0064	$0.0004	$0.0015	$0.0079	$0.0004	$0.0083

State: South Dakota

Description	USOC	Loaded Investment	Direct Expense	Total Direct	Network Support	Directly Attributed	TELRIC	Common	TELRIC + Common
Speed Calling 2# List Individual		$0.3720	$0.0000	$0.0064	$0.0004	$0.0015	$0.0079	$0.0004	$0.0083
Speed Calling 30 Number		$0.3720	$0.0000	$0.0064	$0.0004	$0.0015	$0.0079	$0.0004	$0.0083
Speed Calling 8 Number		$0.3720	$0.0000	$0.0064	$0.0004	$0.0015	$0.0079	$0.0004	$0.0083
Station Camp-On Service - per main station		$346.3396	$0.0000	$5.9538	$0.3349	$1.4108	$7.3646	$0.3327	$7.6973
Station Dial Conferencing (6 Way)		$67.0389	$0.0000	$1.1525	$0.0648	$0.2731	$1.4255	$0.0644	$1.4899
Station Message Detail Recording (SMDR)		$1.4371	$0.0524	$0.0804	$0.0045	$0.0190	$0.0994	$0.0045	$0.1039
Three Way Calling		$10.5492	$0.0000	$0.1813	$0.0102	$0.0430	$0.2243	$0.0101	$0.2345
Time and Date Display		$4.3995	$0.0000	$0.0756	$0.0043	$0.0179	$0.0936	$0.0042	$0.0978
Time of Day Control for ARS - per system		$0.0000	$0.0000	$0.0000	$0.0000	$0.0000	$0.0000	$0.0000	$0.0000
Time of Day NCOS Update		$0.2302	$0.0000	$0.0040	$0.0002	$0.0009	$0.0049	$0.0002	$0.0051
Time of Day Routing - per line		$2.4541	$0.0000	$0.0422	$0.0024	$0.0100	$0.0522	$0.0024	$0.0545
Toll Restriction Service		$0.2093	$0.0000	$0.0036	$0.0002	$0.0009	$0.0045	$0.0002	$0.0047
Trunk Answer Any Station		$0.0649	$0.0000	$0.0011	$0.0001	$0.0003	$0.0014	$0.0001	$0.0014
Trunk Verification from Designated Station		$0.0000	$0.0000	$0.0000	$0.0000	$0.0000	$0.0000	$0.0000	$0.0000
UCD in hunt group - per line		$334.9949	$0.0000	$5.7588	$0.3239	$1.3646	$7.1234	$0.3218	$7.4451
UCD with Music After Delay		$220.7583	$0.0000	$3.7950	$0.2134	$0.8992	$4.6942	$0.2120	$4.9063

Row	7/12/01 11:14 AM South Dakota	Source or Calculation	Factor Value	10XXX Direct Dialed Blocking	Account Codes - per system	Attendant Access Line - per station line	Audible Message Waiting	Authorization Codes - per system	Auto Callback
			A	B	C	D	E	F	G
1	**Investment**	sl r"Total" cD		0.0296	307.5790	0.2415	2.2079	130.3588	0.2903
2									
3	***Investment Based Costs***	***sl r"Total" cK***		0.0005	5.0994	0.0040	0.0366	2.1612	0.0048
4									
5	Direct Expenses			0.0000	0.0000	0.0000	0.0000	0.0000	0.0000
6	Miscellaneous Expenses			0.0000	0.0000	0.0000	0.0000	0.0000	0.0000
7	Billing & Collection - PL			0.0000	0.0000	0.0000	0.0000	0.0000	0.0000
8	***Investment Based + Direct Costs***			0.0005	5.0994	0.0040	0.0366	2.1612	0.0048
9									
10	***Directly Assigned***								
11	Product Management Expense	cA*(r8-r6)	0.025565	0.0000	0.1304	0.0001	0.0009	0.0553	0.0001
12	Sales Expense	cA*(r8-r6)	0.009225	0.0000	0.0470	0.0000	0.0003	0.0199	0.0000
13	Product Advertising Expense	cA*(r8-r6)	0.000000	0.0000	0.0000	0.0000	0.0000	0.0000	0.0000
14	Business Fees (Other Operating Taxes)	cA*(Sum(r8:r13)-r6)	0.002025	0.0000	0.0107	0.0000	0.0001	0.0045	0.0000
15	***Directly Assigned Costs***	***Sum r11:r14***		0.0000	0.1881	0.0001	0.0014	0.0797	0.0002
16									
17	***Total Direct Costs***	***r8 + r15***		0.0005	5.2875	0.0042	0.0380	2.2410	0.0050
18									
19	***Directly Attributed***								
20	Network Operations	cA*(r17-r6)	0.040880	0.0000	0.2162	0.0002	0.0016	0.0916	0.0002
21	Network Support Assets	cA*(r17-r6)	0.015364	0.0000	0.0812	0.0001	0.0006	0.0344	0.0001
22	General Support Assets	cA*(r17-r6)	0.069508	0.0000	0.3675	0.0003	0.0026	0.1558	0.0003
23	General Purpose Computers	cA*(r17-r6)	0.034714	0.0000	0.1836	0.0001	0.0013	0.0778	0.0002
24	Uncollectible	cA*(r17-r6)	0.000401	0.0000	0.0021	0.0000	0.0000	0.0009	0.0000
25	Accounting & Finance Expense	cA*(r17-r6)	0.008839	0.0000	0.0467	0.0000	0.0003	0.0198	0.0000
26	Human Resources Expense	cA*(r17-r6)	0.008145	0.0000	0.0431	0.0000	0.0003	0.0183	0.0000
27	Information Management Expense	cA*(r17-r6)	0.057009	0.0000	0.3014	0.0002	0.0022	0.1278	0.0003
28	Intangibles	cA*(r17-r6)	0.002091	0.0000	0.0111	0.0000	0.0001	0.0047	0.0000
29	***Directly Attributed Costs***	***Sum r20:r28***		0.0001	1.2529	0.0010	0.0090	0.5310	0.0012
30									
31	***TELRIC***	***r17 + r29***		0.0006	6.5404	0.0051	0.0470	2.7720	0.0062
32									
33	***Common***								
34	Executive Expense	cA*(r31-r6)	0.007805	0.0000	0.0510	0.0000	0.0004	0.0216	0.0000
35	Planning Expense	cA*(r31-r6)	0.000580	0.0000	0.0038	0.0000	0.0000	0.0016	0.0000
36	External Relations Expense	cA*(r31-r6)	0.013029	0.0000	0.0852	0.0001	0.0006	0.0361	0.0001
37	Legal Expense	cA*(r31-r6)	0.006148	0.0000	0.0402	0.0000	0.0003	0.0170	0.0000
38	Other Procurement Expense	cA*(r31-r6)	0.002359	0.0000	0.0154	0.0000	0.0001	0.0065	0.0000
39	Research & Development Expense	cA*(r31-r6)	0.000036	0.0000	0.0002	0.0000	0.0000	0.0001	0.0000
40	Other General and Admin Expense	cA*(r31-r6)	0.015212	0.0000	0.0995	0.0001	0.0007	0.0422	0.0001
41	***Common Costs***	***Sum r34:r40***		0.0000	0.2954	0.0002	0.0021	0.1252	0.0003
42									
43	***TELRIC + Common Costs***	***r31 + r41***		0.0007	6.8358	0.0054	0.0491	2.8972	0.0065

Row	7/12/01 11:14 AM South Dakota	Source or Calculation	Factor Value	Automatic Line	Automatic Route Selection - Common Equip. per system	Blocking of pay per call services	Bridging	Call Drop	Call Exclusion - Automatic
			A	H	I	J	K	L	M
1	**Investment**	sl r"Total" cD		0.0000	87.2269	1.1789	0.0166	0.0036	0.0001
2									
3	***Investment Based Costs***	***sl r"Total" cK***		0.0000	1.4462	0.0195	0.0003	0.0001	0.0000
4									
5	Direct Expenses			0.0000	0.0000	0.0000	0.0000	0.0000	0.0000
6	Miscellaneous Expenses			0.0000	0.0000	0.0000	0.0000	0.0000	0.0000
7	Billing & Collection - PL			0.0000	0.0000	0.0000	0.0000	0.0000	0.0000
8	***Investment Based + Direct Costs***			0.0000	1.4462	0.0195	0.0003	0.0001	0.0000
9									
10	***Directly Assigned***								
11	Product Management Expense	cA*(r8-r6)	0.025565	0.0000	0.0370	0.0005	0.0000	0.0000	0.0000
12	Sales Expense	cA*(r8-r6)	0.009225	0.0000	0.0133	0.0002	0.0000	0.0000	0.0000
13	Product Advertising Expense	cA*(r8-r6)	0.000000	0.0000	0.0000	0.0000	0.0000	0.0000	0.0000
14	Business Fees (Other Operating Taxes)	cA*(Sum(r8:r13)-r6)	0.002025	0.0000	0.0030	0.0000	0.0000	0.0000	0.0000
15	***Directly Assigned Costs***	***Sum r11:r14***		0.0000	0.0533	0.0007	0.0000	0.0000	0.0000
16									
17	***Total Direct Costs***	***r8 + r15***		0.0000	1.4995	0.0203	0.0003	0.0001	0.0000
18									
19	***Directly Attributed***								
20	Network Operations	cA*(r17-r6)	0.040880	0.0000	0.0613	0.0008	0.0000	0.0000	0.0000
21	Network Support Assets	cA*(r17-r6)	0.015364	0.0000	0.0230	0.0003	0.0000	0.0000	0.0000
22	General Support Assets	cA*(r17-r6)	0.069508	0.0000	0.1042	0.0014	0.0000	0.0000	0.0000
23	General Purpose Computers	cA*(r17-r6)	0.034714	0.0000	0.0521	0.0007	0.0000	0.0000	0.0000
24	Uncollectible	cA*(r17-r6)	0.000401	0.0000	0.0006	0.0000	0.0000	0.0000	0.0000
25	Accounting & Finance Expense	cA*(r17-r6)	0.008839	0.0000	0.0133	0.0002	0.0000	0.0000	0.0000
26	Human Resources Expense	cA*(r17-r6)	0.008145	0.0000	0.0122	0.0002	0.0000	0.0000	0.0000
27	Information Management Expense	cA*(r17-r6)	0.057009	0.0000	0.0855	0.0012	0.0000	0.0000	0.0000
28	Intangibles	cA*(r17-r6)	0.002091	0.0000	0.0031	0.0000	0.0000	0.0000	0.0000
29	***Directly Attributed Costs***	***Sum r20:r28***		0.0000	0.3553	0.0048	0.0001	0.0000	0.0000
30									
31	***TELRIC***	***r17 + r29***		0.0000	1.8548	0.0251	0.0004	0.0001	0.0000
32									
33	***Common***								
34	Executive Expense	cA*(r31-r6)	0.007805	0.0000	0.0145	0.0002	0.0000	0.0000	0.0000
35	Planning Expense	cA*(r31-r6)	0.000580	0.0000	0.0011	0.0000	0.0000	0.0000	0.0000
36	External Relations Expense	cA*(r31-r6)	0.013029	0.0000	0.0242	0.0003	0.0000	0.0000	0.0000
37	Legal Expense	cA*(r31-r6)	0.006148	0.0000	0.0114	0.0002	0.0000	0.0000	0.0000
38	Other Procurement Expense	cA*(r31-r6)	0.002359	0.0000	0.0044	0.0001	0.0000	0.0000	0.0000
39	Research & Development Expense	cA*(r31-r6)	0.000036	0.0000	0.0001	0.0000	0.0000	0.0000	0.0000
40	Other General and Admin Expense	cA*(r31-r6)	0.015212	0.0000	0.0282	0.0004	0.0000	0.0000	0.0000
41	***Common Costs***	***Sum r34:r40***		0.0000	0.0838	0.0011	0.0000	0.0000	0.0000
42									
43	***TELRIC + Common Costs***	***r31 + r41***		0.0000	1.9386	0.0262	0.0004	0.0001	0.0000

Row	7/12/01 11:14 AM South Dakota	Source or Calculation	Factor Value	Call Exclusion - Manual	Call Forward Don't Answer - All Calls	Call Forwarding Incoming Only	Call Forwarding Intra Group Only	Call Forwarding Variable Remote	Call Forwarding: Busy Line (Expanded)
			A	N	O	P	Q	R	S
1	**Investment**	sl r"Total" cD		0.0001	2.4021	0.2506	0.2123	1.5558	0.7821
2									
3	***Investment Based Costs***	***sl r"Total" cK***		0.0000	0.0398	0.0042	0.0035	0.0258	0.0130
4									
5	Direct Expenses			0.0000	0.0000	0.0000	0.0000	0.0000	0.0000
6	Miscellaneous Expenses			0.0000	0.0000	0.0000	0.0000	0.0000	0.0000
7	Billing & Collection - PL			0.0000	0.0000	0.0000	0.0000	0.0000	0.0000
8	***Investment Based + Direct Costs***			0.0000	0.0398	0.0042	0.0035	0.0258	0.0130
9									
10	***Directly Assigned***								
11	Product Management Expense	cA*(r8-r6)	0.025565	0.0000	0.0010	0.0001	0.0001	0.0007	0.0003
12	Sales Expense	cA*(r8-r6)	0.009225	0.0000	0.0004	0.0000	0.0000	0.0002	0.0001
13	Product Advertising Expense	cA*(r8-r6)	0.000000	0.0000	0.0000	0.0000	0.0000	0.0000	0.0000
14	Business Fees (Other Operating Taxes)	cA*(Sum(r8:r13)-r6)	0.002025	0.0000	0.0001	0.0000	0.0000	0.0001	0.0000
15	***Directly Assigned Costs***	***Sum r11:r14***		0.0000	0.0015	0.0002	0.0001	0.0010	0.0005
16									
17	***Total Direct Costs***	***r8 + r15***		0.0000	0.0413	0.0043	0.0036	0.0267	0.0134
18									
19	***Directly Attributed***								
20	Network Operations	cA*(r17-r6)	0.040880	0.0000	0.0017	0.0002	0.0001	0.0011	0.0005
21	Network Support Assets	cA*(r17-r6)	0.015364	0.0000	0.0006	0.0001	0.0001	0.0004	0.0002
22	General Support Assets	cA*(r17-r6)	0.069508	0.0000	0.0029	0.0003	0.0003	0.0019	0.0009
23	General Purpose Computers	cA*(r17-r6)	0.034714	0.0000	0.0014	0.0001	0.0001	0.0009	0.0005
24	Uncollectible	cA*(r17-r6)	0.000401	0.0000	0.0000	0.0000	0.0000	0.0000	0.0000
25	Accounting & Finance Expense	cA*(r17-r6)	0.008839	0.0000	0.0004	0.0000	0.0000	0.0002	0.0001
26	Human Resources Expense	cA*(r17-r6)	0.008145	0.0000	0.0003	0.0000	0.0000	0.0002	0.0001
27	Information Management Expense	cA*(r17-r6)	0.057009	0.0000	0.0024	0.0002	0.0002	0.0015	0.0008
28	Intangibles	cA*(r17-r6)	0.002091	0.0000	0.0001	0.0000	0.0000	0.0001	0.0000
29	***Directly Attributed Costs***	***Sum r20:r28***		0.0000	0.0098	0.0010	0.0009	0.0063	0.0032
30									
31	***TELRIC***	***r17 + r29***		0.0000	0.0511	0.0053	0.0045	0.0331	0.0166
32									
33	***Common***								
34	Executive Expense	cA*(r31-r6)	0.007805	0.0000	0.0004	0.0000	0.0000	0.0003	0.0001
35	Planning Expense	cA*(r31-r6)	0.000580	0.0000	0.0000	0.0000	0.0000	0.0000	0.0000
36	External Relations Expense	cA*(r31-r6)	0.013029	0.0000	0.0007	0.0001	0.0001	0.0004	0.0002
37	Legal Expense	cA*(r31-r6)	0.006148	0.0000	0.0003	0.0000	0.0000	0.0002	0.0001
38	Other Procurement Expense	cA*(r31-r6)	0.002359	0.0000	0.0001	0.0000	0.0000	0.0001	0.0000
39	Research & Development Expense	cA*(r31-r6)	0.000036	0.0000	0.0000	0.0000	0.0000	0.0000	0.0000
40	Other General and Admin Expense	cA*(r31-r6)	0.015212	0.0000	0.0008	0.0001	0.0001	0.0005	0.0003
41	***Common Costs***	***Sum r34:r40***		0.0000	0.0023	0.0002	0.0002	0.0015	0.0008
42									
43	***TELRIC + Common Costs***	***r31 + r41***		0.0000	0.0534	0.0056	0.0047	0.0346	0.0174

Row	7/12/01 11:14 AM South Dakota	Source or Calculation	Factor Value	Call Forwarding: Busy Line (External)	Call Forwarding: Busy Line (External) Don't Answer	Call Forwarding: Busy Line (Overflow)	Call Forwarding: Busy Line (Overflow) Don't Answer	Call Forwarding: Busy Line (Programmable)	Call Forwarding: Busy Line/Don't Answer (Expanded)
			A	T	U	V	W	X	Y
1	Investment	sl r"Total" cD		0.7821	3.1842	0.7821	3.1842	1.0237	3.1842
2									
3	***Investment Based Costs***	***sl r"Total" cK***		0.0130	0.0528	0.0130	0.0528	0.0170	0.0528
4									
5	Direct Expenses			0.0000	0.0000	0.0000	0.0000	0.0000	0.0000
6	Miscellaneous Expenses			0.0000	0.0000	0.0000	0.0000	0.0000	0.0000
7	Billing & Collection - PL			0.0000	0.0000	0.0000	0.0000	0.0000	0.0000
8	***Investment Based + Direct Costs***			0.0130	0.0528	0.0130	0.0528	0.0170	0.0528
9									
10	***Directly Assigned***								
11	Product Management Expense	cA*(r8-r6)	0.025565	0.0003	0.0013	0.0003	0.0013	0.0004	0.0013
12	Sales Expense	cA*(r8-r6)	0.009225	0.0001	0.0005	0.0001	0.0005	0.0002	0.0005
13	Product Advertising Expense	cA*(r8-r6)	0.000000	0.0000	0.0000	0.0000	0.0000	0.0000	0.0000
14	Business Fees (Other Operating Taxes)	cA*(Sum(r8:r13)-r6)	0.002025	0.0000	0.0001	0.0000	0.0001	0.0000	0.0001
15	***Directly Assigned Costs***	***Sum r11:r14***		0.0005	0.0019	0.0005	0.0019	0.0006	0.0019
16									
17	***Total Direct Costs***	***r8 + r15***		0.0134	0.0547	0.0134	0.0547	0.0176	0.0547
18									
19	***Directly Attributed***								
20	Network Operations	cA*(r17-r6)	0.040880	0.0005	0.0022	0.0005	0.0022	0.0007	0.0022
21	Network Support Assets	cA*(r17-r6)	0.015364	0.0002	0.0008	0.0002	0.0008	0.0003	0.0008
22	General Support Assets	cA*(r17-r6)	0.069508	0.0009	0.0038	0.0009	0.0038	0.0012	0.0038
23	General Purpose Computers	cA*(r17-r6)	0.034714	0.0005	0.0019	0.0005	0.0019	0.0006	0.0019
24	Uncollectible	cA*(r17-r6)	0.000401	0.0000	0.0000	0.0000	0.0000	0.0000	0.0000
25	Accounting & Finance Expense	cA*(r17-r6)	0.008839	0.0001	0.0005	0.0001	0.0005	0.0002	0.0005
26	Human Resources Expense	cA*(r17-r6)	0.008145	0.0001	0.0004	0.0001	0.0004	0.0001	0.0004
27	Information Management Expense	cA*(r17-r6)	0.057009	0.0008	0.0031	0.0008	0.0031	0.0010	0.0031
28	Intangibles	cA*(r17-r6)	0.002091	0.0000	0.0001	0.0000	0.0001	0.0000	0.0001
29	***Directly Attributed Costs***	***Sum r20:r28***		0.0032	0.0130	0.0032	0.0130	0.0042	0.0130
30									
31	***TELRIC***	***r17 + r29***		0.0166	0.0677	0.0166	0.0677	0.0218	0.0677
32									
33	***Common***								
34	Executive Expense	cA*(r31-r6)	0.007805	0.0001	0.0005	0.0001	0.0005	0.0002	0.0005
35	Planning Expense	cA*(r31-r6)	0.000580	0.0000	0.0000	0.0000	0.0000	0.0000	0.0000
36	External Relations Expense	cA*(r31-r6)	0.013029	0.0002	0.0009	0.0002	0.0009	0.0003	0.0009
37	Legal Expense	cA*(r31-r6)	0.006148	0.0001	0.0004	0.0001	0.0004	0.0001	0.0004
38	Other Procurement Expense	cA*(r31-r6)	0.002359	0.0000	0.0002	0.0000	0.0002	0.0001	0.0002
39	Research & Development Expense	cA*(r31-r6)	0.000036	0.0000	0.0000	0.0000	0.0000	0.0000	0.0000
40	Other General and Admin Expense	cA*(r31-r6)	0.015212	0.0003	0.0010	0.0003	0.0010	0.0003	0.0010
41	***Common Costs***	***Sum r34:r40***		0.0008	0.0031	0.0008	0.0031	0.0010	0.0031
42									
43	***TELRIC + Common Costs***	***r31 + r41***		0.0174	0.0708	0.0174	0.0708	0.0228	0.0708

Row	7/12/01 11:14 AM South Dakota	Source or Calculation	Factor Value	Call Forwarding: Don't Answer	Call Forwarding: Don't Answer (Expanded)	Call Forwarding: Don't Answer (Programmable)	Call Forwarding: Variable	Call Forwarding: Variable - no call complete option	Call Hold
			A	Z	AA	AB	AC	AD	AE
1	**Investment**	sl r"Total" cD		2.4021	2.4021	2.1647	1.1669	1.1669	0.3177
2									
3	***Investment Based Costs***	***sl r"Total" cK***		0.0398	0.0398	0.0359	0.0193	0.0193	0.0053
4									
5	Direct Expenses			0.0000	0.0000	0.0000	0.0000	0.0000	0.0000
6	Miscellaneous Expenses			0.0000	0.0000	0.0000	0.0000	0.0000	0.0000
7	Billing & Collection - PL			0.0000	0.0000	0.0000	0.0000	0.0000	0.0000
8	***Investment Based + Direct Costs***			0.0398	0.0398	0.0359	0.0193	0.0193	0.0053
9									
10	***Directly Assigned***								
11	Product Management Expense	cA*(r8-r6)	0.025565	0.0010	0.0010	0.0009	0.0005	0.0005	0.0001
12	Sales Expense	cA*(r8-r6)	0.009225	0.0004	0.0004	0.0003	0.0002	0.0002	0.0000
13	Product Advertising Expense	cA*(r8-r6)	0.000000	0.0000	0.0000	0.0000	0.0000	0.0000	0.0000
14	Business Fees (Other Operating Taxes)	cA*(Sum(r8:r13)-r6)	0.002025	0.0001	0.0001	0.0001	0.0000	0.0000	0.0000
15	***Directly Assigned Costs***	***Sum r11:r14***		0.0015	0.0015	0.0013	0.0007	0.0007	0.0002
16									
17	***Total Direct Costs***	***r8 + r15***		0.0413	0.0413	0.0372	0.0201	0.0201	0.0055
18									
19	***Directly Attributed***								
20	Network Operations	cA*(r17-r6)	0.040880	0.0017	0.0017	0.0015	0.0008	0.0008	0.0002
21	Network Support Assets	cA*(r17-r6)	0.015364	0.0006	0.0006	0.0006	0.0003	0.0003	0.0001
22	General Support Assets	cA*(r17-r6)	0.069508	0.0029	0.0029	0.0026	0.0014	0.0014	0.0004
23	General Purpose Computers	cA*(r17-r6)	0.034714	0.0014	0.0014	0.0013	0.0007	0.0007	0.0002
24	Uncollectible	cA*(r17-r6)	0.000401	0.0000	0.0000	0.0000	0.0000	0.0000	0.0000
25	Accounting & Finance Expense	cA*(r17-r6)	0.008839	0.0004	0.0004	0.0003	0.0002	0.0002	0.0000
26	Human Resources Expense	cA*(r17-r6)	0.008145	0.0003	0.0003	0.0003	0.0002	0.0002	0.0000
27	Information Management Expense	cA*(r17-r6)	0.057009	0.0024	0.0024	0.0021	0.0011	0.0011	0.0003
28	Intangibles	cA*(r17-r6)	0.002091	0.0001	0.0001	0.0001	0.0000	0.0000	0.0000
29	***Directly Attributed Costs***	***Sum r20:r28***		0.0098	0.0098	0.0088	0.0048	0.0048	0.0013
30									
31	***TELRIC***	***r17 + r29***		0.0511	0.0511	0.0460	0.0248	0.0248	0.0068
32									
33	***Common***								
34	Executive Expense	cA*(r31-r6)	0.007805	0.0004	0.0004	0.0004	0.0002	0.0002	0.0001
35	Planning Expense	cA*(r31-r6)	0.000580	0.0000	0.0000	0.0000	0.0000	0.0000	0.0000
36	External Relations Expense	cA*(r31-r6)	0.013029	0.0007	0.0007	0.0006	0.0003	0.0003	0.0001
37	Legal Expense	cA*(r31-r6)	0.006148	0.0003	0.0003	0.0003	0.0002	0.0002	0.0000
38	Other Procurement Expense	cA*(r31-r6)	0.002359	0.0001	0.0001	0.0001	0.0001	0.0001	0.0000
39	Research & Development Expense	cA*(r31-r6)	0.000036	0.0000	0.0000	0.0000	0.0000	0.0000	0.0000
40	Other General and Admin Expense	cA*(r31-r6)	0.015212	0.0008	0.0008	0.0007	0.0004	0.0004	0.0001
41	***Common Costs***	***Sum r34:r40***		0.0023	0.0023	0.0021	0.0011	0.0011	0.0003
42									
43	***TELRIC + Common Costs***	***r31 + r41***		0.0534	0.0534	0.0481	0.0259	0.0259	0.0071

Total Product Costs

Row	7/12/01 11:14 AM South Dakota	Source or Calculation	Factor Value	Call Hold/3-Way/Call Transfer	Call Park (Basic - Store & Retrieve)	Call Pickup	Call Transfer	Call Waiting Dial Originating	Call Waiting Indication - per timing state
			A	AF	AG	AH	AI	AJ	AK
1	**Investment**	sl r"Total" cD		10.5492	0.6943	0.2879	10.5492	0.4041	16.3899
2									
3	***Investment Based Costs***	***sl r"Total" cK***		0.1749	0.0115	0.0048	0.1749	0.0067	0.2717
4									
5	Direct Expenses			0.0000	0.0000	0.0000	0.0000	0.0000	0.0000
6	Miscellaneous Expenses			0.0000	0.0000	0.0000	0.0000	0.0000	0.0000
7	Billing & Collection - PL			0.0000	0.0000	0.0000	0.0000	0.0000	0.0000
8	***Investment Based + Direct Costs***			0.1749	0.0115	0.0048	0.1749	0.0067	0.2717
9									
10	***Directly Assigned***								
11	Product Management Expense	cA*(r8-r6)	0.025565	0.0045	0.0003	0.0001	0.0045	0.0002	0.0069
12	Sales Expense	cA*(r8-r6)	0.009225	0.0016	0.0001	0.0000	0.0016	0.0001	0.0025
13	Product Advertising Expense	cA*(r8-r6)	0.000000	0.0000	0.0000	0.0000	0.0000	0.0000	0.0000
14	Business Fees (Other Operating Taxes)	cA*(Sum(r8:r13)-r6)	0.002025	0.0004	0.0000	0.0000	0.0004	0.0000	0.0006
15	***Directly Assigned Costs***	***Sum r11:r14***		0.0065	0.0004	0.0002	0.0065	0.0002	0.0100
16									
17	***Total Direct Costs***	***r8 + r15***		0.1813	0.0119	0.0049	0.1813	0.0069	0.2818
18									
19	***Directly Attributed***								
20	Network Operations	cA*(r17-r6)	0.040880	0.0074	0.0005	0.0002	0.0074	0.0003	0.0115
21	Network Support Assets	cA*(r17-r6)	0.015364	0.0028	0.0002	0.0001	0.0028	0.0001	0.0043
22	General Support Assets	cA*(r17-r6)	0.069508	0.0126	0.0008	0.0003	0.0126	0.0005	0.0196
23	General Purpose Computers	cA*(r17-r6)	0.034714	0.0063	0.0004	0.0002	0.0063	0.0002	0.0098
24	Uncollectible	cA*(r17-r6)	0.000401	0.0001	0.0000	0.0000	0.0001	0.0000	0.0001
25	Accounting & Finance Expense	cA*(r17-r6)	0.008839	0.0016	0.0001	0.0000	0.0016	0.0001	0.0025
26	Human Resources Expense	cA*(r17-r6)	0.008145	0.0015	0.0001	0.0000	0.0015	0.0001	0.0023
27	Information Management Expense	cA*(r17-r6)	0.057009	0.0103	0.0007	0.0003	0.0103	0.0004	0.0161
28	Intangibles	cA*(r17-r6)	0.002091	0.0004	0.0000	0.0000	0.0004	0.0000	0.0006
29	***Directly Attributed Costs***	***Sum r20:r28***		0.0430	0.0028	0.0012	0.0430	0.0016	0.0668
30									
31	***TELRIC***	***r17 + r29***		0.2243	0.0148	0.0061	0.2243	0.0086	0.3485
32									
33	***Common***								
34	Executive Expense	cA*(r31-r6)	0.007805	0.0018	0.0001	0.0000	0.0018	0.0001	0.0027
35	Planning Expense	cA*(r31-r6)	0.000580	0.0001	0.0000	0.0000	0.0001	0.0000	0.0002
36	External Relations Expense	cA*(r31-r6)	0.013029	0.0029	0.0002	0.0001	0.0029	0.0001	0.0045
37	Legal Expense	cA*(r31-r6)	0.006148	0.0014	0.0001	0.0000	0.0014	0.0001	0.0021
38	Other Procurement Expense	cA*(r31-r6)	0.002359	0.0005	0.0000	0.0000	0.0005	0.0000	0.0008
39	Research & Development Expense	cA*(r31-r6)	0.000036	0.0000	0.0000	0.0000	0.0000	0.0000	0.0000
40	Other General and Admin Expense	cA*(r31-r6)	0.015212	0.0034	0.0002	0.0001	0.0034	0.0001	0.0053
41	***Common Costs***	***Sum r34:r40***		0.0101	0.0007	0.0003	0.0101	0.0004	0.0157
42									
43	***TELRIC + Common Costs***	***r31 + r41***		0.2345	0.0154	0.0064	0.2345	0.0090	0.3643

Total Product Costs

Row	7/12/01 11:14 AM South Dakota	Source or Calculation	Factor Value	Call Waiting Originating	Call Waiting Terminating - All Calls	Call Waiting Terminating - Incoming Only	Call Waiting/ Cancel Call Waiting	Centrex Management System (CMS)	Centrex Plus DID numbers per number
			A	AL	AM	AN	AO	AP	AQ
1	Investment	sl r"Total" cD		0.8381	1.6806	1.6806	2.6912	1.1349	1.6778
2									
3	***Investment Based Costs***	***sl r"Total" cK***		0.0139	0.0279	0.0279	0.0446	0.0225	0.0278
4									
5	Direct Expenses			0.0000	0.0000	0.0000	0.0000	0.3524	0.0000
6	Miscellaneous Expenses			0.0000	0.0000	0.0000	0.0000	0.0000	0.0000
7	Billing & Collection - PL			0.0000	0.0000	0.0000	0.0000	0.0000	0.0000
8	***Investment Based + Direct Costs***			0.0139	0.0279	0.0279	0.0446	0.3749	0.0278
9									
10	***Directly Assigned***								
11	Product Management Expense	cA*(r8-r6)	0.025565	0.0004	0.0007	0.0007	0.0011	0.0096	0.0007
12	Sales Expense	cA*(r8-r6)	0.009225	0.0001	0.0003	0.0003	0.0004	0.0035	0.0003
13	Product Advertising Expense	cA*(r8-r6)	0.000000	0.0000	0.0000	0.0000	0.0000	0.0000	0.0000
14	Business Fees (Other Operating Taxes)	cA*(Sum(r8:r13)-r6)	0.002025	0.0000	0.0001	0.0001	0.0001	0.0008	0.0001
15	***Directly Assigned Costs***	***Sum r11:r14***		0.0005	0.0010	0.0010	0.0016	0.0138	0.0010
16									
17	***Total Direct Costs***	***r8 + r15***		0.0144	0.0289	0.0289	0.0463	0.3887	0.0288
18									
19	***Directly Attributed***								
20	Network Operations	cA*(r17-r6)	0.040880	0.0006	0.0012	0.0012	0.0019	0.0159	0.0012
21	Network Support Assets	cA*(r17-r6)	0.015364	0.0002	0.0004	0.0004	0.0007	0.0060	0.0004
22	General Support Assets	cA*(r17-r6)	0.069508	0.0010	0.0020	0.0020	0.0032	0.0270	0.0020
23	General Purpose Computers	cA*(r17-r6)	0.034714	0.0005	0.0010	0.0010	0.0016	0.0135	0.0010
24	Uncollectible	cA*(r17-r6)	0.000401	0.0000	0.0000	0.0000	0.0000	0.0002	0.0000
25	Accounting & Finance Expense	cA*(r17-r6)	0.008839	0.0001	0.0003	0.0003	0.0004	0.0034	0.0003
26	Human Resources Expense	cA*(r17-r6)	0.008145	0.0001	0.0002	0.0002	0.0004	0.0032	0.0002
27	Information Management Expense	cA*(r17-r6)	0.057009	0.0008	0.0016	0.0016	0.0026	0.0222	0.0016
28	Intangibles	cA*(r17-r6)	0.002091	0.0000	0.0001	0.0001	0.0001	0.0008	0.0001
29	***Directly Attributed Costs***	***Sum r20:r28***		0.0034	0.0068	0.0068	0.0110	0.0921	0.0068
30									
31	***TELRIC***	***r17 + r29***		0.0178	0.0357	0.0357	0.0572	0.4808	0.0357
32									
33	***Common***								
34	Executive Expense	cA*(r31-r6)	0.007805	0.0001	0.0003	0.0003	0.0004	0.0038	0.0003
35	Planning Expense	cA*(r31-r6)	0.000580	0.0000	0.0000	0.0000	0.0000	0.0003	0.0000
36	External Relations Expense	cA*(r31-r6)	0.013029	0.0002	0.0005	0.0005	0.0007	0.0063	0.0005
37	Legal Expense	cA*(r31-r6)	0.006148	0.0001	0.0002	0.0002	0.0004	0.0030	0.0002
38	Other Procurement Expense	cA*(r31-r6)	0.002359	0.0000	0.0001	0.0001	0.0001	0.0011	0.0001
39	Research & Development Expense	cA*(r31-r6)	0.000036	0.0000	0.0000	0.0000	0.0000	0.0000	0.0000
40	Other General and Admin Expense	cA*(r31-r6)	0.015212	0.0003	0.0005	0.0005	0.0009	0.0073	0.0005
41	***Common Costs***	***Sum r34:r40***		0.0008	0.0016	0.0016	0.0026	0.0217	0.0016
42									
43	***TELRIC + Common Costs***	***r31 + r41***		0.0186	0.0374	0.0374	0.0598	0.5026	0.0373

Total Product Costs

Row	7/12/01 11:14 AM South Dakota	Source or Calculation	Factor Value	Centrex Plus to Centrex Plus	Centrex Plus to IC Carrier	Centrex Plus to PBX/Key Blocked	Centrex Plus to PBX/Key Non-Blocked	CFBL - All Calls	CFBL - Incoming Only
			A	AR	AS	AT	AU	AV	AW
1	Investment	sl r"Total" cD		222.3361	222.3361	222.3361	222.3361	0.7821	0.7821
2									
3	***Investment Based Costs***	***sl r"Total" cK***		3.6862	3.6862	3.6862	3.6862	0.0130	0.0130
4									
5	Direct Expenses			0.0000	0.0000	0.0000	0.0000	0.0000	0.0000
6	Miscellaneous Expenses			0.0000	0.0000	0.0000	0.0000	0.0000	0.0000
7	Billing & Collection - PL			0.0000	0.0000	0.0000	0.0000	0.0000	0.0000
8	***Investment Based + Direct Costs***			3.6862	3.6862	3.6862	3.6862	0.0130	0.0130
9									
10	***Directly Assigned***								
11	Product Management Expense	cA*(r8-r6)	0.025565	0.0942	0.0942	0.0942	0.0942	0.0003	0.0003
12	Sales Expense	cA*(r8-r6)	0.009225	0.0340	0.0340	0.0340	0.0340	0.0001	0.0001
13	Product Advertising Expense	cA*(r8-r6)	0.000000	0.0000	0.0000	0.0000	0.0000	0.0000	0.0000
14	Business Fees (Other Operating Taxes)	cA*(Sum(r8:r13)-r6)	0.002025	0.0077	0.0077	0.0077	0.0077	0.0000	0.0000
15	***Directly Assigned Costs***	***Sum r11:r14***		0.1360	0.1360	0.1360	0.1360	0.0005	0.0005
16									
17	***Total Direct Costs***	***r8 + r15***		3.8221	3.8221	3.8221	3.8221	0.0134	0.0134
18									
19	***Directly Attributed***								
20	Network Operations	cA*(r17-r6)	0.040880	0.1562	0.1562	0.1562	0.1562	0.0005	0.0005
21	Network Support Assets	cA*(r17-r6)	0.015364	0.0587	0.0587	0.0587	0.0587	0.0002	0.0002
22	General Support Assets	cA*(r17-r6)	0.069508	0.2657	0.2657	0.2657	0.2657	0.0009	0.0009
23	General Purpose Computers	cA*(r17-r6)	0.034714	0.1327	0.1327	0.1327	0.1327	0.0005	0.0005
24	Uncollectible	cA*(r17-r6)	0.000401	0.0015	0.0015	0.0015	0.0015	0.0000	0.0000
25	Accounting & Finance Expense	cA*(r17-r6)	0.008839	0.0338	0.0338	0.0338	0.0338	0.0001	0.0001
26	Human Resources Expense	cA*(r17-r6)	0.008145	0.0311	0.0311	0.0311	0.0311	0.0001	0.0001
27	Information Management Expense	cA*(r17-r6)	0.057009	0.2179	0.2179	0.2179	0.2179	0.0008	0.0008
28	Intangibles	cA*(r17-r6)	0.002091	0.0080	0.0080	0.0080	0.0080	0.0000	0.0000
29	***Directly Attributed Costs***	***Sum r20:r28***		0.9057	0.9057	0.9057	0.9057	0.0032	0.0032
30									
31	***TELRIC***	***r17 + r29***		4.7278	4.7278	4.7278	4.7278	0.0166	0.0166
32									
33	***Common***								
34	Executive Expense	cA*(r31-r6)	0.007805	0.0369	0.0369	0.0369	0.0369	0.0001	0.0001
35	Planning Expense	cA*(r31-r6)	0.000580	0.0027	0.0027	0.0027	0.0027	0.0000	0.0000
36	External Relations Expense	cA*(r31-r6)	0.013029	0.0616	0.0616	0.0616	0.0616	0.0002	0.0002
37	Legal Expense	cA*(r31-r6)	0.006148	0.0291	0.0291	0.0291	0.0291	0.0001	0.0001
38	Other Procurement Expense	cA*(r31-r6)	0.002359	0.0112	0.0112	0.0112	0.0112	0.0000	0.0000
39	Research & Development Expense	cA*(r31-r6)	0.000036	0.0002	0.0002	0.0002	0.0002	0.0000	0.0000
40	Other General and Admin Expense	cA*(r31-r6)	0.015212	0.0719	0.0719	0.0719	0.0719	0.0003	0.0003
41	***Common Costs***	***Sum r34:r40***		0.2135	0.2135	0.2135	0.2135	0.0008	0.0008
42									
43	***TELRIC + Common Costs***	***r31 + r41***		4.9413	4.9413	4.9413	4.9413	0.0174	0.0174

Total Product Costs

Row	7/12/01 11:14 AM South Dakota	Source or Calculation	Factor Value	CFDA Incoming Only	CLASS - Anonymous Call Rejection	CLASS - Call Waiting ID	CLASS - Calling Name & Number	CLASS - Calling Number Delivery	CLASS - Calling Number Delivery - Blocking
			A	AX	AY	AZ	BA	BB	BC
1	Investment	sl r"Total" cD		0.3536	10.7787	1.2528	14.4073	1.2112	11.3122
2									
3	***Investment Based Costs***	***sl r"Total" cK***		0.0059	0.1787	0.0208	0.2389	0.0201	0.1875
4									
5	Direct Expenses			0.0000	0.0000	0.0000	0.0000	0.0000	0.0000
6	Miscellaneous Expenses			0.0000	0.0000	0.0000	0.0000	0.0000	0.0000
7	Billing & Collection - PL			0.0000	0.0000	0.0000	0.0000	0.0000	0.0000
8	***Investment Based + Direct Costs***			0.0059	0.1787	0.0208	0.2389	0.0201	0.1875
9									
10	***Directly Assigned***								
11	Product Management Expense	cA*(r8-r6)	0.025565	0.0001	0.0046	0.0005	0.0061	0.0005	0.0048
12	Sales Expense	cA*(r8-r6)	0.009225	0.0001	0.0016	0.0002	0.0022	0.0002	0.0017
13	Product Advertising Expense	cA*(r8-r6)	0.000000	0.0000	0.0000	0.0000	0.0000	0.0000	0.0000
14	Business Fees (Other Operating Taxes)	cA*(Sum(r8:r13)-r6)	0.002025	0.0000	0.0004	0.0000	0.0005	0.0000	0.0004
15	***Directly Assigned Costs***	***Sum r11:r14***		0.0002	0.0066	0.0008	0.0088	0.0007	0.0069
16									
17	***Total Direct Costs***	***r8 + r15***		0.0061	0.1853	0.0215	0.2477	0.0208	0.1945
18									
19	***Directly Attributed***								
20	Network Operations	cA*(r17-r6)	0.040880	0.0002	0.0076	0.0009	0.0101	0.0009	0.0079
21	Network Support Assets	cA*(r17-r6)	0.015364	0.0001	0.0028	0.0003	0.0038	0.0003	0.0030
22	General Support Assets	cA*(r17-r6)	0.069508	0.0004	0.0129	0.0015	0.0172	0.0014	0.0135
23	General Purpose Computers	cA*(r17-r6)	0.034714	0.0002	0.0064	0.0007	0.0086	0.0007	0.0068
24	Uncollectible	cA*(r17-r6)	0.000401	0.0000	0.0001	0.0000	0.0001	0.0000	0.0001
25	Accounting & Finance Expense	cA*(r17-r6)	0.008839	0.0001	0.0016	0.0002	0.0022	0.0002	0.0017
26	Human Resources Expense	cA*(r17-r6)	0.008145	0.0000	0.0015	0.0002	0.0020	0.0002	0.0016
27	Information Management Expense	cA*(r17-r6)	0.057009	0.0003	0.0106	0.0012	0.0141	0.0012	0.0111
28	Intangibles	cA*(r17-r6)	0.002091	0.0000	0.0004	0.0000	0.0005	0.0000	0.0004
29	***Directly Attributed Costs***	***Sum r20:r28***		0.0014	0.0439	0.0051	0.0587	0.0049	0.0461
30									
31	***TELRIC***	***r17 + r29***		0.0075	0.2292	0.0266	0.3064	0.0258	0.2405
32									
33	***Common***								
34	Executive Expense	cA*(r31-r6)	0.007805	0.0001	0.0018	0.0002	0.0024	0.0002	0.0019
35	Planning Expense	cA*(r31-r6)	0.000580	0.0000	0.0001	0.0000	0.0002	0.0000	0.0001
36	External Relations Expense	cA*(r31-r6)	0.013029	0.0001	0.0030	0.0003	0.0040	0.0003	0.0031
37	Legal Expense	cA*(r31-r6)	0.006148	0.0000	0.0014	0.0002	0.0019	0.0002	0.0015
38	Other Procurement Expense	cA*(r31-r6)	0.002359	0.0000	0.0005	0.0001	0.0007	0.0001	0.0006
39	Research & Development Expense	cA*(r31-r6)	0.000036	0.0000	0.0000	0.0000	0.0000	0.0000	0.0000
40	Other General and Admin Expense	cA*(r31-r6)	0.015212	0.0001	0.0035	0.0004	0.0047	0.0004	0.0037
41	***Common Costs***	***Sum r34:r40***		0.0003	0.0104	0.0012	0.0138	0.0012	0.0109
42									
43	***TELRIC + Common Costs***	***r31 + r41***		0.0079	0.2396	0.0278	0.3202	0.0269	0.2514

Total Product Costs

Row	7/12/01 11:14 AM South Dakota	Source or Calculation	Factor Value	CLASS - Continuous Redial	CLASS - Last Call Return	CLASS - Priority Calling	CLASS - Selective Call Forwarding	CLASS - Selective Call Rejection	Conference Calling - Meet Me
			A	BD	BE	BF	BG	BH	BI
1	**Investment**	sl r"Total" cD		8.6514	2.4277	4.9172	4.3983	10.0759	596.1532
2									
3	***Investment Based Costs***	***sl r"Total" cK***		0.1434	0.0402	0.0815	0.0729	0.1670	9.8838
4									
5	Direct Expenses			0.0000	0.0000	0.0000	0.0000	0.0000	0.0000
6	Miscellaneous Expenses			0.0000	0.0000	0.0000	0.0000	0.0000	0.0000
7	Billing & Collection - PL			0.0000	0.0000	0.0000	0.0000	0.0000	0.0000
8	***Investment Based + Direct Costs***			0.1434	0.0402	0.0815	0.0729	0.1670	9.8838
9									
10	***Directly Assigned***								
11	Product Management Expense	cA*(r8-r6)	0.025565	0.0037	0.0010	0.0021	0.0019	0.0043	0.2527
12	Sales Expense	cA*(r8-r6)	0.009225	0.0013	0.0004	0.0008	0.0007	0.0015	0.0912
13	Product Advertising Expense	cA*(r8-r6)	0.000000	0.0000	0.0000	0.0000	0.0000	0.0000	0.0000
14	Business Fees (Other Operating Taxes)	cA*(Sum(r8:r13)-r6)	0.002025	0.0003	0.0001	0.0002	0.0002	0.0004	0.0207
15	***Directly Assigned Costs***	***Sum r11:r14***		0.0053	0.0015	0.0030	0.0027	0.0062	0.3646
16									
17	***Total Direct Costs***	***r8 + r15***		0.1487	0.0417	0.0845	0.0756	0.1732	10.2483
18									
19	***Directly Attributed***								
20	Network Operations	cA*(r17-r6)	0.040880	0.0061	0.0017	0.0035	0.0031	0.0071	0.4190
21	Network Support Assets	cA*(r17-r6)	0.015364	0.0023	0.0006	0.0013	0.0012	0.0027	0.1575
22	General Support Assets	cA*(r17-r6)	0.069508	0.0103	0.0029	0.0059	0.0053	0.0120	0.7123
23	General Purpose Computers	cA*(r17-r6)	0.034714	0.0052	0.0014	0.0029	0.0026	0.0060	0.3558
24	Uncollectible	cA*(r17-r6)	0.000401	0.0001	0.0000	0.0000	0.0000	0.0001	0.0041
25	Accounting & Finance Expense	cA*(r17-r6)	0.008839	0.0013	0.0004	0.0007	0.0007	0.0015	0.0906
26	Human Resources Expense	cA*(r17-r6)	0.008145	0.0012	0.0003	0.0007	0.0006	0.0014	0.0835
27	Information Management Expense	cA*(r17-r6)	0.057009	0.0085	0.0024	0.0048	0.0043	0.0099	0.5842
28	Intangibles	cA*(r17-r6)	0.002091	0.0003	0.0001	0.0002	0.0002	0.0004	0.0214
29	***Directly Attributed Costs***	***Sum r20:r28***		0.0352	0.0099	0.0200	0.0179	0.0410	2.4284
30									
31	***TELRIC***	***r17 + r29***		0.1840	0.0516	0.1046	0.0935	0.2143	12.6767
32									
33	***Common***								
34	Executive Expense	cA*(r31-r6)	0.007805	0.0014	0.0004	0.0008	0.0007	0.0017	0.0989
35	Planning Expense	cA*(r31-r6)	0.000580	0.0001	0.0000	0.0001	0.0001	0.0001	0.0074
36	External Relations Expense	cA*(r31-r6)	0.013029	0.0024	0.0007	0.0014	0.0012	0.0028	0.1652
37	Legal Expense	cA*(r31-r6)	0.006148	0.0011	0.0003	0.0006	0.0006	0.0013	0.0779
38	Other Procurement Expense	cA*(r31-r6)	0.002359	0.0004	0.0001	0.0002	0.0002	0.0005	0.0299
39	Research & Development Expense	cA*(r31-r6)	0.000036	0.0000	0.0000	0.0000	0.0000	0.0000	0.0005
40	Other General and Admin Expense	cA*(r31-r6)	0.015212	0.0028	0.0008	0.0016	0.0014	0.0033	0.1928
41	***Common Costs***	***Sum r34:r40***		0.0083	0.0023	0.0047	0.0042	0.0097	0.5726
42									
43	***TELRIC + Common Costs***	***r31 + r41***		0.1923	0.0540	0.1093	0.0978	0.2239	13.2493

Row	7/12/01 11:14 AM South Dakota	Source or Calculation	Factor Value	Conference Calling - Preset	Custom Ringing First Line (Short/Long/Short)	Custom Ringing First Line (Short/Short)	Custom Ringing First Line (Short/Short/Long)	Custom Ringing Second Line (Short/Long/Short)	Custom Ringing Second Line (Short/Short)
			A	BJ	BK	BL	BM	BN	BO
1	Investment	sl r"Total" cD		435.4496	0.5446	0.5446	0.5446	0.5108	0.5108
2									
3	***Investment Based Costs***	***sl r"Total" cK***		7.2194	0.0090	0.0090	0.0090	0.0085	0.0085
4									
5	Direct Expenses			0.0000	0.0000	0.0000	0.0000	0.0000	0.0000
6	Miscellaneous Expenses			0.0000	0.0000	0.0000	0.0000	0.0000	0.0000
7	Billing & Collection - PL			0.0000	0.0000	0.0000	0.0000	0.0000	0.0000
8	***Investment Based + Direct Costs***			7.2194	0.0090	0.0090	0.0090	0.0085	0.0085
9									
10	***Directly Assigned***								
11	Product Management Expense	cA*(r8-r6)	0.025565	0.1846	0.0002	0.0002	0.0002	0.0002	0.0002
12	Sales Expense	cA*(r8-r6)	0.009225	0.0666	0.0001	0.0001	0.0001	0.0001	0.0001
13	Product Advertising Expense	cA*(r8-r6)	0.000000	0.0000	0.0000	0.0000	0.0000	0.0000	0.0000
14	Business Fees (Other Operating Taxes)	cA*(Sum(r8:r13)-r6)	0.002025	0.0151	0.0000	0.0000	0.0000	0.0000	0.0000
15	***Directly Assigned Costs***	***Sum r11:r14***		0.2663	0.0003	0.0003	0.0003	0.0003	0.0003
16									
17	***Total Direct Costs***	***r8 + r15***		7.4857	0.0094	0.0094	0.0094	0.0088	0.0088
18									
19	***Directly Attributed***								
20	Network Operations	cA*(r17-r6)	0.040880	0.3060	0.0004	0.0004	0.0004	0.0004	0.0004
21	Network Support Assets	cA*(r17-r6)	0.015364	0.1150	0.0001	0.0001	0.0001	0.0001	0.0001
22	General Support Assets	cA*(r17-r6)	0.069508	0.5203	0.0007	0.0007	0.0007	0.0006	0.0006
23	General Purpose Computers	cA*(r17-r6)	0.034714	0.2599	0.0003	0.0003	0.0003	0.0003	0.0003
24	Uncollectible	cA*(r17-r6)	0.000401	0.0030	0.0000	0.0000	0.0000	0.0000	0.0000
25	Accounting & Finance Expense	cA*(r17-r6)	0.008839	0.0662	0.0001	0.0001	0.0001	0.0001	0.0001
26	Human Resources Expense	cA*(r17-r6)	0.008145	0.0610	0.0001	0.0001	0.0001	0.0001	0.0001
27	Information Management Expense	cA*(r17-r6)	0.057009	0.4268	0.0005	0.0005	0.0005	0.0005	0.0005
28	Intangibles	cA*(r17-r6)	0.002091	0.0157	0.0000	0.0000	0.0000	0.0000	0.0000
29	***Directly Attributed Costs***	***Sum r20:r28***		1.7737	0.0022	0.0022	0.0022	0.0021	0.0021
30									
31	***TELRIC***	***r17 + r29***		9.2595	0.0116	0.0116	0.0116	0.0109	0.0109
32									
33	***Common***								
34	Executive Expense	cA*(r31-r6)	0.007805	0.0723	0.0001	0.0001	0.0001	0.0001	0.0001
35	Planning Expense	cA*(r31-r6)	0.000580	0.0054	0.0000	0.0000	0.0000	0.0000	0.0000
36	External Relations Expense	cA*(r31-r6)	0.013029	0.1206	0.0002	0.0002	0.0002	0.0001	0.0001
37	Legal Expense	cA*(r31-r6)	0.006148	0.0569	0.0001	0.0001	0.0001	0.0001	0.0001
38	Other Procurement Expense	cA*(r31-r6)	0.002359	0.0218	0.0000	0.0000	0.0000	0.0000	0.0000
39	Research & Development Expense	cA*(r31-r6)	0.000036	0.0003	0.0000	0.0000	0.0000	0.0000	0.0000
40	Other General and Admin Expense	cA*(r31-r6)	0.015212	0.1409	0.0002	0.0002	0.0002	0.0002	0.0002
41	***Common Costs***	***Sum r34:r40***		0.4182	0.0005	0.0005	0.0005	0.0005	0.0005
42									
43	***TELRIC + Common Costs***	***r31 + r41***		9.6777	0.0121	0.0121	0.0121	0.0114	0.0114

Row	7/12/01 11:14 AM South Dakota	Source or Calculation	Factor Value	Custom Ringing Second Line (Short/Short/Long)	Custom Ringing Third Line (Short/Long/Short)	Custom Ringing Third Line (Short/Short)	Custom Ringing Third Line (Short/Short/Long)	Data Call Protection (DMS 100)	Dir Sta Sel/Busy Lamp Fld per arrangement
			A	BP	BQ	BR	BS	BT	BU
1	Investment	sl r"Total" cD		0.5108	0.4084	0.4084	0.4084	0.0000	72.1810
2									
3	***Investment Based Costs***	***sl r"Total" cK***		0.0085	0.0068	0.0068	0.0068	0.0000	1.1967
4									
5	Direct Expenses			0.0000	0.0000	0.0000	0.0000	0.0000	0.0000
6	Miscellaneous Expenses			0.0000	0.0000	0.0000	0.0000	0.0000	0.0000
7	Billing & Collection - PL			0.0000	0.0000	0.0000	0.0000	0.0000	0.0000
8	***Investment Based + Direct Costs***			0.0085	0.0068	0.0068	0.0068	0.0000	1.1967
9									
10	***Directly Assigned***								
11	Product Management Expense	cA*(r8-r6)	0.025565	0.0002	0.0002	0.0002	0.0002	0.0000	0.0306
12	Sales Expense	cA*(r8-r6)	0.009225	0.0001	0.0001	0.0001	0.0001	0.0000	0.0110
13	Product Advertising Expense	cA*(r8-r6)	0.000000	0.0000	0.0000	0.0000	0.0000	0.0000	0.0000
14	Business Fees (Other Operating Taxes)	cA*(Sum(r8:r13)-r6)	0.002025	0.0000	0.0000	0.0000	0.0000	0.0000	0.0025
15	***Directly Assigned Costs***	***Sum r11:r14***		0.0003	0.0002	0.0002	0.0002	0.0000	0.0441
16									
17	***Total Direct Costs***	***r8 + r15***		0.0088	0.0070	0.0070	0.0070	0.0000	1.2408
18									
19	***Directly Attributed***								
20	Network Operations	cA*(r17-r6)	0.040880	0.0004	0.0003	0.0003	0.0003	0.0000	0.0507
21	Network Support Assets	cA*(r17-r6)	0.015364	0.0001	0.0001	0.0001	0.0001	0.0000	0.0191
22	General Support Assets	cA*(r17-r6)	0.069508	0.0006	0.0005	0.0005	0.0005	0.0000	0.0862
23	General Purpose Computers	cA*(r17-r6)	0.034714	0.0003	0.0002	0.0002	0.0002	0.0000	0.0431
24	Uncollectible	cA*(r17-r6)	0.000401	0.0000	0.0000	0.0000	0.0000	0.0000	0.0005
25	Accounting & Finance Expense	cA*(r17-r6)	0.008839	0.0001	0.0001	0.0001	0.0001	0.0000	0.0110
26	Human Resources Expense	cA*(r17-r6)	0.008145	0.0001	0.0001	0.0001	0.0001	0.0000	0.0101
27	Information Management Expense	cA*(r17-r6)	0.057009	0.0005	0.0004	0.0004	0.0004	0.0000	0.0707
28	Intangibles	cA*(r17-r6)	0.002091	0.0000	0.0000	0.0000	0.0000	0.0000	0.0026
29	***Directly Attributed Costs***	***Sum r20:r28***		0.0021	0.0017	0.0017	0.0017	0.0000	0.2940
30									
31	***TELRIC***	***r17 + r29***		0.0109	0.0087	0.0087	0.0087	0.0000	1.5349
32									
33	***Common***								
34	Executive Expense	cA*(r31-r6)	0.007805	0.0001	0.0001	0.0001	0.0001	0.0000	0.0120
35	Planning Expense	cA*(r31-r6)	0.000580	0.0000	0.0000	0.0000	0.0000	0.0000	0.0009
36	External Relations Expense	cA*(r31-r6)	0.013029	0.0001	0.0001	0.0001	0.0001	0.0000	0.0200
37	Legal Expense	cA*(r31-r6)	0.006148	0.0001	0.0001	0.0001	0.0001	0.0000	0.0094
38	Other Procurement Expense	cA*(r31-r6)	0.002359	0.0000	0.0000	0.0000	0.0000	0.0000	0.0036
39	Research & Development Expense	cA*(r31-r6)	0.000036	0.0000	0.0000	0.0000	0.0000	0.0000	0.0001
40	Other General and Admin Expense	cA*(r31-r6)	0.015212	0.0002	0.0001	0.0001	0.0001	0.0000	0.0233
41	***Common Costs***	***Sum r34:r40***		0.0005	0.0004	0.0004	0.0004	0.0000	0.0693
42									
43	***TELRIC + Common Costs***	***r31 + r41***		0.0114	0.0091	0.0091	0.0091	0.0000	1.6042

Row	7/12/01 11:14 AM South Dakota	Source or Calculation	Factor Value	Directed Call Pickup with Barge-in	Directed Call Pickup without Barge-in	Distinctive Ring/Distinctive Call Waiting	Distinctive Ringing	EBS - Set Interface - per station line	Executive Busy Overide
			A	BV	BW	BX	BY	BZ	CA
1	**Investment**	sl r"Total" cD		4.4321	1.1377	0.5559	0.5446	56.1239	0.0590
2									
3	***Investment Based Costs***	***sl r"Total" cK***		0.0735	0.0189	0.0092	0.0090	0.9305	0.0010
4									
5	Direct Expenses			0.0000	0.0000	0.0000	0.0000	0.0000	0.0000
6	Miscellaneous Expenses			0.0000	0.0000	0.0000	0.0000	0.0000	0.0000
7	Billing & Collection - PL			0.0000	0.0000	0.0000	0.0000	0.0000	0.0000
8	***Investment Based + Direct Costs***			0.0735	0.0189	0.0092	0.0090	0.9305	0.0010
9									
10	***Directly Assigned***								
11	Product Management Expense	cA*(r8-r6)	0.025565	0.0019	0.0005	0.0002	0.0002	0.0238	0.0000
12	Sales Expense	cA*(r8-r6)	0.009225	0.0007	0.0002	0.0001	0.0001	0.0086	0.0000
13	Product Advertising Expense	cA*(r8-r6)	0.000000	0.0000	0.0000	0.0000	0.0000	0.0000	0.0000
14	Business Fees (Other Operating Taxes)	cA*(Sum(r8:r13)-r6)	0.002025	0.0002	0.0000	0.0000	0.0000	0.0019	0.0000
15	***Directly Assigned Costs***	***Sum r11:r14***		0.0027	0.0007	0.0003	0.0003	0.0343	0.0000
16									
17	***Total Direct Costs***	***r8 + r15***		0.0762	0.0196	0.0096	0.0094	0.9648	0.0010
18									
19	***Directly Attributed***								
20	Network Operations	cA*(r17-r6)	0.040880	0.0031	0.0008	0.0004	0.0004	0.0394	0.0000
21	Network Support Assets	cA*(r17-r6)	0.015364	0.0012	0.0003	0.0001	0.0001	0.0148	0.0000
22	General Support Assets	cA*(r17-r6)	0.069508	0.0053	0.0014	0.0007	0.0007	0.0671	0.0001
23	General Purpose Computers	cA*(r17-r6)	0.034714	0.0026	0.0007	0.0003	0.0003	0.0335	0.0000
24	Uncollectible	cA*(r17-r6)	0.000401	0.0000	0.0000	0.0000	0.0000	0.0004	0.0000
25	Accounting & Finance Expense	cA*(r17-r6)	0.008839	0.0007	0.0002	0.0001	0.0001	0.0085	0.0000
26	Human Resources Expense	cA*(r17-r6)	0.008145	0.0006	0.0002	0.0001	0.0001	0.0079	0.0000
27	Information Management Expense	cA*(r17-r6)	0.057009	0.0043	0.0011	0.0005	0.0005	0.0550	0.0001
28	Intangibles	cA*(r17-r6)	0.002091	0.0002	0.0000	0.0000	0.0000	0.0020	0.0000
29	***Directly Attributed Costs***	***Sum r20:r28***		0.0181	0.0046	0.0023	0.0022	0.2286	0.0002
30									
31	***TELRIC***	***r17 + r29***		0.0942	0.0242	0.0118	0.0116	1.1934	0.0013
32									
33	***Common***								
34	Executive Expense	cA*(r31-r6)	0.007805	0.0007	0.0002	0.0001	0.0001	0.0093	0.0000
35	Planning Expense	cA*(r31-r6)	0.000580	0.0001	0.0000	0.0000	0.0000	0.0007	0.0000
36	External Relations Expense	cA*(r31-r6)	0.013029	0.0012	0.0003	0.0002	0.0002	0.0155	0.0000
37	Legal Expense	cA*(r31-r6)	0.006148	0.0006	0.0001	0.0001	0.0001	0.0073	0.0000
38	Other Procurement Expense	cA*(r31-r6)	0.002359	0.0002	0.0001	0.0000	0.0000	0.0028	0.0000
39	Research & Development Expense	cA*(r31-r6)	0.000036	0.0000	0.0000	0.0000	0.0000	0.0000	0.0000
40	Other General and Admin Expense	cA*(r31-r6)	0.015212	0.0014	0.0004	0.0002	0.0002	0.0182	0.0000
41	***Common Costs***	***Sum r34:r40***		0.0043	0.0011	0.0005	0.0005	0.0539	0.0001
42									
43	***TELRIC + Common Costs***	***r31 + r41***		0.0985	0.0253	0.0124	0.0121	1.2473	0.0013

Row	7/12/01 11:14 AM South Dakota	Source or Calculation	Factor Value	Expensive Route Warning Tone-per system	Facility Restriction Level - per system	Feature Display	Group Intercom	Hot Line - per line	Hunting: Multiposition Circular Hunting
			A	CB	CC	CD	CE	CF	CG
1	Investment	sl r"Total" cD		0.0000	0.0000	0.0087	3.3718	2.3156	8.1161
2									
3	***Investment Based Costs***	***sl r"Total" cK***		0.0000	0.0000	0.0001	0.0559	0.0384	0.1346
4									
5	Direct Expenses			0.0000	0.0000	0.0000	0.0000	0.0000	0.0000
6	Miscellaneous Expenses			0.0000	0.0000	0.0000	0.0000	0.0000	0.0000
7	Billing & Collection - PL			0.0000	0.0000	0.0000	0.0000	0.0000	0.0000
8	***Investment Based + Direct Costs***			0.0000	0.0000	0.0001	0.0559	0.0384	0.1346
9									
10	***Directly Assigned***								
11	Product Management Expense	cA*(r8-r6)	0.025565	0.0000	0.0000	0.0000	0.0014	0.0010	0.0034
12	Sales Expense	cA*(r8-r6)	0.009225	0.0000	0.0000	0.0000	0.0005	0.0004	0.0012
13	Product Advertising Expense	cA*(r8-r6)	0.000000	0.0000	0.0000	0.0000	0.0000	0.0000	0.0000
14	Business Fees (Other Operating Taxes)	cA*(Sum(r8:r13)-r6)	0.002025	0.0000	0.0000	0.0000	0.0001	0.0001	0.0003
15	***Directly Assigned Costs***	***Sum r11:r14***		0.0000	0.0000	0.0000	0.0021	0.0014	0.0050
16									
17	***Total Direct Costs***	***r8 + r15***		0.0000	0.0000	0.0001	0.0580	0.0398	0.1395
18									
19	***Directly Attributed***								
20	Network Operations	cA*(r17-r6)	0.040880	0.0000	0.0000	0.0000	0.0024	0.0016	0.0057
21	Network Support Assets	cA*(r17-r6)	0.015364	0.0000	0.0000	0.0000	0.0009	0.0006	0.0021
22	General Support Assets	cA*(r17-r6)	0.069508	0.0000	0.0000	0.0000	0.0040	0.0028	0.0097
23	General Purpose Computers	cA*(r17-r6)	0.034714	0.0000	0.0000	0.0000	0.0020	0.0014	0.0048
24	Uncollectible	cA*(r17-r6)	0.000401	0.0000	0.0000	0.0000	0.0000	0.0000	0.0001
25	Accounting & Finance Expense	cA*(r17-r6)	0.008839	0.0000	0.0000	0.0000	0.0005	0.0004	0.0012
26	Human Resources Expense	cA*(r17-r6)	0.008145	0.0000	0.0000	0.0000	0.0005	0.0003	0.0011
27	Information Management Expense	cA*(r17-r6)	0.057009	0.0000	0.0000	0.0000	0.0033	0.0023	0.0080
28	Intangibles	cA*(r17-r6)	0.002091	0.0000	0.0000	0.0000	0.0001	0.0001	0.0003
29	***Directly Attributed Costs***	***Sum r20:r28***		0.0000	0.0000	0.0000	0.0137	0.0094	0.0331
30									
31	***TELRIC***	***r17 + r29***		0.0000	0.0000	0.0002	0.0717	0.0492	0.1726
32									
33	***Common***								
34	Executive Expense	cA*(r31-r6)	0.007805	0.0000	0.0000	0.0000	0.0006	0.0004	0.0013
35	Planning Expense	cA*(r31-r6)	0.000580	0.0000	0.0000	0.0000	0.0000	0.0000	0.0001
36	External Relations Expense	cA*(r31-r6)	0.013029	0.0000	0.0000	0.0000	0.0009	0.0006	0.0022
37	Legal Expense	cA*(r31-r6)	0.006148	0.0000	0.0000	0.0000	0.0004	0.0003	0.0011
38	Other Procurement Expense	cA*(r31-r6)	0.002359	0.0000	0.0000	0.0000	0.0002	0.0001	0.0004
39	Research & Development Expense	cA*(r31-r6)	0.000036	0.0000	0.0000	0.0000	0.0000	0.0000	0.0000
40	Other General and Admin Expense	cA*(r31-r6)	0.015212	0.0000	0.0000	0.0000	0.0011	0.0007	0.0026
41	***Common Costs***	***Sum r34:r40***		0.0000	0.0000	0.0000	0.0032	0.0022	0.0078
42									
43	***TELRIC + Common Costs***	***r31 + r41***		0.0000	0.0000	0.0002	0.0749	0.0515	0.1804

Row	7/12/01 11:14 AM South Dakota	Source or Calculation	Factor Value	Hunting: Multiposition Hunt Queuing	Hunting: Multiposition Series Hunting	Hunting: Multiposition with Announcement in Queue	Hunting: Multiposition with Music in Queue	Incoming Calls Barred	International Direct Dial Blocking
			A	CH	CI	CJ	CK	CL	CM
1	Investment	sl r"Total" cD		6.3387	8.1161	128.4308	43.7204	0.2927	0.4313
2									
3	***Investment Based Costs***	***sl r"Total" cK***		0.1051	0.1346	2.1293	0.7249	0.0049	0.0072
4									
5	Direct Expenses			0.0000	0.0000	0.0000	0.0000	0.0000	0.0000
6	Miscellaneous Expenses			0.0000	0.0000	0.0000	0.0000	0.0000	0.0000
7	Billing & Collection - PL			0.0000	0.0000	0.0000	0.0000	0.0000	0.0000
8	***Investment Based + Direct Costs***			0.1051	0.1346	2.1293	0.7249	0.0049	0.0072
9									
10	***Directly Assigned***								
11	Product Management Expense	cA*(r8-r6)	0.025565	0.0027	0.0034	0.0544	0.0185	0.0001	0.0002
12	Sales Expense	cA*(r8-r6)	0.009225	0.0010	0.0012	0.0196	0.0067	0.0000	0.0001
13	Product Advertising Expense	cA*(r8-r6)	0.000000	0.0000	0.0000	0.0000	0.0000	0.0000	0.0000
14	Business Fees (Other Operating Taxes)	cA*(Sum(r8:r13)-r6)	0.002025	0.0002	0.0003	0.0045	0.0015	0.0000	0.0000
15	***Directly Assigned Costs***	***Sum r11:r14***		0.0039	0.0050	0.0785	0.0267	0.0002	0.0003
16									
17	***Total Direct Costs***	***r8 + r15***		0.1090	0.1395	2.2078	0.7516	0.0050	0.0074
18									
19	***Directly Attributed***								
20	Network Operations	cA*(r17-r6)	0.040880	0.0045	0.0057	0.0903	0.0307	0.0002	0.0003
21	Network Support Assets	cA*(r17-r6)	0.015364	0.0017	0.0021	0.0339	0.0115	0.0001	0.0001
22	General Support Assets	cA*(r17-r6)	0.069508	0.0076	0.0097	0.1535	0.0522	0.0003	0.0005
23	General Purpose Computers	cA*(r17-r6)	0.034714	0.0038	0.0048	0.0766	0.0261	0.0002	0.0003
24	Uncollectible	cA*(r17-r6)	0.000401	0.0000	0.0001	0.0009	0.0003	0.0000	0.0000
25	Accounting & Finance Expense	cA*(r17-r6)	0.008839	0.0010	0.0012	0.0195	0.0066	0.0000	0.0001
26	Human Resources Expense	cA*(r17-r6)	0.008145	0.0009	0.0011	0.0180	0.0061	0.0000	0.0001
27	Information Management Expense	cA*(r17-r6)	0.057009	0.0062	0.0080	0.1259	0.0428	0.0003	0.0004
28	Intangibles	cA*(r17-r6)	0.002091	0.0002	0.0003	0.0046	0.0016	0.0000	0.0000
29	***Directly Attributed Costs***	***Sum r20:r28***		0.0258	0.0331	0.5231	0.1781	0.0012	0.0018
30									
31	***TELRIC***	***r17 + r29***		0.1348	0.1726	2.7310	0.9297	0.0062	0.0092
32									
33	***Common***								
34	Executive Expense	cA*(r31-r6)	0.007805	0.0011	0.0013	0.0213	0.0073	0.0000	0.0001
35	Planning Expense	cA*(r31-r6)	0.000580	0.0001	0.0001	0.0016	0.0005	0.0000	0.0000
36	External Relations Expense	cA*(r31-r6)	0.013029	0.0018	0.0022	0.0356	0.0121	0.0001	0.0001
37	Legal Expense	cA*(r31-r6)	0.006148	0.0008	0.0011	0.0168	0.0057	0.0000	0.0001
38	Other Procurement Expense	cA*(r31-r6)	0.002359	0.0003	0.0004	0.0064	0.0022	0.0000	0.0000
39	Research & Development Expense	cA*(r31-r6)	0.000036	0.0000	0.0000	0.0001	0.0000	0.0000	0.0000
40	Other General and Admin Expense	cA*(r31-r6)	0.015212	0.0021	0.0026	0.0415	0.0141	0.0001	0.0001
41	***Common Costs***	***Sum r34:r40***		0.0061	0.0078	0.1234	0.0420	0.0003	0.0004
42									
43	***TELRIC + Common Costs***	***r31 + r41***		0.1409	0.1804	2.8543	0.9717	0.0065	0.0096

Row	7/12/01 11:14 AM South Dakota	Source or Calculation	Factor Value	ISDN Short Hunt	Line Side Answer Supervision	Loudspeaker Paging - per trunk group	Make Busy Arrangements - per group	Make Busy Arrangements - per line	Message Center - per main station line
			A	CN	CO	CP	CQ	CR	CS
1	Investment	sl r"Total" cD		20.6132	0.8280	898.8292	11.7954	2.9488	0.0000
2									
3	***Investment Based Costs***	***sl r"Total" cK***		0.3418	0.0137	14.9019	0.1956	0.0489	0.0000
4									
5	Direct Expenses			0.0000	0.0000	0.0000	0.0000	0.0000	0.0000
6	Miscellaneous Expenses			0.0000	0.0000	0.0000	0.0000	0.0000	0.0000
7	Billing & Collection - PL			0.0000	0.0000	0.0000	0.0000	0.0000	0.0000
8	***Investment Based + Direct Costs***			0.3418	0.0137	14.9019	0.1956	0.0489	0.0000
9									
10	***Directly Assigned***								
11	Product Management Expense	cA*(r8-r6)	0.025565	0.0087	0.0004	0.3810	0.0050	0.0012	0.0000
12	Sales Expense	cA*(r8-r6)	0.009225	0.0032	0.0001	0.1375	0.0018	0.0005	0.0000
13	Product Advertising Expense	cA*(r8-r6)	0.000000	0.0000	0.0000	0.0000	0.0000	0.0000	0.0000
14	Business Fees (Other Operating Taxes)	cA*(Sum(r8:r13)-r6)	0.002025	0.0007	0.0000	0.0312	0.0004	0.0001	0.0000
15	***Directly Assigned Costs***	***Sum r11:r14***		0.0126	0.0005	0.5497	0.0072	0.0018	0.0000
16									
17	***Total Direct Costs***	***r8 + r15***		0.3544	0.0142	15.4516	0.2028	0.0507	0.0000
18									
19	***Directly Attributed***								
20	Network Operations	cA*(r17-r6)	0.040880	0.0145	0.0006	0.6317	0.0083	0.0021	0.0000
21	Network Support Assets	cA*(r17-r6)	0.015364	0.0054	0.0002	0.2374	0.0031	0.0008	0.0000
22	General Support Assets	cA*(r17-r6)	0.069508	0.0246	0.0010	1.0740	0.0141	0.0035	0.0000
23	General Purpose Computers	cA*(r17-r6)	0.034714	0.0123	0.0005	0.5364	0.0070	0.0018	0.0000
24	Uncollectible	cA*(r17-r6)	0.000401	0.0001	0.0000	0.0062	0.0001	0.0000	0.0000
25	Accounting & Finance Expense	cA*(r17-r6)	0.008839	0.0031	0.0001	0.1366	0.0018	0.0004	0.0000
26	Human Resources Expense	cA*(r17-r6)	0.008145	0.0029	0.0001	0.1259	0.0017	0.0004	0.0000
27	Information Management Expense	cA*(r17-r6)	0.057009	0.0202	0.0008	0.8809	0.0116	0.0029	0.0000
28	Intangibles	cA*(r17-r6)	0.002091	0.0007	0.0000	0.0323	0.0004	0.0001	0.0000
29	***Directly Attributed Costs***	***Sum r20:r28***		0.0840	0.0034	3.6613	0.0480	0.0120	0.0000
30									
31	***TELRIC***	***r17 + r29***		0.4383	0.0176	19.1128	0.2508	0.0627	0.0000
32									
33	***Common***								
34	Executive Expense	cA*(r31-r6)	0.007805	0.0034	0.0001	0.1492	0.0020	0.0005	0.0000
35	Planning Expense	cA*(r31-r6)	0.000580	0.0003	0.0000	0.0111	0.0001	0.0000	0.0000
36	External Relations Expense	cA*(r31-r6)	0.013029	0.0057	0.0002	0.2490	0.0033	0.0008	0.0000
37	Legal Expense	cA*(r31-r6)	0.006148	0.0027	0.0001	0.1175	0.0015	0.0004	0.0000
38	Other Procurement Expense	cA*(r31-r6)	0.002359	0.0010	0.0000	0.0451	0.0006	0.0001	0.0000
39	Research & Development Expense	cA*(r31-r6)	0.000036	0.0000	0.0000	0.0007	0.0000	0.0000	0.0000
40	Other General and Admin Expense	cA*(r31-r6)	0.015212	0.0067	0.0003	0.2907	0.0038	0.0010	0.0000
41	***Common Costs***	***Sum r34:r40***		0.0198	0.0008	0.8633	0.0113	0.0028	0.0000
42									
43	***TELRIC + Common Costs***	***r31 + r41***		0.4581	0.0184	19.9761	0.2621	0.0655	0.0000

Row	7/12/01 11:14 AM South Dakota	Source or Calculation	Factor Value	Message Waiting Indication Audible/Visual	Message Waiting Visual	Music On Hold - per system	Network Speed Call	Night Service Arrangement	Outgoing Calls Barred
			A	CT	CU	CV	CW	CX	CY
1	Investment	sl r"Total" cD		2.2079	2.2079	936.4626	0.0126	0.0649	0.0220
2									
3	***Investment Based Costs***	***sl r"Total" cK***		0.0366	0.0366	15.5258	0.0002	0.0011	0.0004
4									
5	Direct Expenses			0.0000	0.0000	0.0000	0.0000	0.0000	0.0000
6	Miscellaneous Expenses			0.0000	0.0000	0.0000	0.0000	0.0000	0.0000
7	Billing & Collection - PL			0.0000	0.0000	0.0000	0.0000	0.0000	0.0000
8	***Investment Based + Direct Costs***			0.0366	0.0366	15.5258	0.0002	0.0011	0.0004
9									
10	***Directly Assigned***								
11	Product Management Expense	cA*(r8-r6)	0.025565	0.0009	0.0009	0.3969	0.0000	0.0000	0.0000
12	Sales Expense	cA*(r8-r6)	0.009225	0.0003	0.0003	0.1432	0.0000	0.0000	0.0000
13	Product Advertising Expense	cA*(r8-r6)	0.000000	0.0000	0.0000	0.0000	0.0000	0.0000	0.0000
14	Business Fees (Other Operating Taxes)	cA*(Sum(r8:r13)-r6)	0.002025	0.0001	0.0001	0.0325	0.0000	0.0000	0.0000
15	***Directly Assigned Costs***	***Sum r11:r14***		0.0014	0.0014	0.5727	0.0000	0.0000	0.0000
16									
17	***Total Direct Costs***	***r8 + r15***		0.0380	0.0380	16.0985	0.0002	0.0011	0.0004
18									
19	***Directly Attributed***								
20	Network Operations	cA*(r17-r6)	0.040880	0.0016	0.0016	0.6581	0.0000	0.0000	0.0000
21	Network Support Assets	cA*(r17-r6)	0.015364	0.0006	0.0006	0.2473	0.0000	0.0000	0.0000
22	General Support Assets	cA*(r17-r6)	0.069508	0.0026	0.0026	1.1190	0.0000	0.0001	0.0000
23	General Purpose Computers	cA*(r17-r6)	0.034714	0.0013	0.0013	0.5588	0.0000	0.0000	0.0000
24	Uncollectible	cA*(r17-r6)	0.000401	0.0000	0.0000	0.0065	0.0000	0.0000	0.0000
25	Accounting & Finance Expense	cA*(r17-r6)	0.008839	0.0003	0.0003	0.1423	0.0000	0.0000	0.0000
26	Human Resources Expense	cA*(r17-r6)	0.008145	0.0003	0.0003	0.1311	0.0000	0.0000	0.0000
27	Information Management Expense	cA*(r17-r6)	0.057009	0.0022	0.0022	0.9178	0.0000	0.0001	0.0000
28	Intangibles	cA*(r17-r6)	0.002091	0.0001	0.0001	0.0337	0.0000	0.0000	0.0000
29	***Directly Attributed Costs***	***Sum r20:r28***		0.0090	0.0090	3.8146	0.0001	0.0003	0.0001
30									
31	***TELRIC***	***r17 + r29***		0.0470	0.0470	19.9131	0.0003	0.0014	0.0005
32									
33	***Common***								
34	Executive Expense	cA*(r31-r6)	0.007805	0.0004	0.0004	0.1554	0.0000	0.0000	0.0000
35	Planning Expense	cA*(r31-r6)	0.000580	0.0000	0.0000	0.0115	0.0000	0.0000	0.0000
36	External Relations Expense	cA*(r31-r6)	0.013029	0.0006	0.0006	0.2594	0.0000	0.0000	0.0000
37	Legal Expense	cA*(r31-r6)	0.006148	0.0003	0.0003	0.1224	0.0000	0.0000	0.0000
38	Other Procurement Expense	cA*(r31-r6)	0.002359	0.0001	0.0001	0.0470	0.0000	0.0000	0.0000
39	Research & Development Expense	cA*(r31-r6)	0.000036	0.0000	0.0000	0.0007	0.0000	0.0000	0.0000
40	Other General and Admin Expense	cA*(r31-r6)	0.015212	0.0007	0.0007	0.3029	0.0000	0.0000	0.0000
41	***Common Costs***	***Sum r34:r40***		0.0021	0.0021	0.8995	0.0000	0.0001	0.0000
42									
43	***TELRIC + Common Costs***	***r31 + r41***		0.0491	0.0491	20.8125	0.0003	0.0014	0.0005

Row	7/12/01 11:14 AM South Dakota	Source or Calculation	Factor Value	Outgoing Trunk Queuing	Privacy Release	Query Time	Speed Calling 1 Digit Controller	Speed Calling 1 Digit User	Speed Calling 1# List Individual
			A	CZ	DA	DB	DC	DD	DE
1	**Investment**	sl r"Total" cD		2.2812	0.1295	7.1043	0.3720	0.3720	0.3720
2									
3	***Investment Based Costs***	***sl r"Total" cK***		0.0378	0.0021	0.1178	0.0062	0.0062	0.0062
4									
5	Direct Expenses			0.0000	0.0000	0.0000	0.0000	0.0000	0.0000
6	Miscellaneous Expenses			0.0000	0.0000	0.0000	0.0000	0.0000	0.0000
7	Billing & Collection - PL			0.0000	0.0000	0.0000	0.0000	0.0000	0.0000
8	***Investment Based + Direct Costs***			0.0378	0.0021	0.1178	0.0062	0.0062	0.0062
9									
10	***Directly Assigned***								
11	Product Management Expense	cA*(r8-r6)	0.025565	0.0010	0.0001	0.0030	0.0002	0.0002	0.0002
12	Sales Expense	cA*(r8-r6)	0.009225	0.0003	0.0000	0.0011	0.0001	0.0001	0.0001
13	Product Advertising Expense	cA*(r8-r6)	0.000000	0.0000	0.0000	0.0000	0.0000	0.0000	0.0000
14	Business Fees (Other Operating Taxes)	cA*(Sum(r8:r13)-r6)	0.002025	0.0001	0.0000	0.0002	0.0000	0.0000	0.0000
15	***Directly Assigned Costs***	***Sum r11:r14***		0.0014	0.0001	0.0043	0.0002	0.0002	0.0002
16									
17	***Total Direct Costs***	***r8 + r15***		0.0392	0.0022	0.1221	0.0064	0.0064	0.0064
18									
19	***Directly Attributed***								
20	Network Operations	cA*(r17-r6)	0.040880	0.0016	0.0001	0.0050	0.0003	0.0003	0.0003
21	Network Support Assets	cA*(r17-r6)	0.015364	0.0006	0.0000	0.0019	0.0001	0.0001	0.0001
22	General Support Assets	cA*(r17-r6)	0.069508	0.0027	0.0002	0.0085	0.0004	0.0004	0.0004
23	General Purpose Computers	cA*(r17-r6)	0.034714	0.0014	0.0001	0.0042	0.0002	0.0002	0.0002
24	Uncollectible	cA*(r17-r6)	0.000401	0.0000	0.0000	0.0000	0.0000	0.0000	0.0000
25	Accounting & Finance Expense	cA*(r17-r6)	0.008839	0.0003	0.0000	0.0011	0.0001	0.0001	0.0001
26	Human Resources Expense	cA*(r17-r6)	0.008145	0.0003	0.0000	0.0010	0.0001	0.0001	0.0001
27	Information Management Expense	cA*(r17-r6)	0.057009	0.0022	0.0001	0.0070	0.0004	0.0004	0.0004
28	Intangibles	cA*(r17-r6)	0.002091	0.0001	0.0000	0.0003	0.0000	0.0000	0.0000
29	***Directly Attributed Costs***	***Sum r20:r28***		0.0093	0.0005	0.0289	0.0015	0.0015	0.0015
30									
31	***TELRIC***	***r17 + r29***		0.0485	0.0028	0.1511	0.0079	0.0079	0.0079
32									
33	***Common***								
34	Executive Expense	cA*(r31-r6)	0.007805	0.0004	0.0000	0.0012	0.0001	0.0001	0.0001
35	Planning Expense	cA*(r31-r6)	0.000580	0.0000	0.0000	0.0001	0.0000	0.0000	0.0000
36	External Relations Expense	cA*(r31-r6)	0.013029	0.0006	0.0000	0.0020	0.0001	0.0001	0.0001
37	Legal Expense	cA*(r31-r6)	0.006148	0.0003	0.0000	0.0009	0.0000	0.0000	0.0000
38	Other Procurement Expense	cA*(r31-r6)	0.002359	0.0001	0.0000	0.0004	0.0000	0.0000	0.0000
39	Research & Development Expense	cA*(r31-r6)	0.000036	0.0000	0.0000	0.0000	0.0000	0.0000	0.0000
40	Other General and Admin Expense	cA*(r31-r6)	0.015212	0.0007	0.0000	0.0023	0.0001	0.0001	0.0001
41	***Common Costs***	***Sum r34:r40***		0.0022	0.0001	0.0068	0.0004	0.0004	0.0004
42									
43	***TELRIC + Common Costs***	***r31 + r41***		0.0507	0.0029	0.1579	0.0083	0.0083	0.0083

Row	7/12/01 11:14 AM South Dakota	Source or Calculation	Factor Value	Speed Calling 2 Digit Controller	Speed Calling 2 Digit User	Speed Calling 2# List Individual	Speed Calling 30 Number	Speed Calling 8 Number	Station Camp-On Service - per main station
			A	DF	DG	DH	DI	DJ	DK
1	**Investment**	sl r"Total" cD		0.3720	0.3720	0.3720	0.3720	0.3720	346.3396
2									
3	***Investment Based Costs***	***sl r"Total" cK***		0.0062	0.0062	0.0062	0.0062	0.0062	5.7420
4									
5	Direct Expenses			0.0000	0.0000	0.0000	0.0000	0.0000	0.0000
6	Miscellaneous Expenses			0.0000	0.0000	0.0000	0.0000	0.0000	0.0000
7	Billing & Collection - PL			0.0000	0.0000	0.0000	0.0000	0.0000	0.0000
8	***Investment Based + Direct Costs***			0.0062	0.0062	0.0062	0.0062	0.0062	5.7420
9									
10	***Directly Assigned***								
11	Product Management Expense	cA*(r8-r6)	0.025565	0.0002	0.0002	0.0002	0.0002	0.0002	0.1468
12	Sales Expense	cA*(r8-r6)	0.009225	0.0001	0.0001	0.0001	0.0001	0.0001	0.0530
13	Product Advertising Expense	cA*(r8-r6)	0.000000	0.0000	0.0000	0.0000	0.0000	0.0000	0.0000
14	Business Fees (Other Operating Taxes)	cA*(Sum(r8:r13)-r6)	0.002025	0.0000	0.0000	0.0000	0.0000	0.0000	0.0120
15	***Directly Assigned Costs***	***Sum r11:r14***		0.0002	0.0002	0.0002	0.0002	0.0002	0.2118
16									
17	***Total Direct Costs***	***r8 + r15***		0.0064	0.0064	0.0064	0.0064	0.0064	5.9538
18									
19	***Directly Attributed***								
20	Network Operations	cA*(r17-r6)	0.040880	0.0003	0.0003	0.0003	0.0003	0.0003	0.2434
21	Network Support Assets	cA*(r17-r6)	0.015364	0.0001	0.0001	0.0001	0.0001	0.0001	0.0915
22	General Support Assets	cA*(r17-r6)	0.069508	0.0004	0.0004	0.0004	0.0004	0.0004	0.4138
23	General Purpose Computers	cA*(r17-r6)	0.034714	0.0002	0.0002	0.0002	0.0002	0.0002	0.2067
24	Uncollectible	cA*(r17-r6)	0.000401	0.0000	0.0000	0.0000	0.0000	0.0000	0.0024
25	Accounting & Finance Expense	cA*(r17-r6)	0.008839	0.0001	0.0001	0.0001	0.0001	0.0001	0.0526
26	Human Resources Expense	cA*(r17-r6)	0.008145	0.0001	0.0001	0.0001	0.0001	0.0001	0.0485
27	Information Management Expense	cA*(r17-r6)	0.057009	0.0004	0.0004	0.0004	0.0004	0.0004	0.3394
28	Intangibles	cA*(r17-r6)	0.002091	0.0000	0.0000	0.0000	0.0000	0.0000	0.0124
29	***Directly Attributed Costs***	***Sum r20:r28***		0.0015	0.0015	0.0015	0.0015	0.0015	1.4108
30									
31	***TELRIC***	***r17 + r29***		0.0079	0.0079	0.0079	0.0079	0.0079	7.3646
32									
33	***Common***								
34	Executive Expense	cA*(r31-r6)	0.007805	0.0001	0.0001	0.0001	0.0001	0.0001	0.0575
35	Planning Expense	cA*(r31-r6)	0.000580	0.0000	0.0000	0.0000	0.0000	0.0000	0.0043
36	External Relations Expense	cA*(r31-r6)	0.013029	0.0001	0.0001	0.0001	0.0001	0.0001	0.0960
37	Legal Expense	cA*(r31-r6)	0.006148	0.0000	0.0000	0.0000	0.0000	0.0000	0.0453
38	Other Procurement Expense	cA*(r31-r6)	0.002359	0.0000	0.0000	0.0000	0.0000	0.0000	0.0174
39	Research & Development Expense	cA*(r31-r6)	0.000036	0.0000	0.0000	0.0000	0.0000	0.0000	0.0003
40	Other General and Admin Expense	cA*(r31-r6)	0.015212	0.0001	0.0001	0.0001	0.0001	0.0001	0.1120
41	***Common Costs***	***Sum r34:r40***		0.0004	0.0004	0.0004	0.0004	0.0004	0.3327
42									
43	***TELRIC + Common Costs***	***r31 + r41***		0.0083	0.0083	0.0083	0.0083	0.0083	7.6973

Row	7/12/01 11:14 AM South Dakota	Source or Calculation	Factor Value	Station Dial Conferencing (6 Way)	Station Message Detail Recording (SMDR)	Three Way Calling	Time and Date Display	Time of Day Control for ARS - per system	Time of Day NCOS Update
			A	DL	DM	DN	DO	DP	DQ
1	Investment	sl r"Total" cD		67.0389	1.4371	10.5492	4.3995	0.0000	0.2302
2									
3	***Investment Based Costs***	***sl r"Total" cK***		1.1115	0.0251	0.1749	0.0729	0.0000	0.0038
4									
5	Direct Expenses			0.0000	0.0524	0.0000	0.0000	0.0000	0.0000
6	Miscellaneous Expenses			0.0000	0.0000	0.0000	0.0000	0.0000	0.0000
7	Billing & Collection - PL			0.0000	0.0000	0.0000	0.0000	0.0000	0.0000
8	***Investment Based + Direct Costs***			1.1115	0.0775	0.1749	0.0729	0.0000	0.0038
9									
10	***Directly Assigned***								
11	Product Management Expense	cA*(r8-r6)	0.025565	0.0284	0.0020	0.0045	0.0019	0.0000	0.0001
12	Sales Expense	cA*(r8-r6)	0.009225	0.0103	0.0007	0.0016	0.0007	0.0000	0.0000
13	Product Advertising Expense	cA*(r8-r6)	0.000000	0.0000	0.0000	0.0000	0.0000	0.0000	0.0000
14	Business Fees (Other Operating Taxes)	cA*(Sum(r8:r13)-r6)	0.002025	0.0023	0.0002	0.0004	0.0002	0.0000	0.0000
15	***Directly Assigned Costs***	***Sum r11:r14***		0.0410	0.0029	0.0065	0.0027	0.0000	0.0001
16									
17	***Total Direct Costs***	***r8 + r15***		1.1525	0.0804	0.1813	0.0756	0.0000	0.0040
18									
19	***Directly Attributed***								
20	Network Operations	cA*(r17-r6)	0.040880	0.0471	0.0033	0.0074	0.0031	0.0000	0.0002
21	Network Support Assets	cA*(r17-r6)	0.015364	0.0177	0.0012	0.0028	0.0012	0.0000	0.0001
22	General Support Assets	cA*(r17-r6)	0.069508	0.0801	0.0056	0.0126	0.0053	0.0000	0.0003
23	General Purpose Computers	cA*(r17-r6)	0.034714	0.0400	0.0028	0.0063	0.0026	0.0000	0.0001
24	Uncollectible	cA*(r17-r6)	0.000401	0.0005	0.0000	0.0001	0.0000	0.0000	0.0000
25	Accounting & Finance Expense	cA*(r17-r6)	0.008839	0.0102	0.0007	0.0016	0.0007	0.0000	0.0000
26	Human Resources Expense	cA*(r17-r6)	0.008145	0.0094	0.0007	0.0015	0.0006	0.0000	0.0000
27	Information Management Expense	cA*(r17-r6)	0.057009	0.0657	0.0046	0.0103	0.0043	0.0000	0.0002
28	Intangibles	cA*(r17-r6)	0.002091	0.0024	0.0002	0.0004	0.0002	0.0000	0.0000
29	***Directly Attributed Costs***	***Sum r20:r28***		0.2731	0.0190	0.0430	0.0179	0.0000	0.0009
30									
31	***TELRIC***	***r17 + r29***		1.4255	0.0994	0.2243	0.0936	0.0000	0.0049
32									
33	***Common***								
34	Executive Expense	cA*(r31-r6)	0.007805	0.0111	0.0008	0.0018	0.0007	0.0000	0.0000
35	Planning Expense	cA*(r31-r6)	0.000580	0.0008	0.0001	0.0001	0.0001	0.0000	0.0000
36	External Relations Expense	cA*(r31-r6)	0.013029	0.0186	0.0013	0.0029	0.0012	0.0000	0.0001
37	Legal Expense	cA*(r31-r6)	0.006148	0.0088	0.0006	0.0014	0.0006	0.0000	0.0000
38	Other Procurement Expense	cA*(r31-r6)	0.002359	0.0034	0.0002	0.0005	0.0002	0.0000	0.0000
39	Research & Development Expense	cA*(r31-r6)	0.000036	0.0001	0.0000	0.0000	0.0000	0.0000	0.0000
40	Other General and Admin Expense	cA*(r31-r6)	0.015212	0.0217	0.0015	0.0034	0.0014	0.0000	0.0001
41	***Common Costs***	***Sum r34:r40***		0.0644	0.0045	0.0101	0.0042	0.0000	0.0002
42									
43	***TELRIC + Common Costs***	***r31 + r41***		1.4899	0.1039	0.2345	0.0978	0.0000	0.0051

Row	7/12/01 11:14 AM South Dakota	Source or Calculation	Factor Value	Time of Day Routing - per line	Toll Restriction Service	Trunk Answer Any Station	Trunk Verification from Designated Station	UCD in hunt group - per line	UCD with Music After Delay
			A	DR	DS	DT	DU	DV	DW
1	Investment	sl r"Total" cD		2.4541	0.2093	0.0649	0.0000	334.9949	220.7583
2									
3	***Investment Based Costs***	***sl r"Total" cK***		0.0407	0.0035	0.0011	0.0000	5.5540	3.6600
4									
5	Direct Expenses			0.0000	0.0000	0.0000	0.0000	0.0000	0.0000
6	Miscellaneous Expenses			0.0000	0.0000	0.0000	0.0000	0.0000	0.0000
7	Billing & Collection - PL			0.0000	0.0000	0.0000	0.0000	0.0000	0.0000
8	***Investment Based + Direct Costs***			0.0407	0.0035	0.0011	0.0000	5.5540	3.6600
9									
10	***Directly Assigned***								
11	Product Management Expense	cA*(r8-r6)	0.025565	0.0010	0.0001	0.0000	0.0000	0.1420	0.0936
12	Sales Expense	cA*(r8-r6)	0.009225	0.0004	0.0000	0.0000	0.0000	0.0512	0.0338
13	Product Advertising Expense	cA*(r8-r6)	0.000000	0.0000	0.0000	0.0000	0.0000	0.0000	0.0000
14	Business Fees (Other Operating Taxes)	cA*(Sum(r8:r13)-r6)	0.002025	0.0001	0.0000	0.0000	0.0000	0.0116	0.0077
15	***Directly Assigned Costs***	***Sum r11:r14***		0.0015	0.0001	0.0000	0.0000	0.2049	0.1350
16									
17	***Total Direct Costs***	***r8 + r15***		0.0422	0.0036	0.0011	0.0000	5.7588	3.7950
18									
19	***Directly Attributed***								
20	Network Operations	cA*(r17-r6)	0.040880	0.0017	0.0001	0.0000	0.0000	0.2354	0.1551
21	Network Support Assets	cA*(r17-r6)	0.015364	0.0006	0.0001	0.0000	0.0000	0.0885	0.0583
22	General Support Assets	cA*(r17-r6)	0.069508	0.0029	0.0003	0.0001	0.0000	0.4003	0.2638
23	General Purpose Computers	cA*(r17-r6)	0.034714	0.0015	0.0001	0.0000	0.0000	0.1999	0.1317
24	Uncollectible	cA*(r17-r6)	0.000401	0.0000	0.0000	0.0000	0.0000	0.0023	0.0015
25	Accounting & Finance Expense	cA*(r17-r6)	0.008839	0.0004	0.0000	0.0000	0.0000	0.0509	0.0335
26	Human Resources Expense	cA*(r17-r6)	0.008145	0.0003	0.0000	0.0000	0.0000	0.0469	0.0309
27	Information Management Expense	cA*(r17-r6)	0.057009	0.0024	0.0002	0.0001	0.0000	0.3283	0.2163
28	Intangibles	cA*(r17-r6)	0.002091	0.0001	0.0000	0.0000	0.0000	0.0120	0.0079
29	***Directly Attributed Costs***	***Sum r20:r28***		0.0100	0.0009	0.0003	0.0000	1.3646	0.8992
30									
31	***TELRIC***	***r17 + r29***		0.0522	0.0045	0.0014	0.0000	7.1234	4.6942
32									
33	***Common***								
34	Executive Expense	cA*(r31-r6)	0.007805	0.0004	0.0000	0.0000	0.0000	0.0556	0.0366
35	Planning Expense	cA*(r31-r6)	0.000580	0.0000	0.0000	0.0000	0.0000	0.0041	0.0027
36	External Relations Expense	cA*(r31-r6)	0.013029	0.0007	0.0001	0.0000	0.0000	0.0928	0.0612
37	Legal Expense	cA*(r31-r6)	0.006148	0.0003	0.0000	0.0000	0.0000	0.0438	0.0289
38	Other Procurement Expense	cA*(r31-r6)	0.002359	0.0001	0.0000	0.0000	0.0000	0.0168	0.0111
39	Research & Development Expense	cA*(r31-r6)	0.000036	0.0000	0.0000	0.0000	0.0000	0.0003	0.0002
40	Other General and Admin Expense	cA*(r31-r6)	0.015212	0.0008	0.0001	0.0000	0.0000	0.1084	0.0714
41	***Common Costs***	***Sum r34:r40***		0.0024	0.0002	0.0001	0.0000	0.3218	0.2120
42									
43	***TELRIC + Common Costs***	***r31 + r41***		0.0545	0.0047	0.0014	0.0000	7.4451	4.9063

7/12/01
South Dakota

SGAT FEATURES

Acct	FRC	Account Name	Investment	Depreciation	Cost Of Money	Income Tax	Ad Valorem	Maintenance	Switch RTU	Total Capital Costs
10XXX Direct Dialed Blocking										
2212	377C	Digital Switch	0.0280	0.0003	0.0001	0.0000	0.0000	0.0000	0.0000	0.0005
2111	20C	Land	0.0000	0.0000	0.0000	0.0000	0.0000	0.0000		0.0000
2121	110C	Building	0.0015	0.0000	0.0000	0.0000	0.0000	0.0000		0.0000
		Total	**0.0296**	**0.0003**	**0.0001**	**0.0000**	**0.0000**	**0.0001**	**0.0000**	**0.0005**
Account Codes - per system										
2212	377C	Digital Switch	291.5164	2.6458	1.1040	0.4175	0.2092	0.5087	0.0000	4.8852
2111	20C	Land	0.4081	0.0000	0.0033	0.0012	0.0003	0.0008		0.0056
2121	110C	Building	15.6544	0.0337	0.0977	0.0369	0.0112	0.0292		0.2087
		Total	**307.5790**	**2.6794**	**1.2049**	**0.4557**	**0.2208**	**0.5386**	**0.0000**	**5.0994**
Attendant Access Line - per station line										
2212	377C	Digital Switch	0.2289	0.0021	0.0009	0.0003	0.0002	0.0004	0.0000	0.0038
2111	20C	Land	0.0003	0.0000	0.0000	0.0000	0.0000	0.0000		0.0000
2121	110C	Building	0.0123	0.0000	0.0001	0.0000	0.0000	0.0000		0.0002
		Total	**0.2415**	**0.0021**	**0.0009**	**0.0004**	**0.0002**	**0.0004**	**0.0000**	**0.0040**
Audible Message Waiting										
2212	377C	Digital Switch	2.0926	0.0190	0.0079	0.0030	0.0015	0.0037	0.0000	0.0351
2111	20C	Land	0.0029	0.0000	0.0000	0.0000	0.0000	0.0000		0.0000
2121	110C	Building	0.1124	0.0002	0.0007	0.0003	0.0001	0.0002		0.0015
		Total	**2.2079**	**0.0192**	**0.0086**	**0.0033**	**0.0016**	**0.0039**	**0.0000**	**0.0366**
Authorization Codes - per system										
2212	377C	Digital Switch	123.5512	1.1213	0.4679	0.1769	0.0887	0.2156	0.0000	2.0704
2111	20C	Land	0.1730	0.0000	0.0014	0.0005	0.0001	0.0003		0.0024
2121	110C	Building	6.6347	0.0143	0.0414	0.0157	0.0048	0.0124		0.0884
		Total	**130.3588**	**1.1356**	**0.5107**	**0.1931**	**0.0936**	**0.2283**	**0.0000**	**2.1612**
Auto Callback										
2212	377C	Digital Switch	0.2752	0.0025	0.0010	0.0004	0.0002	0.0005	0.0000	0.0046
2111	20C	Land	0.0004	0.0000	0.0000	0.0000	0.0000	0.0000		0.0000

7/12/01
South Dakota

SGAT FEATURES

Acct	FRC	Account Name	Investment	Depreciation	Cost Of Money	Income Tax	Ad Valorem	Maintenance	Switch RTU	Total Capital Costs
2121	110C	Building	0.0148	0.0000	0.0001	0.0000	0.0000	0.0000		0.0002
		Total	**0.2903**	**0.0025**	**0.0011**	**0.0004**	**0.0002**	**0.0005**	**0.0000**	**0.0048**

Automatic Line

2212	377C	Digital Switch	0.0000	0.0000	0.0000	0.0000	0.0000	0.0000	0.0000	0.0000
		Total	**0.0000**	**0.0000**	**0.0000**	**0.0000**	**0.0000**	**0.0000**	**0.0000**	**0.0000**

Automatic Route Selection - Common Equip. per system

2212	377C	Digital Switch	82.6717	0.7503	0.3131	0.1184	0.0593	0.1443	0.0000	1.3854
2111	20C	Land	0.1157	0.0000	0.0009	0.0004	0.0001	0.0002		0.0016
2121	110C	Building	4.4395	0.0096	0.0277	0.0105	0.0032	0.0083		0.0592
		Total	**87.2269**	**0.7599**	**0.3417**	**0.1292**	**0.0626**	**0.1527**	**0.0000**	**1.4462**

Blocking of pay per call services

2212	377C	Digital Switch	1.1174	0.0101	0.0042	0.0016	0.0008	0.0019	0.0000	0.0187
2111	20C	Land	0.0016	0.0000	0.0000	0.0000	0.0000	0.0000		0.0000
2121	110C	Building	0.0600	0.0001	0.0004	0.0001	0.0000	0.0001		0.0008
		Total	**1.1789**	**0.0103**	**0.0046**	**0.0017**	**0.0008**	**0.0021**	**0.0000**	**0.0195**

Bridging

2212	377C	Digital Switch	0.0158	0.0001	0.0001	0.0000	0.0000	0.0000	0.0000	0.0003
2111	20C	Land	0.0000	0.0000	0.0000	0.0000	0.0000	0.0000		0.0000
2121	110C	Building	0.0008	0.0000	0.0000	0.0000	0.0000	0.0000		0.0000
		Total	**0.0166**	**0.0001**	**0.0001**	**0.0000**	**0.0000**	**0.0000**	**0.0000**	**0.0003**

Call Drop

2212	377C	Digital Switch	0.0034	0.0000	0.0000	0.0000	0.0000	0.0000	0.0000	0.0001
2111	20C	Land	0.0000	0.0000	0.0000	0.0000	0.0000	0.0000		0.0000
2121	110C	Building	0.0002	0.0000	0.0000	0.0000	0.0000	0.0000		0.0000
		Total	**0.0036**	**0.0000**	**0.0000**	**0.0000**	**0.0000**	**0.0000**	**0.0000**	**0.0001**

Call Exclusion - Automatic

2212	377C	Digital Switch	0.0001	0.0000	0.0000	0.0000	0.0000	0.0000	0.0000	0.0000
2111	20C	Land	0.0000	0.0000	0.0000	0.0000	0.0000	0.0000		0.0000

7/12/01
South Dakota

SGAT FEATURES

Acct	FRC	Account Name	Investment	Depreciation	Cost Of Money	Income Tax	Ad Valorem	Maintenance	Switch RTU	Total Capital Costs
2121	110C	Building	0.0000	0.0000	0.0000	0.0000	0.0000	0.0000		0.0000
		Total	**0.0001**	**0.0000**	**0.0000**	**0.0000**	**0.0000**	**0.0000**	**0.0000**	**0.0000**

Call Exclusion - Manual

2212	377C	Digital Switch	0.0001	0.0000	0.0000	0.0000	0.0000	0.0000	0.0000	0.0000
2111	20C	Land	0.0000	0.0000	0.0000	0.0000	0.0000	0.0000		0.0000
2121	110C	Building	0.0000	0.0000	0.0000	0.0000	0.0000	0.0000		0.0000
		Total	**0.0001**	**0.0000**	**0.0000**	**0.0000**	**0.0000**	**0.0000**	**0.0000**	**0.0000**

Call Forward Don't Answer - All Calls

2212	377C	Digital Switch	2.2766	0.0207	0.0086	0.0033	0.0016	0.0040	0.0000	0.0382
2111	20C	Land	0.0032	0.0000	0.0000	0.0000	0.0000	0.0000		0.0000
2121	110C	Building	0.1223	0.0003	0.0008	0.0003	0.0001	0.0002		0.0016
		Total	**2.4021**	**0.0209**	**0.0094**	**0.0036**	**0.0017**	**0.0042**	**0.0000**	**0.0398**

Call Forwarding Incoming Only

2212	377C	Digital Switch	0.2375	0.0022	0.0009	0.0003	0.0002	0.0004	0.0000	0.0040
2111	20C	Land	0.0003	0.0000	0.0000	0.0000	0.0000	0.0000		0.0000
2121	110C	Building	0.0128	0.0000	0.0001	0.0000	0.0000	0.0000		0.0002
		Total	**0.2506**	**0.0022**	**0.0010**	**0.0004**	**0.0002**	**0.0004**	**0.0000**	**0.0042**

Call Forwarding Intra Group Only

2212	377C	Digital Switch	0.2012	0.0018	0.0008	0.0003	0.0001	0.0004	0.0000	0.0034
2111	20C	Land	0.0003	0.0000	0.0000	0.0000	0.0000	0.0000		0.0000
2121	110C	Building	0.0108	0.0000	0.0001	0.0000	0.0000	0.0000		0.0001
		Total	**0.2123**	**0.0018**	**0.0008**	**0.0003**	**0.0002**	**0.0004**	**0.0000**	**0.0035**

Call Forwarding Variable Remote

2212	377C	Digital Switch	1.4746	0.0134	0.0056	0.0021	0.0011	0.0026	0.0000	0.0247
2111	20C	Land	0.0021	0.0000	0.0000	0.0000	0.0000	0.0000		0.0000
2121	110C	Building	0.0792	0.0002	0.0005	0.0002	0.0001	0.0001		0.0011
		Total	**1.5558**	**0.0136**	**0.0061**	**0.0023**	**0.0011**	**0.0027**	**0.0000**	**0.0258**

Call Forwarding: Busy Line (Expanded)

7/12/01
South Dakota

SGAT FEATURES

Acct	FRC	Account Name	Investment	Depreciation	Cost Of Money	Income Tax	Ad Valorem	Maintenance	Switch RTU	Total Capital Costs
2212	377C	Digital Switch	0.7412	0.0067	0.0028	0.0011	0.0005	0.0013	0.0000	0.0124
2111	20C	Land	0.0010	0.0000	0.0000	0.0000	0.0000	0.0000		0.0000
2121	110C	Building	0.0398	0.0001	0.0002	0.0001	0.0000	0.0001		0.0005
		Total	**0.7821**	**0.0068**	**0.0031**	**0.0012**	**0.0006**	**0.0014**	**0.0000**	**0.0130**

Call Forwarding: Busy Line (External)

2212	377C	Digital Switch	0.7412	0.0067	0.0028	0.0011	0.0005	0.0013	0.0000	0.0124
2111	20C	Land	0.0010	0.0000	0.0000	0.0000	0.0000	0.0000		0.0000
2121	110C	Building	0.0398	0.0001	0.0002	0.0001	0.0000	0.0001		0.0005
		Total	**0.7821**	**0.0068**	**0.0031**	**0.0012**	**0.0006**	**0.0014**	**0.0000**	**0.0130**

Call Forwarding: Busy Line (External) Don't Answer

2212	377C	Digital Switch	3.0179	0.0274	0.0114	0.0043	0.0022	0.0053	0.0000	0.0506
2111	20C	Land	0.0042	0.0000	0.0000	0.0000	0.0000	0.0000		0.0001
2121	110C	Building	0.1621	0.0003	0.0010	0.0004	0.0001	0.0003		0.0022
		Total	**3.1842**	**0.0277**	**0.0125**	**0.0047**	**0.0023**	**0.0056**	**0.0000**	**0.0528**

Call Forwarding: Busy Line (Overflow)

2212	377C	Digital Switch	0.7412	0.0067	0.0028	0.0011	0.0005	0.0013	0.0000	0.0124
2111	20C	Land	0.0010	0.0000	0.0000	0.0000	0.0000	0.0000		0.0000
2121	110C	Building	0.0398	0.0001	0.0002	0.0001	0.0000	0.0001		0.0005
		Total	**0.7821**	**0.0068**	**0.0031**	**0.0012**	**0.0006**	**0.0014**	**0.0000**	**0.0130**

Call Forwarding: Busy Line (Overflow) Don't Answer

2212	377C	Digital Switch	3.0179	0.0274	0.0114	0.0043	0.0022	0.0053	0.0000	0.0506
2111	20C	Land	0.0042	0.0000	0.0000	0.0000	0.0000	0.0000		0.0001
2121	110C	Building	0.1621	0.0003	0.0010	0.0004	0.0001	0.0003		0.0022
		Total	**3.1842**	**0.0277**	**0.0125**	**0.0047**	**0.0023**	**0.0056**	**0.0000**	**0.0528**

Call Forwarding: Busy Line (Programmable)

2212	377C	Digital Switch	0.9702	0.0088	0.0037	0.0014	0.0007	0.0017	0.0000	0.0163
2111	20C	Land	0.0014	0.0000	0.0000	0.0000	0.0000	0.0000		0.0000
2121	110C	Building	0.0521	0.0001	0.0003	0.0001	0.0000	0.0001		0.0007
		Total	**1.0237**	**0.0089**	**0.0040**	**0.0015**	**0.0007**	**0.0018**	**0.0000**	**0.0170**

7/12/01
South Dakota

SGAT FEATURES

Acct	FRC	Account Name	Investment	Depreciation	Cost Of Money	Income Tax	Ad Valorem	Maintenance	Switch RTU	Total Capital Costs
Call Forwarding: Busy Line/Don't Answer (Expanded)										
2212	377C	Digital Switch	3.0179	0.0274	0.0114	0.0043	0.0022	0.0053	0.0000	0.0506
2111	20C	Land	0.0042	0.0000	0.0000	0.0000	0.0000	0.0000		0.0001
2121	110C	Building	0.1621	0.0003	0.0010	0.0004	0.0001	0.0003		0.0022
		Total	**3.1842**	**0.0277**	**0.0125**	**0.0047**	**0.0023**	**0.0056**	**0.0000**	**0.0528**
Call Forwarding: Don't Answer										
2212	377C	Digital Switch	2.2766	0.0207	0.0086	0.0033	0.0016	0.0040	0.0000	0.0382
2111	20C	Land	0.0032	0.0000	0.0000	0.0000	0.0000	0.0000		0.0000
2121	110C	Building	0.1223	0.0003	0.0008	0.0003	0.0001	0.0002		0.0016
		Total	**2.4021**	**0.0209**	**0.0094**	**0.0036**	**0.0017**	**0.0042**	**0.0000**	**0.0398**
Call Forwarding: Don't Answer (Expanded)										
2212	377C	Digital Switch	2.2766	0.0207	0.0086	0.0033	0.0016	0.0040	0.0000	0.0382
2111	20C	Land	0.0032	0.0000	0.0000	0.0000	0.0000	0.0000		0.0000
2121	110C	Building	0.1223	0.0003	0.0008	0.0003	0.0001	0.0002		0.0016
		Total	**2.4021**	**0.0209**	**0.0094**	**0.0036**	**0.0017**	**0.0042**	**0.0000**	**0.0398**
Call Forwarding: Don't Answer (Programmable)										
2212	377C	Digital Switch	2.0516	0.0186	0.0078	0.0029	0.0015	0.0036	0.0000	0.0344
2111	20C	Land	0.0029	0.0000	0.0000	0.0000	0.0000	0.0000		0.0000
2121	110C	Building	0.1102	0.0002	0.0007	0.0003	0.0001	0.0002		0.0015
		Total	**2.1647**	**0.0189**	**0.0085**	**0.0032**	**0.0016**	**0.0038**	**0.0000**	**0.0359**
Call Forwarding: Variable										
2212	377C	Digital Switch	1.1059	0.0100	0.0042	0.0016	0.0008	0.0019	0.0000	0.0185
2111	20C	Land	0.0015	0.0000	0.0000	0.0000	0.0000	0.0000		0.0000
2121	110C	Building	0.0594	0.0001	0.0004	0.0001	0.0000	0.0001		0.0008
		Total	**1.1669**	**0.0102**	**0.0046**	**0.0017**	**0.0008**	**0.0020**	**0.0000**	**0.0193**
Call Forwarding: Variable - no call complete option										
2212	377C	Digital Switch	1.1059	0.0100	0.0042	0.0016	0.0008	0.0019	0.0000	0.0185
2111	20C	Land	0.0015	0.0000	0.0000	0.0000	0.0000	0.0000		0.0000

7/12/01
South Dakota

SGAT FEATURES

Acct	FRC	Account Name	Investment	Depreciation	Cost Of Money	Income Tax	Ad Valorem	Maintenance	Switch RTU	Total Capital Costs
2121	110C	Building	0.0594	0.0001	0.0004	0.0001	0.0000	0.0001		0.0008
		Total	**1.1669**	**0.0102**	**0.0046**	**0.0017**	**0.0008**	**0.0020**	**0.0000**	**0.0193**

Call Hold

2212	377C	Digital Switch	0.3011	0.0027	0.0011	0.0004	0.0002	0.0005	0.0000	0.0050
2111	20C	Land	0.0004	0.0000	0.0000	0.0000	0.0000	0.0000		0.0000
2121	110C	Building	0.0162	0.0000	0.0001	0.0000	0.0000	0.0000		0.0002
		Total	**0.3177**	**0.0028**	**0.0012**	**0.0005**	**0.0002**	**0.0006**	**0.0000**	**0.0053**

Call Hold/3-Way/Call Transfer

2212	377C	Digital Switch	9.9983	0.0907	0.0379	0.0143	0.0072	0.0174	0.0000	0.1675
2111	20C	Land	0.0140	0.0000	0.0001	0.0000	0.0000	0.0000		0.0002
2121	110C	Building	0.5369	0.0012	0.0033	0.0013	0.0004	0.0010		0.0072
		Total	**10.5492**	**0.0919**	**0.0413**	**0.0156**	**0.0076**	**0.0185**	**0.0000**	**0.1749**

Call Park (Basic - Store & Retrieve)

2212	377C	Digital Switch	0.6580	0.0060	0.0025	0.0009	0.0005	0.0011	0.0000	0.0110
2111	20C	Land	0.0009	0.0000	0.0000	0.0000	0.0000	0.0000		0.0000
2121	110C	Building	0.0353	0.0001	0.0002	0.0001	0.0000	0.0001		0.0005
		Total	**0.6943**	**0.0060**	**0.0027**	**0.0010**	**0.0005**	**0.0012**	**0.0000**	**0.0115**

Call Pickup

2212	377C	Digital Switch	0.2728	0.0025	0.0010	0.0004	0.0002	0.0005	0.0000	0.0046
2111	20C	Land	0.0004	0.0000	0.0000	0.0000	0.0000	0.0000		0.0000
2121	110C	Building	0.0147	0.0000	0.0001	0.0000	0.0000	0.0000		0.0002
		Total	**0.2879**	**0.0025**	**0.0011**	**0.0004**	**0.0002**	**0.0005**	**0.0000**	**0.0048**

Call Transfer

2212	377C	Digital Switch	9.9983	0.0907	0.0379	0.0143	0.0072	0.0174	0.0000	0.1675
2111	20C	Land	0.0140	0.0000	0.0001	0.0000	0.0000	0.0000		0.0002
2121	110C	Building	0.5369	0.0012	0.0033	0.0013	0.0004	0.0010		0.0072
		Total	**10.5492**	**0.0919**	**0.0413**	**0.0156**	**0.0076**	**0.0185**	**0.0000**	**0.1749**

Call Waiting Dial Originating

7/12/01
South Dakota

SGAT FEATURES

Acct	FRC	Account Name	Investment	Depreciation	Cost Of Money	Income Tax	Ad Valorem	Maintenance	Switch RTU	Total Capital Costs
2212	377C	Digital Switch	0.3830	0.0035	0.0015	0.0005	0.0003	0.0007	0.0000	0.0064
2111	20C	Land	0.0005	0.0000	0.0000	0.0000	0.0000	0.0000		0.0000
2121	110C	Building	0.0206	0.0000	0.0001	0.0000	0.0000	0.0000		0.0003
		Total	**0.4041**	**0.0035**	**0.0016**	**0.0006**	**0.0003**	**0.0007**	**0.0000**	**0.0067**

Call Waiting Indication - per timing state

2212	377C	Digital Switch	15.5340	0.1410	0.0588	0.0222	0.0111	0.0271	0.0000	0.2603
2111	20C	Land	0.0217	0.0000	0.0002	0.0001	0.0000	0.0000		0.0003
2121	110C	Building	0.8342	0.0018	0.0052	0.0020	0.0006	0.0016		0.0111
		Total	**16.3899**	**0.1428**	**0.0642**	**0.0243**	**0.0118**	**0.0287**	**0.0000**	**0.2717**

Call Waiting Originating

2212	377C	Digital Switch	0.7943	0.0072	0.0030	0.0011	0.0006	0.0014	0.0000	0.0133
2111	20C	Land	0.0011	0.0000	0.0000	0.0000	0.0000	0.0000		0.0000
2121	110C	Building	0.0427	0.0001	0.0003	0.0001	0.0000	0.0001		0.0006
		Total	**0.8381**	**0.0073**	**0.0033**	**0.0012**	**0.0006**	**0.0015**	**0.0000**	**0.0139**

Call Waiting Terminating - All Calls

2212	377C	Digital Switch	1.5928	0.0145	0.0060	0.0023	0.0011	0.0028	0.0000	0.0267
2111	20C	Land	0.0022	0.0000	0.0000	0.0000	0.0000	0.0000		0.0000
2121	110C	Building	0.0855	0.0002	0.0005	0.0002	0.0001	0.0002		0.0011
		Total	**1.6806**	**0.0146**	**0.0066**	**0.0025**	**0.0012**	**0.0029**	**0.0000**	**0.0279**

Call Waiting Terminating - Incoming Only

2212	377C	Digital Switch	1.5928	0.0145	0.0060	0.0023	0.0011	0.0028	0.0000	0.0267
2111	20C	Land	0.0022	0.0000	0.0000	0.0000	0.0000	0.0000		0.0000
2121	110C	Building	0.0855	0.0002	0.0005	0.0002	0.0001	0.0002		0.0011
		Total	**1.6806**	**0.0146**	**0.0066**	**0.0025**	**0.0012**	**0.0029**	**0.0000**	**0.0279**

Call Waiting/ Cancel Call Waiting

2212	377C	Digital Switch	2.5506	0.0231	0.0097	0.0037	0.0018	0.0045	0.0000	0.0427
2111	20C	Land	0.0036	0.0000	0.0000	0.0000	0.0000	0.0000		0.0000
2121	110C	Building	0.1370	0.0003	0.0009	0.0003	0.0001	0.0003		0.0018
		Total	**2.6912**	**0.0234**	**0.0105**	**0.0040**	**0.0019**	**0.0047**	**0.0000**	**0.0446**

Centrex Management System (CMS)

7/12/01
South Dakota

SGAT FEATURES

Acct	FRC	Account Name	Investment	Depreciation	Cost Of Money	Income Tax	Ad Valorem	Maintenance	Switch RTU	Total Capital Costs
2212	377C	Digital Switch	0.0223	0.0002	0.0001	0.0000	0.0000	0.0000	0.0000	0.0004
2124	2124	General Purpose Computers	1.1113	0.0153	0.0044	0.0017	0.0008	0.0000	0.0000	0.0221
2111	20C	Land	0.0000	0.0000	0.0000	0.0000	0.0000	0.0000		0.0000
2121	110C	Building	0.0012	0.0000	0.0000	0.0000	0.0000	0.0000		0.0000
		Total	**1.1349**	**0.0155**	**0.0045**	**0.0017**	**0.0008**	**0.0000**	**0.0000**	**0.0225**

Centrex Plus DID numbers per number

2212	377C	Digital Switch	1.5902	0.0144	0.0060	0.0023	0.0011	0.0028	0.0000	0.0266
2111	20C	Land	0.0022	0.0000	0.0000	0.0000	0.0000	0.0000		0.0000
2121	110C	Building	0.0854	0.0002	0.0005	0.0002	0.0001	0.0002		0.0011
		Total	**1.6778**	**0.0146**	**0.0066**	**0.0025**	**0.0012**	**0.0029**	**0.0000**	**0.0278**

Centrex Plus to Centrex Plus

2212	377C	Digital Switch	210.7252	1.9125	0.7980	0.3018	0.1512	0.3677	0.0000	3.5313
2111	20C	Land	0.2950	0.0000	0.0024	0.0009	0.0002	0.0005		0.0040
2121	110C	Building	11.3159	0.0243	0.0706	0.0267	0.0081	0.0211		0.1508
		Total	**222.3361**	**1.9369**	**0.8710**	**0.3294**	**0.1596**	**0.3893**	**0.0000**	**3.6862**

Centrex Plus to IC Carrier

2212	377C	Digital Switch	210.7252	1.9125	0.7980	0.3018	0.1512	0.3677	0.0000	3.5313
2111	20C	Land	0.2950	0.0000	0.0024	0.0009	0.0002	0.0005		0.0040
2121	110C	Building	11.3159	0.0243	0.0706	0.0267	0.0081	0.0211		0.1508
		Total	**222.3361**	**1.9369**	**0.8710**	**0.3294**	**0.1596**	**0.3893**	**0.0000**	**3.6862**

Centrex Plus to PBX/Key Blocked

2212	377C	Digital Switch	210.7252	1.9125	0.7980	0.3018	0.1512	0.3677	0.0000	3.5313
2111	20C	Land	0.2950	0.0000	0.0024	0.0009	0.0002	0.0005		0.0040
2121	110C	Building	11.3159	0.0243	0.0706	0.0267	0.0081	0.0211		0.1508
		Total	**222.3361**	**1.9369**	**0.8710**	**0.3294**	**0.1596**	**0.3893**	**0.0000**	**3.6862**

Centrex Plus to PBX/Key Non-Blocked

2212	377C	Digital Switch	210.7252	1.9125	0.7980	0.3018	0.1512	0.3677	0.0000	3.5313
2111	20C	Land	0.2950	0.0000	0.0024	0.0009	0.0002	0.0005		0.0040
2121	110C	Building	11.3159	0.0243	0.0706	0.0267	0.0081	0.0211		0.1508

7/12/01
South Dakota

SGAT FEATURES

Acct	FRC	Account Name	Investment	Depreciation	Cost Of Money	Income Tax	Ad Valorem	Maintenance	Switch RTU	Total Capital Costs
		Total	222.3361	1.9369	0.8710	0.3294	0.1596	0.3893	0.0000	3.6862
CFBL - All Calls										
2212	377C	Digital Switch	0.7412	0.0067	0.0028	0.0011	0.0005	0.0013	0.0000	0.0124
2111	20C	Land	0.0010	0.0000	0.0000	0.0000	0.0000	0.0000		0.0000
2121	110C	Building	0.0398	0.0001	0.0002	0.0001	0.0000	0.0001		0.0005
		Total	0.7821	0.0068	0.0031	0.0012	0.0006	0.0014	0.0000	0.0130
CFBL - Incoming Only										
2212	377C	Digital Switch	0.7412	0.0067	0.0028	0.0011	0.0005	0.0013	0.0000	0.0124
2111	20C	Land	0.0010	0.0000	0.0000	0.0000	0.0000	0.0000		0.0000
2121	110C	Building	0.0398	0.0001	0.0002	0.0001	0.0000	0.0001		0.0005
		Total	0.7821	0.0068	0.0031	0.0012	0.0006	0.0014	0.0000	0.0130
CFDA Incoming Only										
2212	377C	Digital Switch	0.3351	0.0030	0.0013	0.0005	0.0002	0.0006	0.0000	0.0056
2111	20C	Land	0.0005	0.0000	0.0000	0.0000	0.0000	0.0000		0.0000
2121	110C	Building	0.0180	0.0000	0.0001	0.0000	0.0000	0.0000		0.0002
		Total	0.3536	0.0031	0.0014	0.0005	0.0003	0.0006	0.0000	0.0059
CLASS - Anonymous Call Rejection										
2212	377C	Digital Switch	10.2158	0.0927	0.0387	0.0146	0.0073	0.0178	0.0000	0.1712
2111	20C	Land	0.0143	0.0000	0.0001	0.0000	0.0000	0.0000		0.0002
2121	110C	Building	0.5486	0.0012	0.0034	0.0013	0.0004	0.0010		0.0073
		Total	10.7787	0.0939	0.0422	0.0160	0.0077	0.0189	0.0000	0.1787
CLASS - Call Waiting ID										
2212	377C	Digital Switch	1.1874	0.0108	0.0045	0.0017	0.0009	0.0021	0.0000	0.0199
2111	20C	Land	0.0017	0.0000	0.0000	0.0000	0.0000	0.0000		0.0000
2121	110C	Building	0.0638	0.0001	0.0004	0.0002	0.0000	0.0001		0.0009
		Total	1.2528	0.0109	0.0049	0.0019	0.0009	0.0022	0.0000	0.0208
CLASS - Calling Name & Number										
2212	377C	Digital Switch	13.6549	0.1239	0.0517	0.0196	0.0098	0.0238	0.0000	0.2288

7/12/01
South Dakota

SGAT FEATURES

Acct	FRC	Account Name	Investment	Depreciation	Cost Of Money	Income Tax	Ad Valorem	Maintenance	Switch RTU	Total Capital Costs
2111	20C	Land	0.0191	0.0000	0.0002	0.0001	0.0000	0.0000		0.0003
2121	110C	Building	0.7333	0.0016	0.0046	0.0017	0.0005	0.0014		0.0098
		Total	**14.4073**	**0.1255**	**0.0564**	**0.0213**	**0.0103**	**0.0252**	**0.0000**	**0.2389**

CLASS - Calling Number Delivery

2212	377C	Digital Switch	1.1479	0.0104	0.0043	0.0016	0.0008	0.0020	0.0000	0.0192
2111	20C	Land	0.0016	0.0000	0.0000	0.0000	0.0000	0.0000		0.0000
2121	110C	Building	0.0616	0.0001	0.0004	0.0001	0.0000	0.0001		0.0008
		Total	**1.2112**	**0.0106**	**0.0047**	**0.0018**	**0.0009**	**0.0021**	**0.0000**	**0.0201**

CLASS - Calling Number Delivery - Blocking

2212	377C	Digital Switch	10.7214	0.0973	0.0406	0.0154	0.0077	0.0187	0.0000	0.1797
2111	20C	Land	0.0150	0.0000	0.0001	0.0000	0.0000	0.0000		0.0002
2121	110C	Building	0.5757	0.0012	0.0036	0.0014	0.0004	0.0011		0.0077
		Total	**11.3122**	**0.0985**	**0.0443**	**0.0168**	**0.0081**	**0.0198**	**0.0000**	**0.1875**

CLASS - Continuous Redial

2212	377C	Digital Switch	8.1996	0.0744	0.0311	0.0117	0.0059	0.0143	0.0000	0.1374
2111	20C	Land	0.0115	0.0000	0.0001	0.0000	0.0000	0.0000		0.0002
2121	110C	Building	0.4403	0.0009	0.0027	0.0010	0.0003	0.0008		0.0059
		Total	**8.6514**	**0.0754**	**0.0339**	**0.0128**	**0.0062**	**0.0151**	**0.0000**	**0.1434**

CLASS - Last Call Return

2212	377C	Digital Switch	2.3009	0.0209	0.0087	0.0033	0.0017	0.0040	0.0000	0.0386
2111	20C	Land	0.0032	0.0000	0.0000	0.0000	0.0000	0.0000		0.0000
2121	110C	Building	0.1236	0.0003	0.0008	0.0003	0.0001	0.0002		0.0016
		Total	**2.4277**	**0.0211**	**0.0095**	**0.0036**	**0.0017**	**0.0043**	**0.0000**	**0.0402**

CLASS - Priority Calling

2212	377C	Digital Switch	4.6604	0.0423	0.0176	0.0067	0.0033	0.0081	0.0000	0.0781
2111	20C	Land	0.0065	0.0000	0.0001	0.0000	0.0000	0.0000		0.0001
2121	110C	Building	0.2503	0.0005	0.0016	0.0006	0.0002	0.0005		0.0033
		Total	**4.9172**	**0.0428**	**0.0193**	**0.0073**	**0.0035**	**0.0086**	**0.0000**	**0.0815**

CLASS - Selective Call Forwarding

7/12/01
South Dakota

SGAT FEATURES

Acct	FRC	Account Name	Investment	Depreciation	Cost Of Money	Income Tax	Ad Valorem	Maintenance	Switch RTU	Total Capital Costs
2212	377C	Digital Switch	4.1686	0.0378	0.0158	0.0060	0.0030	0.0073	0.0000	0.0699
2111	20C	Land	0.0058	0.0000	0.0000	0.0000	0.0000	0.0000		0.0001
2121	110C	Building	0.2239	0.0005	0.0014	0.0005	0.0002	0.0004		0.0030
		Total	**4.3983**	**0.0383**	**0.0172**	**0.0065**	**0.0032**	**0.0077**	**0.0000**	**0.0729**

CLASS - Selective Call Rejection

2212	377C	Digital Switch	9.5497	0.0867	0.0362	0.0137	0.0069	0.0167	0.0000	0.1600
2111	20C	Land	0.0134	0.0000	0.0001	0.0000	0.0000	0.0000		0.0002
2121	110C	Building	0.5128	0.0011	0.0032	0.0012	0.0004	0.0010		0.0068
		Total	**10.0759**	**0.0878**	**0.0395**	**0.0149**	**0.0072**	**0.0176**	**0.0000**	**0.1670**

Conference Calling - Meet Me

2212	377C	Digital Switch	565.0206	5.1280	2.1398	0.8092	0.4055	0.9859	0.0000	9.4685
2111	20C	Land	0.7910	0.0000	0.0064	0.0024	0.0006	0.0015		0.0108
2121	110C	Building	30.3416	0.0653	0.1893	0.0716	0.0218	0.0565		0.4045
		Total	**596.1532**	**5.1933**	**2.3354**	**0.8832**	**0.4279**	**1.0439**	**0.0000**	**9.8838**

Conference Calling - Preset

2212	377C	Digital Switch	412.7093	3.7457	1.5630	0.5911	0.2962	0.7201	0.0000	6.9161
2111	20C	Land	0.5778	0.0000	0.0046	0.0018	0.0004	0.0011		0.0079
2121	110C	Building	22.1625	0.0477	0.1383	0.0523	0.0159	0.0413		0.2954
		Total	**435.4496**	**3.7934**	**1.7059**	**0.6451**	**0.3125**	**0.7625**	**0.0000**	**7.2194**

Custom Ringing First Line (Short/Long/Short)

2212	377C	Digital Switch	0.5161	0.0047	0.0020	0.0007	0.0004	0.0009	0.0000	0.0086
2111	20C	Land	0.0007	0.0000	0.0000	0.0000	0.0000	0.0000		0.0000
2121	110C	Building	0.0277	0.0001	0.0002	0.0001	0.0000	0.0001		0.0004
		Total	**0.5446**	**0.0047**	**0.0021**	**0.0008**	**0.0004**	**0.0010**	**0.0000**	**0.0090**

Custom Ringing First Line (Short/Short)

2212	377C	Digital Switch	0.5161	0.0047	0.0020	0.0007	0.0004	0.0009	0.0000	0.0086
2111	20C	Land	0.0007	0.0000	0.0000	0.0000	0.0000	0.0000		0.0000
2121	110C	Building	0.0277	0.0001	0.0002	0.0001	0.0000	0.0001		0.0004
		Total	**0.5446**	**0.0047**	**0.0021**	**0.0008**	**0.0004**	**0.0010**	**0.0000**	**0.0090**

7/12/01
South Dakota

SGAT FEATURES

Acct	FRC	Account Name	Investment	Depreciation	Cost Of Money	Income Tax	Ad Valorem	Maintenance	Switch RTU	Total Capital Costs
Custom Ringing First Line (Short/Short/Long)										
2212	377C	Digital Switch	0.5161	0.0047	0.0020	0.0007	0.0004	0.0009	0.0000	0.0086
2111	20C	Land	0.0007	0.0000	0.0000	0.0000	0.0000	0.0000		0.0000
2121	110C	Building	0.0277	0.0001	0.0002	0.0001	0.0000	0.0001		0.0004
		Total	**0.5446**	**0.0047**	**0.0021**	**0.0008**	**0.0004**	**0.0010**	**0.0000**	**0.0090**
Custom Ringing Second Line (Short/Long/Short)										
2212	377C	Digital Switch	0.4841	0.0044	0.0018	0.0007	0.0003	0.0008	0.0000	0.0081
2111	20C	Land	0.0007	0.0000	0.0000	0.0000	0.0000	0.0000		0.0000
2121	110C	Building	0.0260	0.0001	0.0002	0.0001	0.0000	0.0000		0.0003
		Total	**0.5108**	**0.0044**	**0.0020**	**0.0008**	**0.0004**	**0.0009**	**0.0000**	**0.0085**
Custom Ringing Second Line (Short/Short)										
2212	377C	Digital Switch	0.4841	0.0044	0.0018	0.0007	0.0003	0.0008	0.0000	0.0081
2111	20C	Land	0.0007	0.0000	0.0000	0.0000	0.0000	0.0000		0.0000
2121	110C	Building	0.0260	0.0001	0.0002	0.0001	0.0000	0.0000		0.0003
		Total	**0.5108**	**0.0044**	**0.0020**	**0.0008**	**0.0004**	**0.0009**	**0.0000**	**0.0085**
Custom Ringing Second Line (Short/Short/Long)										
2212	377C	Digital Switch	0.4841	0.0044	0.0018	0.0007	0.0003	0.0008	0.0000	0.0081
2111	20C	Land	0.0007	0.0000	0.0000	0.0000	0.0000	0.0000		0.0000
2121	110C	Building	0.0260	0.0001	0.0002	0.0001	0.0000	0.0000		0.0003
		Total	**0.5108**	**0.0044**	**0.0020**	**0.0008**	**0.0004**	**0.0009**	**0.0000**	**0.0085**
Custom Ringing Third Line (Short/Long/Short)										
2212	377C	Digital Switch	0.3871	0.0035	0.0015	0.0006	0.0003	0.0007	0.0000	0.0065
2111	20C	Land	0.0005	0.0000	0.0000	0.0000	0.0000	0.0000		0.0000
2121	110C	Building	0.0208	0.0000	0.0001	0.0000	0.0000	0.0000		0.0003
		Total	**0.4084**	**0.0036**	**0.0016**	**0.0006**	**0.0003**	**0.0007**	**0.0000**	**0.0068**
Custom Ringing Third Line (Short/Short)										
2212	377C	Digital Switch	0.3871	0.0035	0.0015	0.0006	0.0003	0.0007	0.0000	0.0065
2111	20C	Land	0.0005	0.0000	0.0000	0.0000	0.0000	0.0000		0.0000

7/12/01
South Dakota

SGAT FEATURES

Acct	FRC	Account Name	Investment	Depreciation	Cost Of Money	Income Tax	Ad Valorem	Maintenance	Switch RTU	Total Capital Costs
2121	110C	Building	0.0208	0.0000	0.0001	0.0000	0.0000	0.0000		0.0003
		Total	**0.4084**	**0.0036**	**0.0016**	**0.0006**	**0.0003**	**0.0007**	**0.0000**	**0.0068**

Custom Ringing Third Line (Short/Short/Long)

2212	377C	Digital Switch	0.3871	0.0035	0.0015	0.0006	0.0003	0.0007	0.0000	0.0065
2111	20C	Land	0.0005	0.0000	0.0000	0.0000	0.0000	0.0000		0.0000
2121	110C	Building	0.0208	0.0000	0.0001	0.0000	0.0000	0.0000		0.0003
		Total	**0.4084**	**0.0036**	**0.0016**	**0.0006**	**0.0003**	**0.0007**	**0.0000**	**0.0068**

Data Call Protection (DMS 100)

2212	377C	Digital Switch	0.0000	0.0000	0.0000	0.0000	0.0000	0.0000	0.0000	0.0000
		Total	**0.0000**	**0.0000**	**0.0000**	**0.0000**	**0.0000**	**0.0000**	**0.0000**	**0.0000**

Dir Sta Sel/Busy Lamp Fld per arrangement

2212	377C	Digital Switch	68.4116	0.6209	0.2591	0.0980	0.0491	0.1194	0.0000	1.1464
2111	20C	Land	0.0958	0.0000	0.0008	0.0003	0.0001	0.0002		0.0013
2121	110C	Building	3.6737	0.0079	0.0229	0.0087	0.0026	0.0068		0.0490
		Total	**72.1810**	**0.6288**	**0.2828**	**0.1069**	**0.0518**	**0.1264**	**0.0000**	**1.1967**

Directed Call Pickup with Barge-in

2212	377C	Digital Switch	4.2006	0.0381	0.0159	0.0060	0.0030	0.0073	0.0000	0.0704
2111	20C	Land	0.0059	0.0000	0.0000	0.0000	0.0000	0.0000		0.0001
2121	110C	Building	0.2256	0.0005	0.0014	0.0005	0.0002	0.0004		0.0030
		Total	**4.4321**	**0.0386**	**0.0174**	**0.0066**	**0.0032**	**0.0078**	**0.0000**	**0.0735**

Directed Call Pickup without Barge-in

2212	377C	Digital Switch	1.0783	0.0098	0.0041	0.0015	0.0008	0.0019	0.0000	0.0181
2111	20C	Land	0.0015	0.0000	0.0000	0.0000	0.0000	0.0000		0.0000
2121	110C	Building	0.0579	0.0001	0.0004	0.0001	0.0000	0.0001		0.0008
		Total	**1.1377**	**0.0099**	**0.0045**	**0.0017**	**0.0008**	**0.0020**	**0.0000**	**0.0189**

Distinctive Ring/Distinctive Call Waiting

2212	377C	Digital Switch	0.5269	0.0048	0.0020	0.0008	0.0004	0.0009	0.0000	0.0088

7/12/01
South Dakota

SGAT FEATURES

Acct	FRC	Account Name	Investment	Depreciation	Cost Of Money	Income Tax	Ad Valorem	Maintenance	Switch RTU	Total Capital Costs
2111	20C	Land	0.0007	0.0000	0.0000	0.0000	0.0000	0.0000		0.0000
2121	110C	Building	0.0283	0.0001	0.0002	0.0001	0.0000	0.0001		0.0004
		Total	**0.5559**	**0.0048**	**0.0022**	**0.0008**	**0.0004**	**0.0010**	**0.0000**	**0.0092**

Distinctive Ringing

2212	377C	Digital Switch	0.5161	0.0047	0.0020	0.0007	0.0004	0.0009	0.0000	0.0086
2111	20C	Land	0.0007	0.0000	0.0000	0.0000	0.0000	0.0000		0.0000
2121	110C	Building	0.0277	0.0001	0.0002	0.0001	0.0000	0.0001		0.0004
		Total	**0.5446**	**0.0047**	**0.0021**	**0.0008**	**0.0004**	**0.0010**	**0.0000**	**0.0090**

EBS - Set Interface - per station line

2212	377C	Digital Switch	53.1929	0.4828	0.2014	0.0762	0.0382	0.0928	0.0000	0.8914
2111	20C	Land	0.0745	0.0000	0.0006	0.0002	0.0001	0.0001		0.0010
2121	110C	Building	2.8565	0.0061	0.0178	0.0067	0.0021	0.0053		0.0381
		Total	**56.1239**	**0.4889**	**0.2199**	**0.0831**	**0.0403**	**0.0983**	**0.0000**	**0.9305**

Executive Busy Overide

2212	377C	Digital Switch	0.0559	0.0005	0.0002	0.0001	0.0000	0.0001	0.0000	0.0009
2111	20C	Land	0.0001	0.0000	0.0000	0.0000	0.0000	0.0000		0.0000
2121	110C	Building	0.0030	0.0000	0.0000	0.0000	0.0000	0.0000		0.0000
		Total	**0.0590**	**0.0005**	**0.0002**	**0.0001**	**0.0000**	**0.0001**	**0.0000**	**0.0010**

Expensive Route Warning Tone- per system

2212	377C	Digital Switch	0.0000	0.0000	0.0000	0.0000	0.0000	0.0000	0.0000	0.0000
		Total	**0.0000**	**0.0000**	**0.0000**	**0.0000**	**0.0000**	**0.0000**	**0.0000**	**0.0000**

Facility Restriction Level - per system

2212	377C	Digital Switch	0.0000	0.0000	0.0000	0.0000	0.0000	0.0000	0.0000	0.0000
		Total	**0.0000**	**0.0000**	**0.0000**	**0.0000**	**0.0000**	**0.0000**	**0.0000**	**0.0000**

Feature Display

2212	377C	Digital Switch	0.0082	0.0001	0.0000	0.0000	0.0000	0.0000	0.0000	0.0001
2111	20C	Land	0.0000	0.0000	0.0000	0.0000	0.0000	0.0000		0.0000
2121	110C	Building	0.0004	0.0000	0.0000	0.0000	0.0000	0.0000		0.0000

7/12/01
South Dakota

SGAT FEATURES

Acct	FRC	Account Name	Investment	Depreciation	Cost Of Money	Income Tax	Ad Valorem	Maintenance	Switch RTU	Total Capital Costs
		Total	**0.0087**	**0.0001**	**0.0000**	**0.0000**	**0.0000**	**0.0000**	**0.0000**	**0.0001**

Group Intercom

2212	377C	Digital Switch	3.1957	0.0290	0.0121	0.0046	0.0023	0.0056	0.0000	0.0536
2111	20C	Land	0.0045	0.0000	0.0000	0.0000	0.0000	0.0000		0.0001
2121	110C	Building	0.1716	0.0004	0.0011	0.0004	0.0001	0.0003		0.0023
		Total	**3.3718**	**0.0294**	**0.0132**	**0.0050**	**0.0024**	**0.0059**	**0.0000**	**0.0559**

Hot Line - per line

2212	377C	Digital Switch	2.1947	0.0199	0.0083	0.0031	0.0016	0.0038	0.0000	0.0368
2111	20C	Land	0.0031	0.0000	0.0000	0.0000	0.0000	0.0000		0.0000
2121	110C	Building	0.1179	0.0003	0.0007	0.0003	0.0001	0.0002		0.0016
		Total	**2.3156**	**0.0202**	**0.0091**	**0.0034**	**0.0017**	**0.0041**	**0.0000**	**0.0384**

Hunting: Multiposition Circular Hunting

2212	377C	Digital Switch	7.6922	0.0698	0.0291	0.0110	0.0055	0.0134	0.0000	0.1289
2111	20C	Land	0.0108	0.0000	0.0001	0.0000	0.0000	0.0000		0.0001
2121	110C	Building	0.4131	0.0009	0.0026	0.0010	0.0003	0.0008		0.0055
		Total	**8.1161**	**0.0707**	**0.0318**	**0.0120**	**0.0058**	**0.0142**	**0.0000**	**0.1346**

Hunting: Multiposition Hunt Queuing

2212	377C	Digital Switch	6.0076	0.0545	0.0228	0.0086	0.0043	0.0105	0.0000	0.1007
2111	20C	Land	0.0084	0.0000	0.0001	0.0000	0.0000	0.0000		0.0001
2121	110C	Building	0.3226	0.0007	0.0020	0.0008	0.0002	0.0006		0.0043
		Total	**6.3387**	**0.0552**	**0.0248**	**0.0094**	**0.0045**	**0.0111**	**0.0000**	**0.1051**

Hunting: Multiposition Series Hunting

2212	377C	Digital Switch	7.6922	0.0698	0.0291	0.0110	0.0055	0.0134	0.0000	0.1289
2111	20C	Land	0.0108	0.0000	0.0001	0.0000	0.0000	0.0000		0.0001
2121	110C	Building	0.4131	0.0009	0.0026	0.0010	0.0003	0.0008		0.0055
		Total	**8.1161**	**0.0707**	**0.0318**	**0.0120**	**0.0058**	**0.0142**	**0.0000**	**0.1346**

Hunting: Multiposition with Announcement in Queue

2212	377C	Digital Switch	121.7238	1.1047	0.4610	0.1743	0.0874	0.2124	0.0000	2.0398

7/12/01
South Dakota

SGAT FEATURES

Acct	FRC	Account Name	Investment	Depreciation	Cost Of Money	Income Tax	Ad Valorem	Maintenance	Switch RTU	Total Capital Costs
2111	20C	Land	0.1704	0.0000	0.0014	0.0005	0.0001	0.0003		0.0023
2121	110C	Building	6.5366	0.0141	0.0408	0.0154	0.0047	0.0122		0.0871
		Total	**128.4308**	**1.1188**	**0.5031**	**0.1903**	**0.0922**	**0.2249**	**0.0000**	**2.1293**

Hunting: Multiposition with Music in Queue

2212	377C	Digital Switch	41.4372	0.3761	0.1569	0.0593	0.0297	0.0723	0.0000	0.6944
2111	20C	Land	0.0580	0.0000	0.0005	0.0002	0.0000	0.0001		0.0008
2121	110C	Building	2.2252	0.0048	0.0139	0.0053	0.0016	0.0041		0.0297
		Total	**43.7204**	**0.3809**	**0.1713**	**0.0648**	**0.0314**	**0.0766**	**0.0000**	**0.7249**

Incoming Calls Barred

2212	377C	Digital Switch	0.2774	0.0025	0.0011	0.0004	0.0002	0.0005	0.0000	0.0046
2111	20C	Land	0.0004	0.0000	0.0000	0.0000	0.0000	0.0000		0.0000
2121	110C	Building	0.0149	0.0000	0.0001	0.0000	0.0000	0.0000		0.0002
		Total	**0.2927**	**0.0025**	**0.0011**	**0.0004**	**0.0002**	**0.0005**	**0.0000**	**0.0049**

International Direct Dial Blocking

2212	377C	Digital Switch	0.4088	0.0037	0.0015	0.0006	0.0003	0.0007	0.0000	0.0069
2111	20C	Land	0.0006	0.0000	0.0000	0.0000	0.0000	0.0000		0.0000
2121	110C	Building	0.0220	0.0000	0.0001	0.0001	0.0000	0.0000		0.0003
		Total	**0.4313**	**0.0038**	**0.0017**	**0.0006**	**0.0003**	**0.0008**	**0.0000**	**0.0072**

ISDN Short Hunt

2212	377C	Digital Switch	19.5368	0.1773	0.0740	0.0280	0.0140	0.0341	0.0000	0.3274
2111	20C	Land	0.0274	0.0000	0.0002	0.0001	0.0000	0.0001		0.0004
2121	110C	Building	1.0491	0.0023	0.0065	0.0025	0.0008	0.0020		0.0140
		Total	**20.6132**	**0.1796**	**0.0808**	**0.0305**	**0.0148**	**0.0361**	**0.0000**	**0.3418**

Line Side Answer Supervision

2212	377C	Digital Switch	0.7848	0.0071	0.0030	0.0011	0.0006	0.0014	0.0000	0.0132
2111	20C	Land	0.0011	0.0000	0.0000	0.0000	0.0000	0.0000		0.0000
2121	110C	Building	0.0421	0.0001	0.0003	0.0001	0.0000	0.0001		0.0006
		Total	**0.8280**	**0.0072**	**0.0032**	**0.0012**	**0.0006**	**0.0014**	**0.0000**	**0.0137**

Loudspeaker Paging - per trunk group

7/12/01
South Dakota

SGAT FEATURES

Acct	FRC	Account Name	Investment	Depreciation	Cost Of Money	Income Tax	Ad Valorem	Maintenance	Switch RTU	Total Capital Costs
2212	377C	Digital Switch	851.8901	7.7316	3.2262	1.2200	0.6114	1.4865	0.0000	14.2758
2111	20C	Land	1.1926	0.0000	0.0096	0.0036	0.0009	0.0022		0.0163
2121	110C	Building	45.7465	0.0984	0.2854	0.1079	0.0328	0.0852		0.6098
		Total	**898.8292**	**7.8300**	**3.5212**	**1.3316**	**0.6451**	**1.5739**	**0.0000**	**14.9019**

Make Busy Arrangements - per group

2212	377C	Digital Switch	11.1794	0.1015	0.0423	0.0160	0.0080	0.0195	0.0000	0.1873
2111	20C	Land	0.0157	0.0000	0.0001	0.0000	0.0000	0.0000		0.0002
2121	110C	Building	0.6003	0.0013	0.0037	0.0014	0.0004	0.0011		0.0080
		Total	**11.7954**	**0.1028**	**0.0462**	**0.0175**	**0.0085**	**0.0207**	**0.0000**	**0.1956**

Make Busy Arrangements - per line

2212	377C	Digital Switch	2.7948	0.0254	0.0106	0.0040	0.0020	0.0049	0.0000	0.0468
2111	20C	Land	0.0039	0.0000	0.0000	0.0000	0.0000	0.0000		0.0001
2121	110C	Building	0.1501	0.0003	0.0009	0.0004	0.0001	0.0003		0.0020
		Total	**2.9488**	**0.0257**	**0.0116**	**0.0044**	**0.0021**	**0.0052**	**0.0000**	**0.0489**

Message Center - per main station line

2212	377C	Digital Switch	0.0000	0.0000	0.0000	0.0000	0.0000	0.0000	0.0000	0.0000
		Total	**0.0000**	**0.0000**	**0.0000**	**0.0000**	**0.0000**	**0.0000**	**0.0000**	**0.0000**

Message Waiting Indication Audible/Visual

2212	377C	Digital Switch	2.0926	0.0190	0.0079	0.0030	0.0015	0.0037	0.0000	0.0351
2111	20C	Land	0.0029	0.0000	0.0000	0.0000	0.0000	0.0000		0.0000
2121	110C	Building	0.1124	0.0002	0.0007	0.0003	0.0001	0.0002		0.0015
		Total	**2.2079**	**0.0192**	**0.0086**	**0.0033**	**0.0016**	**0.0039**	**0.0000**	**0.0366**

Message Waiting Visual

2212	377C	Digital Switch	2.0926	0.0190	0.0079	0.0030	0.0015	0.0037	0.0000	0.0351
2111	20C	Land	0.0029	0.0000	0.0000	0.0000	0.0000	0.0000		0.0000
2121	110C	Building	0.1124	0.0002	0.0007	0.0003	0.0001	0.0002		0.0015
		Total	**2.2079**	**0.0192**	**0.0086**	**0.0033**	**0.0016**	**0.0039**	**0.0000**	**0.0366**

Music On Hold - per system

7/12/01
South Dakota

SGAT FEATURES

Acct	FRC	Account Name	Investment	Depreciation	Cost Of Money	Income Tax	Ad Valorem	Maintenance	Switch RTU	Total Capital Costs
2212	377C	Digital Switch	887.5582	8.0553	3.3613	1.2711	0.6370	1.5487	0.0000	14.8735
2111	20C	Land	1.2426	0.0000	0.0100	0.0038	0.0009	0.0023		0.0170
2121	110C	Building	47.6619	0.1026	0.2974	0.1125	0.0342	0.0888		0.6354
		Total	**936.4626**	**8.1579**	**3.6686**	**1.3874**	**0.6721**	**1.6398**	**0.0000**	**15.5258**

Network Speed Call

2212	377C	Digital Switch	0.0119	0.0001	0.0000	0.0000	0.0000	0.0000	0.0000	0.0002
2111	20C	Land	0.0000	0.0000	0.0000	0.0000	0.0000	0.0000		0.0000
2121	110C	Building	0.0006	0.0000	0.0000	0.0000	0.0000	0.0000		0.0000
		Total	**0.0126**	**0.0001**	**0.0000**	**0.0000**	**0.0000**	**0.0000**	**0.0000**	**0.0002**

Night Service Arrangement

2212	377C	Digital Switch	0.0616	0.0006	0.0002	0.0001	0.0000	0.0001	0.0000	0.0010
2111	20C	Land	0.0001	0.0000	0.0000	0.0000	0.0000	0.0000		0.0000
2121	110C	Building	0.0033	0.0000	0.0000	0.0000	0.0000	0.0000		0.0000
		Total	**0.0649**	**0.0006**	**0.0003**	**0.0001**	**0.0000**	**0.0001**	**0.0000**	**0.0011**

Outgoing Calls Barred

2212	377C	Digital Switch	0.0208	0.0002	0.0001	0.0000	0.0000	0.0000	0.0000	0.0003
2111	20C	Land	0.0000	0.0000	0.0000	0.0000	0.0000	0.0000		0.0000
2121	110C	Building	0.0011	0.0000	0.0000	0.0000	0.0000	0.0000		0.0000
		Total	**0.0220**	**0.0002**	**0.0001**	**0.0000**	**0.0000**	**0.0000**	**0.0000**	**0.0004**

Outgoing Trunk Queuing

2212	377C	Digital Switch	2.1620	0.0196	0.0082	0.0031	0.0016	0.0038	0.0000	0.0362
2111	20C	Land	0.0030	0.0000	0.0000	0.0000	0.0000	0.0000		0.0000
2121	110C	Building	0.1161	0.0002	0.0007	0.0003	0.0001	0.0002		0.0015
		Total	**2.2812**	**0.0199**	**0.0089**	**0.0034**	**0.0016**	**0.0040**	**0.0000**	**0.0378**

Privacy Release

2212	377C	Digital Switch	0.1227	0.0011	0.0005	0.0002	0.0001	0.0002	0.0000	0.0021
2111	20C	Land	0.0002	0.0000	0.0000	0.0000	0.0000	0.0000		0.0000
2121	110C	Building	0.0066	0.0000	0.0000	0.0000	0.0000	0.0000		0.0001
		Total	**0.1295**	**0.0011**	**0.0005**	**0.0002**	**0.0001**	**0.0002**	**0.0000**	**0.0021**

7/12/01
South Dakota

SGAT FEATURES

Acct	FRC	Account Name	Investment	Depreciation	Cost Of Money	Income Tax	Ad Valorem	Maintenance	Switch RTU	Total Capital Costs
Query Time										
2212	377C	Digital Switch	6.7333	0.0611	0.0255	0.0096	0.0048	0.0117	0.0000	0.1128
2111	20C	Land	0.0094	0.0000	0.0001	0.0000	0.0000	0.0000		0.0001
2121	110C	Building	0.3616	0.0008	0.0023	0.0009	0.0003	0.0007		0.0048
		Total	**7.1043**	**0.0619**	**0.0278**	**0.0105**	**0.0051**	**0.0124**	**0.0000**	**0.1178**
Speed Calling 1 Digit Controller										
2212	377C	Digital Switch	0.3525	0.0032	0.0013	0.0005	0.0003	0.0006	0.0000	0.0059
2111	20C	Land	0.0005	0.0000	0.0000	0.0000	0.0000	0.0000		0.0000
2121	110C	Building	0.0189	0.0000	0.0001	0.0000	0.0000	0.0000		0.0003
		Total	**0.3720**	**0.0032**	**0.0015**	**0.0006**	**0.0003**	**0.0007**	**0.0000**	**0.0062**
Speed Calling 1 Digit User										
2212	377C	Digital Switch	0.3525	0.0032	0.0013	0.0005	0.0003	0.0006	0.0000	0.0059
2111	20C	Land	0.0005	0.0000	0.0000	0.0000	0.0000	0.0000		0.0000
2121	110C	Building	0.0189	0.0000	0.0001	0.0000	0.0000	0.0000		0.0003
		Total	**0.3720**	**0.0032**	**0.0015**	**0.0006**	**0.0003**	**0.0007**	**0.0000**	**0.0062**
Speed Calling 1# List Individual										
2212	377C	Digital Switch	0.3525	0.0032	0.0013	0.0005	0.0003	0.0006	0.0000	0.0059
2111	20C	Land	0.0005	0.0000	0.0000	0.0000	0.0000	0.0000		0.0000
2121	110C	Building	0.0189	0.0000	0.0001	0.0000	0.0000	0.0000		0.0003
		Total	**0.3720**	**0.0032**	**0.0015**	**0.0006**	**0.0003**	**0.0007**	**0.0000**	**0.0062**
Speed Calling 2 Digit Controller										
2212	377C	Digital Switch	0.3525	0.0032	0.0013	0.0005	0.0003	0.0006	0.0000	0.0059
2111	20C	Land	0.0005	0.0000	0.0000	0.0000	0.0000	0.0000		0.0000
2121	110C	Building	0.0189	0.0000	0.0001	0.0000	0.0000	0.0000		0.0003
		Total	**0.3720**	**0.0032**	**0.0015**	**0.0006**	**0.0003**	**0.0007**	**0.0000**	**0.0062**
Speed Calling 2 Digit User										
2212	377C	Digital Switch	0.3525	0.0032	0.0013	0.0005	0.0003	0.0006	0.0000	0.0059
2111	20C	Land	0.0005	0.0000	0.0000	0.0000	0.0000	0.0000		0.0000

7/12/01
South Dakota

SGAT FEATURES

Acct	FRC	Account Name	Investment	Depreciation	Cost Of Money	Income Tax	Ad Valorem	Maintenance	Switch RTU	Total Capital Costs
2121	110C	Building	0.0189	0.0000	0.0001	0.0000	0.0000	0.0000		0.0003
		Total	**0.3720**	**0.0032**	**0.0015**	**0.0006**	**0.0003**	**0.0007**	**0.0000**	**0.0062**

Speed Calling 2# List Individual

2212	377C	Digital Switch	0.3525	0.0032	0.0013	0.0005	0.0003	0.0006	0.0000	0.0059
2111	20C	Land	0.0005	0.0000	0.0000	0.0000	0.0000	0.0000		0.0000
2121	110C	Building	0.0189	0.0000	0.0001	0.0000	0.0000	0.0000		0.0003
		Total	**0.3720**	**0.0032**	**0.0015**	**0.0006**	**0.0003**	**0.0007**	**0.0000**	**0.0062**

Speed Calling 30 Number

2212	377C	Digital Switch	0.3525	0.0032	0.0013	0.0005	0.0003	0.0006	0.0000	0.0059
2111	20C	Land	0.0005	0.0000	0.0000	0.0000	0.0000	0.0000		0.0000
2121	110C	Building	0.0189	0.0000	0.0001	0.0000	0.0000	0.0000		0.0003
		Total	**0.3720**	**0.0032**	**0.0015**	**0.0006**	**0.0003**	**0.0007**	**0.0000**	**0.0062**

Speed Calling 8 Number

2212	377C	Digital Switch	0.3525	0.0032	0.0013	0.0005	0.0003	0.0006	0.0000	0.0059
2111	20C	Land	0.0005	0.0000	0.0000	0.0000	0.0000	0.0000		0.0000
2121	110C	Building	0.0189	0.0000	0.0001	0.0000	0.0000	0.0000		0.0003
		Total	**0.3720**	**0.0032**	**0.0015**	**0.0006**	**0.0003**	**0.0007**	**0.0000**	**0.0062**

Station Camp-On Service - per main station

2212	377C	Digital Switch	328.2528	2.9792	1.2431	0.4701	0.2356	0.5728	0.0000	5.5008
2111	20C	Land	0.4596	0.0000	0.0037	0.0014	0.0003	0.0009		0.0063
2121	110C	Building	17.6272	0.0379	0.1100	0.0416	0.0127	0.0328		0.2350
		Total	**346.3396**	**3.0171**	**1.3568**	**0.5131**	**0.2486**	**0.6065**	**0.0000**	**5.7420**

Station Dial Conferencing (6 Way)

2212	377C	Digital Switch	63.5380	0.5767	0.2406	0.0910	0.0456	0.1109	0.0000	1.0648
2111	20C	Land	0.0890	0.0000	0.0007	0.0003	0.0001	0.0002		0.0012
2121	110C	Building	3.4120	0.0073	0.0213	0.0081	0.0024	0.0064		0.0455
		Total	**67.0389**	**0.5840**	**0.2626**	**0.0993**	**0.0481**	**0.1174**	**0.0000**	**1.1115**

Station Message Detail Recording (SMDR)

7/12/01
South Dakota

SGAT FEATURES

Acct	FRC	Account Name	Investment	Depreciation	Cost Of Money	Income Tax	Ad Valorem	Maintenance	Switch RTU	Total Capital Costs
2212	377C	Digital Switch	0.9941	0.0090	0.0038	0.0014	0.0007	0.0017	0.0000	0.0167
2124	2124	General Purpose Computers	0.3882	0.0053	0.0015	0.0006	0.0003	0.0000	0.0000	0.0077
2111	20C	Land	0.0014	0.0000	0.0000	0.0000	0.0000	0.0000		0.0000
2121	110C	Building	0.0534	0.0001	0.0003	0.0001	0.0000	0.0001		0.0007
		Total	**1.4371**	**0.0145**	**0.0056**	**0.0021**	**0.0010**	**0.0018**	**0.0000**	**0.0251**

Three Way Calling

2212	377C	Digital Switch	9.9983	0.0907	0.0379	0.0143	0.0072	0.0174	0.0000	0.1675
2111	20C	Land	0.0140	0.0000	0.0001	0.0000	0.0000	0.0000		0.0002
2121	110C	Building	0.5369	0.0012	0.0033	0.0013	0.0004	0.0010		0.0072
		Total	**10.5492**	**0.0919**	**0.0413**	**0.0156**	**0.0076**	**0.0185**	**0.0000**	**0.1749**

Time and Date Display

2212	377C	Digital Switch	4.1698	0.0378	0.0158	0.0060	0.0030	0.0073	0.0000	0.0699
2111	20C	Land	0.0058	0.0000	0.0000	0.0000	0.0000	0.0000		0.0001
2121	110C	Building	0.2239	0.0005	0.0014	0.0005	0.0002	0.0004		0.0030
		Total	**4.3995**	**0.0383**	**0.0172**	**0.0065**	**0.0032**	**0.0077**	**0.0000**	**0.0729**

Time of Day Control for ARS - per system

2212	377C	Digital Switch	0.0000	0.0000	0.0000	0.0000	0.0000	0.0000	0.0000	0.0000
		Total	**0.0000**	**0.0000**	**0.0000**	**0.0000**	**0.0000**	**0.0000**	**0.0000**	**0.0000**

Time of Day NCOS Update

2212	377C	Digital Switch	0.2182	0.0020	0.0008	0.0003	0.0002	0.0004	0.0000	0.0037
2111	20C	Land	0.0003	0.0000	0.0000	0.0000	0.0000	0.0000		0.0000
2121	110C	Building	0.0117	0.0000	0.0001	0.0000	0.0000	0.0000		0.0002
		Total	**0.2302**	**0.0020**	**0.0009**	**0.0003**	**0.0002**	**0.0004**	**0.0000**	**0.0038**

Time of Day Routing - per line

2212	377C	Digital Switch	2.3259	0.0211	0.0088	0.0033	0.0017	0.0041	0.0000	0.0390
2111	20C	Land	0.0033	0.0000	0.0000	0.0000	0.0000	0.0000		0.0000
2121	110C	Building	0.1249	0.0003	0.0008	0.0003	0.0001	0.0002		0.0017
		Total	**2.4541**	**0.0214**	**0.0096**	**0.0036**	**0.0018**	**0.0043**	**0.0000**	**0.0407**

Toll Restriction Service

7/12/01
South Dakota

SGAT FEATURES

Acct	FRC	Account Name	Investment	Depreciation	Cost Of Money	Income Tax	Ad Valorem	Maintenance	Switch RTU	Total Capital Costs
2212	377C	Digital Switch	0.1984	0.0018	0.0008	0.0003	0.0001	0.0003	0.0000	0.0033
2111	20C	Land	0.0003	0.0000	0.0000	0.0000	0.0000	0.0000		0.0000
2121	110C	Building	0.0107	0.0000	0.0001	0.0000	0.0000	0.0000		0.0001
		Total	**0.2093**	**0.0018**	**0.0008**	**0.0003**	**0.0002**	**0.0004**	**0.0000**	**0.0035**

Trunk Answer Any Station

2212	377C	Digital Switch	0.0616	0.0006	0.0002	0.0001	0.0000	0.0001	0.0000	0.0010
2111	20C	Land	0.0001	0.0000	0.0000	0.0000	0.0000	0.0000		0.0000
2121	110C	Building	0.0033	0.0000	0.0000	0.0000	0.0000	0.0000		0.0000
		Total	**0.0649**	**0.0006**	**0.0003**	**0.0001**	**0.0000**	**0.0001**	**0.0000**	**0.0011**

Trunk Verification from Designated Station

2212	377C	Digital Switch	0.0000	0.0000	0.0000	0.0000	0.0000	0.0000	0.0000	0.0000
		Total	**0.0000**	**0.0000**	**0.0000**	**0.0000**	**0.0000**	**0.0000**	**0.0000**	**0.0000**

UCD in hunt group - per line

2212	377C	Digital Switch	317.5006	2.8816	1.2024	0.4547	0.2279	0.5540	0.0000	5.3206
2111	20C	Land	0.4445	0.0000	0.0036	0.0014	0.0003	0.0008		0.0061
2121	110C	Building	17.0498	0.0367	0.1064	0.0402	0.0122	0.0318		0.2273
		Total	**334.9949**	**2.9183**	**1.3124**	**0.4963**	**0.2404**	**0.5866**	**0.0000**	**5.5540**

UCD with Music After Delay

2212	377C	Digital Switch	209.2297	1.8989	0.7924	0.2997	0.1502	0.3651	0.0000	3.5062
2111	20C	Land	0.2929	0.0000	0.0024	0.0009	0.0002	0.0005		0.0040
2121	110C	Building	11.2356	0.0242	0.0701	0.0265	0.0081	0.0209		0.1498
		Total	**220.7583**	**1.9231**	**0.8648**	**0.3271**	**0.1584**	**0.3866**	**0.0000**	**3.6600**

Section 2

Cost Calculations

Service:	**SGAT FEATURES**
State Name:	SOUTH DAKOTA
2-Character Jurisdiction Abbreviation:	SD
Study Year:	2001
Study Completion Date:	JULY 2001

SECTION A

Switching Investments - Features
Source: SCM

Account Codes - per system
Attendant Access Line - per station line
Audible Message Waiting
Authorization Codes - per system
Auto Callback
Automatic Line
Automatic Route Selection - Common Equip. per system
Call Forward Don't Answer - All Calls
Call Forward Don't Answer - Incoming Only
Call Forwarding Variable Remote
Call Forwarding: Busy Line (Expanded)
Call Forwarding: Busy Line (External)
Call Forwarding: Busy Line (External) Don't Answer
Call Forwarding: Busy Line (Overflow)
Call Forwarding: Busy Line (Overflow) Don't Answer
Call Forwarding: Busy Line (Programmable)
Call Forwarding: Busy Line/Don't Answer (Expanded)
Call Forwarding: Don't Answer
Call Forwarding: Don't Answer (Expanded)
Call Forwarding: Don't Answer (Programmable)
Call Forwarding: Variable
Call Forwarding: Variable - no call complete option
Call Hold
Call Hold/3-Way/Call Transfer
Call Park (Basic - Store & Retrieve)
Call Pickup
Call Transfer
Call Waiting Dial Originating
Call Waiting Indication - per timing state
Call Waiting Originating
Call Waiting Terminating - All Calls
Call Waiting Terminating - Incoming Only
Call Waiting/ Cancel Call Waiting
Centrex Plus DID numbers per number
Centrex Plus to Centrex Plus
Centrex Plus to IC Carrier
Centrex Plus to PBX/Key Blocked
Centrex Plus to PBX/Key Non-Blocked
CFBL - All Calls
CFBL - Incoming Only
CLASS - Anonymous Call Rejection
CLASS - Call Waiting ID
CLASS - Calling Name & Number
CLASS - Calling Number Delivery
CLASS - Calling Number Delivery - Blocking
CLASS - Continuous Redial
CLASS - Last Call Return
CLASS - Priority Calling
CLASS - Selective Call Forwarding
CLASS - Selective Call Rejection
Common Equipment per 1.544 Mbps facility (DS1)

Conference Calling - Meet Me
Conference Calling - Preset
Data Call Protection (DMS 100)
Dir Sta Sel/Busy Lamp Fld per arrangement
Directed Call Pickup Barge-In
Distinctive Ring/Distinctive Call Waiting
Distinctive Ringing
EBS - Set Interface - per station line
Executive Busy Overide
Expensive Route Warning Tone- per system
Facility Restriction Level - per system
Hot Line - per line
Loudspeaker Paging - per trunk group
Make Busy Arrangements - per group
Make Busy Arrangements - per line
Message Center - per main station line
Message Waiting Indication Audible/Visual
Message Waiting Visual
Multiple Position Hunt - per announcement group
Multiple Position Hunt - per line
Multiple Position Hunt - queuing per group
Music On Hold - per system (5ESS)
Music On Hold - per system (DMS100)
Network Speed Call
Night Service Arrangement
Privacy Release
Query Time
Speed Calling 1 Digit Controller
Speed Calling 1 Digit User
Speed Calling 1# List Individual
Speed Calling 2 Digit Controller
Speed Calling 2 Digit User
Speed Calling 2# List Individual
Speed Calling 30 Number
Speed Calling 8 Number
Station Camp-On Service - per main station
Station Dial Conferencing (6 Way)
Three Way Calling
Time of Day Control for ARS - per system
Time of Day NCOS Update
Time of Day Routing - per line
Trunk Answer Any Station
Trunk Verification from Designated Station
UCD in hunt group - per hunt group
UCD in hunt group - per line
UCD with Music After Delay

SECTION B

Centrex Management System (CMS)
- Investment and Expense
Source: U S WEST CMS Study

Investment per Line	2124	$	1.1113
Investment per Line	377C	$	0.0223
Expense per Line		$	0.3524

Station Message Detail Recording (SMDR)
- Investment and Expense
Source: U S WEST SMDR Study

Investment per Line	2124	$	0.39
Expense Per Line		$	0.05
Investment per Line	377C	$	0.99

SECTION C

Switch Component: Electronic Card

Source: Product Management

Electronic Business Set C Card	377C	18.9667

SGAT FEATURES

SOUTH DAKOTA

Switching Cost Model (SCM) Output

	Investment STUDY	SGAT Features	C		E	Total (C+E)		
3	EF&I	US	0.16113643	0	0.067737038	0.2288734671	377C	BASIC CENTRON Dial 0
4	EF&I	US	1.49396202	0	0.096241886	1.5902039055	377C	BASIC CENTRON Direct Inward Dialing
5	EF&I	US	0.02750672	0	0.000517702	0.0280244223	377C	CENTRON 10XXX Split Blocking
6	EF&I	US	2.191665724	0	0.134228744	2.3258944672	377C	CENTRON Automatic Route Selection - Circuit Switched Voice - Time of Day
7	EF&I	US	0.292911589	0	1.530519009	1.8234305978	377C	CENTRON Call Forward - Reason Display
8	EF&I	US	0.116966801	0	0.184173748	0.3011405483	377C	CENTRON Call Hold
9	EF&I	US	0.021641919	0	0.302146689	0.3237886075	377C	CENTRON Call Park Retrieve
10	EF&I	US	0.029864238	0	0.304396282	0.3342605197	377C	CENTRON Call Park Store
11	EF&I	US	0.162203982	0	0.110635197	0.2728391789	377C	CENTRON Call Pickup
12	EF&I	US	0.268035682	0	0.52628976	0.7943254414	377C	CENTRON Call Waiting - Originating
13	EF&I	US	0.538034948	0	1.054791684	1.5928266325	377C	CENTRON Call Waiting - Terminating
14	EF&I	US	1.746358613	0	2.108690121	3.8550487336	377C	CENTRON Called Name Display - Customer Activated
15	EF&I	US	0	0	0	0.	377C	CENTRON Data Call Protection
16	EF&I	US	111.1333029	0	10.59053498	121.7238379074	377C	CENTRON Delayed Announcements for MUPH Queue
17	EF&I	US	0.038701656	0	0.344261438	0.3829630947	377C	CENTRON Dial Call Waiting
18	EF&I	US	3.382824038	0	0.817787439	4.2006114765	377C	CENTRON Directed Call Pickup with Barge-in
19	EF&I	US	0.815161846	0	0.263093861	1.0782557071	377C	CENTRON Directed Call Pickup without Barge-in
20	EF&I	US	0.003598279	0	0.007111526	0.0107098048	377C	CENTRON Distinctive Call Waiting
21	EF&I	US	0.343038786	0	0.173108646	0.5161474315	377C	CENTRON Distinctive Ringing
22	EF&I	US	10.98946953	0	57.42210007	68.4115695953	377C	CENTRON DSS - Busy Lamp Field for Business Set
23	EF&I	US	0.008979137	0	0.04691771	0.0558968475	377C	CENTRON Executive Busy Override - Originator
24	EF&I	US	13.8274582	0	5.374122554	19.2015807582	377C	CENTRON Expensive Route Warning Tone for ARS
25	EF&I	US	60.01470184	0	1.12953198	61.1442338228	377C	CENTRON Facility Restriction Level Screening
26	EF&I	US	0.023246961	0	0.121469803	0.1447167639	377C	CENTRON Fast Transfer for MBS
27	EF&I	US	1.962321997	0	1.233410001	3.1957319975	377C	CENTRON Group Intercom - All Calls
28	EF&I	US	0.229827896	0	1.200893998	1.4307218939	377C	CENTRON Group Intercom - Inter GIC Call
29	EF&I	US	590.5172727	0	261.3728203	851.8900929842	377C	CENTRON Loudspeaker Paging - Analog Trunk
30	EF&I	US	0.01447653	0	0.001297841	0.0157743712	377C	CENTRON MADN Bridging - 3WC
31	EF&I	US	1.795827031	0	9.383542061	11.179369092	377C	CENTRON Make Set Busy - Intragroup
32	EF&I	US	437.980896	0	127.0397034	565.0205993652	377C	CENTRON Meet-Me Conference Large
33	EF&I	US	0.322537041	0	0.324370476	0.6469075166	377C	CENTRON Message Waiting Indication Audible/Visual
34	EF&I	US	2.911663214	0	12.19257852	15.1042417352	377C	CENTRON Message Waiting Indication with SS7
35	EF&I	US	3.502804995	0	6.134391785	9.6371967793	377C	CENTRON Message Waiting Set
36	EF&I	US	4.657044471	0	3.035203544	7.6922480146	377C	CENTRON Multiline Hunt
37	EF&I	US	35.92466379	0	5.512579074	41.4372428656	377C	CENTRON Music in Queue - Multi-Position Hunt Group
38	EF&I	US	1038.328003	0	19.59516907	1,057.9231719971	377C	CENTRON Music On Hold - Digital Trunk
39	EF&I	US	0.000329684	0	0.001722662	0.0020523461	377C	CENTRON Music On Hold for P-Phones
40	EF&I	US	0.001917874	0	0.01002126	0.011939134	377C	CENTRON Network Speed Call

SGAT FEATURES

SOUTH DAKOTA

Switching Cost Model (SCM) Output

	Investment STUDY	SGAT Features	C		E	Total (C+E)		
41	EF&I	US	0.347302268	0	1.814720311	2.162022579	377C	CENTRON Outgoing Trunk Queuing Without Recorded Announcement
42	EF&I	US	319.8373108	0	92.87198639	412.7092971802	377C	CENTRON Preset Conference
43	EF&I	US	5.89666605	0	0.110980697	6.0076467469	377C	CENTRON Queuing for MUPH
44	EF&I	US	273.9537964	0	54.2990303	328.2528266907	377C	CENTRON Station Camp On for Meridian Business Sets
45	EF&I	US	57.16852672	0	6.369462066	63.5379887829	377C	CENTRON Station Dial Conferencing
46	EF&I	US	0.035044789	0	0.183115706	0.2181604952	377C	CENTRON Time of Day NCOS
47	EF&I	US	0.044914569	0	0.0166431	0.0615576682	377C	CENTRON Trunk Answer Any Station
48	EF&I	US	0	0	0	0.	377C	CENTRON Trunk Verification From a Designated Station
49	EF&I	US	0.429307216	0	0.758076008	1.1873832237	377C	CLASS Call Waiting ID (Name & Number with SS7)
50	EF&I	US	4.93703285	0	8.717872855	13.6549057054	377C	CLASS Calling Name and Number (SS7 included)
51	EF&I	US	0.722240584	0	0.425684981	1.1479255649	377C	CLASS Calling Number Delivery - IEO Permanent
52	EF&I	US	3.876147953	0	1.484565986	5.3607139392	377C	CLASS Calling Number Delivery Blocking - IAO
53	EF&I	US	3.876147953	0	1.484565986	5.3607139392	377C	CLASS Calling Number Delivery Blocking - IEO
54	EF&I	US	0.216078592	0	2.538977987	2.7550565785	377C	CLASS Continuous Redial - IAO
55	EF&I	US	1.170341823	0	4.274163059	5.4445048822	377C	CLASS Continuous Redial - IEO
56	EF&I	US	0.004770745	0	2.236829574	2.2416003194	377C	CLASS Last Call Return - IAO
57	EF&I	US	0.01905813	0	0.040276296	0.0593344252	377C	CLASS Last Call Return - IEO
58	EF&I	US	2.933604718	0	1.726843713	4.66044843	377C	CLASS Priority Calling
59	EF&I	US	2.153953255	0	2.014645701	4.1685989567	377C	CLASS Selective Call Forwarding
60	EF&I	US	4.817746813	0	4.731920466	9.5496672791	377C	CLASS Selective Call Rejection
61	EF&I	US	9.851504518	0	0.364315771	10.2158202889	377C	CLASS Unidentified Caller Rejection - Acceptance & Rejection
62	EF&I	US	0.224300101	0	0.679856777	0.9041568786	377C	EBS Business Set Call Forward on a per Key Basis
63	EF&I	US	0.004014197	0	0.007161321	0.0111755179	377C	EBS Business Set Inspect Key
64	EF&I	US	0.052834	0	0.276067615	0.328901615	377C	EBS Key Short Hunt
65	EF&I	US	0.066042498	0	0.345084608	0.4111271054	377C	EBS Multiple Executive Message Waiting Keys per DN
66	EF&I	US	0.681685209	0	3.561935902	4.2436211109	377C	EBS Origination/Termination Line Select - Idle Line Select
67	EF&I	US	0.043924078	0	0.229511693	0.2734357715	377C	EBS Origination/Termination Line Select - Incoming Call Select
68	EF&I	US	0.052073199	0	0.272092402	0.3241656013	377C	EBS Origination/Termination Line Select - No Line Select
69	EF&I	US	0.401521593	0	0.383232073	0.7847536661	377C	FCC Answer Supervision - Line
70	EF&I	US	0.580817281	0	0.236336473	0.8171537539	377C	FCC Calling Number Delivery (ICLID) - Permanent
71	EF&I	US	0.001132824	0	0.00226691	0.003399734	377C	ISDN BASIC Auto Drop
72	EF&I	US	0.00132085	0	0.006901693	0.0082225431	377C	ISDN BASIC Feature Display
73	EF&I	US	1.813337919	0	2.356455619	4.1697935377	377C	ISDN BASIC Time and Date
74	EF&I	US	0.001747899	0	0.273408541	0.2751564397	377C	ISDN FEATURES Automatic Callback Calling/Ring Again
75	EF&I	US	0.141066298	0	0.096426182	0.2374924795	377C	ISDN FEATURES Call Forwarding - Incoming Only
76	EF&I	US	0.008849585	0	0.012830907	0.0216804912	377C	ISDN FEATURES Call Forwarding Intra Group Only (Use with Remote Activ
77	EF&I	US	0.073290651	0	0.106263234	0.1795538846	377C	ISDN FEATURES Call Forwarding Variable - IAO (Use with Remote Activatio
78	EF&I	US	0.335123807	0	0	0.3351238072	377C	ISDN FEATURES Call Forwarding-Don't Answer: Incoming Only

SGAT FEATURES

SOUTH DAKOTA

Switching Cost Model (SCM) Output

	Investment STUDY	SGAT Features	C		E	Total (C+E)		
79	EF&I	US	3.138339043	0	16.39842033	19.5367593765	377C	ISDN FEATURES Key Short Hunt
80	EF&I	US	297.8160095	0	267.1528931	564.9689025879	377C	ISDN FEATURES System Music On Hold - Digital Trunk
81	EF&I	US	7.94368E-05	0	0	0.0000794368	377C	ISDN MADN MADN - Automatic Exclusion
82	EF&I	US	7.94368E-05	0	0	0.0000794368	377C	ISDN MADN MADN - Manual Exclusion
83	EF&I	US	234.6925985	0	56.82380334	291.5164018184	377C	MODEL Account Codes
84	EF&I	US	107.9943216	0	15.55685336	123.5511749072	377C	MODEL Authorization Codes
85	EF&I	US	1.674754444	0	0.519897898	2.1946523426	377C	MODEL Hot Line
86	EF&I	US	0.080953427	0	0.041765861	0.1227192879	377C	MODEL Privacy Release
87	EF&I	US	4.030573845	0	2.702716112	6.733289957	377C	MODEL Query Time
88	EF&I	US	6.201254809	0	5.165751239	11.3670060483	377C	MODEL Uniform Call Distribution
89	EF&I	US	1.000389175	0	0.116982143	1.1173713177	377C	POTS Block Pay per Use Features
90	EF&I	US	0.126866389	0	0.057458795	0.1843251837	377C	POTS Call Forwarding Variable - IAO (Use with Remote Activation)
91	EF&I	US	0.189775243	0	0.363193913	0.5529691559	377C	POTS Call Forwarding Variable - IAO Customer Changeable
92	EF&I	US	0.126866389	0	0.057458795	0.1843251837	377C	POTS Call Forwarding Variable - IEO (Use with Remote Activation)
93	EF&I	US	0.189775243	0	0.363193913	0.5529691559	377C	POTS Call Forwarding Variable - IEO Customer Changeable
94	EF&I	US	0.163490557	0	0.321602265	0.4850928216	377C	POTS Call Forwarding-Busy Line - IAO Customer Changeable
95	EF&I	US	0.163507983	0	0.321621867	0.4851298499	377C	POTS Call Forwarding-Busy Line - IEO Customer Changeable
96	EF&I	US	0.638417796	0	0.102828395	0.7412461911	377C	POTS Call Forwarding-Busy Line - IEO Customer NonChangeable
97	EF&I	US	0.564023953	0	0.46794172	1.0319656731	377C	POTS Call Forwarding-Don't Answer: IAO Customer Changeable
98	EF&I	US	0.553201238	0	0.466444498	1.0196457359	377C	POTS Call Forwarding-Don't Answer: IEO Customer Changeable
99	EF&I	US	1.718106029	0	0.558520751	2.2766267795	377C	POTS Call Forwarding-Don't Answer: IEO Customer NonChangeable
100	EF&I	US	0.5464745	0	1.147725028	1.694199528	377C	POTS Call Waiting

SGAT FEATURES

SOUTH DAKOTA

Switching Cost Model (SCM) Output

1	Investment							
2	STUDY	**SGAT Features**	C		E	Total (C+E)		
3	EF&I	USW	0.321770393	0	0.162375885	0.484146278	377C	POTS Distinctive Ringing

SGAT FEATURES

SOUTH DAKOTA

Switching Cost Model (SCM) Output

1	Investment							
2	STUDY	**SGAT Features**	C		E	Total (C+E)		
3	EF&I	USW	0.257279062	0	0.129831469	0.387110531	377C	POTS Distinctive Ringing

SGAT FEATURES

SOUTH DAKOTA

Switching Cost Model (SCM) Output

1	Investment							
2	STUDY	**SGAT Features**	C		E	Total (C+E)		
3	EF&I	USW	90.28153868	0	17.13684343	107.4183821	377C	CENTRON Delayed Announcements for MUPH Queue
4	EF&I	USW	3.125936061	0	12.40807553	15.53401159	377C	CENTRON Message Waiting Indication with SS7
5	EF&I	USW	71.88207081	0	6.680045182	78.56211599	377C	CENTRON Music in Queue - Multi-Position Hunt Group
6	EF&I	USW	117.9335022	0	2.219618082	120.1531203	377C	CENTRON Queuing for MUPH

SGAT FEATURES

SOUTH DAKOTA

	Source	Source	Source	Source	Source	377C Investment	2124 Investment	Expense
	from: SCM Features Columns C+E	from: Inputs	from: SCM Cust Ring 2nd Columns C+E	from: SCM Cust Ring 3rd Columns C+E	from: SCM UCD Features Columns C+E	Total to: WINPC3 Investments Tab	Total to: WINPC3 Investments Tab	Total to: WINPC3 Investments Tab
10XXX Direct Dialed Blocking	Ln5					$ 0.0280		
Account Codes - per system	Ln83					$ 291.5164		
Attendant Access Line - per station line	Ln3					$ 0.2289		
Audible Message Waiting	(.9)Ln33+(.1)Ln34					$ 2.0926		
Authorization Codes - per system	Ln84					$ 123.5512		
Auto Callback	Ln74					$ 0.2752		
Automatic Line	Ln112					$ -		
Automatic Route Selection - Common Equip. per system	Ln6+Ln24+Ln25					$ 82.6717		
Blocking of pay per call services	Ln89					$ 1.1174		
Bridging	Ln30					$ 0.0158		
Call Drop	Ln71					$ 0.0034		
Call Exclusion - Automatic	Ln81					$ 0.0001		
Call Exclusion - Manual	Ln82					$ 0.0001		
Call Forward Don't Answer - All Calls	Ln99					$ 2.2766		
Call Forwarding Incoming Only	Ln75					$ 0.2375		
Call Forwarding Intra Group Only	Ln76+Ln77					$ 0.2012		
Call Forwarding Variable Remote	Ln90+Ln91+Ln92+Ln93					$ 1.4746		
Call Forwarding: Busy Line (Expanded)	Ln96					$ 0.7412		
Call Forwarding: Busy Line (External)	Ln96					$ 0.7412		
Call Forwarding: Busy Line (External) Don't Answer	Ln96+Ln99					$ 3.0179		
Call Forwarding: Busy Line (Overflow)	Ln96					$ 0.7412		
Call Forwarding: Busy Line (Overflow) Don't Answer	Ln96+Ln99					$ 3.0179		
Call Forwarding: Busy Line (Programmable)	Ln94+Ln95					$ 0.9702		
Call Forwarding: Busy Line/Don't Answer (Expanded)	Ln96+Ln99					$ 3.0179		
Call Forwarding: Don't Answer	Ln99					$ 2.2766		
Call Forwarding: Don't Answer (Expanded)	Ln99					$ 2.2766		
Call Forwarding: Don't Answer (Programmable)	Ln97+Ln98					$ 2.0516		
Call Forwarding: Variable	Ln91+Ln93					$ 1.1059		
Call Forwarding: Variable - no call complete option	Ln91+Ln93					$ 1.1059		
Call Hold	Ln8					$ 0.3011		
Call Hold/3-Way/Call Transfer	Ln107					$ 9.9983		
Call Park (Basic - Store & Retrieve)	Ln9+Ln10					$ 0.6580		
Call Pickup	Ln11					$ 0.2728		
Call Transfer	Ln107					$ 9.9983		

SGAT FEATURES

SOUTH DAKOTA

	Source	Source	Source	Source	Source	377C Investment	2124 Investment	Expense
	from: SCM Features Columns C+E	from: Inputs	from: SCM Cust Ring 2nd Columns C+E	from: SCM Cust Ring 3rd Columns C+E	from: SCM UCD Features Columns C+E	Total to: WINPC3 Investments Tab	Total to: WINPC3 Investments Tab	Total to: WINPC3 Investments Tab
Call Waiting Dial Originating	Ln17					$ 0.3830		
Call Waiting Indication - per timing state					Ln4	$ 15.5340		
Call Waiting Originating	Ln12					$ 0.7943		
Call Waiting Terminating - All Calls	Ln13					$ 1.5928		
Call Waiting Terminating - Incoming Only	Ln13					$ 1.5928		
Call Waiting/ Cancel Call Waiting	Ln100+Ln101					$ 2.5506		
Centrex Management System (CMS)		G121,122,123				$ 0.0223	$ 1.1113	$ 0.3524
Centrex Plus DID numbers per number	Ln4					$ 1.5902		
Centrex Plus to Centrex Plus	(.56)Ln109 + (.44)Ln110					$ 210.7252		
Centrex Plus to IC Carrier	(.56)Ln109 + (.44)Ln110					$ 210.7252		
Centrex Plus to PBX/Key Blocked	(.56)Ln109 + (.44)Ln110					$ 210.7252		
Centrex Plus to PBX/Key Non-Blocked	(.56)Ln109 + (.44)Ln110					$ 210.7252		
CFBL - All Calls	Ln96					$ 0.7412		
CFBL - Incoming Only	Ln96					$ 0.7412		
CFDA Incoming Only	Ln78					$ 0.3351		
CLASS - Anonymous Call Rejection	Ln61					$ 10.2158		
CLASS - Call Waiting ID	Ln49					$ 1.1874		
CLASS - Calling Name & Number	Ln50					$ 13.6549		
CLASS - Calling Number Delivery	Ln51					$ 1.1479		
CLASS - Calling Number Delivery - Blocking	Ln52+Ln53					$ 10.7214		
CLASS - Continuous Redial	Ln54+Ln55					$ 8.1996		
CLASS - Last Call Return	Ln56+Ln57					$ 2.3009		
CLASS - Priority Calling	Ln58					$ 4.6604		
CLASS - Selective Call Forwarding	Ln59					$ 4.1686		
CLASS - Selective Call Rejection	Ln60					$ 9.5497		
Conference Calling - Meet Me	Ln32					$ 565.0206		
Conference Calling - Preset	Ln42					$ 412.7093		
Custom Ringing First Line (Short/Long/Short)	Ln21					$ 0.5161		
Custom Ringing First Line (Short/Short)	Ln21					$ 0.5161		
Custom Ringing First Line (Short/Short/Long)	Ln21					$ 0.5161		
Custom Ringing Second Line (Short/Long/Short)			Ln3			$ 0.4841		
Custom Ringing Second Line (Short/Short)			Ln3			$ 0.4841		
Custom Ringing Second Line (Short/Short/Long)			Ln3			$ 0.4841		
Custom Ringing Third Line (Short/Long/Short)				Ln3		$ 0.3871		

SGAT FEATURES

SOUTH DAKOTA

	Source	Source	Source	Source	Source	377C Investment	2124 Investment	Expense
	from: SCM Features Columns C+E	from: Inputs	from: SCM Cust Ring 2nd Columns C+E	from: SCM Cust Ring 3rd Columns C+E	from: SCM UCD Features Columns C+E	Total to: WINPC3 Investments Tab	Total to: WINPC3 Investments Tab	Total to: WINPC3 Investments Tab
Custom Ringing Third Line (Short/Short)				*Ln3*		$ 0.3871		
Custom Ringing Third Line (Short/Short/Long)				*Ln3*		$ 0.3871		
Data Call Protection (DMS 100)	*Ln15*					$ -		
Dir Sta Sel/Busy Lamp Fld per arrangement	*Ln22*					$ 68.4116		
Directed Call Pickup with Barge-in	*Ln18*					$ 4.2006		
Directed Call Pickup without Barge-in	*Ln19*					$ 1.0783		
Distinctive Ring/Distinctive Call Waiting	*Ln20+Ln21*					$ 0.5269		
Distinctive Ringing	*Ln21*					$ 0.5161		
EBS - Set Interface - per station line	*(a) + (b)*					$ 53.1929		
Executive Busy Overide	*Ln23*					$ 0.0559		
Expensive Route Warning Tone- per system	*Ln116*					$ -		
Facility Restriction Level - per system	*Ln97*					$ -		
Feature Display	*Ln72*					$ 0.0082		
Group Intercom	*Ln27*					$ 3.1957		
Hot Line - per line	*Ln85*					$ 2.1947		
Hunting: Multiposition Circular Hunting	*Ln36*					$ 7.6922		
Hunting: Multiposition Hunt Queuing	*Ln43*					$ 6.0076		
Hunting: Multiposition Series Hunting	*Ln36*					$ 7.6922		
Hunting: Multiposition with Announcement in Queue	*Ln16*					$ 121.7238		
Hunting: Multiposition with Music in Queue	*Ln37*					$ 41.4372		
Incoming Calls Barred	*Ln103*					$ 0.2774		
International Direct Dial Blocking	*Ln104*					$ 0.4088		
ISDN Short Hunt	*Ln79*					$ 19.5368		
Line Side Answer Supervision	*Ln69*					$ 0.7848		
Loudspeaker Paging - per trunk group	*Ln29*					$ 851.8901		
Make Busy Arrangements - per group	*Ln31*					$ 11.1794		
Make Busy Arrangements - per line	*(Ln31) * .25*					$ 2.7948		
Message Center - per main station line	*Ln119*					$ -		
Message Waiting Indication Audible/Visual	*(.9)Ln33+(.1)Ln34*					$ 2.0926		
Message Waiting Visual	*(.9)Ln33+(.1)Ln34*					$ 2.0926		
Music On Hold - per system	*(.6544)Ln38+(.3456)Ln80*					$ 887.5582		
Network Speed Call	*Ln40*					$ 0.0119		
Night Service Arrangement	*Ln47*					$ 0.0616		
Outgoing Calls Barred	*Ln105*					$ 0.0208		

SGAT FEATURES

SOUTH DAKOTA

	Source	Source	Source	Source	Source	377C Investment	2124 Investment	Expense
	from: SCM Features Columns C+E	from: Inputs	from: SCM Cust Ring 2nd Columns C+E	from: SCM Cust Ring 3rd Columns C+E	from: SCM UCD Features Columns C+E	Total to: WINPC3 Investments Tab	Total to: WINPC3 Investments Tab	Total to: WINPC3 Investments Tab
Outgoing Trunk Queuing	*Ln41*					$ 2.1620		
Privacy Release	*Ln86*					$ 0.1227		
Query Time	*Ln87*					$ 6.7333		
Speed Calling 1 Digit Controller	*Ln106*					$ 0.3525		
Speed Calling 1 Digit User	*Ln106*					$ 0.3525		
Speed Calling 1# List Individual	*Ln106*					$ 0.3525		
Speed Calling 2 Digit Controller	*Ln106*					$ 0.3525		
Speed Calling 2 Digit User	*Ln106*					$ 0.3525		
Speed Calling 2# List Individual	*Ln106*					$ 0.3525		
Speed Calling 30 Number	*Ln106*					$ 0.3525		
Speed Calling 8 Number	*Ln106*					$ 0.3525		
Station Camp-On Service - per main station	*Ln44*					$ 328.2528		
Station Dial Conferencing (6 Way)	*Ln45*					$ 63.5380		
Station Message Detail Recording (SMDR)		*G129,130,131*				$ 0.9941	$ 0.3882	$ 0.0524
Three Way Calling	*Ln107*					$ 9.9983		
Time and Date Display	*Ln73*					$ 4.1698		
Time of Day Control for ARS - per system	*Ln120*					$ -		
Time of Day NCOS Update	*Ln46*					$ 0.2182		
Time of Day Routing - per line	*Ln6*					$ 2.3259		
Toll Restriction Service	*Ln108*					$ 0.1984		
Trunk Answer Any Station	*Ln47*					$ 0.0616		
Trunk Verification from Designated Station	*Ln48*					$ -		
UCD in hunt group - per line	*Ln88*				*Ln3+Ln5+Ln6*	$ 317.5006		
UCD with Music After Delay	*Ln21+Ln107*				*Ln5+Ln6*	$ 209.2297		

	Investment
(a) = *Ln7+Ln14+Ln26+Ln27+Ln27+Ln35+Ln39+Ln62+ Ln63+Ln64+Ln65*	$ 21.7443
(b) = *Ln66+Ln67+Ln68+Ln69+Ln86+Ln87+Ln112+Ln113 Ln114+Ln115+Ln118*	$ 31.4487

	A	B	C	D	E	F
1	Investment					
2	STUDY	SGAT FEATURES				
3	DATE	7/12/01				
4	GROUP	10XXX Direct Dialed Blocking				
5	LOADED	SD	0.0280244223	0.	0.	377C
6	GROUP	Account Codes - per system				
7	LOADED	SD	291.5164018184	0.	0.	377C
8	GROUP	Attendant Access Line - per station line				
9	LOADED	SD	0.2288734671	0.	0.	377C
10	GROUP	Audible Message Waiting				
11	LOADED	SD	2.0926409385	0.	0.	377C
12	GROUP	Authorization Codes - per system				
13	LOADED	SD	123.5511749072	0.	0.	377C
14	GROUP	Auto Callback				
15	LOADED	SD	0.2751564397	0.	0.	377C
16	GROUP	Automatic Line				
17	LOADED	SD	0.	0.	0.	377C
18	GROUP	Automatic Route Selection - Common Equip. per system				
19	LOADED	SD	82.6717090483	0.	0.	377C
20	GROUP	Blocking of pay per call services				
21	LOADED	SD	1.1173713177	0.	0.	377C
22	GROUP	Bridging				
23	LOADED	SD	0.0157743712	0.	0.	377C
24	GROUP	Call Drop				
25	LOADED	SD	0.003399734	0.	0.	377C
26	GROUP	Call Exclusion - Automatic				
27	LOADED	SD	0.0000794368	0.	0.	377C
28	GROUP	Call Exclusion - Manual				
29	LOADED	SD	0.0000794368	0.	0.	377C
30	GROUP	Call Forward Don't Answer - All Calls				
31	LOADED	SD	2.2766267795	0.	0.	377C
32	GROUP	Call Forwarding Incoming Only				
33	LOADED	SD	0.2374924795	0.	0.	377C
34	GROUP	Call Forwarding Intra Group Only				

	A	B	C	D	E	F
35	LOADED	SD	0.2012343759	0.	0.	377C
36	GROUP	Call Forwarding Variable Remote				
37	LOADED	SD	1.4745886791	0.	0.	377C
38	GROUP	Call Forwarding: Busy Line (Expanded)				
39	LOADED	SD	0.7412461911	0.	0.	377C
40	GROUP	Call Forwarding: Busy Line (External)				
41	LOADED	SD	0.7412461911	0.	0.	377C
42	GROUP	Call Forwarding: Busy Line (External) Don't Answer				
43	LOADED	SD	3.0178729706	0.	0.	377C
44	GROUP	Call Forwarding: Busy Line (Overflow)				
45	LOADED	SD	0.7412461911	0.	0.	377C
46	GROUP	Call Forwarding: Busy Line (Overflow) Don't Answer				
47	LOADED	SD	3.0178729706	0.	0.	377C
48	GROUP	Call Forwarding: Busy Line (Programmable)				
49	LOADED	SD	0.9702226715	0.	0.	377C
50	GROUP	Call Forwarding: Busy Line/Don't Answer (Expanded)				
51	LOADED	SD	3.0178729706	0.	0.	377C
52	GROUP	Call Forwarding: Don't Answer				
53	LOADED	SD	2.2766267795	0.	0.	377C
54	GROUP	Call Forwarding: Don't Answer (Expanded)				
55	LOADED	SD	2.2766267795	0.	0.	377C
56	GROUP	Call Forwarding: Don't Answer (Programmable)				
57	LOADED	SD	2.051611409	0.	0.	377C
58	GROUP	Call Forwarding: Variable				
59	LOADED	SD	1.1059383117	0.	0.	377C
60	GROUP	Call Forwarding: Variable - no call complete option				
61	LOADED	SD	1.1059383117	0.	0.	377C
62	GROUP	Call Hold				
63	LOADED	SD	0.3011405483	0.	0.	377C
64	GROUP	Call Hold/3-Way/Call Transfer				
65	LOADED	SD	9.9983313625	0.	0.	377C
66	GROUP	Call Park (Basic - Store & Retrieve)				
67	LOADED	SD	0.6580491273	0.	0.	377C
68	GROUP	Call Pickup				

	A	B	C	D	E	F
69	LOADED	SD	0.2728391789	0.	0.	377C
70	GROUP	Call Transfer				
71	LOADED	SD	9.9983313625	0.	0.	377C
72	GROUP	Call Waiting Dial Originating				
73	LOADED	SD	0.3829630947	0.	0.	377C
74	GROUP	Call Waiting Indication - per timing state				
75	LOADED	SD	15.534011594	0.	0.	377C
76	GROUP	Call Waiting Originating				
77	LOADED	SD	0.7943254414	0.	0.	377C
78	GROUP	Call Waiting Terminating - All Calls				
79	LOADED	SD	1.5928266325	0.	0.	377C
80	GROUP	Call Waiting Terminating - Incoming Only				
81	LOADED	SD	1.5928266325	0.	0.	377C
82	GROUP	Call Waiting/ Cancel Call Waiting				
83	LOADED	SD	2.5506369239	0.	0.	377C
84	GROUP	Centrex Management System (CMS)				
85	LOADED	SD	0.0222822279	0.	0.	377C
86	LOADED	SD	1.1113405234	0.	0.	2124
87	COMMON	SD	0.352376663	0.	0.	
88	GROUP	Centrex Plus DID numbers per number				
89	LOADED	SD	1.5902039055	0.	0.	377C
90	GROUP	Centrex Plus to Centrex Plus				
91	LOADED	SD	210.7251591037	0.	0.	377C
92	GROUP	Centrex Plus to IC Carrier				
93	LOADED	SD	210.7251591037	0.	0.	377C
94	GROUP	Centrex Plus to PBX/Key Blocked				
95	LOADED	SD	210.7251591037	0.	0.	377C
96	GROUP	Centrex Plus to PBX/Key Non-Blocked				
97	LOADED	SD	210.7251591037	0.	0.	377C
98	GROUP	CFBL - All Calls				
99	LOADED	SD	0.7412461911	0.	0.	377C
100	GROUP	CFBL - Incoming Only				
101	LOADED	SD	0.7412461911	0.	0.	377C
102	GROUP	CFDA Incoming Only				

	A	B	C	D	E	F
103	LOADED	SD	0.3351238072	0.	0.	377C
104	GROUP	CLASS - Anonymous Call Rejection				
105	LOADED	SD	10.2158202889	0.	0.	377C
106	GROUP	CLASS - Call Waiting ID				
107	LOADED	SD	1.1873832237	0.	0.	377C
108	GROUP	CLASS - Calling Name & Number				
109	LOADED	SD	13.6549057054	0.	0.	377C
110	GROUP	CLASS - Calling Number Delivery				
111	LOADED	SD	1.1479255649	0.	0.	377C
112	GROUP	CLASS - Calling Number Delivery - Blocking				
113	LOADED	SD	10.7214278783	0.	0.	377C
114	GROUP	CLASS - Continuous Redial				
115	LOADED	SD	8.1995614607	0.	0.	377C
116	GROUP	CLASS - Last Call Return				
117	LOADED	SD	2.3009347446	0.	0.	377C
118	GROUP	CLASS - Priority Calling				
119	LOADED	SD	4.66044843	0.	0.	377C
120	GROUP	CLASS - Selective Call Forwarding				
121	LOADED	SD	4.1685989567	0.	0.	377C
122	GROUP	CLASS - Selective Call Rejection				
123	LOADED	SD	9.5496672791	0.	0.	377C
124	GROUP	Conference Calling - Meet Me				
125	LOADED	SD	565.0205993652	0.	0.	377C
126	GROUP	Conference Calling - Preset				
127	LOADED	SD	412.7092971802	0.	0.	377C
128	GROUP	Custom Ringing First Line (Short/Long/Short)				
129	LOADED	SD	0.5161474315	0.	0.	377C
130	GROUP	Custom Ringing First Line (Short/Short)				
131	LOADED	SD	0.5161474315	0.	0.	377C
132	GROUP	Custom Ringing First Line (Short/Short/Long)				
133	LOADED	SD	0.5161474315	0.	0.	377C
134	GROUP	Custom Ringing Second Line (Short/Long/Short)				
135	LOADED	SD	0.4841462778	0.	0.	377C
136	GROUP	Custom Ringing Second Line (Short/Short)				

	A	B	C	D	E	F
137	LOADED	SD	0.4841462778	0.	0.	377C
138	GROUP	Custom Ringing Second Line (Short/Short/Long)				
139	LOADED	SD	0.4841462778	0.	0.	377C
140	GROUP	Custom Ringing Third Line (Short/Long/Short)				
141	LOADED	SD	0.3871105314	0.	0.	377C
142	GROUP	Custom Ringing Third Line (Short/Short)				
143	LOADED	SD	0.3871105314	0.	0.	377C
144	GROUP	Custom Ringing Third Line (Short/Short/Long)				
145	LOADED	SD	0.3871105314	0.	0.	377C
146	GROUP	Data Call Protection (DMS 100)				
147	LOADED	SD	0.	0.	0.	377C
148	GROUP	Dir Sta Sel/Busy Lamp Fld per arrangement				
149	LOADED	SD	68.4115695953	0.	0.	377C
150	GROUP	Directed Call Pickup with Barge-in				
151	LOADED	SD	4.2006114765	0.	0.	377C
152	GROUP	Directed Call Pickup without Barge-in				
153	LOADED	SD	1.0782557071	0.	0.	377C
154	GROUP	Distinctive Ring/Distinctive Call Waiting				
155	LOADED	SD	0.5268572363	0.	0.	377C
156	GROUP	Distinctive Ringing				
157	LOADED	SD	0.5161474315	0.	0.	377C
158	GROUP	EBS - Set Interface - per station line				
159	LOADED	SD	53.1929456236	0.	0.	377C
160	GROUP	Executive Busy Overide				
161	LOADED	SD	0.0558968475	0.	0.	377C
162	GROUP	Expensive Route Warning Tone- per system				
163	LOADED	SD	0.	0.	0.	377C
164	GROUP	Facility Restriction Level - per system				
165	LOADED	SD	0.	0.	0.	377C
166	GROUP	Feature Display				
167	LOADED	SD	0.0082225431	0.	0.	377C
168	GROUP	Group Intercom				
169	LOADED	SD	3.1957319975	0.	0.	377C
170	GROUP	Hot Line - per line				

	A	B	C	D	E	F
171	LOADED	SD	2.1946523426	0.	0.	377C
172	GROUP	Hunting: Multiposition Circular Hunting				
173	LOADED	SD	7.6922480146	0.	0.	377C
174	GROUP	Hunting: Multiposition Hunt Queuing				
175	LOADED	SD	6.0076467469	0.	0.	377C
176	GROUP	Hunting: Multiposition Series Hunting				
177	LOADED	SD	7.6922480146	0.	0.	377C
178	GROUP	Hunting: Multiposition with Announcement in Queue				
179	LOADED	SD	121.7238379074	0.	0.	377C
180	GROUP	Hunting: Multiposition with Music in Queue				
181	LOADED	SD	41.4372428656	0.	0.	377C
182	GROUP	Incoming Calls Barred				
183	LOADED	SD	0.2774279132	0.	0.	377C
184	GROUP	International Direct Dial Blocking				
185	LOADED	SD	0.4088214472	0.	0.	377C
186	GROUP	ISDN Short Hunt				
187	LOADED	SD	19.5367593765	0.	0.	377C
188	GROUP	Line Side Answer Supervision				
189	LOADED	SD	0.7847536661	0.	0.	377C
190	GROUP	Loudspeaker Paging - per trunk group				
191	LOADED	SD	851.8900929842	0.	0.	377C
192	GROUP	Make Busy Arrangements - per group				
193	LOADED	SD	11.179369092	0.	0.	377C
194	GROUP	Make Busy Arrangements - per line				
195	LOADED	SD	2.794842273	0.	0.	377C
196	GROUP	Message Center - per main station line				
197	LOADED	SD	0.	0.	0.	377C
198	GROUP	Message Waiting Indication Audible/Visual				
199	LOADED	SD	2.0926409385	0.	0.	377C
200	GROUP	Message Waiting Visual				
201	LOADED	SD	2.0926409385	0.	0.	377C
202	GROUP	Music On Hold - per system				
203	LOADED	SD	887.5581764893	0.	0.	377C
204	GROUP	Network Speed Call				

	A	B	C	D	E	F
205	LOADED	SD	0.011939134	0.	0.	377C
206	GROUP	Night Service Arrangement				
207	LOADED	SD	0.0615576682	0.	0.	377C
208	GROUP	Outgoing Calls Barred				
209	LOADED	SD	0.020807098	0.	0.	377C
210	GROUP	Outgoing Trunk Queuing				
211	LOADED	SD	2.162022579	0.	0.	377C
212	GROUP	Privacy Release				
213	LOADED	SD	0.1227192879	0.	0.	377C
214	GROUP	Query Time				
215	LOADED	SD	6.733289957	0.	0.	377C
216	GROUP	Speed Calling 1 Digit Controller				
217	LOADED	SD	0.3525432571	0.	0.	377C
218	GROUP	Speed Calling 1 Digit User				
219	LOADED	SD	0.3525432571	0.	0.	377C
220	GROUP	Speed Calling 1# List Individual				
221	LOADED	SD	0.3525432571	0.	0.	377C
222	GROUP	Speed Calling 2 Digit Controller				
223	LOADED	SD	0.3525432571	0.	0.	377C
224	GROUP	Speed Calling 2 Digit User				
225	LOADED	SD	0.3525432571	0.	0.	377C
226	GROUP	Speed Calling 2# List Individual				
227	LOADED	SD	0.3525432571	0.	0.	377C
228	GROUP	Speed Calling 30 Number				
229	LOADED	SD	0.3525432571	0.	0.	377C
230	GROUP	Speed Calling 8 Number				
231	LOADED	SD	0.3525432571	0.	0.	377C
232	GROUP	Station Camp-On Service - per main station				
233	LOADED	SD	328.2528266907	0.	0.	377C
234	GROUP	Station Dial Conferencing (6 Way)				
235	LOADED	SD	63.5379887829	0.	0.	377C
236	GROUP	Station Message Detail Recording (SMDR)				
237	LOADED	SD	0.9941	0.	0.	377C
238	LOADED	SD	0.3882049027	0.	0.	2124

	A	B	C	D	E	F
239	COMMON	SD	0.0523683155	0.	0.	
240	GROUP	Three Way Calling				
241	LOADED	SD	9.9983313625	0.	0.	377C
242	GROUP	Time and Date Display				
243	LOADED	SD	4.1697935377	0.	0.	377C
244	GROUP	Time of Day Control for ARS - per system				
245	LOADED	SD	0.	0.	0.	377C
246	GROUP	Time of Day NCOS Update				
247	LOADED	SD	0.2181604952	0.	0.	377C
248	GROUP	Time of Day Routing - per line				
249	LOADED	SD	2.3258944672	0.	0.	377C
250	GROUP	Toll Restriction Service				
251	LOADED	SD	0.1983609708	0.	0.	377C
252	GROUP	Trunk Answer Any Station				
253	LOADED	SD	0.0615576682	0.	0.	377C
254	GROUP	Trunk Verification from Designated Station				
255	LOADED	SD	0.	0.	0.	377C
256	GROUP	UCD in hunt group - per line				
257	LOADED	SD	317.5006244359	0.	0.	377C
258	GROUP	UCD with Music After Delay				
259	LOADED	SD	209.2297150655	0.	0.	377C

	A	B
1	Parameter	
2	SD	
3	7	
4	4	
5	Monthly	12
6	Yes	
7	No	
8		
9	11	
10	5453	

	A	B	C	D	E	F	G	H	I	J	K	L	M
1	ACFIN												
2	00SD02E												
3	377C	DEPR-AVG	COM-AVG	IT-AVG	MTNC-TOT	RTU-SWIT	ADVAL	BLDG	LAND	PRODMAN	SALESEXP	ADVER	BF
4	20C	DEPR-AVG	COM-AVG	IT-AVG	MTNC-TOT	RTU-SWIT	ADVAL	BLDG	LAND	PRODMAN	SALESEXP	ADVER	BF
5	110C	DEPR-AVG	COM-AVG	IT-AVG	MTNC-TOT	RTU-SWIT	ADVAL	BLDG	LAND	PRODMAN	SALESEXP	ADVER	BF
6	2124	DEPR-AVG	COM-AVG	IT-AVG	MTNC-TOT	RTU-SWIT	ADVAL	BLDG	LAND	PRODMAN	SALESEXP	ADVER	BF

	N	O	P	Q	R	S	T	U	V	W	X	Y	Z
1													
2													
3	NTWKOP	NTWKST	GENLST	COMPTR	UNCOLL	ACCNT	HREXP	INTAN	EXEC	PLAN	EXTERN	INFOR	LEGAL
4	NTWKOP	NTWKST	GENLST	COMPTR	UNCOLL	ACCNT	HREXP	INTAN	EXEC	PLAN	EXTERN	INFOR	LEGAL
5	NTWKOP	NTWKST	GENLST	COMPTR	UNCOLL	ACCNT	HREXP	INTAN	EXEC	PLAN	EXTERN	INFOR	LEGAL
6	NTWKOP	NTWKST	GENLST	COMPTR	UNCOLL	ACCNT	HREXP	INTAN	EXEC	PLAN	EXTERN	INFOR	LEGAL

	AA	AB	AC
1			
2			
3	PROCR	RDEXP	GENL
4	PROCR	RDEXP	GENL
5	PROCR	RDEXP	GENL
6	PROCR	RDEXP	GENL

	A	B	C	D	E	F	G	H	I	J	K	L	M
1	ACFOUT	Factors For: Interconnection											
2	*-Run Done With Database Vintage: 00SD02E, Dated: 02/15/01*												
3	*-Wholesale Cost Program (TELRIC) Data Base released 02/01 (00SD02E).*												
4	*-Factors loaded from Factors Model (Expense Module), Version 00V2.*												
5	*-CAPITAL RECOVERY factors released 01/01 and based on 10.14% Cost*												
6	*Of Money. No 1-10 year factors developed.*												
7	*-MAINTENANCE factors released 01/01.*												
8	*-RTU factors released 02/01.*												
9	*-AD VALOREM Tax released 01/01.*												
10	*-DIRECTLY ASSIGNED expense factors released 01/01.*												
11	*-BUSINESS FEES released 01/01.*												
12	*-COMMON Expense released 01/01.*												
13	*-TOTAL INSTALLED FACTORS (TIF) released 01/01.*												
14	*-POWER investment factors released 01/01.*												
15	*-SALES TAX released 01/01.*												
16	*-TELCO Engineering factors released 01/01.*												
17	*-INTEREST DURING CONSTRUCTION released 01/01.*												
18	*-LAND AND BUILDING factors released 01/01.*												
19	*-DIRECTLY ATTRIBUTABLE expense factors released 01/01.*												
20	*-SALES EXPENSE factor released 01/01.*												
21	*-PRODUCT MANAGEMENT factor released 01/01.*												
22	*-BILLING & COLLECTION factor released 01/01.*												
23	*-PROVISIONING factors released 01/01.*												
24	*-TELEPHONE PLANT INDEX released 01/01.*												
25	*-STRUCTURE RATIO released 01/01.*												

	A	B	C	D	E	F	G	H	I	J	K	L	M	N
37														
38	State:	South Dakota												
39														
40	**ACCOUNTS**	**DEPR-AVG**	**COM-AVG**	**IT-AVG**	**MTNC-TOT**	**RTU-SWIT**	**ADVAL**	**BLDG**	**LAND**	**PRODMAN**	**SALESEXP**	**ADVER**	**BF**	**NTWKOP**
41	377C	0.108910	0.045445	0.017186	0.020939	0.000000	0.008613	0.053700	0.001400	0.025565	0.009225	0.000000	0.002025	0.040880
42	20C	0.000000	0.096506	0.036495	0.022353	0.000000	0.008613	0.000000	0.000000	0.025565	0.009225	0.000000	0.002025	0.040880
43	110C	0.025821	0.074869	0.028313	0.022353	0.000000	0.008613	0.000000	0.000000	0.025565	0.009225	0.000000	0.002025	0.040880
44	2124	0.164850	0.047620	0.018008	0.000000	0.000000	0.008613	0.000000	0.000000	0.025565	0.009225	0.000000	0.002025	0.040880

	O	P	Q	R	S	T	U	V	W	X	Y	Z	AA	AB
37														
38														
39														
40	NTWKST	GENLST	COMPTR	UNCOLL	ACCNT	HREXP	INTAN	EXEC	PLAN	EXTERN	INFOR	LEGAL	PROCR	RDEXP
41	0.015364	0.069508	0.034714	0.000401	0.008839	0.008145	0.002091	0.007805	0.000580	0.013029	0.057009	0.006148	0.002359	0.000036
42	0.015364	0.069508	0.034714	0.000401	0.008839	0.008145	0.002091	0.007805	0.000580	0.013029	0.057009	0.006148	0.002359	0.000036
43	0.015364	0.069508	0.034714	0.000401	0.008839	0.008145	0.002091	0.007805	0.000580	0.013029	0.057009	0.006148	0.002359	0.000036
44	0.015364	0.069508	0.034714	0.000401	0.008839	0.008145	0.002091	0.007805	0.000580	0.013029	0.057009	0.006148	0.002359	0.000036

	AC	AD
37		
38		
39		
40	GENL	
41	0.015212	
42	0.015212	
43	0.015212	
44	0.015212	

Section 3

Source Data

Year of Investments: 2000

FEATURE DESCRIPTION	FEATURE INPUT DESCRIPTION	FEATURE INPUT VALUE
BASIC CENTRON		
Dial 0	Busy Hour Dial 0 Call Attempts per Dial 0 Line	0.5800
BASIC CENTRON		
Direct Inward Dialing	Busy Hour DID Call Attempts per DID Line	1.4560
CENTRON		
Automatic Route Selection - Circuit Switched Voice - Time of Day Routing	Busy Hour Automatic Route Selection Attempts per ARS Line	1.0000
CENTRON		
Call Forward - Reason Display	Busy Hour Terminating CF-RD Call Attempts per CF-RD Line	0.3080
CENTRON		
Called Name Display - Customer Activated	Busy Hour Activations per Calling Name Delivery Line	0.0001
Called Name Display - Customer Activated	BH Calling Name Delivery Term. Call Att's per CNAMD Line	1.1200
Called Name Display - Customer Activated	Busy Hour Deactivations per Calling Name Delivery Line	0.0001
Called Name Display - Customer Activated	Percent of SW2 Lines with CND or BCLID or MWI or CNAMD	25.0000
CENTRON		
Call Waiting - Originating	Busy Hour CW-Originating Call Attempts per CW-Originating Line	0.0750
CENTRON		
Call Waiting - Terminating	Busy Hour CW-Terminating Call Attempts per CW-Terminating Line	0.1500
CENTRON		
Data Call Protection	None	
CENTRON		
Dial Call Waiting	Busy Hour Dial Call Waiting Call Attempts per DCW Line	0.0075
CENTRON		
Distinctive Call Waiting	Busy Hour Distinctive CW Term. Call Attempts per DCWT Line	0.0010
CENTRON		
Distinctive Ringing	Busy Hour Term. Call Attempts per Line with Distinctive Ringing	0.5000
Distinctive Ringing	Percent of Term. Call Attempts that get Distinctive Ringing	100.0000
CENTRON		
DSS - Busy Lamp Field for Business Set	Busy Hour DSS-BLF Call Attempts per Line	52.0000
CENTRON		
Executive Busy Override - Originator	Busy Hour Executive Busy Override - Orig. Call Att. per EBO Line	0.0100
CENTRON		
Expensive Route Warning Tone for ARS	Busy Hour ERWT Activations per Automatic Route Selection Line	30.0000
CENTRON		
Facility Restriction Level Screening	Busy Hour FRL Screening Activations per FRL Screening Line	60.0000
CENTRON		
Fast Transfer for MBS	Busy Hour Fast Transfer Attempts per Fast Transfer Line	0.2200
CENTRON		
Group Intercom - All Calls	Busy Hour GIC-ALL Call Attempts per Line	0.5000
CENTRON		
Group Intercom - Inter GIC Call	Busy Hour Dialed Intercom Attempts per Dialed Intercom Line	0.5000
CENTRON		
Loudspeaker Paging - Analog Trunk	BH Terminating Call Attempts per Loudspeaker Paging Analog Trunk	23.0000
Loudspeaker Paging - Analog Trunk	Loudspeaker Paging Analog Trunk or Ofc. Holding Time (CCS/Call)	0.0870
CENTRON		

Year of Investments: 2000

FEATURE DESCRIPTION	FEATURE INPUT DESCRIPTION	FEATURE INPUT VALUE
Make Set Busy - Intragroup	Busy Hour MSB All Call Attempts per MSB Line	2.0000
CENTRON		
Message Waiting Indication with SS7	Busy Hour MWI Activations per Message Waiting Indication Line	0.0720
CENTRON		
Message Waiting Set	Busy Hour Message Waiting Retrieval Attempts per MWS Set	0.5000
Message Waiting Set	Busy Hour Message Waiting Call Attempts per MWS Set	0.5000
CENTRON		
Music On Hold - Digital Trunk	Avg. number of Lines within Group (for $/Line not $/System)	10.0000
Music On Hold - Digital Trunk	Busy Hour Music On Hold Attempts per MOH Line/System	134.0000
CENTRON		
Music On Hold for P-Phones	Busy Hour Music On Hold Attempts per MOH Line	0.0010
Music On Hold for P-Phones	Average Office Holding Time (CCS per Call)	1.2000
CENTRON		
Network Speed Call	Busy Hour Network Speed Call Attempts per NSC Line	0.0200
CENTRON		
Station Camp On for Meridian Business Sets	Busy Hour Camp On Call Attempts per Camp On Line	10.0000
Station Camp On for Meridian Business Sets	Average Office Holding Time (CCS per Call)	1.2000
POTS		
Three Way Calling	Busy Hour 3WC Call Attempts per 3WC Line	0.1575
Three Way Calling	3WC or Office Holding Time (CCS per Call)	1.6000
CENTRON		
Time of Day NCOS	Busy Hour TOD - NCOS Term. Call Attempts Line	0.6700
CENTRON		
Trunk Answer Any Station	Busy Hour Trunk Answer Any Station Call Attempts per TAAS Line	0.0100
CENTRON		
Trunk Verification From a Designated Station	None	
EBS		
Business Set Call Forward on a per Key Basis	Busy Hour Activations per CFK Line	0.0358
Business Set Call Forward on a per Key Basis	Busy Hour CFK Call Attempts per CFK Line	0.1040
Business Set Call Forward on a per Key Basis	Busy Hour Deactivations per CFK Line	0.0358
EBS		
Business Set Inspect Key	Busy Hour Inspect Attempts per Inspect Line	0.0010
EBS		
Key Short Hunt	Busy Hour Key Short Hunt Term. Call Attempts per EBS Line	0.5000
EBS		
Multiple Executive Message Waiting Keys per DN	Busy Hour Mult Exec Msg Wtg Key Call Attempts per DN Line	0.5000
EBS		
Origination/Termination Line Select - Idle Line Select	Busy Hour Originating Line Select Attempts per DN Line	1.1200
EBS		
Origination/Termination Line Select - Incoming Call Select	Busy Hour Terminating Call Select Attempts per DN Line	0.9600
EBS		
Origination/Termination Line Select - No Line Select	Busy Hour Terminating No Line Select Attempts per DN Line	1.1200
FCC		
Calling Number Delivery (ICLID) - Permanent	Busy Hour CND Term. Call Attempts per CND Line	0.9600
Calling Number Delivery (ICLID) - Permanent	Percent of SW2 Lines with CND or BCLID or MWI or CNAMD	25.0000

Year of Investments: 2000

FEATURE DESCRIPTION	FEATURE INPUT DESCRIPTION	FEATURE INPUT VALUE
ISDN FEATURES		
System Music On Hold - Digital Trunk	Avg. number of Lines within Group (for $/Line not $/System)	1.0000
System Music On Hold - Digital Trunk	Busy Hour System Music On Hold Attempts per SMOH Line/System	134.0000
ISDN FEATURES		
Automatic Callback Calling/Ring Again	Busy Hour Ring Again Call Attempts per Ring Again Line	0.0010
Automatic Callback Calling/Ring Again	Busy Hour Ring Again Deactvations per Ring Again Line	0.0001
MODEL		
Hot Line	Busy Hour Hot Line Attempts per Line	1.0000
MODEL		
Account Codes	Busy Hour Account Code Call Attempts per Line	155.0000
MODEL		
Authorization Codes	Busy Hour Authorization Code Call Attempts per Line	40.0000
MODEL		
Privacy Release	Busy Hour Privacy Release Call Attempts per MADN SCA Private Line	0.0100
Privacy Release	Holding time per Privacy Release Call	1.2000
Privacy Release	Percentage of Calls that Bridge after PR Activated	10.0000
MODEL		
Query Time	Busy Hour Activations per Query Time Call	1.2000
Query Time	Busy Hour Query Time Call Attempts per	0.0500
MODEL		
Uniform Call Distribution	Busy Hour per UCD Call Attempts per UCD Line	12.2181
TRUNK		
Digital Private Facilities Acc-Origination Ofc (L-T)	BH Originating Private Facility Access Att's/Private Fac Trunk	5.5400
Digital Private Facilities Acc-Origination Ofc (L-T)	Number of Digits in Private Facility Access Code	3.0000
Digital Private Facilities Acc-Origination Ofc (L-T)	Average Number of Digits Dialed after PF Access Code	6.5000
Digital Private Facilities Acc-Origination Ofc (L-T)	Private Facility Access or Office Holding Time (CCS per Call)	1.8000
Digital Private Facilities Acc-Origination Ofc (L-T)	Average Number of Outpulsed Digits Dialed after PF Access Code	0.0000
TRUNK		
Digital Private Facilities Acc-Termination Ofc (T-L)	BH Terminating Private Facility Access Att's/Private Fac Trunk	5.5400
Digital Private Facilities Acc-Termination Ofc (T-L)	Private Facility Access or Office Holding Time (CCS per Call)	1.8000
Digital Private Facilities Acc-Termination Ofc (T-L)	Average Number of Digits Inpulsed to Terminating Office	6.5800
POTS		
Speed Call Long - Customer Changeable	Busy Hour Activations per SCL Line	0.0001
Speed Call Long - Customer Changeable	Busy Hour Speed Call Attempts per SCL Line	0.0703
POTS		
Call Forwarding-Busy Line - IEO Customer NonChangeable	Busy Hour IEO CF-BL Call Attempts per IEO CF-BL Line	0.1500
POTS		
Call Forwarding-Don't Answer: IEO Customer NonChangeable	Busy Hour IEO CF-DA Call Attempts per IEO CF-DA Line	0.2821
CENTRON		
Call Hold	Busy Hour Call Hold Call Attempts per Call Hold Line	0.0180
CENTRON		
Call Park Retrieve	Busy Hour Call Park Call Attempts per Call Park Line	0.0100
CENTRON		
Call Park Store	Busy Hour Call Park Call Attempts per Call Park Line	0.0100
Call Park Store	Call Park or Office Holding Time (CCS per Call)	1.2000
CENTRON		

Year of Investments: 2000

FEATURE DESCRIPTION	FEATURE INPUT DESCRIPTION	FEATURE INPUT VALUE
Call Pickup	Busy Hour Call Pickup Call Attempts per Call Pickup Line	0.0328
CENTRON		
Message Waiting Indication Audible/Visual	Busy Hour MWI Activations per Message Waiting Indication Line	0.2145
CLASS		
Call Waiting ID (Name & Number with SS7)	Busy Hour Term. Call Attempts per Calling Name Delivery Line	0.0800
CLASS		
Calling Number Delivery - IEO Permanent	Busy Hour IEO CND Term. Call Attempts per IEO CND Line	1.0000
Calling Number Delivery - IEO Permanent	Percent of SW2 Lines with CND or BCLID or MWI or CNAMD	10.1936
CLASS		
Calling Number Delivery Blocking - IAO	Busy Hour CNDB Call Attempts per CNDB Line	1.2000
CLASS		
Calling Number Delivery Blocking - IEO	Busy Hour CNDB Call Attempts per CNDB Line	1.2000
CLASS		
Continuous Redial - IAO	Busy Hour IAO Continuous Redial Term. Call Att's per IAO CR Line	0.0325
Continuous Redial - IAO	Percent Continuous Redial Calls that are Delay Processed	100.0000
Continuous Redial - IAO	Percent of Working Lines with Cont. Redial or Last Call Return	5.0000
CLASS		
Continuous Redial - IEO	Busy Hour IEO Continuous Redial Term. Call Att's per IEO CR Line	0.0759
Continuous Redial - IEO	Percent Continuous Redial Calls that are Delay Processed	100.0000
Continuous Redial - IEO	Percent of Working Lines with Cont. Redial or Last Call Return	5.0000
CLASS		
Last Call Return - IAO	Busy Hour IAO Last Call Return Term. Call Att's per IAO LCR Line	0.0009
Last Call Return - IAO	Percent Last Call Return Calls that are Delay Processed	17.0000
Last Call Return - IAO	Percent of Working Lines with Cont. Redial or Last Call Return	5.0000
CLASS		
Last Call Return - IEO	Busy Hour IEO Last Call Return Term. Call Att's per IEO LCR Line	0.0022
Last Call Return - IEO	Percent Last Call Return Calls that are Delay Processed	17.0000
Last Call Return - IEO	Percent of Working Lines with Cont. Redial or Last Call Return	5.0000
CLASS		
Priority Calling	Busy Hour Screen List Editing Accesses	0.0500
Priority Calling	Busy Hour Terminating Call Attempts per Line with Priority Call	3.0000
Priority Calling	Busy Hour Priority Call Terminations per Priority Call Line	0.1000
Priority Calling	Percent of SW1 Lines with Auto Customer Station Rearrangement	0.0001
Priority Calling	Percent of Lines with Priority Call	1.5000
Priority Calling	Percent of SW1 Lines with Remote Activation	3.0000
Priority Calling	Percent of Lines with Selective Call Acceptance	0.0000
Priority Calling	Percent of Lines with Selective Call Forwarding	1.0000
Priority Calling	Pct. of All Lines with either Selective Call Rejection or UCR	3.3500
Priority Calling	Screen List Editing Holding Time (CCS per Call)	3.0000
Priority Calling	Percent of Screen List Editing Additions that are Interoffice	70.0000
CLASS		
Selective Call Forwarding	Busy Hour Screen List Editing Accesses	0.0500
Selective Call Forwarding	Busy Hour Terminating Call Attempts per Line with SCF	3.0000
Selective Call Forwarding	Busy Hour SCF Calls Forwarded/Line with SCF	0.1000
Selective Call Forwarding	Percent of SW1 Lines with Auto Customer Station Rearrangement	0.0000
Selective Call Forwarding	Percent of Lines with Priority Call	1.5000
Selective Call Forwarding	Percent of SW1 Lines with Remote Activation	3.0000
Selective Call Forwarding	Percent of Lines with Selective Call Acceptance	0.0001
Selective Call Forwarding	Percent of Lines with Selective Call Forwarding	1.0000
Selective Call Forwarding	Percent of Lines with Selective Call Rejection	3.3500
Selective Call Forwarding	Screen List Editing Holding Time (CCS per Call)	3.0000
Selective Call Forwarding	Percent of Screen List Editing Additions that are Interoffice	70.0000

Year of Investments: 2000

FEATURE DESCRIPTION	FEATURE INPUT DESCRIPTION	FEATURE INPUT VALUE
CLASS		
Selective Call Rejection	Busy Hour Screen List Editing Accesses	0.0500
Selective Call Rejection	Busy Hour Terminating Call Attempts per Line with SCR	3.0000
Selective Call Rejection	Busy Hour Call Rejections per Line with SCR	0.1000
Selective Call Rejection	Percent of SW1 Lines with Auto Customer Station Rearrangement	0.0000
Selective Call Rejection	Percent of Lines with Priority Call	1.5000
Selective Call Rejection	Percent of SW1 Lines with Remote Activation	3.0000
Selective Call Rejection	Percent of Lines with Selective Call Acceptance	0.0000
Selective Call Rejection	Percent of Lines with Selective Call Forwarding	1.0000
Selective Call Rejection	Pct. of All Lines with either Selective Call Rejection or UCR	3.3500
Selective Call Rejection	Screen List Editing Holding Time (CCS per Call)	3.0000
Selective Call Rejection	Percent of Screen List Editing Additions that are Interoffice	70.0000
CLASS		
Unidentified Caller Rejection - Acceptance & Rejection	Busy Hour Activations per UCR Line	0.0100
Unidentified Caller Rejection - Acceptance & Rejection	Busy Hour Terminating Call Attempts per Line with UCR	3.0000
Unidentified Caller Rejection - Acceptance & Rejection	Busy Hour Deactivations per UCR Line	0.0010
Unidentified Caller Rejection - Acceptance & Rejection	Busy Hour Call Rejections per Line with UCR	0.1000
Unidentified Caller Rejection - Acceptance & Rejection	Average Number of UCR in Office	5204.0000
POTS		
Call Waiting	Busy Hour Call Waiting Call Attempts per CW Line	0.1500
POTS		
Cancel Call Waiting	Busy Hour Cancel Call Waiting Call Attempts per CCW Line	0.1500
POTS		
Call Forwarding-Busy Line - IAO Customer Changeable	Busy Hour Activations per IAO CF-BL Line	0.0110
Call Forwarding-Busy Line - IAO Customer Changeable	Busy Hour IAO CF-BL Call Attempts per IAO CF-BL Line	0.0213
Call Forwarding-Busy Line - IAO Customer Changeable	Busy Hour Deactivations per IAO CF-BL Line	0.0077
POTS		
Call Forwarding-Busy Line - IEO Customer Changeable	Busy Hour Activations per IEO CF-BL Line	0.0110
Call Forwarding-Busy Line - IEO Customer Changeable	Busy Hour IEO CF-BL Call Attempts per IEO CF-BL Line	0.0213
Call Forwarding-Busy Line - IEO Customer Changeable	Busy Hour Deactivations per IEO CF-BL Line	0.0077
POTS		
Call Forwarding-Don't Answer: IAO Customer Changeable	Busy Hour Activations per IAO CF-DA Line	0.0076
Call Forwarding-Don't Answer: IAO Customer Changeable	Busy Hour IAO CF-DA Call Attempts per IAO CF-DA Line	0.0831
Call Forwarding-Don't Answer: IAO Customer Changeable	Busy Hour Deactivations per IAO CF-DA Line	0.0077
POTS		
Call Forwarding-Don't Answer: IEO Customer Changeable	Busy Hour Activations per IEO CF-DA Line	0.0076
Call Forwarding-Don't Answer: IEO Customer Changeable	Busy Hour IEO CF-DA Call Attempts per IEO CF-DA Line	0.0831
Call Forwarding-Don't Answer: IEO Customer Changeable	Busy Hour Deactivations per IEO CF-DA Line	0.0043
POTS		
Call Forwarding Variable - IAO (Use with Remote Activation)	Busy Hour IAO CFV Call Attempts per IAO CFV Line	0.0911
POTS		
Call Forwarding Variable - IAO Customer Changeable	Busy Hour Activations per IAO CFV Line	0.0112
Call Forwarding Variable - IAO Customer Changeable	Busy Hour IAO CFV Call Attempts per IAO CFV Line	0.0911
Call Forwarding Variable - IAO Customer Changeable	Busy Hour Deactivations per IAO CFV Line	0.0043
POTS		
Call Forwarding Variable - IEO (Use with Remote Activation)	Busy Hour IEO CFV Call Attempts per IEO CFV Line	0.0911
POTS		
Call Forwarding Variable - IEO Customer Changeable	Busy Hour Activations per IEO CFV Line	0.0112
Call Forwarding Variable - IEO Customer Changeable	Busy Hour IEO CFV Call Attempts per IEO CFV Line	0.0911
Call Forwarding Variable - IEO Customer Changeable	Busy Hour Deactivations per IEO CFV Line	0.0043

Year of Investments: 2000

FEATURE DESCRIPTION	FEATURE INPUT DESCRIPTION	FEATURE INPUT VALUE
POTS		
Distinctive Ringing	Busy Hour Term. Call Attempts per Line with Distinctive Ringing	2.0000
Distinctive Ringing	Percent of Term. Call Attempts that get Distinctive Ringing	50.0000
Distinctive Ringing	Number of Secondary Phone Numbers	1.0000
CLASS		
Calling Name and Number (SS7 included)	Busy Hour Term. Call Attempts per Line	0.9200
CENTRON		
10XXX Split Blocking	Busy Hour 10XXX Split Blocking Attempts per 10XXX SB	0.0500
POTS		
Block Pay per Use Features	Percent of All Lines with Block Pay per Use Feature	5.0000
CENTRON		
MADN Bridging - 3WC	Busy Hour MADN Bridging Call Attempts per MADN Line	0.0014
MADN Bridging - 3WC	MADN Bridging or Office Holding Time (CCS per Call)	0.3600
ISDN BASIC		
Auto Drop	Busy Hour Auto Drop Attempts per Auto Drop Line	0.0048
ISDN MADN		
MADN - Automatic Exclusion	Busy Hour Automatic Exclusion Call Att's per Auto Exclusion Line	0.0001
ISDN MADN		
MADN - Manual Exclusion	Busy Hour Manual Exclusion Call Att's per Manual Exclusion Line	0.0001
ISDN FEATURES		
Call Forwarding - Incoming Only	Busy Hour Call Attempts	0.0500
ISDN FEATURES		
Call Forwarding Intra Group Only (Use with Remote Activation Feature)	Busy Hour Call Attempts	0.0110
ISDN FEATURES		
Call Forwarding Variable - IAO (Use with Remote Activation)	Busy Hour IAO CFV Call Attempts per IAO CFV Line	0.0911
ISDN FEATURES		
Call Forwarding-Don't Answer: Incoming Only	Busy Hour IAO CF-DA Call Attempts per IAO CF-DA Line	0.0900
CENTRON		
Directed Call Pickup with Barge-in	Busy Hour DCPU-BI Call Attempts per DCPU-BI Line	0.0750
Directed Call Pickup with Barge-in	DCPU-BI or Office Holding Time (CCS per Call)	1.6000
CENTRON		
Directed Call Pickup without Barge-in	Busy Hour Directed Call Pickup Call Attempts per DCPU Line	0.1500
ISDN BASIC		
Feature Display	Busy Hour Feature Display Attempts per Feature Display Line	0.0025
CENTRON		
Queuing for MUPH	Busy Hour MUPH Queuing Attempts per MUPH Line/System	0.6109
CENTRON		
Multiline Hunt	Busy Hour Multi-Line Hunt Term. Call Attempts per MLH Line	12.2181
CENTRON		
Delayed Announcements for MUPH Queue	Avg. number of Lines within Group (for $/Line not $/System)	10.0000
Delayed Announcements for MUPH Queue	BH Delayed Announcement Call Attempts per MUPH Queue System/Line	0.6109
CENTRON		
Music in Queue - Multi-Position Hunt Group	Avg. number of Lines within Group (for $/Line not $/System)	10.0000
Music in Queue - Multi-Position Hunt Group	Busy Hour Music In Queue - MUPH Attempts per MUPH Line	0.6109

Year of Investments: 2000

FEATURE DESCRIPTION	FEATURE INPUT DESCRIPTION	FEATURE INPUT VALUE
POTS		
Incoming Calls Barred	Busy Hour Incoming Call Attempts per Restricted Line	0.1000
POTS		
International Direct Dial Blocking	Busy Hour International Dial Attempts per International Direct Dial Blocking Line	0.0500
FCC		
Answer Supervision - Line	Busy Hour Answer Supervision Call Attempts per Line	2.0000
POTS		
Outgoing Calls Barred	Busy Hour Outgoing Call Attempts per Restricted Line	0.0075
CENTRON		
Outgoing Trunk Queuing Without Recorded Announcement	Busy Hour Outgoing Trunk Queuing Attempts per Trunk	0.6109
POTS		
Toll Restriction	Busy Hour Toll Restricted Attempts per Toll Restriction Line	0.0715
ISDN FEATURES		
Key Short Hunt	Busy Hour Key Short Hunt Call Attempts per Key Short Hunt Group	5.0000
ISDN BASIC		
Time and Date	Busy Hour Time & Date Attempts per Time & Date Line	5.0000
CENTRON		
Meet-Me Conference Large	Number of Conferees on Call	30.0000
Meet-Me Conference Large	Busy Hour Meet-Me Conference Call Attempts per Line	0.0450
Meet-Me Conference Large	Meet-Me Conference or Office Holding Time (CCS per Call)	15.6670
CENTRON		
Station Dial Conferencing	Number of Conferees on Call	6.0000
Station Dial Conferencing	Busy Hour Station Dial Conference Call Attempts per SDC Line	0.0300
Station Dial Conferencing	Station Dial Conference or Office Holding Time (CCS per Call)	15.6670
CENTRON		
Preset Conference	Number of Conferees on Call	25.0000
Preset Conference	Busy Hour Preset Conference Call Attempts per PSC Line	0.0400
Preset Conference	Preset Conference or Office Holding Time (CCS per Call)	15.6670

Year of Investments: 2000

FEATURE DESCRIPTION	FEATURE INPUT DESCRIPTION	FEATURE INPUT VALUE
POTS		
Distinctive Ringing	Busy Hour Term. Call Attempts per Line with Distinctive Ringing	1.4000
Distinctive Ringing	Number of Secondary Phone Numbers	2.0000
Distinctive Ringing	Percent of Term. Call Attempts that get Distinctive Ringing	67.0000

Year of Investments: 2000

FEATURE DESCRIPTION	FEATURE INPUT DESCRIPTION	FEATURE INPUT VALUE
POTS		
Distinctive Ringing	Busy Hour Term. Call Attempts per Line with Distinctive Ringing	1.5000
Distinctive Ringing	Number of Secondary Phone Numbers	3.0000
Distinctive Ringing	Percent of Term. Call Attempts that get Distinctive Ringing	75.0000

Year of Investments: 2000

FEATURE DESCRIPTION	FEATURE INPUT DESCRIPTION	FEATURE INPUT VALUE
CENTRON		
Message Waiting Indication with SS7	Busy Hour MWI Activations per Message Waiting Indication Line	0.2145
CENTRON		
Music in Queue - Multi-Position Hunt Group	Avg. number of Lines within Group (for $/Line not $/System)	20.0000
Music in Queue - Multi-Position Hunt Group	Busy Hour Music In Queue - MUPH Attempts per MUPH Line	12.2181
CENTRON		
Queuing for MUPH	Busy Hour MUPH Queuing Attempts per MUPH Line/System	12.2181
CENTRON		
Delayed Announcements for MUPH Queue	Avg. number of Lines within Group (for $/Line not $/System)	20.0000
Delayed Announcements for MUPH Queue	BH Delayed Announcement Call Attempts per MUPH Queue System/Line	12.2181

Features	USOC 152	USOC152Q	USOC152DESC	Cost per line	Total
Blocking of pay per call services	OC4	149	OUTGOING CALL RESTRICTIONS - CUSTOMER CONTROLLED	0.026201441	3.904014694
Call Forward Don't Answer - All Calls	EVDHG	2	CALL FORWARDING - DON'T ANSWER - PER HUNT GROUP; OVERFLOW FOR LAST LINE - DMS-100	0.053385031	0.106770061
Call Forwarding Variable Remote	NLUAA	14	DISCOUNTED FEATURE OR PACKAGE - REMOTE ACCESS CALL FORWARDING - RES	0.034577895	0.48409053
Call Forwarding Variable Remote	AFD	250	REMOTE ACCESS CALL FORWARDING - BUS	0.034577895	8.644473757
Call Forwarding Variable Remote	RCFVT	0		0.034577895	0
Call Forwarding Variable Remote	RCFWT	0		0.034577895	0
Call Forwarding Variable Remote	RCFRT	0		0.034577895	0
Call Forwarding Variable Remote	RCFRH	0		0.034577895	0
Call Forwarding Variable Remote	RCFVH	0		0.034577895	0
Call Forwarding Variable Remote	RCA	387	REMOTE CALL FORWARDING - ADDITIONAL ACCESS PATH	0.034577895	13.38164538
Call Forwarding Variable Remote	AFM	1706	REMOTE ACCESS CALL FORWARDING - RES	0.034577895	58.98988892
Call Forwarding: Busy Line (Overflow)	EVK	195	CALL FORWARDING - BUSY LINE - DON'T ANSWER - WITHIN THE CO-OVERFLOW	0.017381615	3.389414962
Call Forwarding: Busy Line (Overflow)	EVBHG	1	CALL FORWARDING - BUSY LINE - PER HUNT GROUP; FOR LAST LINE - DMS-100	0.017381615	0.017381615
Call Forwarding: Busy Line (Overflow)	EVO	2607	CALL FORWARDING - BUSY LINE - WITHIN THE CO-OVERFLOW	0.017381615	45.3138708
Call Forwarding: Busy Line (Overflow)	EVOHG	1	CALL FORWARDING - BUSY LINE - PER HUNT GROUP; OVERFLOW FOR LAST LINE - DMS-100	0.017381615	0.017381615
Call Forwarding: Busy Line (Overflow)	FBJHG	0		0.017381615	0
Call Forwarding: Busy Line (Programmable)	ERB	4	CALL FORWARDING - BUSY LINE - WITH CUSTOMER ACTIVATION, DEACTIVATION & CHANGE CAPABILITY; PROGRAMMAB	0.022750926	0.091003703
Call Forwarding: Busy Line/Don't Answer (Expanded)	EVFHG	5	CALL FORWARDING - BUSY LINE - DON'T ANSWER - FORWARD TO OUTSIDE NUMBER - PER HUNT GROUP; FOR LAST LI	0.070766646	0.353833229
Call Forwarding: Busy Line/Don't Answer (Expanded)	FVJ	718	CALL FORWARDING - BUSY LINE - DON'T ANSWER TO A NUMBER OUTSIDE CO; EXPANDED CALL FORWARDING	0.070766646	50.8104517
Call Forwarding: Busy Line/Don't Answer (Expanded)	ESB	2	CUSTOM CALLING PACKAGE - CALL FORWARDING - SPEED CALLING 30 CODE & 3-WAY CALLING	0.070766646	0.141533292
Call Forwarding: Busy Line/Don't Answer (Expanded)	FVJHG	1	CALL FORWARDING - BUSY LINE - DON'T ANSWER TO A NUMBER OUTSIDE CO - PER HUNT GROUP; FOR LAST LINE -	0.070766646	0.070766646
Call Forwarding: Busy Line/Don't Answer (Expanded)	EVKHG	0		0.070766646	0
Call Forwarding: Busy Line/Don't Answer (Expanded)	EVF	997	CALL FORWARDING - BUSY LINE - DON'T ANSWER - FORWARD TO OUTSIDE NUMBER; WITHIN THE C.O.-EXTERNALTO C	0.070766646	70.55434588
Call Forwarding: Don't Answer	ES7	243	CALL WAITING - CALL FORWARDING	0.053385031	12.97256244
Call Forwarding: Don't Answer	FDJHG	2	CALL FORWARDING - DON'T ANSWER TO A NUMBER OUTSIDE CO - PER HUNT GROUP; OVERFLOW FOR LASTLINE - DMS	0.053385031	0.106770061
Call Forwarding: Don't Answer	ERD	7	CALL FORWARDING - DON'T ANSWER - WITH CUSTOMER ACTIVATION, DEACTIVATION & CHANGE CAPABILITY; PROGRAM	0.053385031	0.373695214

Features	USOC 152	USOC152Q	USOC152DESC	Cost per line	Total
Call Forwarding: Don't Answer	HME	0		0.053385031	0
Call Forwarding: Don't Answer	FDJ	178	CALL FORWARDING - DON'T ANSWER TO A NUMBER OUTSIDE CO - EXPANDED CALL FORWARDING	0.053385031	9.502535452
Call Forwarding: Don't Answer	EVD	576	CALL FORWARDING - DON'T ANSWER; WITHIN THE C.O.-EXTERNAL TO CUSTOMER SYSTEM	0.053385031	30.74977764
Call Forwarding: Variable	NLRXZ	1602	DISCOUNTED FEATURE OR PACKAGE; CALL FORWARDING	0.025933346	41.54522076
Call Forwarding: Variable	RCFVF	456	REMOTE CALL FORWARDING - BUSINESS - FIRST ACCESS PATH; MEASURED LOCAL CALL FORWARDING	0.025933346	11.82560591
Call Forwarding: Variable	NLUBR	11	PACKAGE - 7 FEATURES - THE CALL MANAGER CONNECTION; CALL FORWARDING VARIABLE, CALL REJECTION, CALLER	0.025933346	0.285266809
Call Forwarding: Variable	NLUBT	16	PACKAGE - 7 FEATURES - THE CALL MANAGER CONNECTION; CALL FORWARDING VARIABLE, CALL REJECTION, CALLER	0.025933346	0.414933541
Call Forwarding: Variable	NLUBS	5	PACKAGE - 7 FEATURES - THE CALL MANAGER CONNECTION; CALL FORWARDING VARIABLE, CALL REJECTION, CALLER	0.025933346	0.129666731
Call Forwarding: Variable - no call complete option	ESM	37310	CALL FORWARDING - VARIABLE	0.025933346	967.5731501
Call Forwarding: Variable - no call complete option	FOQ	0		0.025933346	0
Call Transfer	EO3	801	3-WAY CALL TRANSFER	0.23445267	187.7965883
Call Waiting Terminating - All Calls	ESX	27945	CALL WAITING - TERMINATING	0.037350478	1043.759109
Call Waiting/ Cancel Call Waiting	ET3	0		0.059810344	0
Call Waiting/ Cancel Call Waiting	ETC	65	CALL FORWARDING - CALL WAITING & 3-WAY CALLING	0.059810344	3.887672345
Call Waiting/ Cancel Call Waiting	ESG	0		0.059810344	0
Call Waiting/ Cancel Call Waiting	ET8	1	CALL WAITING - SPEED CALLING & 3-WAY CALLING	0.059810344	0.059810344
Call Waiting/ Cancel Call Waiting	ESA	2	CALL FORWARDING - CALL WAITING & SPEED CALLING - 8 CODE	0.059810344	0.119620688
Call Waiting/ Cancel Call Waiting	EZN	0		0.059810344	0
Call Waiting/ Cancel Call Waiting	ES6	6	CALL WAITING - SPEED CALLING - 8 CODE	0.059810344	0.358862063
Call Waiting/ Cancel Call Waiting	ER9	31	CALL WAITING & 3-WAY CALLING	0.059810344	1.854120657
Call Waiting/ Cancel Call Waiting	EZT	0		0.059810344	0
Call Waiting/ Cancel Call Waiting	ESW	0		0.059810344	0
Call Waiting/ Cancel Call Waiting	EZQ	0		0.059810344	0
Call Waiting/ Cancel Call Waiting	EZR	0		0.059810344	0
CFBL - All Calls	ER3	7	CALL FORWARDING - SPEED CALLING - 8 CODE	0.017381615	0.121671306
CFBL - All Calls	EZS	0		0.017381615	0
CFBL - All Calls	ESG	0		0.017381615	0
CFBL - All Calls	ER4	1	CALL FORWARDING - SPEED CALLING - 30 CODE	0.017381615	0.017381615
CFBL - All Calls	EZT	0		0.017381615	0
CFBL - All Calls	ESA	2	CALL FORWARDING - CALL WAITING & SPEED CALLING - 8 CODE	0.017381615	0.03476323
CFBL - All Calls	EZQ	0		0.017381615	0
CFBL - All Calls	FBJ	3024	CALL FORWARDING - BUSY LINE TO A NUMBER OUTSIDE CO; EXPANDED CALL FORWARDING	0.017381615	52.56200434

Features	USOC 152	USOC152Q	USOC152DESC	Cost per line	Total
CFBL - Incoming Only	EVB	138	CALL FORWARDING - BUSY LINE; WITHIN THE C.O.-EXTERNAL TO CUSTUMER SYSTEM	0.017381615	2.398662896
CLASS - Anonymous Call Rejection	NLUBS	5	PACKAGE - 7 FEATURES - THE CALL MANAGER CONNECTION; CALL FORWARDING VARIABLE, CALL REJECTION, CALLER	0.239552606	1.197763032
CLASS - Anonymous Call Rejection	N6SD1	7		0.239552606	1.676868245
CLASS - Anonymous Call Rejection	AYK	77523	C.L.A.S.S. - ANONYMOUS CALLER REJECTION	0.239552606	18570.83671
CLASS - Anonymous Call Rejection	N6S	1435		0.239552606	343.7579903
CLASS - Anonymous Call Rejection	NLUBT	16	PACKAGE - 7 FEATURES - THE CALL MANAGER CONNECTION; CALL FORWARDING VARIABLE, CALL REJECTION, CALLER	0.239552606	3.832841704
CLASS - Anonymous Call Rejection	NLUBR	11	PACKAGE - 7 FEATURES - THE CALL MANAGER CONNECTION; CALL FORWARDING VARIABLE, CALL REJECTION, CALLER	0.239552606	2.635078671
CLASS - Call Waiting ID	NWT	1918	C.L.A.S.S. + - CALL WAITING DISPLAY	0.027843163	53.403186
CLASS - Call Waiting ID	PKQ	974	CALL WAITING DISPLAY WITH DISPOSITION ASSOCIATED WITH VOICE MESSAGING SERVICE	0.027843163	27.11924044
CLASS - Call Waiting ID	N2W	30952	CALL WAITING - TERMINATING AND CALL WAITING DISPLAY - C.L.A.S.S. PLUS	0.027843163	861.801571
CLASS - Call Waiting ID	EYYXW	125	CUSTOM CALLING & LINE FEATURE PACKAGE - PRESET PACKAGE WITH CALL WAITING ID	0.027843163	3.480395334
CLASS - Call Waiting ID	PKR	6	CALL WAITING DISPLAY WITH DISPOSITION - NOT ASSOCIATED WITH VOICE MESSAGING	0.027843163	0.167058976
CLASS - Calling Name & Number	NNK	78292	C.L.A.S.S. - CALLING NAME & NUMBER DELIVERY	0.320196339	25068.81175
CLASS - Calling Name & Number	N6SD1	7		0.320196339	2.241374371
CLASS - Calling Name & Number	NDR	28	C.L.A.S.S. - DIALABLE CALLING NAME & NUMBER DELIVERY	0.320196339	8.965497483
CLASS - Calling Name & Number	N6S	1435		0.320196339	459.481746
CLASS - Calling Name & Number	NLUBS	5	PACKAGE - 7 FEATURES - THE CALL MANAGER CONNECTION; CALL FORWARDING VARIABLE, CALL REJECTION, CALLER	0.320196339	1.600981693
CLASS - Calling Name & Number	NKM	7016	C.L.A.S.S. - CALLING NAME & NUMBER DELIVERY - BLOCKING; PER LINE	0.320196339	2246.497512
CLASS - Calling Name & Number	NLUBT	16	PACKAGE - 7 FEATURES - THE CALL MANAGER CONNECTION; CALL FORWARDING VARIABLE, CALL REJECTION, CALLER	0.320196339	5.123141419
CLASS - Calling Name & Number	NLUBR	11	PACKAGE - 7 FEATURES - THE CALL MANAGER CONNECTION; CALL FORWARDING VARIABLE, CALL REJECTION, CALLER	0.320196339	3.522159725
CLASS - Calling Number Delivery	NSD	6788	C.L.A.S.S. - CALLING NUMBER DELIVERY	0.026917913	182.718793
CLASS - Calling Number Delivery	FOQ	0		0.026917913	0
CLASS - Calling Number Delivery - Blocking	NKS	414	C.L.A.S.S. - CALLING NAME & NUMBER DELIVERY - BLOCKING - 2ND RATE LEVEL; PER LINE	0.25140869	104.0831976
CLASS - Continuous Redial	NLUBT	16	PACKAGE - 7 FEATURES - THE CALL MANAGER CONNECTION; CALL FORWARDING VARIABLE, CALL REJECTION, CALLER	0.192272991	3.076367852

Features	USOC 152	USOC152Q	USOC152DESC	Cost per line	Total
CLASS - Continuous Redial	NLUBS	5	PACKAGE - 7 FEATURES - THE CALL MANAGER CONNECTION; CALL FORWARDING VARIABLE, CALL REJECTION, CALLER	0.192272991	0.961364954
CLASS - Continuous Redial	NSS	38014	C.L.A.S.S. - AUTOMATIC CALL RETURN; CONTINUOUS REDIAL	0.192272991	7309.06547
CLASS - Continuous Redial	NLUBR	11	PACKAGE - 7 FEATURES - THE CALL MANAGER CONNECTION; CALL FORWARDING VARIABLE, CALL REJECTION, CALLER	0.192272991	2.115002898
CLASS - Continuous Redial	NLRXL	58	DISCOUNTED FEATURE OR PACKAGE; AUTOMATIC RECALL; CONTINUOUS REDIAL	0.192272991	11.15183346
CLASS - Last Call Return	NSK	25104	C.L.A.S.S. - DISTINCTIVE RINGING - CALL WAITING; PRIORITY CALL	0.053955032	1354.487135
CLASS - Last Call Return	NSQ	39784	C.L.A.S.S. - AUTOMATIC RECALL; LAST CALL RETURN	0.053955032	2146.547012
CLASS - Priority Calling	NLUBR	11	PACKAGE - 7 FEATURES - THE CALL MANAGER CONNECTION; CALL FORWARDING VARIABLE, CALL REJECTION, CALLER	0.109283693	1.202120624
CLASS - Priority Calling	NLUBT	16	PACKAGE - 7 FEATURES - THE CALL MANAGER CONNECTION; CALL FORWARDING VARIABLE, CALL REJECTION, CALLER	0.109283693	1.748539089
CLASS - Priority Calling	NLUBS	5	PACKAGE - 7 FEATURES - THE CALL MANAGER CONNECTION; CALL FORWARDING VARIABLE, CALL REJECTION, CALLER	0.109283693	0.546418465
CLASS - Selective Call Forwarding	NLRXN	39	DISCOUNTED FEATURE OR PACKAGE; SELECTIVE CALL FORWARDING	0.097750226	3.812258827
CLASS - Selective Call Forwarding	ER5	49	CALL FORWARDING - 3-WAY CALLING	0.097750226	4.78976109
CLASS - Selective Call Forwarding	NCE	20858	C.L.A.S.S. - SELECTIVE CALL FORWARDING	0.097750226	2038.874221
CLASS - Selective Call Rejection	SEA	0		0.223931865	0
CLASS - Selective Call Rejection	NLRXO	129	DISCOUNTED FEATURE OR PACKAGE; SELECTIVE CALL REJECTION	0.223931865	28.88721056
CLASS - Selective Call Rejection	NSY	27869	C.L.A.S.S. - SELECTIVE CALL REJECTION	0.223931865	6240.75714
Custom Ringing First Line (Short/Long/Short)	DRS1A	0		0.012103234	0
Custom Ringing First Line (Short/Long/Short)	RGG1A	1434	DEPENDENT TELEPHONE NUMBER - WITH DISTINCTIVE RINGING - WITHOUT LISTING; 1ST NUMBER; RINGING PATTERN	0.012103234	17.35603743
Custom Ringing First Line (Short/Long/Short)	NLQ1A	97	DEPENDENT TELEPHONE NUMBER - WITH DISTINCTIVE RINGING - WITHOUT LISTING - DISCOUNTED; 1ST NUMBER; RI	0.012103234	1.174013689
Custom Ringing First Line (Short/Short)	DRS1B	0		0.012103234	0
Custom Ringing First Line (Short/Short)	NLQ1B	7	DEPENDENT TELEPHONE NUMBER - WITH DISTINCTIVE RINGING - WITHOUT LISTING - DISCOUNTED; 1ST NUMBER; RI	0.012103234	0.084722637
Custom Ringing First Line (Short/Short)	RGG1B	110	DEPENDENT TELEPHONE NUMBER - WITH DISTINCTIVE RINGING - WITHOUT LISTING; 1ST NUMBER; RINGING PATTERN	0.012103234	1.33135573
Custom Ringing First Line (Short/Short/Long)	DRS1C	0		0.012103234	0
Custom Ringing First Line (Short/Short/Long)	NLQ1C	4	DEPENDENT TELEPHONE NUMBER - WITH DISTINCTIVE RINGING - WITHOUT LISTING - DISCOUNTED; 1ST NUMBER; RI	0.012103234	0.048412936

Features	USOC 152	USOC152Q	USOC152DESC	Cost per line	Total
Custom Ringing First Line (Short/Short/Long)	RGG1C	79	DEPENDENT TELEPHONE NUMBER - WITH DISTINCTIVE RINGING - WITHOUT LISTING; 1ST NUMBER; RINGING PATTERN	0.012103234	0.956155479
Custom Ringing Second Line (Short/Long/Short)	RGG2A	13	DEPENDENT TELEPHONE NUMBER - WITH DISTINCTIVE RINGING - WITHOUT LISTING; 2ND NUMBER; RINGING PATTERN	0.011352833	0.14758683
Custom Ringing Second Line (Short/Long/Short)	DRS2A	0		0.011352833	0
Custom Ringing Second Line (Short/Long/Short)	RGG2B	183	DEPENDENT TELEPHONE NUMBER - WITH DISTINCTIVE RINGING - WITHOUT LISTING; 2ND NUMBER; RINGING PATTERN	0.011352833	2.077568458
Custom Ringing Second Line (Short/Short)	RGG2C	74	DEPENDENT TELEPHONE NUMBER - WITH DISTINCTIVE RINGING - WITHOUT LISTING; 2ND NUMBER; RINGING PATTERN	0.011352833	0.84010965
Custom Ringing Second Line (Short/Short)	DRS2B	0		0.011352833	0
Custom Ringing Second Line (Short/Short/Long)	DRS2C	0		0.011352833	0
Custom Ringing Third Line (Short/Long/Short)	RGG3C	113	DEPENDENT TELEPHONE NUMBER - WITH DISTINCTIVE RINGING - WITHOUT LISTING; 3RD NUMBER; RINGING PATTERN	0.009077424	1.025748962
Custom Ringing Third Line (Short/Long/Short)	RGG3A	4	DEPENDENT TELEPHONE NUMBER - WITH DISTINCTIVE RINGING - WITHOUT LISTING; 3RD NUMBER; RINGING PATTERN	0.009077424	0.036309698
Custom Ringing Third Line (Short/Long/Short)	RGG3B	2	DEPENDENT TELEPHONE NUMBER - WITH DISTINCTIVE RINGING - WITHOUT LISTING; 3RD NUMBER; RINGING PATTERN	0.009077424	0.018154849
Custom Ringing Third Line (Short/Short/Long)	DRS3C	0		0.009077424	0
Directed Call Pickup with Barge-in	PUQ	0		0.098500894	0
Directed Call Pickup without Barge-in	PUN	0		0.025284212	0
Distinctive Ring/Distinctive Call Waiting	NSK	25104	C.L.A.S.S. - DISTINCTIVE RINGING - CALL WAITING; PRIORITY CALL	0.01235437	310.1441057
Distinctive Ringing	DHA	0		0.012103234	0
Distinctive Ringing	NLRX8	56	DISCOUNTED FEATURE OR PACKAGE; DISTINCTIVE RINGING - CALL WAITING; PRIORITY CALL	0.012103234	0.677781099
Hot Line - per line	HLA	32	HOT LINE - DIRECT CONNECT TO PREASSIGNED DESTINATION NUMBER; CAN RECEIVE INCOMING CALLS	0.051462797	1.646809514
Hunting: Multiposition Circular Hunting	UMH	411	PER STATION LINE IN HUNT GROUP - ASSOCIATED WITH ONA	0.180376907	74.13490859
Hunting: Multiposition Circular Hunting	HCKPG	102	CIRCULAR HUNTING - PER GROUP; INCREMENTAL CHARGE	0.180376907	18.39844447
Hunting: Multiposition Circular Hunting	HTG	9309	HUNTING FEATURE - PER LINE EQUIPPED	0.180376907	1679.128623
Message Waiting Indication Audible/Visual	MWW	1086	MESSAGE WAITING INDICATOR; AUDIBLE	0.049070714	53.29079493
Message Waiting Indication Audible/Visual	M1W	90	MESSAGE WAITING AUDIBLE & VISUAL INDICATOR	0.049070714	4.416364221
Message Waiting Indication Audible/Visual	MAW	0		0.049070714	0
Night Service Arrangement	ATF	12	TIME OF DAY/DAY OF WEEK CALL FORWARDING	0.001443477	0.017321722
Speed Calling 30 Number	ESG	0		0.00826685	0
Speed Calling 30 Number	ESW	0		0.00826685	0
Speed Calling 30 Number	EZT	0		0.00826685	0
Speed Calling 30 Number	EZL	0		0.00826685	0

Features	USOC 152	USOC152Q	USOC152DESC	Cost per line	Total
Speed Calling 30 Number	ER7	8	SPEED CALLING - 30 CODE & 3-WAY CALLING	0.00826685	0.066134802
Speed Calling 30 Number	EZS	0		0.00826685	0
Speed Calling 30 Number	ET3	0		0.00826685	0
Speed Calling 30 Number	EZR	0		0.00826685	0
Speed Calling 30 Number	EZN	0		0.00826685	0
Speed Calling 30 Number	EZQ	0		0.00826685	0
Speed Calling 30 Number	E3D	23269	SPEED CALLING - 30 CODE - CUST CHANGEABLE	0.00826685	192.3613376
Speed Calling 30 Number	ESB	2	CUSTOM CALLING PACKAGE - CALL FORWARDING - SPEED CALLING 30 CODE & 3-WAY CALLING	0.00826685	0.0165337
Speed Calling 30 Number	ER4	1	CALL FORWARDING - SPEED CALLING - 30 CODE	0.00826685	0.00826685
Speed Calling 8 Number	ER6	6	SPEED CALLING - 8 CODE & 3-WAY CALLING	0.00826685	0.049601101
Speed Calling 8 Number	ER3	7	CALL FORWARDING - SPEED CALLING - 8 CODE	0.00826685	0.057867951
Speed Calling 8 Number	EZQ	0		0.00826685	0
Speed Calling 8 Number	EZT	0		0.00826685	0
Speed Calling 8 Number	EZR	0		0.00826685	0
Speed Calling 8 Number	E8C	23247	SPEED CALLING - 8 CODE - CUST CHANGEABLE	0.00826685	192.1794669
Speed Calling 8 Number	ET8	1	CALL WAITING - SPEED CALLING & 3-WAY CALLING	0.00826685	0.00826685
Speed Calling 8 Number	NLRXW	1101	DISCOUNTED FEATURE OR PACKAGE; SPEED CALLING - 8 CODE	0.00826685	9.101802085
Speed Calling 8 Number	ESA	2	CALL FORWARDING - CALL WAITING & SPEED CALLING - 8 CODE	0.00826685	0.0165337
Speed Calling 8 Number	EZS	0		0.00826685	0
Speed Calling 8 Number	EZL	0		0.00826685	0
Speed Calling 8 Number	ES6	6	CALL WAITING - SPEED CALLING - 8 CODE	0.00826685	0.049601101
Three Way Calling	ER5	49	CALL FORWARDING - 3-WAY CALLING	0.23445267	11.48818081
Three Way Calling	ESB	2	CUSTOM CALLING PACKAGE - CALL FORWARDING - SPEED CALLING 30 CODE & 3-WAY CALLING	0.23445267	0.468905339
Three Way Calling	NLUBS	5	PACKAGE - 7 FEATURES - THE CALL MANAGER CONNECTION; CALL FORWARDING VARIABLE, CALL REJECTION, CALLER	0.23445267	1.172263348
Three Way Calling	NLUBT	16	PACKAGE - 7 FEATURES - THE CALL MANAGER CONNECTION; CALL FORWARDING VARIABLE, CALL REJECTION, CALLER	0.23445267	3.751242713
Three Way Calling	NLUBR	11	PACKAGE - 7 FEATURES - THE CALL MANAGER CONNECTION; CALL FORWARDING VARIABLE, CALL REJECTION, CALLER	0.23445267	2.578979365
Three Way Calling	ETC	65	CALL FORWARDING - CALL WAITING & 3-WAY CALLING	0.23445267	15.23942352
Three Way Calling	ER9	31	CALL WAITING & 3-WAY CALLING	0.23445267	7.268032756
Three Way Calling	ER7	8	SPEED CALLING - 30 CODE & 3-WAY CALLING	0.23445267	1.875621356
Three Way Calling	ER6	6	SPEED CALLING - 8 CODE & 3-WAY CALLING	0.23445267	1.406716017
Three Way Calling	ESC	40556	3-WAY CALLING	0.23445267	9508.462466
Three Way Calling	EZS	0		0.23445267	0
Three Way Calling	ET8	1	CALL WAITING - SPEED CALLING & 3-WAY CALLING	0.23445267	0.23445267
Three Way Calling	EZR	0		0.23445267	0

Features	USOC 152	USOC152Q	USOC152DESC	Cost per line	Total
Three Way Calling	EZT	0		0.23445267	0
Three Way Calling	ET3	0		0.23445267	0
Three Way Calling	NLRXR	1704	DISCOUNTED FEATURE OR PACKAGE; 3-WAY CALLING	0.23445267	399.5073489
Toll Restriction Service	RY6	0		0.004651402	0
Toll Restriction Service	KX9	16723	TOLL DENIAL	0.004651402	77.78539673
Toll Restriction Service	RTVXN	81971	TOLL RESTRICTION - PER LINE OR TRUNK EQUIPPED; PROHIBITING 976 & LIKE PREFIXES CALLS *COMMENT: IN EA	0.004651402	381.2800786
Toll Restriction Service	RTY	15	TOLL RESTRICTION - PER LINE; IN CENTRAL, MAY INCLUDE 10XXX RESTRICTION	0.004651402	0.069771031
Toll Restriction Service	RBE	108	TOLL RESTRICTION WITH BILLED NUMBER SCREENING; LIMITED SERVICE-CUST NOT ALLOWED ADDITIONAL FEATURES	0.004651402	0.502351423
Toll Restriction Service	RTVXY	275	TOLL RESTRICTION - PER LINE OR TRUNK EQUIPPED; PROHIBITING 10XXX+1 & 10XXX+011+ CALLS - CALLS ROUTED	0.004651402	1.279135568
Toll Restriction Service	RBVXC	1588	TOLL RESTRICTION - PER LINE OR TRUNK EQUIPPED; PROHIBITING 10XXX 011+ & 011+ CALLS - CALLS ROUTED TO	0.004651402	7.386426479
Toll Restriction Service	RBE1X	14233	TOLL RESTRICTION WITH BILLED NUMBER SCREENING - OPTION 1; RESTRICTED SERVICE-CUSTOMER IS ALLOWED ADD	0.004651402	66.20340559
Toll Restriction Service	RTVXQ	480	TOLL RESTRICTION - BILLED NUMBER SCREENING	0.004651402	2.232672991
		682239			

Features	USOC178	USOC178Q	USOC178DESC	Cost per line	Total
Call Forwarding Variable Remote	CV9	4480	CALL FORWARDING - VARIABLE - PROVISIONING ONLY - STANDARD STATION LINE FEATURE	0.034577895	154.90897
Call Forwarding: Busy Line (Expanded)	69J	563	CALL FORWARDING - BUSY LINE; PROVISIONING ONLY - STANDARD STATION LINE FEATURE	0.017381615	9.78584935
Call Forwarding: Busy Line (Overflow)	E6GUR	0		0.017381615	0
Call Forwarding: Busy Line/Don't Answer (Expanded)	E5E	0		0.070766646	0
Call Forwarding: Don't Answer	69H	385	CALL FORWARDING - DON'T ANSWER; PROVISIONING ONLY - STANDARD STATION LINE FEATURE	0.053385031	20.5532368
Call Hold	6APPK	2877	CALL HOLD - PER SET; PROVISIONING ONLY - STANDARD STATION LINE FEATURE	0.007061499	20.3159322
Call Pickup	E3PPK	332	CALL PICK-UP - PER SET - PROVISIONING ONLY - STANDARD STATION LINE FEATURE	0.006397855	2.12408784
Call Transfer	N13	5123	CALL TRANSFER - CONSULTATION HOLD - 3-WAY CALLING - PER LINE; FOR CENTREX PLUS LINES & WATS TERMINAT	0.23445267	1201.10103
Call Waiting/ Cancel Call Waiting	6SY	55	CALL WAITING - TERMINATING; PROVISIONING ONLY - STANDARD STATION LINE FEATURE	0.059810344	3.28956891
Conference Calling - Meet Me	GVT	3763	CONFERENCE CALLING - STA CONTROLLED; PROVISIONING ONLY - STANDARD STATION LINE FEATURE	13.24926961	49857.0015
Directed Call Pickup without Barge-in	69D	252	DIRECTED CALL PICKUP - NON-BARGE-IN; PROVISIONING ONLY - STANDARD STATION LINE FEATURE	0.025284212	6.3716214
Message Waiting Indication Audible/Visual	AWT	0		0.049070714	0
Speed Calling 1 Digit Controller	EZJ	4	ABBREVIATED DIALING - SPEED CALLING LIST - 1 DIGIT; PROV ONLY-STANDARD STATION LINE FEATURE - CONTRO	0.00826685	0.0330674
Speed Calling 1 Digit User	GVZ	16	ABBREVIATED DIALING - SPEED CALLING LIST - 1 DIGIT; PROV ONLY-STANDARD STATION LINE FEATURE - USER O	0.00826685	0.1322696
Speed Calling 1 Digit User	GVJ	1253	ABBREVIATED DIALING - SPEED CALLING LIST - 1 DIGIT	0.00826685	10.3583633
Speed Calling 2 Digit User	GV2	81	ABBREVIATED DIALING - SPEED CALLING LIST - 2 DIGIT	0.00826685	0.66961487
Speed Calling 2 Digit User	EVH	15	ABBREVIATED DIALING - SPEED CALLING LIST - 2 DIGITS; PROV ONLY-STANDARD STATION LINE FEATURE - CONTR	0.00826685	0.12400275
Speed Calling 30 Number	GVV	28	ABBREVIATED DIALING - SPEED CALLING LIST 30 CODE - 2 DIGIT; PROV ONLY-STANDARD STATION LINE FEATURE	0.00826685	0.23147181
		19227			

Features	USOC174	USOC174Q	USOC174DESC	Cost per line	Total
Call Forwarding: Busy Line (Overflow)	69J	5469	CALL FORWARDING - BUSY LINE; PROVISIONING ONLY - STANDARD STATION LINE FEATURE	0.017381615	95.0600535
Call Forwarding: Busy Line (Overflow)	E6GUR	174	CALL FORWARDING - BUSY LINE - UNRESTRICTED SOURCE	0.017381615	3.02440104
Call Forwarding: Busy Line (Overflow)	E6G	3	CALL FORWARDING - BUSY LINE	0.017381615	0.05214485
Call Forwarding: Busy Line/Don't Answer (Expanded)	E5E	0		0.070766646	0
Call Forwarding: Don't Answer	E9GUR	173	CALL FORWARDING - DON'T ANSWER - UNRESTRICTED SOURCE	0.053385031	9.2356103
Call Forwarding: Don't Answer	E9G	4	CALL FORWARDING - DON'T ANSWER; FROZEN IN WASHINGTON	0.053385031	0.21354012
Call Forwarding: Don't Answer	69H	4560	CALL FORWARDING - DON'T ANSWER; PROVISIONING ONLY - STANDARD STATION LINE FEATURE	0.053385031	243.43574
Call Forwarding: Variable	CV9	6878	CALL FORWARDING - VARIABLE - PROVISIONING ONLY - STANDARD STATION LINE FEATURE	0.025933346	178.369556
Call Hold/3-Way/Call Transfer	EAB	24	CALL HOLD	0.23445267	5.62686407
Call Hold/3-Way/Call Transfer	N13	24709	CALL TRANSFER - CONSULTATION HOLD - 3-WAY CALLING - PER LINE; FOR CENTREX PLUS LINES & WATS TERMINAT	0.23445267	5793.09101

Features	USOC174	USOC174Q	USOC174DESC	Cost per line	Total
Call Hold/3-Way/Call Transfer	6APPK	8020	CALL HOLD - PER SET; PROVISIONING ONLY - STANDARD STATION LINE FEATURE	0.23445267	1880.31041
Call Pickup	E3PPK	3395	CALL PICK-UP - PER SET - PROVISIONING ONLY - STANDARD STATION LINE FEATURE	0.006397855	21.7207176
Call Pickup	E3P	53	CALL PICK-UP	0.006397855	0.33908631
Call Pickup	E3N	0		0.006397855	0
Call Waiting Dial Originating	E6C	0		0.00898017	0
Call Waiting Originating	ESZ	1	CALL WAITING - ORIGINATING	0.01862628	0.01862628
Call Waiting/ Cancel Call Waiting	E6N	3	CALL WAITING - INTRAGROUP	0.059810344	0.17943103
Call Waiting/ Cancel Call Waiting	6SY	4398	CALL WAITING - TERMINATING; PROVISIONING ONLY - STANDARD STATION LINE FEATURE	0.059810344	263.045892
Conference Calling - Meet Me	GVT	948	CONFERENCE CALLING - STA CONTROLLED; PROVISIONING ONLY - STANDARD STATION LINE FEATURE	13.24926961	12560.3076
Directed Call Pickup without Barge-in	69D	229	DIRECTED CALL PICKUP - NON-BARGE-IN; PROVISIONING ONLY - STANDARD STATION LINE FEATURE	0.025284212	5.79008453
Message Waiting Indication Audible/Visual	AWT	7	AUTOMATIC MESSAGE DESK - MESSAGE WAITING INDICATOR	0.049070714	0.34349499
Speed Calling 1 Digit Controller	EZJ	2266	ABBREVIATED DIALING - SPEED CALLING LIST - 1 DIGIT; PROV ONLY- STANDARD STATION LINE FEATURE - CONTRO	0.00826685	18.7326826

Features	USOC174	USOC174Q	USOC174DESC	Cost per line	Total
Speed Calling 1 Digit User	GVJ	1911	ABBREVIATED DIALING - SPEED CALLING LIST - 1 DIGIT	0.00826685	15.7979508
Speed Calling 1# List Individual	GVZ	59	ABBREVIATED DIALING - SPEED CALLING LIST - 1 DIGIT; PROV ONLY- STANDARD STATION LINE FEATURE - USER O	0.00826685	0.48774416
Speed Calling 2 Digit Controller	EVH	373	ABBREVIATED DIALING - SPEED CALLING LIST - 2 DIGITS; PROV ONLY- STANDARD STATION LINE FEATURE - CONTR	0.00826685	3.08353513
Speed Calling 2 Digit User	GV2	3885	ABBREVIATED DIALING - SPEED CALLING LIST - 2 DIGIT	0.00826685	32.1167131
Speed Calling 30 Number	GVV	299	ABBREVIATED DIALING - SPEED CALLING LIST 30 CODE - 2 DIGIT; PROV ONLY-STANDARD STATION LINE FEATURE	0.00826685	2.47178821
Speed Calling 30 Number	ESF1L	0		0.00826685	0
Speed Calling 8 Number	EST1L	0		0.00826685	0
Speed Calling 8 Number	ESHC6	0		0.00826685	0
Station Dial Conferencing (6 Way)	EAN	0		1.489913721	0
Three Way Calling	E2H	353	3-WAY CONFERENCE TRANSFER - PER STATION; FROZEN IN WASHINGTON	0.23445267	82.7617924
		68194			

Features	USOC144	USOC144Q	USOC144DESC	Cost per line	Total
Call Hold/3-Way/Call Transfer	MVP11	847	MULTILINE VARIETY PACKAGE - PLAN 3 - CENTRON I-BASIC PACKAGE INCLUDES TT, CALL HOLD, TRANSFR, 3-WAY	0.23445267	198.581411
Call Pickup	MVPCU	44	MULTILINE VARIETY PACKAGE - CALL PICKUP; CENTRON I	0.006397855	0.28150562
Call Waiting/ Cancel Call Waiting	MVPCW	29	MULTILINE VARIETY PACKAGE - CALL WAITING; CENTRON I-CALL WAITING	0.059810344	1.73449997
Group Intercom	MVP1N	1	MULTILINE VARIETY PACKAGE - INTERCOM - 6 CODE CAPACITY; CENTRON I	0.074937294	0.07493729
Speed Calling 30 Number	MVPCD	13	MULTILINE VARIETY PACKAGE - CONVENIENCE DIALING - 30 NO LIST; CENTRON I-CONV DIALING 30 NUMBER LIST	0.00826685	0.10746905
Speed Calling 8 Number	MBWCD	12	MULTILINE VARIETY PACKAGE - CONVENIENCE DIALING - 6 NO LIST; CENTRON I	0.00826685	0.0992022
Station Dial Conferencing (6 Way)	MVP6C	8	MULTILINE VARIETY PACKAGE - CONFERENCE CALLING - 6 PORT	1.489913721	11.9193098
		954			

Parameter File: Y:\Backup Srvr\SGAT Features\South Dakota\Features in Port\SD SGAT Features 5453 init.xls, Sheet "WINPC3 Parameters"
State(s): SD
Database Vintage: 00SD02E
Factors For: Interconnection
Report Type: ICM Format
Decimal Places: 4
Costs Format: Monthly
Group Totals: Yes
ACF Input: Y:\Backup Srvr\SGAT Features\South Dakota\Features in Port\SD SGAT Features 5453 init.xls, Sheet "WINPC3 ACF Inputs"
ACF Output: Y:\Backup Srvr\SGAT Features\South Dakota\Features in Port\SD SGAT Features 5453 init.xls, Sheet "WINPC3 ACF Outputs"
Investment: Y:\Backup Srvr\SGAT Features\South Dakota\Features in Port\SD SGAT Features 5453 init.xls, Sheet "WINPC3 Investments"
Output: Y:\Backup Srvr\SGAT Features\South Dakota\Features in Port\SD SGAT Features 5453 init.xls, Sheet "WINPC3 Output"

State: South Dakota

Description	USOC	Loaded Investment	Direct Expense	Total Direct	Network Support	Directly Attributed	TELRIC	Common	TELRIC + Common
10XXX Direct Dialed Blocking		$0.0296	$0.0000	$0.0005	$0.0000	$0.0001	$0.0006	$0.0000	$0.0007
Account Codes - per system		$307.5790	$0.0000	$5.2875	$0.2974	$1.2529	$6.5404	$0.2954	$6.8358
Attendant Access Line - per station line		$0.2415	$0.0000	$0.0042	$0.0002	$0.0010	$0.0051	$0.0002	$0.0054
Audible Message Waiting		$2.2079	$0.0000	$0.0380	$0.0021	$0.0090	$0.0470	$0.0021	$0.0491
Authorization Codes - per system		$130.3588	$0.0000	$2.2410	$0.1260	$0.5310	$2.7720	$0.1252	$2.8972
Auto Callback		$0.2903	$0.0000	$0.0050	$0.0003	$0.0012	$0.0062	$0.0003	$0.0065
Automatic Line		$0.0000	$0.0000	$0.0000	$0.0000	$0.0000	$0.0000	$0.0000	$0.0000
Automatic Route Selection - Common Equip. per system		$87.2269	$0.0000	$1.4995	$0.0843	$0.3553	$1.8548	$0.0838	$1.9386
Blocking of pay per call services		$1.1789	$0.0000	$0.0203	$0.0011	$0.0048	$0.0251	$0.0011	$0.0262
Bridging		$0.0166	$0.0000	$0.0003	$0.0000	$0.0001	$0.0004	$0.0000	$0.0004
Call Drop		$0.0036	$0.0000	$0.0001	$0.0000	$0.0000	$0.0001	$0.0000	$0.0001
Call Exclusion - Automatic		$0.0001	$0.0000	$0.0000	$0.0000	$0.0000	$0.0000	$0.0000	$0.0000
Call Exclusion - Manual		$0.0001	$0.0000	$0.0000	$0.0000	$0.0000	$0.0000	$0.0000	$0.0000
Call Forward Don't Answer - All Calls		$2.4021	$0.0000	$0.0413	$0.0023	$0.0098	$0.0511	$0.0023	$0.0534
Call Forwarding Incoming Only		$0.2506	$0.0000	$0.0043	$0.0002	$0.0010	$0.0053	$0.0002	$0.0056
Call Forwarding Intra Group Only		$0.2123	$0.0000	$0.0036	$0.0002	$0.0009	$0.0045	$0.0002	$0.0047
Call Forwarding Variable Remote		$1.5558	$0.0000	$0.0267	$0.0015	$0.0063	$0.0331	$0.0015	$0.0346

State: South Dakota

Description	USOC	Loaded Investment	Direct Expense	Total Direct	Network Support	Directly Attributed	TELRIC	Common	TELRIC + Common
Call Forwarding: Busy Line (Expanded)		$0.7821	$0.0000	$0.0134	$0.0008	$0.0032	$0.0166	$0.0008	$0.0174
Call Forwarding: Busy Line (External)		$0.7821	$0.0000	$0.0134	$0.0008	$0.0032	$0.0166	$0.0008	$0.0174
Call Forwarding: Busy Line (External) Don't Answer		$3.1842	$0.0000	$0.0547	$0.0031	$0.0130	$0.0677	$0.0031	$0.0708
Call Forwarding: Busy Line (Overflow)		$0.7821	$0.0000	$0.0134	$0.0008	$0.0032	$0.0166	$0.0008	$0.0174
Call Forwarding: Busy Line (Overflow) Don't Answer		$3.1842	$0.0000	$0.0547	$0.0031	$0.0130	$0.0677	$0.0031	$0.0708
Call Forwarding: Busy Line (Programmable)		$1.0237	$0.0000	$0.0176	$0.0010	$0.0042	$0.0218	$0.0010	$0.0228
Call Forwarding: Busy Line/Don't Answer (Expanded)		$3.1842	$0.0000	$0.0547	$0.0031	$0.0130	$0.0677	$0.0031	$0.0708
Call Forwarding: Don't Answer		$2.4021	$0.0000	$0.0413	$0.0023	$0.0098	$0.0511	$0.0023	$0.0534
Call Forwarding: Don't Answer (Expanded)		$2.4021	$0.0000	$0.0413	$0.0023	$0.0098	$0.0511	$0.0023	$0.0534
Call Forwarding: Don't Answer (Programmable)		$2.1647	$0.0000	$0.0372	$0.0021	$0.0088	$0.0460	$0.0021	$0.0481
Call Forwarding: Variable		$1.1669	$0.0000	$0.0201	$0.0011	$0.0048	$0.0248	$0.0011	$0.0259
Call Forwarding: Variable - no call complete option		$1.1669	$0.0000	$0.0201	$0.0011	$0.0048	$0.0248	$0.0011	$0.0259
Call Hold		$0.3177	$0.0000	$0.0055	$0.0003	$0.0013	$0.0068	$0.0003	$0.0071
Call Hold/3-Way/Call Transfer		$10.5492	$0.0000	$0.1813	$0.0102	$0.0430	$0.2243	$0.0101	$0.2345
Call Park (Basic - Store & Retrieve)		$0.6943	$0.0000	$0.0119	$0.0007	$0.0028	$0.0148	$0.0007	$0.0154
Call Pickup		$0.2879	$0.0000	$0.0049	$0.0003	$0.0012	$0.0061	$0.0003	$0.0064
Call Transfer		$10.5492	$0.0000	$0.1813	$0.0102	$0.0430	$0.2243	$0.0101	$0.2345
Call Waiting Dial Originating		$0.4041	$0.0000	$0.0069	$0.0004	$0.0016	$0.0086	$0.0004	$0.0090
Call Waiting Indication - per timing state		$16.3899	$0.0000	$0.2818	$0.0158	$0.0668	$0.3485	$0.0157	$0.3643
Call Waiting Originating		$0.8381	$0.0000	$0.0144	$0.0008	$0.0034	$0.0178	$0.0008	$0.0186
Call Waiting Terminating - All Calls		$1.6806	$0.0000	$0.0289	$0.0016	$0.0068	$0.0357	$0.0016	$0.0374
Call Waiting Terminating - Incoming Only		$1.6806	$0.0000	$0.0289	$0.0016	$0.0068	$0.0357	$0.0016	$0.0374
Call Waiting/ Cancel Call Waiting		$2.6912	$0.0000	$0.0463	$0.0026	$0.0110	$0.0572	$0.0026	$0.0598
Centrex Management System (CMS)		$1.1349	$0.3524	$0.3887	$0.0219	$0.0921	$0.4808	$0.0217	$0.5026
Centrex Plus DID numbers per number		$1.6778	$0.0000	$0.0288	$0.0016	$0.0068	$0.0357	$0.0016	$0.0373
Centrex Plus to Centrex Plus		$222.3361	$0.0000	$3.8221	$0.2150	$0.9057	$4.7278	$0.2135	$4.9413
Centrex Plus to IC Carrier		$222.3361	$0.0000	$3.8221	$0.2150	$0.9057	$4.7278	$0.2135	$4.9413
Centrex Plus to PBX/Key Blocked		$222.3361	$0.0000	$3.8221	$0.2150	$0.9057	$4.7278	$0.2135	$4.9413
Centrex Plus to PBX/Key Non-Blocked		$222.3361	$0.0000	$3.8221	$0.2150	$0.9057	$4.7278	$0.2135	$4.9413
CFBL - All Calls		$0.7821	$0.0000	$0.0134	$0.0008	$0.0032	$0.0166	$0.0008	$0.0174
CFBL - Incoming Only		$0.7821	$0.0000	$0.0134	$0.0008	$0.0032	$0.0166	$0.0008	$0.0174

State: South Dakota

Description	USOC	Loaded Investment	Direct Expense	Total Direct	Network Support	Directly Attributed	TELRIC	Common	TELRIC + Common
CFDA Incoming Only		$0.3536	$0.0000	$0.0061	$0.0003	$0.0014	$0.0075	$0.0003	$0.0079
CLASS - Anonymous Call Rejection		$10.7787	$0.0000	$0.1853	$0.0104	$0.0439	$0.2292	$0.0104	$0.2396
CLASS - Call Waiting ID		$1.2528	$0.0000	$0.0215	$0.0012	$0.0051	$0.0266	$0.0012	$0.0278
CLASS - Calling Name & Number		$14.4073	$0.0000	$0.2477	$0.0139	$0.0587	$0.3064	$0.0138	$0.3202
CLASS - Calling Number Delivery		$1.2112	$0.0000	$0.0208	$0.0012	$0.0049	$0.0258	$0.0012	$0.0269
CLASS - Calling Number Delivery - Blocking		$11.3122	$0.0000	$0.1945	$0.0109	$0.0461	$0.2405	$0.0109	$0.2514
CLASS - Continuous Redial		$8.6514	$0.0000	$0.1487	$0.0084	$0.0352	$0.1840	$0.0083	$0.1923
CLASS - Last Call Return		$2.4277	$0.0000	$0.0417	$0.0023	$0.0099	$0.0516	$0.0023	$0.0540
CLASS - Priority Calling		$4.9172	$0.0000	$0.0845	$0.0048	$0.0200	$0.1046	$0.0047	$0.1093
CLASS - Selective Call Forwarding		$4.3983	$0.0000	$0.0756	$0.0043	$0.0179	$0.0935	$0.0042	$0.0978
CLASS - Selective Call Rejection		$10.0759	$0.0000	$0.1732	$0.0097	$0.0410	$0.2143	$0.0097	$0.2239
Conference Calling - Meet Me		$596.1532	$0.0000	$10.2483	$0.5764	$2.4284	$12.6767	$0.5726	$13.2493
Conference Calling - Preset		$435.4496	$0.0000	$7.4857	$0.4210	$1.7737	$9.2595	$0.4182	$9.6777
Custom Ringing First Line (Short/Long/Short)		$0.5446	$0.0000	$0.0094	$0.0005	$0.0022	$0.0116	$0.0005	$0.0121
Custom Ringing First Line (Short/Short)		$0.5446	$0.0000	$0.0094	$0.0005	$0.0022	$0.0116	$0.0005	$0.0121
Custom Ringing First Line (Short/Short/Long)		$0.5446	$0.0000	$0.0094	$0.0005	$0.0022	$0.0116	$0.0005	$0.0121
Custom Ringing Second Line (Short/Long/Short)		$0.5108	$0.0000	$0.0088	$0.0005	$0.0021	$0.0109	$0.0005	$0.0114
Custom Ringing Second Line (Short/Short)		$0.5108	$0.0000	$0.0088	$0.0005	$0.0021	$0.0109	$0.0005	$0.0114
Custom Ringing Second Line (Short/Short/Long)		$0.5108	$0.0000	$0.0088	$0.0005	$0.0021	$0.0109	$0.0005	$0.0114
Custom Ringing Third Line (Short/Long/Short)		$0.4084	$0.0000	$0.0070	$0.0004	$0.0017	$0.0087	$0.0004	$0.0091
Custom Ringing Third Line (Short/Short)		$0.4084	$0.0000	$0.0070	$0.0004	$0.0017	$0.0087	$0.0004	$0.0091
Custom Ringing Third Line (Short/Short/Long)		$0.4084	$0.0000	$0.0070	$0.0004	$0.0017	$0.0087	$0.0004	$0.0091
Data Call Protection (DMS 100)		$0.0000	$0.0000	$0.0000	$0.0000	$0.0000	$0.0000	$0.0000	$0.0000
Dir Sta Sel/Busy Lamp Fld per arrangement		$72.1810	$0.0000	$1.2408	$0.0698	$0.2940	$1.5349	$0.0693	$1.6042
Directed Call Pickup with Barge-in		$4.4321	$0.0000	$0.0762	$0.0043	$0.0181	$0.0942	$0.0043	$0.0985
Directed Call Pickup without Barge-in		$1.1377	$0.0000	$0.0196	$0.0011	$0.0046	$0.0242	$0.0011	$0.0253
Distinctive Ring/Distinctive Call Waiting		$0.5559	$0.0000	$0.0096	$0.0005	$0.0023	$0.0118	$0.0005	$0.0124
Distinctive Ringing		$0.5446	$0.0000	$0.0094	$0.0005	$0.0022	$0.0116	$0.0005	$0.0121
EBS - Set Interface - per station line		$56.1239	$0.0000	$0.9648	$0.0543	$0.2286	$1.1934	$0.0539	$1.2473
Executive Busy Overide		$0.0590	$0.0000	$0.0010	$0.0001	$0.0002	$0.0013	$0.0001	$0.0013
Expensive Route Warning Tone- per system		$0.0000	$0.0000	$0.0000	$0.0000	$0.0000	$0.0000	$0.0000	$0.0000

State: South Dakota

Description	USOC	Loaded Investment	Direct Expense	Total Direct	Network Support	Directly Attributed	TELRIC	Common	TELRIC + Common
Facility Restriction Level - per system		$0.0000	$0.0000	$0.0000	$0.0000	$0.0000	$0.0000	$0.0000	$0.0000
Feature Display		$0.0087	$0.0000	$0.0001	$0.0000	$0.0000	$0.0002	$0.0000	$0.0002
Group Intercom		$3.3718	$0.0000	$0.0580	$0.0033	$0.0137	$0.0717	$0.0032	$0.0749
Hot Line - per line		$2.3156	$0.0000	$0.0398	$0.0022	$0.0094	$0.0492	$0.0022	$0.0515
Hunting: Multiposition Circular Hunting		$8.1161	$0.0000	$0.1395	$0.0078	$0.0331	$0.1726	$0.0078	$0.1804
Hunting: Multiposition Hunt Queuing		$6.3387	$0.0000	$0.1090	$0.0061	$0.0258	$0.1348	$0.0061	$0.1409
Hunting: Multiposition Series Hunting		$8.1161	$0.0000	$0.1395	$0.0078	$0.0331	$0.1726	$0.0078	$0.1804
Hunting: Multiposition with Announcement in Queue		$128.4308	$0.0000	$2.2078	$0.1242	$0.5231	$2.7310	$0.1234	$2.8543
Hunting: Multiposition with Music in Queue		$43.7204	$0.0000	$0.7516	$0.0423	$0.1781	$0.9297	$0.0420	$0.9717
Incoming Calls Barred		$0.2927	$0.0000	$0.0050	$0.0003	$0.0012	$0.0062	$0.0003	$0.0065
International Direct Dial Blocking		$0.4313	$0.0000	$0.0074	$0.0004	$0.0018	$0.0092	$0.0004	$0.0096
ISDN Short Hunt		$20.6132	$0.0000	$0.3544	$0.0199	$0.0840	$0.4383	$0.0198	$0.4581
Line Side Answer Supervision		$0.8280	$0.0000	$0.0142	$0.0008	$0.0034	$0.0176	$0.0008	$0.0184
Loudspeaker Paging - per trunk group		$898.8292	$0.0000	$15.4516	$0.8691	$3.6613	$19.1128	$0.8633	$19.9761
Make Busy Arrangements - per group		$11.7954	$0.0000	$0.2028	$0.0114	$0.0480	$0.2508	$0.0113	$0.2621
Make Busy Arrangements - per line		$2.9488	$0.0000	$0.0507	$0.0029	$0.0120	$0.0627	$0.0028	$0.0655
Message Center - per main station line		$0.0000	$0.0000	$0.0000	$0.0000	$0.0000	$0.0000	$0.0000	$0.0000
Message Waiting Indication Audible/Visual		$2.2079	$0.0000	$0.0380	$0.0021	$0.0090	$0.0470	$0.0021	$0.0491
Message Waiting Visual		$2.2079	$0.0000	$0.0380	$0.0021	$0.0090	$0.0470	$0.0021	$0.0491
Music On Hold - per system		$936.4626	$0.0000	$16.0985	$0.9054	$3.8146	$19.9131	$0.8995	$20.8125
Network Speed Call		$0.0126	$0.0000	$0.0002	$0.0000	$0.0001	$0.0003	$0.0000	$0.0003
Night Service Arrangement		$0.0649	$0.0000	$0.0011	$0.0001	$0.0003	$0.0014	$0.0001	$0.0014
Outgoing Calls Barred		$0.0220	$0.0000	$0.0004	$0.0000	$0.0001	$0.0005	$0.0000	$0.0005
Outgoing Trunk Queuing		$2.2812	$0.0000	$0.0392	$0.0022	$0.0093	$0.0485	$0.0022	$0.0507
Privacy Release		$0.1295	$0.0000	$0.0022	$0.0001	$0.0005	$0.0028	$0.0001	$0.0029
Query Time		$7.1043	$0.0000	$0.1221	$0.0069	$0.0289	$0.1511	$0.0068	$0.1579
Speed Calling 1 Digit Controller		$0.3720	$0.0000	$0.0064	$0.0004	$0.0015	$0.0079	$0.0004	$0.0083
Speed Calling 1 Digit User		$0.3720	$0.0000	$0.0064	$0.0004	$0.0015	$0.0079	$0.0004	$0.0083
Speed Calling 1# List Individual		$0.3720	$0.0000	$0.0064	$0.0004	$0.0015	$0.0079	$0.0004	$0.0083
Speed Calling 2 Digit Controller		$0.3720	$0.0000	$0.0064	$0.0004	$0.0015	$0.0079	$0.0004	$0.0083
Speed Calling 2 Digit User		$0.3720	$0.0000	$0.0064	$0.0004	$0.0015	$0.0079	$0.0004	$0.0083

State: South Dakota

Description	USOC	Loaded Investment	Direct Expense	Total Direct	Network Support	Directly Attributed	TELRIC	Common	TELRIC + Common
Speed Calling 2# List Individual		$0.3720	$0.0000	$0.0064	$0.0004	$0.0015	$0.0079	$0.0004	$0.0083
Speed Calling 30 Number		$0.3720	$0.0000	$0.0064	$0.0004	$0.0015	$0.0079	$0.0004	$0.0083
Speed Calling 8 Number		$0.3720	$0.0000	$0.0064	$0.0004	$0.0015	$0.0079	$0.0004	$0.0083
Station Camp-On Service - per main station		$346.3396	$0.0000	$5.9538	$0.3349	$1.4108	$7.3646	$0.3327	$7.6973
Station Dial Conferencing (6 Way)		$67.0389	$0.0000	$1.1525	$0.0648	$0.2731	$1.4255	$0.0644	$1.4899
Station Message Detail Recording (SMDR)		$1.4371	$0.0524	$0.0804	$0.0045	$0.0190	$0.0994	$0.0045	$0.1039
Three Way Calling		$10.5492	$0.0000	$0.1813	$0.0102	$0.0430	$0.2243	$0.0101	$0.2345
Time and Date Display		$4.3995	$0.0000	$0.0756	$0.0043	$0.0179	$0.0936	$0.0042	$0.0978
Time of Day Control for ARS - per system		$0.0000	$0.0000	$0.0000	$0.0000	$0.0000	$0.0000	$0.0000	$0.0000
Time of Day NCOS Update		$0.2302	$0.0000	$0.0040	$0.0002	$0.0009	$0.0049	$0.0002	$0.0051
Time of Day Routing - per line		$2.4541	$0.0000	$0.0422	$0.0024	$0.0100	$0.0522	$0.0024	$0.0545
Toll Restriction Service		$0.2093	$0.0000	$0.0036	$0.0002	$0.0009	$0.0045	$0.0002	$0.0047
Trunk Answer Any Station		$0.0649	$0.0000	$0.0011	$0.0001	$0.0003	$0.0014	$0.0001	$0.0014
Trunk Verification from Designated Station		$0.0000	$0.0000	$0.0000	$0.0000	$0.0000	$0.0000	$0.0000	$0.0000
UCD in hunt group - per line		$334.9949	$0.0000	$5.7588	$0.3239	$1.3646	$7.1234	$0.3218	$7.4451
UCD with Music After Delay		$220.7583	$0.0000	$3.7950	$0.2134	$0.8992	$4.6942	$0.2120	$4.9063

Lines Totals - SD

Lines from Release0201A - Data from Jan2000

Growth Rate 2.7826

CLLI Code	Office Name	State	Number of Working Lines - Jan 2000	Number of Working Lines Jan 2001
ABRDSDCO22E	ABERDEEN	SD	20091	20650.05217
ABRDSDCORS2	ABERDEEN ISDN	SD	1781	1830.558106
ARTNSDCORS1	ARLINGTON	SD	1206	1239.558156
BLFRSDCORS1	BELLE FOURCHE	SD	3709	3812.206634
BLHKSDCERS1	BLACKHAWK	SD	3987	4097.942262
CAVRSDCORS1	CAVOUR	SD	277	284.707802
CHBLSDCORS1	CHAMBERLAIN	SD	2253	2315.691978
CLMNSDCORS1	COLMAN	SD	641	658.836466
CNTNSDCORS1	CANTON	SD	1315	1351.59119
DDWDSDCORS1	DEADWOOD	SD	2524	2594.232824
DESMSDCORS1	DESMET	SD	1083	1113.135558
ELPNSDCORS1	ELK POINT	SD	1033	1061.744258
FLNDSDCORS1	FLANDREAU	SD	2172	2232.438072
FTPRSDCERS1	FORT PIERRE	SD	1516	1558.184216
HLCYSDCORS1	HILL CITY	SD	1815	1865.50419
HRBGSDCORS1	HARRISBURG	SD	1011	1039.132086
HURNSDCODS0	HURON	SD	0	0
HURNSDCODS1	HURON	SD	9213	9469.360938
IRQSSDCORS1	IROQUOIS	SD	371	381.323446
LEADSDCORS1	LEAD	SD	2738	2814.187588
LKPRSDCORS1	LAKE PRESTON	SD	732	752.368632
MCINSDCODS0	MCINTOSH	SD	271	278.540846
MDSNSDCERS1	MADISON	SD	5606	5761.992556
MLBNSDCORS1	MILBANK	SD	3524	3622.058824
MLLRSDCORS1	MILLER	SD	1586	1630.132036
MRTWSDCORS2	Morristown	SD	234	240.511284
MTCHSDCODS1	MITCHELL	SD	10771	11070.71385
MTCHSDCORS1	MITCHELL	SD	320	328.90432
PIRRSDCODS6	PIERRE	SD	14066	14457.40052
RDFDSDCORS1	REDFIELD	SD	2903	2983.778878
RDFDSDCORS4	REDFIELD	SD	2903	2983.778878
RPCYSDCODS1	RAPID CITY IDSN	SD	46173	47457.8099
RPVYSDCORS1	RAPID VALLEY	SD	3448	3543.944048
SPRFSDCORS1	SPEARFISH	SD	7994	8216.441044
STRGSDCORS1	STURGIS	SD	5205	5349.83433
SXFLSDCO33A	SIOUX FALLS	SD	58503	60130.90448
SXFLSDCODS0	SIOUX FALLS	SD	0	0
SXFLSDCODS1	SXFL MA OSPS/ISDN	SD	8741	8984.227066
SXFLSDSERS1	SIOUX FALLS-SE	SD	4149	4264.450074
SXFLSDSWRS1	SIOUX FALLS-SW	SD	12392	12736.81979
TEA-SDCORS1	TEA	SD	1111	1141.914686

Lines from Release0201A - Data from Jan2000

Growth Rate **2.7826**

CLLI Code	Office Name	State	Number of Working Lines - Jan 2000	Number of Working Lines Jan 2001
TMLKSDCORS2	Timberlake	SD	515	529.33039
VOLGSDCORS1	VOLGA	SD	1295	1331.03467
VRMLSDCORS1	VERMILLION	SD	8734	8977.032284
WHWDSDCORS1	WHITEWOOD	SD	637	654.725162
WRWKSDCORS1	WARWICK	SD	3924	4033.189224
WTTWSDCODS0	WATERTOWN	SD	15200	15622.9552
WTTWSDCODS1	WATERTOWN HOST	SD	0	0
YNTNSDCODS1	YANKTON	SD	9417	9679.037442
	Total Lines SD			297134.2183

Output developed in the Switching Features Cost Model (SCM) is contained in a project file. For this study, the source project file is called **SCM9.21 Final SGAT Feat 07-01rev.xls,SCM9.21 UCD Feat 07-01,SCM9.21 CustRng2nd 07-01.xls,SCM9.21 CustRng3rd 07-01.xls**
Authorized users will have access to the Switching Features Cost Module as an executable file named **Scmfeat9.exe**
The project file can be opened within this module so that the investment components of the switch feature can be fully evaluated.

MODEL DESCRIPTIONS

1. QWEST SWITCHING COST MODEL:

The Switching Cost Model (SCM) is a set of menu driven PC engineering cost models developed in the QWEST Service Costs and Economic Analysis organization (SCEA). SCM provides unit investments for various services and features provided by the DMS-10, DMS-100, DMS-200, DMS-100/200, and 5ESS switching equipment. The model has a Features module which provides unit investments for features (e.g., Custom Calling, MVP, Centrex).

SCM Core is the first of three major processes in the SCM Model. SCM Core determines the Average Busy Season, Busy Hour, unit investments by functional category. Other models use the Busy Hour investments as input. The SCM Calls process of the model calculates investments for call setup and conversation CCS. The SCM Features process of the model calculates unit investments for central office features.

The SCM Features process develops investments for features by using the functional category unit investments created in SCM Core along with inputs provided by the SCM Features model user. There is an investment developed for each part of the feature, for example, activation, deactivation, and call attempt. The SCM Features process determines ABSBH investment associated with a feature by partitioning the feature into its components and determining the components not recovered by other rate elements. Cost of the feature must cover those components not recovered by other rate elements. The subscribers busy hour use of the feature drives the investments required. SCM displays most feature costs as an investment per line, consistent with the rate plans for the features. The investments provided also contain investment loadings from WINPC3 of Power, Sales Tax, TELCO, and Interest During Construction.

The Switching Cost Model (SCM) provides QWEST with a flexible and consistent process to provide switching costs suitable to develop price floors. SCM applies long run incremental costing principles for cost development, with consideration given to anticipated long run demand. This approach yields costs that are an appropriate price floor, allowing QWEST to make proper pricing decisions for its services.

2. Retail Cost Program (RCP):

The Retail Cost Program (RCP) develops retail costs from investments and/or expenses associated with QWEST products and services.

The RCP will apply investment loadings and annual cost factors, as applicable, to an investment and/or expense. The program calculates Direct Costs (TSLRIC), Network Support Costs, Attributable Costs, and Fully Allocated Costs resulting from an investment or expense.

Model Definitions

SCM Definitions:

INVESTMENT: An investment is the amount of capital used to purchase equipment and material to provide a service.

ENGINEERED FURNISHED & INSTALLED (EF&I): An Engineered, Furnished and Installed investment includes installation by the Vendor: An EF&I investment includes a dollar amount for the equipment, material, engineering, furnishing (delivery and/or supply) and installation.

TOTAL INSTALLED INVESTMENT (TII): A TII investment includes a dollar amount for equipment, material, engineering, furnishing & installation as well as a dollar amount (if applicable) for Power, Sales Tax, Telco labor and Interest During Construction (IDC).

RCP Definitions:

EXPENSE: An expense is the amount of non-capitalized dollars associated with the provision of a product or service.

INFLATION: Inflation is an increase in the amount of an investment from a base year to the study year. Inflation results from increases in the cost of money, material, or any other items impacting the value of an investment. The model can apply inflation to EF&I or Total Installed investments.

LOADING FACTORS: Loading factors applied to an EF&I investment provide the additional dollar amounts to bring an EF&I investment to the Total Installed Investment level.

POWER: The power factor estimates the investment required for Central Office back up power equipment (used for EF&I Central Office Equipment [COE] accounts only).

SALES TAX: The sales tax factor provides the amount of sales tax paid on vendor provided material and equipment (used for all accounts).

TELCO: The TELCO factor develops the dollar amount of Qwest engineering and labor involved with vendor installation (used for EF&I accounts only).

INTEREST DURING CONSTRUCTION: The interest during construction factor estimates the amount of interest that accrues on construction dollar amounts until completion (used with all accounts).

LAND & BUILDING: The land and building factors applied to a Total Installed Central Office equipment investment recovers the investment in Central Office land and buildings. Annual cost factors are applicable to the land and building investments (used with COE accounts only).

ANNUAL COST FACTORS: Annual cost factors identify the annual costs associated with Total Installed Investments. There are two types of Annual Cost Factors (Investment based and Expense based). Annual cost factors are appropriate for use with all accounts.

INVESTMENT BASED FACTORS: Investment based annual cost factors applied to a Total Installed Investment identify annual costs directly related to the use of an investment.

MAINTENANCE COSTS: Maintenance costs represent the cost of upkeep, trunk and line testing, rearrangements and changes.

CAPITAL COSTS (CAPCOST): Capital costs are annual or monthly costs associated with recovery of a total installed investment.

AD VALOREM TAX: The ad valorem factor estimates the annual "property tax" applicable to an investment.

EXPENSE BASED FACTORS: These factors applied to an expense created by the Investment Based Factors will

identify additional expenses resulting from the provision of a service.

SALES EXPENSE: The sales expense factor determines the amount of expense associated with making a sale. It develops the relevant expense pertaining to the cost of a sale up to the "hand shake" as well as a portion of capital costs. We divide this expense by total direct cost.

PRODUCT MANAGEMENT EXPENSE: The product management factor develops the amount of expense associated with managing the products of the business. This expense includes all expense relevant to Product Management, as well as a portion of capital costs. We divide this expense by total direct cost.

ADMINISTRATION: The administration expense factor develops the administration expense associated with COE, Outside Plant (OSP), and coin services.

SALES COMPENSATION EXPENSE: The sales compensation factor develops the amount of sales compensation resulting from successfully completing a business sale. This is a revenue based factor that includes compensation for business sales only. We divide sales compensation by total business revenues.

RIGHT TO USE FEES: The right to use (RTU) fees factor estimates some of the software expense associated with the purchase of digital switches.

BUSINESS FEES: The business fees factor develops a dollar amount associated with state fees and taxes assessed on the aggregate revenue of those states that impose such fees and taxes.

COMMON: Common calculates expenses common to the firm.

To generate the investment results in this workbook, do as follows:

Run SCMFEAT9.exe
In the 'Type Of Data' list box, select the correct data directory
In the 'Keep States Separate' box, select 'Yes'
In the 'Weight Hosts & Remotes Together' box, select 'Yes'
In the Investment Types box check the 'Direct - Category 1' and 'Direct - Category 2' boxes

In the 'Data Files' box, highlight SSW101A1.MDB
In the list box in the upper right part of the screen, highlight QC 01 POTS STD H
Press the 'Update Studies in Project' button

In the 'Data Files' box, highlight SSW201A1.MDB
In the list box in the upper right part of the screen, highlight QC 01 POTS STD H
Press the 'Update Studies in Project' button

In the 'Data Files' box, highlight SSW301A1.MDB
In the list box in the upper right part of the screen, highlight QC 01 POTS STD H
Press the 'Update Studies in Project' button

In the 'Feature Group' list box, select 'BASIC CENTRON'
In the 'Feature Name' list box, select 'Dial 0'
In the 'Label Used on Outputs' box, select 'Line'
In the 'Feature Inputs' list box, select 'Busy Hour Dial 0 Call Attempts per Dial 0 Line'
In the 'Enter New Input' box, enter '0.58' and click OK
Click the 'Add or Modify Feature in Project' button

In the 'Feature Group' list box, select 'BASIC CENTRON'
In the 'Feature Name' list box, select 'Direct Inward Dialing'
In the 'Label Used on Outputs' box, select 'Line'
In the 'Feature Inputs' list box, select 'Busy Hour DID Call Attempts per DID Line'
In the 'Enter New Input' box, enter '1.456' and click OK
Click the 'Add or Modify Feature in Project' button

In the 'Feature Group' list box, select 'CENTRON'
In the 'Feature Name' list box, select 'Automatic Route Selection - Circuit Switched Voice - Time of Day Routing'
In the 'Label Used on Outputs' box, select 'Line'
In the 'Feature Inputs' list box, select 'Busy Hour Automatic Route Selection Attempts per ARS Line'
In the 'Enter New Input' box, enter '1' and click OK
Click the 'Add or Modify Feature in Project' button

In the 'Feature Group' list box, select 'CENTRON'
In the 'Feature Name' list box, select 'Call Forward - Reason Display'
In the 'Label Used on Outputs' box, select 'Line'
In the 'Feature Inputs' list box, select 'Busy Hour Terminating CF-RD Call Attempts per CF-RD Line'
In the 'Enter New Input' box, enter '0.308' and click OK
Click the 'Add or Modify Feature in Project' button

In the 'Feature Group' list box, select 'CENTRON'

In the 'Feature Name' list box, select 'Called Name Display - Customer Activated'
In the 'Label Used on Outputs' box, select 'Line'
In the 'Feature Inputs' list box, select 'Busy Hour Activations per Calling Name Delivery Line'
In the 'Enter New Input' box, enter '0.0001' and click OK
In the 'Feature Inputs' list box, select 'BH Calling Name Delivery Term. Call Att's per CNAMD Line'
In the 'Enter New Input' box, enter '1.12' and click OK
In the 'Feature Inputs' list box, select 'Busy Hour Deactivations per Calling Name Delivery Line'
In the 'Enter New Input' box, enter '0.0001' and click OK
In the 'Feature Inputs' list box, select 'Percent of SW2 Lines with CND or BCLID or MWI or CNAMD'
In the 'Enter New Input' box, enter '25' and click OK
Click the 'Add or Modify Feature in Project' button

In the 'Feature Group' list box, select 'CENTRON'
In the 'Feature Name' list box, select 'Call Waiting - Originating'
In the 'Label Used on Outputs' box, select 'Line'
In the 'Feature Inputs' list box, select 'Busy Hour CW-Originating Call Attempts per CW-Originating Line'
In the 'Enter New Input' box, enter '0.075' and click OK
Click the 'Add or Modify Feature in Project' button

In the 'Feature Group' list box, select 'CENTRON'
In the 'Feature Name' list box, select 'Call Waiting - Terminating'
In the 'Label Used on Outputs' box, select 'Line'
In the 'Feature Inputs' list box, select 'Busy Hour CW-Terminating Call Attempts per CW-Terminating Line'
In the 'Enter New Input' box, enter '0.15' and click OK
Click the 'Add or Modify Feature in Project' button

In the 'Feature Group' list box, select 'CENTRON'
In the 'Feature Name' list box, select 'Data Call Protection'
In the 'Label Used on Outputs' box, select 'Line'
Click the 'Add or Modify Feature in Project' button

In the 'Feature Group' list box, select 'CENTRON'
In the 'Feature Name' list box, select 'Dial Call Waiting'
In the 'Label Used on Outputs' box, select 'Line'
In the 'Feature Inputs' list box, select 'Busy Hour Dial Call Waiting Call Attempts per DCW Line'
In the 'Enter New Input' box, enter '0.0075' and click OK
Click the 'Add or Modify Feature in Project' button

In the 'Feature Group' list box, select 'CENTRON'
In the 'Feature Name' list box, select 'Directed Call Pickup with Barge-in'
In the 'Label Used on Outputs' box, select 'Line'
In the 'Feature Inputs' list box, select 'Busy Hour DCPU-BI Call Attempts per DCPU-BI Line'
In the 'Enter New Input' box, enter '0.015' and click OK
In the 'Feature Inputs' list box, select 'DCPU-BI or Office Holding Time (CCS per Call)'
In the 'Enter New Input' box, enter '1.2' and click OK
Click the 'Add or Modify Feature in Project' button

In the 'Feature Group' list box, select 'CENTRON'
In the 'Feature Name' list box, select 'Distinctive Call Waiting'

In the 'Label Used on Outputs' box, select 'Line'
In the 'Feature Inputs' list box, select 'Busy Hour Distinctive CW Term. Call Attempts per DCWT Line'
In the 'Enter New Input' box, enter '0.001' and click OK
Click the 'Add or Modify Feature in Project' button

In the 'Feature Group' list box, select 'CENTRON'
In the 'Feature Name' list box, select 'Distinctive Ringing'
In the 'Label Used on Outputs' box, select 'Line'
In the 'Feature Inputs' list box, select 'Busy Hour Term. Call Attempts per Line with Distinctive Ringing'
In the 'Enter New Input' box, enter '0.5' and click OK
In the 'Feature Inputs' list box, select 'Percent of Term. Call Attempts that get Distinctive Ringing'
In the 'Enter New Input' box, enter '100' and click OK
Click the 'Add or Modify Feature in Project' button

In the 'Feature Group' list box, select 'CENTRON'
In the 'Feature Name' list box, select 'DSS - Busy Lamp Field for Business Set'
In the 'Label Used on Outputs' box, select 'Line'
In the 'Feature Inputs' list box, select 'Busy Hour DSS-BLF Call Attempts per Line'
In the 'Enter New Input' box, enter '52' and click OK
Click the 'Add or Modify Feature in Project' button

In the 'Feature Group' list box, select 'CENTRON'
In the 'Feature Name' list box, select 'Executive Busy Override - Originator'
In the 'Label Used on Outputs' box, select 'Line'
In the 'Feature Inputs' list box, select 'Busy Hour Executive Busy Override - Orig. Call Att. per EBO Line'
In the 'Enter New Input' box, enter '0.01' and click OK
Click the 'Add or Modify Feature in Project' button

In the 'Feature Group' list box, select 'CENTRON'
In the 'Feature Name' list box, select 'Expensive Route Warning Tone for ARS'
In the 'Label Used on Outputs' box, select 'Line'
In the 'Feature Inputs' list box, select 'Busy Hour ERWT Activations per Automatic Route Selection Line'
In the 'Enter New Input' box, enter '30' and click OK
Click the 'Add or Modify Feature in Project' button

In the 'Feature Group' list box, select 'CENTRON'
In the 'Feature Name' list box, select 'Facility Restriction Level Screening'
In the 'Label Used on Outputs' box, select 'Line'
In the 'Feature Inputs' list box, select 'Busy Hour FRL Screening Activations per FRL Screening Line'
In the 'Enter New Input' box, enter '60' and click OK
Click the 'Add or Modify Feature in Project' button

In the 'Feature Group' list box, select 'CENTRON'
In the 'Feature Name' list box, select 'Fast Transfer for MBS'
In the 'Label Used on Outputs' box, select 'Line'
In the 'Feature Inputs' list box, select 'Busy Hour Fast Transfer Attempts per Fast Transfer Line'
In the 'Enter New Input' box, enter '0.22' and click OK
Click the 'Add or Modify Feature in Project' button

In the 'Feature Group' list box, select 'CENTRON'
In the 'Feature Name' list box, select 'Group Intercom - All Calls'
In the 'Label Used on Outputs' box, select 'Line'
In the 'Feature Inputs' list box, select 'Busy Hour GIC-ALL Call Attempts per Line'
In the 'Enter New Input' box, enter '0.5' and click OK
Click the 'Add or Modify Feature in Project' button

In the 'Feature Group' list box, select 'CENTRON'
In the 'Feature Name' list box, select 'Group Intercom - Inter GIC Call'
In the 'Label Used on Outputs' box, select 'Line'
In the 'Feature Inputs' list box, select 'Busy Hour Dialed Intercom Attempts per Dialed Intercom Line'
In the 'Enter New Input' box, enter '0.5' and click OK
Click the 'Add or Modify Feature in Project' button

In the 'Feature Group' list box, select 'CENTRON'
In the 'Feature Name' list box, select 'Loudspeaker Paging - Analog Trunk'
In the 'Label Used on Outputs' box, select 'Line'
In the 'Feature Inputs' list box, select 'BH Terminating Call Attempts per Loudspeaker Paging Analog Trunk'
In the 'Enter New Input' box, enter '23' and click OK
In the 'Feature Inputs' list box, select 'Loudspeaker Paging Analog Trunk or Ofc. Holding Time (CCS/Call)'
In the 'Enter New Input' box, enter '0.087' and click OK
Click the 'Add or Modify Feature in Project' button

In the 'Feature Group' list box, select 'CENTRON'
In the 'Feature Name' list box, select 'Make Set Busy - Intragroup'
In the 'Label Used on Outputs' box, select 'Line'
In the 'Feature Inputs' list box, select 'Busy Hour MSB All Call Attempts per MSB Line'
In the 'Enter New Input' box, enter '2' and click OK
Click the 'Add or Modify Feature in Project' button

In the 'Feature Group' list box, select 'CENTRON'
In the 'Feature Name' list box, select 'Meet-Me Conference Large'
In the 'Label Used on Outputs' box, select 'Line'
In the 'Feature Inputs' list box, select 'Busy Hour Meet-Me Conference Call Attempts per Line'
In the 'Enter New Input' box, enter '0.02' and click OK
In the 'Feature Inputs' list box, select 'Meet-Me Conference or Office Holding Time (CCS per Call)'
In the 'Enter New Input' box, enter '15.667' and click OK
Click the 'Add or Modify Feature in Project' button

In the 'Feature Group' list box, select 'CENTRON'
In the 'Feature Name' list box, select 'Message Waiting Indication with SS7'
In the 'Label Used on Outputs' box, select 'Line'
In the 'Feature Inputs' list box, select 'Busy Hour MWI Activations per Message Waiting Indication Line'
In the 'Enter New Input' box, enter '0.072' and click OK
Click the 'Add or Modify Feature in Project' button

In the 'Feature Group' list box, select 'CENTRON'
In the 'Feature Name' list box, select 'Message Waiting Set'
In the 'Label Used on Outputs' box, select 'Line'

In the 'Feature Inputs' list box, select 'Busy Hour Message Waiting Retrieval Attempts per MWS Set'
In the 'Enter New Input' box, enter '0.5' and click OK
In the 'Feature Inputs' list box, select 'Busy Hour Message Waiting Call Attempts per MWS Set'
In the 'Enter New Input' box, enter '0.5' and click OK
Click the 'Add or Modify Feature in Project' button

In the 'Feature Group' list box, select 'CENTRON'
In the 'Feature Name' list box, select 'Music in Queue - Multi-Position Hunt Group'
In the 'Label Used on Outputs' box, select 'Line'
In the 'Feature Inputs' list box, select 'Avg. number of Lines within Group (for $/Line not $/System)'
In the 'Enter New Input' box, enter '10' and click OK
In the 'Feature Inputs' list box, select 'Busy Hour Music In Queue - MUPH Attempts per MUPH Line'
In the 'Enter New Input' box, enter '13' and click OK
Click the 'Add or Modify Feature in Project' button

In the 'Feature Group' list box, select 'CENTRON'
In the 'Feature Name' list box, select 'Music On Hold - Digital Trunk'
In the 'Label Used on Outputs' box, select 'Line'
In the 'Feature Inputs' list box, select 'Avg. number of Lines within Group (for $/Line not $/System)'
In the 'Enter New Input' box, enter '10' and click OK
In the 'Feature Inputs' list box, select 'Busy Hour Music On Hold Attempts per MOH Line/System'
In the 'Enter New Input' box, enter '134' and click OK
Click the 'Add or Modify Feature in Project' button

In the 'Feature Group' list box, select 'CENTRON'
In the 'Feature Name' list box, select 'Music On Hold for P-Phones'
In the 'Label Used on Outputs' box, select 'Line'
In the 'Feature Inputs' list box, select 'Busy Hour Music On Hold Attempts per MOH Line'
In the 'Enter New Input' box, enter '0.001' and click OK
In the 'Feature Inputs' list box, select 'Average Office Holding Time (CCS per Call)'
In the 'Enter New Input' box, enter '1.2' and click OK
Click the 'Add or Modify Feature in Project' button

In the 'Feature Group' list box, select 'CENTRON'
In the 'Feature Name' list box, select 'Network Speed Call'
In the 'Label Used on Outputs' box, select 'Line'
In the 'Feature Inputs' list box, select 'Busy Hour Network Speed Call Attempts per NSC Line'
In the 'Enter New Input' box, enter '0.02' and click OK
Click the 'Add or Modify Feature in Project' button

In the 'Feature Group' list box, select 'CENTRON'
In the 'Feature Name' list box, select 'Preset Conference'
In the 'Label Used on Outputs' box, select 'Line'
In the 'Feature Inputs' list box, select 'Busy Hour Preset Conference Call Attempts per PSC Line'
In the 'Enter New Input' box, enter '0.025' and click OK
In the 'Feature Inputs' list box, select 'Preset Conference or Office Holding Time (CCS per Call)'
In the 'Enter New Input' box, enter '15.667' and click OK
Click the 'Add or Modify Feature in Project' button

In the 'Feature Group' list box, select 'CENTRON'
In the 'Feature Name' list box, select 'Station Camp On for Meridian Business Sets'
In the 'Label Used on Outputs' box, select 'Line'
In the 'Feature Inputs' list box, select 'Busy Hour Camp On Call Attempts per Camp On Line'
In the 'Enter New Input' box, enter '10' and click OK
In the 'Feature Inputs' list box, select 'Average Office Holding Time (CCS per Call)'
In the 'Enter New Input' box, enter '1.2' and click OK
Click the 'Add or Modify Feature in Project' button

In the 'Feature Group' list box, select 'POTS'
In the 'Feature Name' list box, select 'Three Way Calling'
In the 'Label Used on Outputs' box, select 'Line'
In the 'Feature Inputs' list box, select 'Busy Hour 3WC Call Attempts per 3WC Line'
In the 'Enter New Input' box, enter '0.0481' and click OK
In the 'Feature Inputs' list box, select '3WC or Office Holding Time (CCS per Call)'
In the 'Enter New Input' box, enter '0.36' and click OK
Click the 'Add or Modify Feature in Project' button

In the 'Feature Group' list box, select 'CENTRON'
In the 'Feature Name' list box, select 'Time of Day NCOS'
In the 'Label Used on Outputs' box, select 'Line'
In the 'Feature Inputs' list box, select 'Busy Hour TOD - NCOS Term. Call Attempts Line'
In the 'Enter New Input' box, enter '0.67' and click OK
Click the 'Add or Modify Feature in Project' button

In the 'Feature Group' list box, select 'CENTRON'
In the 'Feature Name' list box, select 'Trunk Answer Any Station'
In the 'Label Used on Outputs' box, select 'Line'
In the 'Feature Inputs' list box, select 'Busy Hour Trunk Answer Any Station Call Attempts per TAAS Line'
In the 'Enter New Input' box, enter '0.01' and click OK
Click the 'Add or Modify Feature in Project' button

In the 'Feature Group' list box, select 'CENTRON'
In the 'Feature Name' list box, select 'Trunk Verification From a Designated Station'
In the 'Label Used on Outputs' box, select 'Line'
Click the 'Add or Modify Feature in Project' button

In the 'Feature Group' list box, select 'EBS'
In the 'Feature Name' list box, select 'Business Set Call Forward on a per Key Basis'
In the 'Label Used on Outputs' box, select 'Line'
In the 'Feature Inputs' list box, select 'Busy Hour Activations per CFK Line'
In the 'Enter New Input' box, enter '0.0358' and click OK
In the 'Feature Inputs' list box, select 'Busy Hour CFK Call Attempts per CFK Line'
In the 'Enter New Input' box, enter '0.104' and click OK
In the 'Feature Inputs' list box, select 'Busy Hour Deactivations per CFK Line'
In the 'Enter New Input' box, enter '0.0358' and click OK
Click the 'Add or Modify Feature in Project' button

In the 'Feature Group' list box, select 'EBS'

In the 'Feature Name' list box, select 'Business Set Inspect Key'
In the 'Label Used on Outputs' box, select 'Line'
In the 'Feature Inputs' list box, select 'Busy Hour Inspect Attempts per Inspect Line'
In the 'Enter New Input' box, enter '0.001' and click OK
Click the 'Add or Modify Feature in Project' button

In the 'Feature Group' list box, select 'EBS'
In the 'Feature Name' list box, select 'Key Short Hunt'
In the 'Label Used on Outputs' box, select 'Line'
In the 'Feature Inputs' list box, select 'Busy Hour Key Short Hunt Term. Call Attempts per EBS Line'
In the 'Enter New Input' box, enter '0.5' and click OK
Click the 'Add or Modify Feature in Project' button

In the 'Feature Group' list box, select 'EBS'
In the 'Feature Name' list box, select 'Multiple Executive Message Waiting Keys per DN'
In the 'Label Used on Outputs' box, select 'Line'
In the 'Feature Inputs' list box, select 'Busy Hour Mult Exec Msg Wtg Key Call Attempts per DN Line'
In the 'Enter New Input' box, enter '0.5' and click OK
Click the 'Add or Modify Feature in Project' button

In the 'Feature Group' list box, select 'EBS'
In the 'Feature Name' list box, select 'Origination/Termination Line Select - Idle Line Select'
In the 'Label Used on Outputs' box, select 'Line'
In the 'Feature Inputs' list box, select 'Busy Hour Originating Line Select Attempts per DN Line'
In the 'Enter New Input' box, enter '1.12' and click OK
Click the 'Add or Modify Feature in Project' button

In the 'Feature Group' list box, select 'EBS'
In the 'Feature Name' list box, select 'Origination/Termination Line Select - Incoming Call Select'
In the 'Label Used on Outputs' box, select 'Line'
In the 'Feature Inputs' list box, select 'Busy Hour Terminating Call Select Attempts per DN Line'
In the 'Enter New Input' box, enter '0.96' and click OK
Click the 'Add or Modify Feature in Project' button

In the 'Feature Group' list box, select 'EBS'
In the 'Feature Name' list box, select 'Origination/Termination Line Select - No Line Select'
In the 'Label Used on Outputs' box, select 'Line'
In the 'Feature Inputs' list box, select 'Busy Hour Terminating No Line Select Attempts per DN Line'
In the 'Enter New Input' box, enter '1.12' and click OK
Click the 'Add or Modify Feature in Project' button

In the 'Feature Group' list box, select 'FCC'
In the 'Feature Name' list box, select 'Calling Number Delivery (ICLID) - Permanent'
In the 'Label Used on Outputs' box, select 'Line'
In the 'Feature Inputs' list box, select 'Busy Hour CND Term. Call Attempts per CND Line'
In the 'Enter New Input' box, enter '0.96' and click OK
In the 'Feature Inputs' list box, select 'Percent of SW2 Lines with CND or BCLID or MWI or CNAMD'
In the 'Enter New Input' box, enter '25' and click OK
Click the 'Add or Modify Feature in Project' button

In the 'Feature Group' list box, select 'ISDN FEATURES'
In the 'Feature Name' list box, select 'System Music On Hold - Digital Trunk'
In the 'Label Used on Outputs' box, select 'Line'
In the 'Feature Inputs' list box, select 'Avg. number of Lines within Group (for $/Line not $/System)'
In the 'Enter New Input' box, enter '1' and click OK
In the 'Feature Inputs' list box, select 'Busy Hour System Music On Hold Attempts per SMOH Line/System'
In the 'Enter New Input' box, enter '134' and click OK
Click the 'Add or Modify Feature in Project' button

In the 'Feature Group' list box, select 'ISDN FEATURES'
In the 'Feature Name' list box, select 'Automatic Callback Calling/Ring Again'
In the 'Label Used on Outputs' box, select 'Line'
In the 'Feature Inputs' list box, select 'Busy Hour Ring Again Call Attempts per Ring Again Line'
In the 'Enter New Input' box, enter '0.001' and click OK
In the 'Feature Inputs' list box, select 'Busy Hour Ring Again Deactvations per Ring Again Line'
In the 'Enter New Input' box, enter '0.0001' and click OK
Click the 'Add or Modify Feature in Project' button

In the 'Feature Group' list box, select 'MODEL'
In the 'Feature Name' list box, select 'Hot Line'
In the 'Label Used on Outputs' box, select 'Line'
In the 'Feature Inputs' list box, select 'Busy Hour Hot Line Attempts per Line'
In the 'Enter New Input' box, enter '1' and click OK
Click the 'Add or Modify Feature in Project' button

In the 'Feature Group' list box, select 'MODEL'
In the 'Feature Name' list box, select 'Account Codes'
In the 'Label Used on Outputs' box, select 'Line'
In the 'Feature Inputs' list box, select 'Busy Hour Account Code Call Attempts per Line'
In the 'Enter New Input' box, enter '155' and click OK
Click the 'Add or Modify Feature in Project' button

In the 'Feature Group' list box, select 'MODEL'
In the 'Feature Name' list box, select 'Authorization Codes'
In the 'Label Used on Outputs' box, select 'Line'
In the 'Feature Inputs' list box, select 'Busy Hour Authorization Code Call Attempts per Line'
In the 'Enter New Input' box, enter '40' and click OK
Click the 'Add or Modify Feature in Project' button

In the 'Feature Group' list box, select 'MODEL'
In the 'Feature Name' list box, select 'Privacy Release'
In the 'Label Used on Outputs' box, select 'Line'
In the 'Feature Inputs' list box, select 'Busy Hour Privacy Release Call Attempts per MADN SCA Private Line'
In the 'Enter New Input' box, enter '0.01' and click OK
In the 'Feature Inputs' list box, select 'Holding time per Privacy Release Call'
In the 'Enter New Input' box, enter '1.2' and click OK
In the 'Feature Inputs' list box, select 'Percentage of Calls that Bridge after PR Activated'
In the 'Enter New Input' box, enter '10' and click OK

Click the 'Add or Modify Feature in Project' button

In the 'Feature Group' list box, select 'MODEL'
In the 'Feature Name' list box, select 'Query Time'
In the 'Label Used on Outputs' box, select 'Line'
In the 'Feature Inputs' list box, select 'Busy Hour Activations per Query Time Call'
In the 'Enter New Input' box, enter '1.2' and click OK
In the 'Feature Inputs' list box, select 'Busy Hour Query Time Call Attempts per'
In the 'Enter New Input' box, enter '0.05' and click OK
Click the 'Add or Modify Feature in Project' button

In the 'Feature Group' list box, select 'MODEL'
In the 'Feature Name' list box, select 'Uniform Call Distribution'
In the 'Label Used on Outputs' box, select 'Line'
In the 'Feature Inputs' list box, select 'Busy Hour per UCD Call Attempts per UCD Line'
In the 'Enter New Input' box, enter '26' and click OK
Click the 'Add or Modify Feature in Project' button

In the 'Feature Group' list box, select 'TRUNK'
In the 'Feature Name' list box, select 'Digital Private Facilities Acc-Origination Ofc (L-T)'
In the 'Label Used on Outputs' box, select 'Line'
In the 'Feature Inputs' list box, select 'BH Originating Private Facility Access Att's/Private Fac Trunk'
In the 'Enter New Input' box, enter '5.54' and click OK
In the 'Feature Inputs' list box, select 'Number of Digits in Private Facility Access Code'
In the 'Enter New Input' box, enter '3' and click OK
In the 'Feature Inputs' list box, select 'Average Number of Digits Dialed after PF Access Code'
In the 'Enter New Input' box, enter '6.5' and click OK
In the 'Feature Inputs' list box, select 'Private Facility Access or Office Holding Time (CCS per Call)'
In the 'Enter New Input' box, enter '1.8' and click OK
In the 'Feature Inputs' list box, select 'Average Number of Outpulsed Digits Dialed after PF Access Code'
In the 'Enter New Input' box, enter '0' and click OK
Click the 'Add or Modify Feature in Project' button

In the 'Feature Group' list box, select 'TRUNK'
In the 'Feature Name' list box, select 'Digital Private Facilities Acc-Termination Ofc (T-L)'
In the 'Label Used on Outputs' box, select 'Line'
In the 'Feature Inputs' list box, select 'BH Terminating Private Facility Access Att's/Private Fac Trunk'
In the 'Enter New Input' box, enter '5.54' and click OK
In the 'Feature Inputs' list box, select 'Private Facility Access or Office Holding Time (CCS per Call)'
In the 'Enter New Input' box, enter '1.8' and click OK
In the 'Feature Inputs' list box, select 'Average Number of Digits Inpulsed to Terminating Office'
In the 'Enter New Input' box, enter '6.58' and click OK
Click the 'Add or Modify Feature in Project' button

In the 'Feature Group' list box, select 'TRUNK'
In the 'Feature Name' list box, select 'Digital Facility Termination (DS1)'
In the 'Label Used on Outputs' box, select 'Line'
Click the 'Add or Modify Feature in Project' button

In the 'Feature Group' list box, select 'POTS'
In the 'Feature Name' list box, select 'Speed Call Long - Customer Changeable'
In the 'Label Used on Outputs' box, select 'Line'
In the 'Feature Inputs' list box, select 'Busy Hour Activations per SCL Line'
In the 'Enter New Input' box, enter '0.0001' and click OK
In the 'Feature Inputs' list box, select 'Busy Hour Speed Call Attempts per SCL Line'
In the 'Enter New Input' box, enter '0.0703' and click OK
Click the 'Add or Modify Feature in Project' button

In the 'Feature Group' list box, select 'POTS'
In the 'Feature Name' list box, select 'Call Forwarding-Busy Line - IEO Customer NonChangeable'
In the 'Label Used on Outputs' box, select 'Line'
In the 'Feature Inputs' list box, select 'Busy Hour IEO CF-BL Call Attempts per IEO CF-BL Line'
In the 'Enter New Input' box, enter '0.15' and click OK
Click the 'Add or Modify Feature in Project' button

In the 'Feature Group' list box, select 'POTS'
In the 'Feature Name' list box, select 'Call Forwarding-Don't Answer: IEO Customer NonChangeable'
In the 'Label Used on Outputs' box, select 'Line'
In the 'Feature Inputs' list box, select 'Busy Hour IEO CF-DA Call Attempts per IEO CF-DA Line'
In the 'Enter New Input' box, enter '0.2821' and click OK
Click the 'Add or Modify Feature in Project' button

In the 'Feature Group' list box, select 'CENTRON'
In the 'Feature Name' list box, select 'Call Hold'
In the 'Label Used on Outputs' box, select 'Line'
In the 'Feature Inputs' list box, select 'Busy Hour Call Hold Call Attempts per Call Hold Line'
In the 'Enter New Input' box, enter '0.018' and click OK
Click the 'Add or Modify Feature in Project' button

In the 'Feature Group' list box, select 'CENTRON'
In the 'Feature Name' list box, select 'Call Park Retrieve'
In the 'Label Used on Outputs' box, select 'Line'
In the 'Feature Inputs' list box, select 'Busy Hour Call Park Call Attempts per Call Park Line'
In the 'Enter New Input' box, enter '0.01' and click OK
Click the 'Add or Modify Feature in Project' button

In the 'Feature Group' list box, select 'CENTRON'
In the 'Feature Name' list box, select 'Call Park Store'
In the 'Label Used on Outputs' box, select 'Line'
In the 'Feature Inputs' list box, select 'Busy Hour Call Park Call Attempts per Call Park Line'
In the 'Enter New Input' box, enter '0.01' and click OK
In the 'Feature Inputs' list box, select 'Call Park or Office Holding Time (CCS per Call)'
In the 'Enter New Input' box, enter '1.2' and click OK
Click the 'Add or Modify Feature in Project' button

In the 'Feature Group' list box, select 'CENTRON'
In the 'Feature Name' list box, select 'Call Pickup'
In the 'Label Used on Outputs' box, select 'Line'

In the 'Feature Inputs' list box, select 'Busy Hour Call Pickup Call Attempts per Call Pickup Line'
In the 'Enter New Input' box, enter '0.0328' and click OK
Click the 'Add or Modify Feature in Project' button

In the 'Feature Group' list box, select 'CENTRON'
In the 'Feature Name' list box, select 'Message Waiting Indication Audible/Visual'
In the 'Label Used on Outputs' box, select 'Line'
In the 'Feature Inputs' list box, select 'Busy Hour MWI Activations per Message Waiting Indication Line'
In the 'Enter New Input' box, enter '0.2145' and click OK
Click the 'Add or Modify Feature in Project' button

In the 'Feature Group' list box, select 'CENTRON'
In the 'Feature Name' list box, select 'Station Dial Conferencing'
In the 'Label Used on Outputs' box, select 'Line'
In the 'Feature Inputs' list box, select 'Busy Hour Station Dial Conference Call Attempts per SDC Line'
In the 'Enter New Input' box, enter '0.1' and click OK
In the 'Feature Inputs' list box, select 'Station Dial Conference or Office Holding Time (CCS per Call)'
In the 'Enter New Input' box, enter '15.667' and click OK
Click the 'Add or Modify Feature in Project' button

In the 'Feature Group' list box, select 'CLASS'
In the 'Feature Name' list box, select 'Call Waiting ID (Name & Number with SS7)'
In the 'Label Used on Outputs' box, select 'per Line'
In the 'Feature Inputs' list box, select 'Busy Hour Term. Call Attempts per Calling Name Delivery Line'
In the 'Enter New Input' box, enter '0.08' and click OK
Click the 'Add or Modify Feature in Project' button

In the 'Feature Group' list box, select 'CLASS'
In the 'Feature Name' list box, select 'Calling Number Delivery - IEO Permanent'
In the 'Label Used on Outputs' box, select 'Line'
In the 'Feature Inputs' list box, select 'Busy Hour IEO CND Term. Call Attempts per IEO CND Line'
In the 'Enter New Input' box, enter '1' and click OK
In the 'Feature Inputs' list box, select 'Percent of SW2 Lines with CND or BCLID or MWI or CNAMD'
In the 'Enter New Input' box, enter '10.1936' and click OK
Click the 'Add or Modify Feature in Project' button

In the 'Feature Group' list box, select 'CLASS'
In the 'Feature Name' list box, select 'Calling Number Delivery Blocking - IAO'
In the 'Label Used on Outputs' box, select 'Line'
In the 'Feature Inputs' list box, select 'Busy Hour CNDB Call Attempts per CNDB Line'
In the 'Enter New Input' box, enter '1.2' and click OK
Click the 'Add or Modify Feature in Project' button

In the 'Feature Group' list box, select 'CLASS'
In the 'Feature Name' list box, select 'Calling Number Delivery Blocking - IEO'
In the 'Label Used on Outputs' box, select 'Line'
In the 'Feature Inputs' list box, select 'Busy Hour CNDB Call Attempts per CNDB Line'
In the 'Enter New Input' box, enter '1.2' and click OK
Click the 'Add or Modify Feature in Project' button

In the 'Feature Group' list box, select 'CLASS'
In the 'Feature Name' list box, select 'Continuous Redial - IAO'
In the 'Label Used on Outputs' box, select 'Line'
In the 'Feature Inputs' list box, select 'Busy Hour IAO Continuous Redial Term. Call Att's per IAO CR Line'
In the 'Enter New Input' box, enter '0.0325' and click OK
In the 'Feature Inputs' list box, select 'Percent Continuous Redial Calls that are Delay Processed'
In the 'Enter New Input' box, enter '100' and click OK
In the 'Feature Inputs' list box, select 'Percent of Working Lines with Cont. Redial or Last Call Return'
In the 'Enter New Input' box, enter '5' and click OK
Click the 'Add or Modify Feature in Project' button

In the 'Feature Group' list box, select 'CLASS'
In the 'Feature Name' list box, select 'Continuous Redial - IEO'
In the 'Label Used on Outputs' box, select 'Line'
In the 'Feature Inputs' list box, select 'Busy Hour IEO Continuous Redial Term. Call Att's per IEO CR Line'
In the 'Enter New Input' box, enter '0.0759' and click OK
In the 'Feature Inputs' list box, select 'Percent Continuous Redial Calls that are Delay Processed'
In the 'Enter New Input' box, enter '100' and click OK
In the 'Feature Inputs' list box, select 'Percent of Working Lines with Cont. Redial or Last Call Return'
In the 'Enter New Input' box, enter '5' and click OK
Click the 'Add or Modify Feature in Project' button

In the 'Feature Group' list box, select 'CLASS'
In the 'Feature Name' list box, select 'Last Call Return - IAO'
In the 'Label Used on Outputs' box, select 'Line'
In the 'Feature Inputs' list box, select 'Busy Hour IAO Last Call Return Term. Call Att's per IAO LCR Line'
In the 'Enter New Input' box, enter '0.0009' and click OK
In the 'Feature Inputs' list box, select 'Percent Last Call Return Calls that are Delay Processed'
In the 'Enter New Input' box, enter '17' and click OK
In the 'Feature Inputs' list box, select 'Percent of Working Lines with Cont. Redial or Last Call Return'
In the 'Enter New Input' box, enter '5' and click OK
Click the 'Add or Modify Feature in Project' button

In the 'Feature Group' list box, select 'CLASS'
In the 'Feature Name' list box, select 'Last Call Return - IEO'
In the 'Label Used on Outputs' box, select 'Line'
In the 'Feature Inputs' list box, select 'Busy Hour IEO Last Call Return Term. Call Att's per IEO LCR Line'
In the 'Enter New Input' box, enter '0.0022' and click OK
In the 'Feature Inputs' list box, select 'Percent Last Call Return Calls that are Delay Processed'
In the 'Enter New Input' box, enter '17' and click OK
In the 'Feature Inputs' list box, select 'Percent of Working Lines with Cont. Redial or Last Call Return'
In the 'Enter New Input' box, enter '5' and click OK
Click the 'Add or Modify Feature in Project' button

In the 'Feature Group' list box, select 'CLASS'
In the 'Feature Name' list box, select 'Priority Calling'
In the 'Label Used on Outputs' box, select 'per Line'
In the 'Feature Inputs' list box, select 'Busy Hour Screen List Editing Accesses'

In the 'Enter New Input' box, enter '0.05' and click OK
In the 'Feature Inputs' list box, select 'Busy Hour Terminating Call Attempts per Line with Priority Call'
In the 'Enter New Input' box, enter '3' and click OK
In the 'Feature Inputs' list box, select 'Busy Hour Priority Call Terminations per Priority Call Line'
In the 'Enter New Input' box, enter '0.1' and click OK
In the 'Feature Inputs' list box, select 'Percent of SW1 Lines with Auto Customer Station Rearrangement'
In the 'Enter New Input' box, enter '0.0001' and click OK
In the 'Feature Inputs' list box, select 'Percent of Lines with Priority Call'
In the 'Enter New Input' box, enter '1.5' and click OK
In the 'Feature Inputs' list box, select 'Percent of SW1 Lines with Remote Activation'
In the 'Enter New Input' box, enter '3' and click OK
In the 'Feature Inputs' list box, select 'Percent of Lines with Selective Call Acceptance'
In the 'Enter New Input' box, enter '0' and click OK
In the 'Feature Inputs' list box, select 'Percent of Lines with Selective Call Forwarding'
In the 'Enter New Input' box, enter '1' and click OK
In the 'Feature Inputs' list box, select 'Pct. of All Lines with either Selective Call Rejection or UCR'
In the 'Enter New Input' box, enter '3.35' and click OK
In the 'Feature Inputs' list box, select 'Screen List Editing Holding Time (CCS per Call)'
In the 'Enter New Input' box, enter '3' and click OK
In the 'Feature Inputs' list box, select 'Percent of Screen List Editing Additions that are Interoffice'
In the 'Enter New Input' box, enter '70' and click OK
Click the 'Add or Modify Feature in Project' button

In the 'Feature Group' list box, select 'CLASS'
In the 'Feature Name' list box, select 'Selective Call Forwarding'
In the 'Label Used on Outputs' box, select 'Line'
In the 'Feature Inputs' list box, select 'Busy Hour Screen List Editing Accesses'
In the 'Enter New Input' box, enter '0.05' and click OK
In the 'Feature Inputs' list box, select 'Busy Hour Terminating Call Attempts per Line with SCF'
In the 'Enter New Input' box, enter '3' and click OK
In the 'Feature Inputs' list box, select 'Busy Hour SCF Calls Forwarded/Line with SCF'
In the 'Enter New Input' box, enter '0.1' and click OK
In the 'Feature Inputs' list box, select 'Percent of SW1 Lines with Auto Customer Station Rearrangement'
In the 'Enter New Input' box, enter '0' and click OK
In the 'Feature Inputs' list box, select 'Percent of Lines with Priority Call'
In the 'Enter New Input' box, enter '1.5' and click OK
In the 'Feature Inputs' list box, select 'Percent of SW1 Lines with Remote Activation'
In the 'Enter New Input' box, enter '3' and click OK
In the 'Feature Inputs' list box, select 'Percent of Lines with Selective Call Acceptance'
In the 'Enter New Input' box, enter '0.0001' and click OK
In the 'Feature Inputs' list box, select 'Percent of Lines with Selective Call Forwarding'
In the 'Enter New Input' box, enter '1' and click OK
In the 'Feature Inputs' list box, select 'Percent of Lines with Selective Call Rejection'
In the 'Enter New Input' box, enter '3.35' and click OK
In the 'Feature Inputs' list box, select 'Screen List Editing Holding Time (CCS per Call)'
In the 'Enter New Input' box, enter '3' and click OK
In the 'Feature Inputs' list box, select 'Percent of Screen List Editing Additions that are Interoffice'
In the 'Enter New Input' box, enter '70' and click OK
Click the 'Add or Modify Feature in Project' button

In the 'Feature Group' list box, select 'CLASS'
In the 'Feature Name' list box, select 'Selective Call Rejection'
In the 'Label Used on Outputs' box, select 'Line'
In the 'Feature Inputs' list box, select 'Busy Hour Screen List Editing Accesses'
In the 'Enter New Input' box, enter '0.05' and click OK
In the 'Feature Inputs' list box, select 'Busy Hour Terminating Call Attempts per Line with SCR'
In the 'Enter New Input' box, enter '3' and click OK
In the 'Feature Inputs' list box, select 'Busy Hour Call Rejections per Line with SCR'
In the 'Enter New Input' box, enter '0.1' and click OK
In the 'Feature Inputs' list box, select 'Percent of SW1 Lines with Auto Customer Station Rearrangement'
In the 'Enter New Input' box, enter '0' and click OK
In the 'Feature Inputs' list box, select 'Percent of Lines with Priority Call'
In the 'Enter New Input' box, enter '1.5' and click OK
In the 'Feature Inputs' list box, select 'Percent of SW1 Lines with Remote Activation'
In the 'Enter New Input' box, enter '3' and click OK
In the 'Feature Inputs' list box, select 'Percent of Lines with Selective Call Acceptance'
In the 'Enter New Input' box, enter '0' and click OK
In the 'Feature Inputs' list box, select 'Percent of Lines with Selective Call Forwarding'
In the 'Enter New Input' box, enter '1' and click OK
In the 'Feature Inputs' list box, select 'Pct. of All Lines with either Selective Call Rejection or UCR'
In the 'Enter New Input' box, enter '3.35' and click OK
In the 'Feature Inputs' list box, select 'Screen List Editing Holding Time (CCS per Call)'
In the 'Enter New Input' box, enter '3' and click OK
In the 'Feature Inputs' list box, select 'Percent of Screen List Editing Additions that are Interoffice'
In the 'Enter New Input' box, enter '70' and click OK
Click the 'Add or Modify Feature in Project' button

In the 'Feature Group' list box, select 'CLASS'
In the 'Feature Name' list box, select 'Unidentified Caller Rejection - Acceptance & Rejection'
In the 'Label Used on Outputs' box, select 'Line'
In the 'Feature Inputs' list box, select 'Busy Hour Activations per UCR Line'
In the 'Enter New Input' box, enter '0.01' and click OK
In the 'Feature Inputs' list box, select 'Busy Hour Terminating Call Attempts per Line with UCR'
In the 'Enter New Input' box, enter '3' and click OK
In the 'Feature Inputs' list box, select 'Busy Hour Deactivations per UCR Line'
In the 'Enter New Input' box, enter '0.001' and click OK
In the 'Feature Inputs' list box, select 'Busy Hour Call Rejections per Line with UCR'
In the 'Enter New Input' box, enter '0.1' and click OK
In the 'Feature Inputs' list box, select 'Average Number of UCR in Office'
In the 'Enter New Input' box, enter '5204' and click OK
Click the 'Add or Modify Feature in Project' button

In the 'Feature Group' list box, select 'POTS'
In the 'Feature Name' list box, select 'Call Waiting'
In the 'Label Used on Outputs' box, select 'Line'
In the 'Feature Inputs' list box, select 'Busy Hour Call Waiting Call Attempts per CW Line'
In the 'Enter New Input' box, enter '0.15' and click OK
Click the 'Add or Modify Feature in Project' button

In the 'Feature Group' list box, select 'POTS'
In the 'Feature Name' list box, select 'Cancel Call Waiting'
In the 'Label Used on Outputs' box, select 'Line'
In the 'Feature Inputs' list box, select 'Busy Hour Cancel Call Waiting Call Attempts per CCW Line'
In the 'Enter New Input' box, enter '0.15' and click OK
Click the 'Add or Modify Feature in Project' button

In the 'Feature Group' list box, select 'POTS'
In the 'Feature Name' list box, select 'Call Forwarding-Busy Line - IAO Customer Changeable'
In the 'Label Used on Outputs' box, select 'Line'
In the 'Feature Inputs' list box, select 'Busy Hour Activations per IAO CF-BL Line'
In the 'Enter New Input' box, enter '0.011' and click OK
In the 'Feature Inputs' list box, select 'Busy Hour IAO CF-BL Call Attempts per IAO CF-BL Line'
In the 'Enter New Input' box, enter '0.0213' and click OK
In the 'Feature Inputs' list box, select 'Busy Hour Deactivations per IAO CF-BL Line'
In the 'Enter New Input' box, enter '0.0077' and click OK
Click the 'Add or Modify Feature in Project' button

In the 'Feature Group' list box, select 'POTS'
In the 'Feature Name' list box, select 'Call Forwarding-Busy Line - IEO Customer Changeable'
In the 'Label Used on Outputs' box, select 'Line'
In the 'Feature Inputs' list box, select 'Busy Hour Activations per IEO CF-BL Line'
In the 'Enter New Input' box, enter '0.011' and click OK
In the 'Feature Inputs' list box, select 'Busy Hour IEO CF-BL Call Attempts per IEO CF-BL Line'
In the 'Enter New Input' box, enter '0.0213' and click OK
In the 'Feature Inputs' list box, select 'Busy Hour Deactivations per IEO CF-BL Line'
In the 'Enter New Input' box, enter '0.0077' and click OK
Click the 'Add or Modify Feature in Project' button

In the 'Feature Group' list box, select 'POTS'
In the 'Feature Name' list box, select 'Call Forwarding-Busy Line - IEO Customer NonChangeable'
In the 'Label Used on Outputs' box, select 'Line'
In the 'Feature Inputs' list box, select 'Busy Hour IEO CF-BL Call Attempts per IEO CF-BL Line'
In the 'Enter New Input' box, enter '0.15' and click OK
Click the 'Add or Modify Feature in Project' button

In the 'Feature Group' list box, select 'POTS'
In the 'Feature Name' list box, select 'Call Forwarding-Don't Answer: IAO Customer Changeable'
In the 'Label Used on Outputs' box, select 'Line'
In the 'Feature Inputs' list box, select 'Busy Hour Activations per IAO CF-DA Line'
In the 'Enter New Input' box, enter '0.0076' and click OK
In the 'Feature Inputs' list box, select 'Busy Hour IAO CF-DA Call Attempts per IAO CF-DA Line'
In the 'Enter New Input' box, enter '0.0831' and click OK
In the 'Feature Inputs' list box, select 'Busy Hour Deactivations per IAO CF-DA Line'
In the 'Enter New Input' box, enter '0.0077' and click OK
Click the 'Add or Modify Feature in Project' button

In the 'Feature Group' list box, select 'POTS'

In the 'Feature Name' list box, select 'Call Forwarding-Don't Answer: IEO Customer Changeable'
In the 'Label Used on Outputs' box, select 'Line'
In the 'Feature Inputs' list box, select 'Busy Hour Activations per IEO CF-DA Line'
In the 'Enter New Input' box, enter '0.0076' and click OK
In the 'Feature Inputs' list box, select 'Busy Hour IEO CF-DA Call Attempts per IEO CF-DA Line'
In the 'Enter New Input' box, enter '0.0831' and click OK
In the 'Feature Inputs' list box, select 'Busy Hour Deactivations per IEO CF-DA Line'
In the 'Enter New Input' box, enter '0.0043' and click OK
Click the 'Add or Modify Feature in Project' button

In the 'Feature Group' list box, select 'POTS'
In the 'Feature Name' list box, select 'Call Forwarding-Don't Answer: IEO Customer NonChangeable'
In the 'Label Used on Outputs' box, select 'Line'
In the 'Feature Inputs' list box, select 'Busy Hour IEO CF-DA Call Attempts per IEO CF-DA Line'
In the 'Enter New Input' box, enter '0.2821' and click OK
Click the 'Add or Modify Feature in Project' button

In the 'Feature Group' list box, select 'POTS'
In the 'Feature Name' list box, select 'Call Forwarding Variable - IAO (Use with Remote Activation)'
In the 'Label Used on Outputs' box, select 'Line'
In the 'Feature Inputs' list box, select 'Busy Hour IAO CFV Call Attempts per IAO CFV Line'
In the 'Enter New Input' box, enter '0.0911' and click OK
Click the 'Add or Modify Feature in Project' button

In the 'Feature Group' list box, select 'POTS'
In the 'Feature Name' list box, select 'Call Forwarding Variable - IAO Customer Changeable'
In the 'Label Used on Outputs' box, select 'Line'
In the 'Feature Inputs' list box, select 'Busy Hour Activations per IAO CFV Line'
In the 'Enter New Input' box, enter '0.0112' and click OK
In the 'Feature Inputs' list box, select 'Busy Hour IAO CFV Call Attempts per IAO CFV Line'
In the 'Enter New Input' box, enter '0.0911' and click OK
In the 'Feature Inputs' list box, select 'Busy Hour Deactivations per IAO CFV Line'
In the 'Enter New Input' box, enter '0.0043' and click OK
Click the 'Add or Modify Feature in Project' button

In the 'Feature Group' list box, select 'POTS'
In the 'Feature Name' list box, select 'Call Forwarding Variable - IEO (Use with Remote Activation)'
In the 'Label Used on Outputs' box, select 'Line'
In the 'Feature Inputs' list box, select 'Busy Hour IEO CFV Call Attempts per IEO CFV Line'
In the 'Enter New Input' box, enter '0.0911' and click OK
Click the 'Add or Modify Feature in Project' button

In the 'Feature Group' list box, select 'POTS'
In the 'Feature Name' list box, select 'Call Forwarding Variable - IEO Customer Changeable'
In the 'Label Used on Outputs' box, select 'Line'
In the 'Feature Inputs' list box, select 'Busy Hour Activations per IEO CFV Line'
In the 'Enter New Input' box, enter '0.0112' and click OK
In the 'Feature Inputs' list box, select 'Busy Hour IEO CFV Call Attempts per IEO CFV Line'
In the 'Enter New Input' box, enter '0.0911' and click OK

In the 'Feature Inputs' list box, select 'Busy Hour Deactivations per IEO CFV Line'
In the 'Enter New Input' box, enter '0.0043' and click OK
Click the 'Add or Modify Feature in Project' button

In the 'Feature Group' list box, select 'POTS'
In the 'Feature Name' list box, select 'Distinctive Ringing'
In the 'Label Used on Outputs' box, select 'Line'
In the 'Feature Inputs' list box, select 'Busy Hour Term. Call Attempts per Line with Distinctive Ringing'
In the 'Enter New Input' box, enter '2' and click OK
In the 'Feature Inputs' list box, select 'Percent of Term. Call Attempts that get Distinctive Ringing'
In the 'Enter New Input' box, enter '50' and click OK
In the 'Feature Inputs' list box, select 'Number of Secondary Phone Numbers'
In the 'Enter New Input' box, enter '1' and click OK
Click the 'Add or Modify Feature in Project' button

In the 'Feature Group' list box, select 'POTS'
In the 'Feature Name' list box, select 'Speed Call Long - Customer Changeable'
In the 'Label Used on Outputs' box, select 'Line'
In the 'Feature Inputs' list box, select 'Busy Hour Activations per SCL Line'
In the 'Enter New Input' box, enter '0.0001' and click OK
In the 'Feature Inputs' list box, select 'Busy Hour Speed Call Attempts per SCL Line'
In the 'Enter New Input' box, enter '0.0703' and click OK
Click the 'Add or Modify Feature in Project' button

In the 'Feature Group' list box, select 'POTS'
In the 'Feature Name' list box, select 'Three Way Calling'
In the 'Label Used on Outputs' box, select 'Line'
In the 'Feature Inputs' list box, select 'Busy Hour 3WC Call Attempts per 3WC Line'
In the 'Enter New Input' box, enter '0.0481' and click OK
In the 'Feature Inputs' list box, select '3WC or Office Holding Time (CCS per Call)'
In the 'Enter New Input' box, enter '0.36' and click OK
Click the 'Add or Modify Feature in Project' button

In the 'Feature Group' list box, select 'CLASS'
In the 'Feature Name' list box, select 'Calling Name and Number (SS7 included)'
In the 'Label Used on Outputs' box, select 'per Line'
In the 'Feature Inputs' list box, select 'Busy Hour Term. Call Attempts per Line'
In the 'Enter New Input' box, enter '0.92' and click OK
Click the 'Add or Modify Feature in Project' button

In the 'Feature Group' list box, select 'CENTRON'
In the 'Feature Name' list box, select '10XXX Split Blocking'
In the 'Label Used on Outputs' box, select 'per Line'
In the 'Feature Inputs' list box, select 'Busy Hour 10XXX Split Blocking Attempts per 10XXX SB'
In the 'Enter New Input' box, enter '0.05' and click OK
Click the 'Add or Modify Feature in Project' button

In the 'Feature Group' list box, select 'POTS'
In the 'Feature Name' list box, select 'Block Pay per Use Features'

In the 'Label Used on Outputs' box, select 'per Line'
In the 'Feature Inputs' list box, select 'Percent of All Lines with Block Pay per Use Feature'
In the 'Enter New Input' box, enter '0.01' and click OK
Click the 'Add or Modify Feature in Project' button

In the 'Feature Group' list box, select 'CENTRON'
In the 'Feature Name' list box, select 'MADN Bridging - 3WC'
In the 'Label Used on Outputs' box, select 'per Line'
In the 'Feature Inputs' list box, select 'Busy Hour MADN Bridging Call Attempts per MADN Line'
In the 'Enter New Input' box, enter '0.001443' and click OK
In the 'Feature Inputs' list box, select 'MADN Bridging or Office Holding Time (CCS per Call)'
In the 'Enter New Input' box, enter '0.36' and click OK
Click the 'Add or Modify Feature in Project' button

In the 'Feature Group' list box, select 'ISDN BASIC'
In the 'Feature Name' list box, select 'Auto Drop'
In the 'Label Used on Outputs' box, select 'per Line'
In the 'Feature Inputs' list box, select 'Busy Hour Auto Drop Attempts per Auto Drop Line'
In the 'Enter New Input' box, enter '0.00481' and click OK
Click the 'Add or Modify Feature in Project' button

In the 'Feature Group' list box, select 'ISDN MADN'
In the 'Feature Name' list box, select 'MADN - Automatic Exclusion'
In the 'Label Used on Outputs' box, select 'per Line'
In the 'Feature Inputs' list box, select 'Busy Hour Automatic Exclusion Call Att's per Auto Exclusion Line'
In the 'Enter New Input' box, enter '0.000144' and click OK
Click the 'Add or Modify Feature in Project' button

In the 'Feature Group' list box, select 'ISDN MADN'
In the 'Feature Name' list box, select 'MADN - Manual Exclusion'
In the 'Label Used on Outputs' box, select 'per Line'
In the 'Feature Inputs' list box, select 'Busy Hour Manual Exclusion Call Att's per Manual Exclusion Line'
In the 'Enter New Input' box, enter '0.000144' and click OK
Click the 'Add or Modify Feature in Project' button

In the 'Feature Group' list box, select 'ISDN FEATURES'
In the 'Feature Name' list box, select 'Call Forwarding - Incoming Only'
In the 'Label Used on Outputs' box, select 'per Line'
In the 'Feature Inputs' list box, select 'Busy Hour Call Attempts'
In the 'Enter New Input' box, enter '0.05' and click OK
Click the 'Add or Modify Feature in Project' button

In the 'Feature Group' list box, select 'ISDN FEATURES'
In the 'Feature Name' list box, select 'Call Forwarding Intra Group Only (Use with Remote Activation Feature)'
In the 'Label Used on Outputs' box, select 'per Line'
In the 'Feature Inputs' list box, select 'Busy Hour Call Attempts'
In the 'Enter New Input' box, enter '0.011' and click OK
Click the 'Add or Modify Feature in Project' button

In the 'Feature Group' list box, select 'ISDN FEATURES'
In the 'Feature Name' list box, select 'Call Forwarding Variable - IAO (Use with Remote Activation)'
In the 'Label Used on Outputs' box, select 'per Line'
In the 'Feature Inputs' list box, select 'Busy Hour IAO CFV Call Attempts per IAO CFV Line'
In the 'Enter New Input' box, enter '0.0911' and click OK
Click the 'Add or Modify Feature in Project' button

In the 'Feature Group' list box, select 'ISDN FEATURES'
In the 'Feature Name' list box, select 'Call Forwarding-Don't Answer: Incoming Only'
In the 'Label Used on Outputs' box, select 'per Line'
In the 'Feature Inputs' list box, select 'Busy Hour IAO CF-DA Call Attempts per IAO CF-DA Line'
In the 'Enter New Input' box, enter '0.09' and click OK
Click the 'Add or Modify Feature in Project' button

In the 'Feature Group' list box, select 'POTS'
In the 'Feature Name' list box, select 'Distinctive Ringing'
In the 'Label Used on Outputs' box, select 'per Line'
In the 'Feature Inputs' list box, select 'Busy Hour Term. Call Attempts per Line with Distinctive Ringing'
In the 'Enter New Input' box, enter '1.3' and click OK
In the 'Feature Inputs' list box, select 'Number of Secondary Phone Numbers'
In the 'Enter New Input' box, enter '1' and click OK
In the 'Feature Inputs' list box, select 'Percent of Term. Call Attempts that get Distinctive Ringing'
In the 'Enter New Input' box, enter '50' and click OK
Click the 'Add or Modify Feature in Project' button

In the 'Feature Group' list box, select 'CENTRON'
In the 'Feature Name' list box, select 'Directed Call Pickup with Barge-in'
In the 'Label Used on Outputs' box, select 'per Line'
In the 'Feature Inputs' list box, select 'Busy Hour DCPU-BI Call Attempts per DCPU-BI Line'
In the 'Enter New Input' box, enter '0.075' and click OK
In the 'Feature Inputs' list box, select 'DCPU-BI or Office Holding Time (CCS per Call)'
In the 'Enter New Input' box, enter '1.6' and click OK
Click the 'Add or Modify Feature in Project' button

In the 'Feature Group' list box, select 'CENTRON'
In the 'Feature Name' list box, select 'Directed Call Pickup without Barge-in'
In the 'Label Used on Outputs' box, select 'per Line'
In the 'Feature Inputs' list box, select 'Busy Hour Directed Call Pickup Call Attempts per DCPU Line'
In the 'Enter New Input' box, enter '0.15' and click OK
Click the 'Add or Modify Feature in Project' button

In the 'Feature Group' list box, select 'ISDN BASIC'
In the 'Feature Name' list box, select 'Feature Display'
In the 'Label Used on Outputs' box, select 'per Line'
In the 'Feature Inputs' list box, select 'Busy Hour Feature Display Attempts per Feature Display Line'
In the 'Enter New Input' box, enter '0.0025' and click OK
Click the 'Add or Modify Feature in Project' button

In the 'Feature Group' list box, select 'CENTRON'

In the 'Feature Name' list box, select 'Group Intercom - All Calls'
In the 'Label Used on Outputs' box, select 'per Line'
In the 'Feature Inputs' list box, select 'Busy Hour GIC-ALL Call Attempts per Line'
In the 'Enter New Input' box, enter '0.5' and click OK
Click the 'Add or Modify Feature in Project' button

In the 'Feature Group' list box, select 'CENTRON'
In the 'Feature Name' list box, select 'Queuing for MUPH'
In the 'Label Used on Outputs' box, select 'per Line'
In the 'Feature Inputs' list box, select 'Busy Hour MUPH Queuing Attempts per MUPH Line/System'
In the 'Enter New Input' box, enter '0.610904' and click OK
Click the 'Add or Modify Feature in Project' button

In the 'Feature Group' list box, select 'CENTRON'
In the 'Feature Name' list box, select 'Multiline Hunt'
In the 'Label Used on Outputs' box, select 'per Line'
In the 'Feature Inputs' list box, select 'Busy Hour Multi-Line Hunt Term. Call Attempts per MLH Line'
In the 'Enter New Input' box, enter '12.21809' and click OK
Click the 'Add or Modify Feature in Project' button

In the 'Feature Group' list box, select 'CENTRON'
In the 'Feature Name' list box, select 'Delayed Announcements for MUPH Queue'
In the 'Label Used on Outputs' box, select 'per Line'
In the 'Feature Inputs' list box, select 'Avg. number of Lines within Group (for $/Line not $/System)'
In the 'Enter New Input' box, enter '10' and click OK
In the 'Feature Inputs' list box, select 'BH Delayed Announcement Call Attempts per MUPH Queue System/Line'
In the 'Enter New Input' box, enter '0.610904' and click OK
Click the 'Add or Modify Feature in Project' button

In the 'Feature Group' list box, select 'CENTRON'
In the 'Feature Name' list box, select 'Music in Queue - Multi-Position Hunt Group'
In the 'Label Used on Outputs' box, select 'per Line'
In the 'Feature Inputs' list box, select 'Avg. number of Lines within Group (for $/Line not $/System)'
In the 'Enter New Input' box, enter '10' and click OK
In the 'Feature Inputs' list box, select 'Busy Hour Music In Queue - MUPH Attempts per MUPH Line'
In the 'Enter New Input' box, enter '0.610904' and click OK
Click the 'Add or Modify Feature in Project' button

In the 'Feature Group' list box, select 'POTS'
In the 'Feature Name' list box, select 'Incoming Calls Barred'
In the 'Label Used on Outputs' box, select 'per Line'
In the 'Feature Inputs' list box, select 'Busy Hour Incoming Call Attempts per Restricted Line'
In the 'Enter New Input' box, enter '0.1' and click OK
Click the 'Add or Modify Feature in Project' button

In the 'Feature Group' list box, select 'POTS'
In the 'Feature Name' list box, select 'International Direct Dial Blocking'
In the 'Label Used on Outputs' box, select 'per Line'
In the 'Feature Inputs' list box, select 'Busy Hour International Dial Attempts per International Direct Dial Blocking L

In the 'Enter New Input' box, enter '0.05' and click OK
Click the 'Add or Modify Feature in Project' button

In the 'Feature Group' list box, select 'FCC'
In the 'Feature Name' list box, select 'Answer Supervision - Line'
In the 'Label Used on Outputs' box, select 'per Line'
In the 'Feature Inputs' list box, select 'Busy Hour Answer Supervision Call Attempts per Line'
In the 'Enter New Input' box, enter '2' and click OK
Click the 'Add or Modify Feature in Project' button

In the 'Feature Group' list box, select 'POTS'
In the 'Feature Name' list box, select 'Outgoing Calls Barred'
In the 'Label Used on Outputs' box, select 'per Line'
In the 'Feature Inputs' list box, select 'Busy Hour Outgoing Call Attempts per Restricted Line'
In the 'Enter New Input' box, enter '0.0075' and click OK
Click the 'Add or Modify Feature in Project' button

In the 'Feature Group' list box, select 'CENTRON'
In the 'Feature Name' list box, select 'Outgoing Trunk Queuing Without Recorded Announcement'
In the 'Label Used on Outputs' box, select 'per Line'
In the 'Feature Inputs' list box, select 'Busy Hour Outgoing Trunk Queuing Attempts per Trunk'
In the 'Enter New Input' box, enter '0.610904' and click OK
Click the 'Add or Modify Feature in Project' button

In the 'Feature Group' list box, select 'POTS'
In the 'Feature Name' list box, select 'Toll Restriction'
In the 'Label Used on Outputs' box, select 'per Line'
In the 'Feature Inputs' list box, select 'Busy Hour Toll Restricted Attempts per Toll Restriction Line'
In the 'Enter New Input' box, enter '0.0715' and click OK
Click the 'Add or Modify Feature in Project' button

In the 'Feature Group' list box, select 'ISDN FEATURES'
In the 'Feature Name' list box, select 'Key Short Hunt'
In the 'Label Used on Outputs' box, select 'per Line'
In the 'Feature Inputs' list box, select 'Busy Hour Key Short Hunt Call Attempts per Key Short Hunt Group'
In the 'Enter New Input' box, enter '5' and click OK
Click the 'Add or Modify Feature in Project' button

In the 'Feature Group' list box, select 'ISDN BASIC'
In the 'Feature Name' list box, select 'Time and Date'
In the 'Label Used on Outputs' box, select 'per Line'
In the 'Feature Inputs' list box, select 'Busy Hour Time & Date Attempts per Time & Date Line'
In the 'Enter New Input' box, enter '5' and click OK
Click the 'Add or Modify Feature in Project' button

Click on 'Excel Output' in the menu bar

When the calculations are complete, a 'Save As' dialog box appears.
Save the file if so desired.

South Dakota Public Utilities Commission
Docket No. TC 01_____
Qwest Corporation

Attachment 8

Study No. 5476
Cap Lease Per Port

Qwest

QWEST

SOUTH DAKOTA

CAPITAL LEASE RTU - PER LINE PORT

TELRIC

Study ID: 5476

RECURRING COST STUDY

JULY 2001

MSEA

Market Services And Economic Analysis Organization

Table of Contents

Section	Topic	Page
1.	**Study Output**	
	Executive Summary	1
	Study Summary	13
	WINPC3 Output	14
	Total Product Costs	15
	Investment Cost Calculations	16
2.	**Cost Calculations**	
	Inputs	18
	Capital Lease Expense	19
	WINPC3 Investments	20
	WINPC3 Parameters	21
	WINPC3 ACF Inputs	22
	WINPC3 ACF Outputs	25
3.	**Source Data**	
	Variables	29
	Model Descriptions	30
	Model Definitions	31

Section 1

Study Output

A. PURPOSE, SCOPE, AND APPLICATION

The purpose of this study is to estimate the long run incremental costs Qwest will incur to provide features for use on a Line Port, as part of Local Interconnection Service for a Competitive Local Exchange Carrier (CLEC).

This study develops the unitized total element long run incremental cost (TELRIC).

Costs developed in this study are monthly recurring costs per port for the features available to an unbundled Analog Line Side Port.

B. DESCRIPTION OF SERVICE

Features are available to unbundled Analog Line Side Ports and the costs, therefore, are included in the port cost.

The following features are included in this study:

10XXX Direct Dialed Blocking
This option blocks directly dialed calls which use a carrier's CIC code in order to bypass the designated PIC'd carrier. This feature does not restrict all directly dialed calls.

Account Codes - per system
The Account Code feature allows customer to input numbers (# of digits depends upon switch type) designed for departmental or personal cost accounting and client billing.

Attendant Access Line - per station line
Allows a Centrex Attendant Line to receive dial "zero" calls.

Audible Message Waiting
When a user goes off hook a stutter dial tone is provided to indicate a message is waiting

Authorization Codes - per system
Allows a user having an assigned code to change restrictions originating on a subscriber line.

Automatic Callback Calling/Ring Again -
Provides an arrangement that permits a line user, when attempting an intercom (i.e., within the customer group) call to a busy line, to be automatically connected to that line when both the called and calling lines are subsequently idle.

Automatic Line
Allows equipped station to automatically place a call to a preassigned number by going off-hook.

Automatic Route Selection - Common Equip. per system
ARS is an optional feature, available where facilities permit that allows station users, by dialing a preselected code, to automatically select the preferred route subscribed for by a customer, for network calls. Alternate routing to other facilities subscribed for by the customer, is also provided. This arrangement is available for use with FX, WATS and MTS Network.

Blocking of pay per call services
Line restricted from making pay per call calls.

B. DESCRIPTION OF SERVICE

Bridging

Allows the Digital Electronic Telephone Set (DETS) user to bridge onto a currently active call by pressing the shared call appearance button.

Call Drop

The Drop feature allows the user to drop the last party that was added to the conference call. Also, this feature allows a user to disconnect a 2-party call.

Call Exclusion - Automatic

Automatic bridged call exclusion, automatic re-enable - For this privacy option, the initial privacy status for the CA is private. This mode allows any number of members to bridge onto the call after privacy has been explicitly released. Privacy can be restored by user control only. Hence, privacy need only be released once when a conference bridge of arbitrary size is being established.

Call Exclusion - Manual

This mode specifies the initial privacy status for the CA to be non-private. Bridging may occur at any time unless an active EKTS member explicitly invokes privacy on the call. The privacy can also be released by the user after it is invoked.

Call Forwarding Don't Answer - All Calls

Provides for forwarding of all calls to a preselected telephone number, when the called station does not answer after a predetermined number of ringing cycles.

Call Forwarding Don't Answer - Incoming Only

Provides for forwarding of incoming only calls to a preselected telephone number, when the called station does not answer after a predetermined number of ringing cycles.

Call Forwarding Incoming Only

ISDN Call Forwarding Incoming Only - Allows an ISDN port to forward calls to a user defined telephone number. Only calls originating from outside the business group will be transferred. The destination is changeable by the user. This feature is applicable to both circuit switched voice and circuit switched data call.

Call Forwarding Intra Group Only

Allows an ISDN port to forward calls to a user defined telephone number within the Business Group only. The destination is changeable by the user. This feature is applicable to both circuit switched voice and circuit switched data call.

Call Forwarding-Variable use with Remote Access

Remote Call Forwarding (RCF) provides the customer a local telephone number which establishes a presence in a community without having to have an office in that community. This service provides a telephone number to forward incoming calls to another telephone number. The feature is programmed in the RSF central office so calls going into the RCF telephone number are automatically forwarded to the destination telephone number. No physical location is needed.

Call Forwarding-Busy Line (Expanded)

Allows a customer to have an incoming call forwarded to another predetermined number in a different central office switch if the called number is busy.

B. DESCRIPTION OF SERVICE

Call Forwarding-Busy Line (External)
Allows a customer to have incoming calls forwarded to another predetermined number outside the customer's system within the same central office switch when the called number is busy.

Call Forwarding-Busy Line/Don't Answer (External)
Allows a customer to have incoming calls forwarded to another predetermined number outside the customer's system within the same central office switch when the called number is busy or if the customer does not answer after a preset number of rings.

Call Forwarding Busy Line - All Calls
Provides for forwarding of all calls to a preselected telephone number, when the called station is busy.

Call Forwarding Busy Line - Incoming Only
Provides for forwarding of incoming only calls to a preselected telephone number, when the called station is busy.

Call Forwarding Variable
Allows a user to automatically forward "all" calls to any other number.

Call Forwarding-Busy Line (Overflow)
Allows a customer to have incoming calls forwarded to another predetermined number within the customer's central office if the called number is busy.

Call Forwarding-Busy Line (Programmable)
Allows a customer to have incoming calls forwarded to another number when the called number is busy. The customer can activate and deactivate the forwarding feature by dialing a code as well as establish or change the number to which calls are forwarded.

Call Forwarding-Busy Line/Don't Answer (Expanded)
Allows a customer to have an incoming call forwarded to another predetermined number in a different central office switch if the called number is busy or if the customer does not answer after a preset number of rings.

Call Forwarding-Busy Line/Don't Answer (Overflow)
Allows a customer to have incoming calls forwarded to another predetermined number within the customer's central office if the called number is busy or if the customer does not answer after a preset number of rings.

Call Forwarding-Don't Answer
Allows a customer to have an incoming call forwarded to another predetermined number within the same central office switch if the customer does not answer after a preset number of rings.

Call Forwarding-Don't Answer (Expanded)
Allows a customer to have an incoming call forwarded to another predetermined number outside the serving central office switch if the customer does not answer after a preset number of rings.

Call Forwarding-Don't Answer (Programmable)
Allows a customer to have incoming calls forwarded to another number if the customer does not answer after a preset number of ringing cycles. The customer can activate and deactivate the forwarding by dialing a code as well as establish or change the number to which calls are forwarded.

B. DESCRIPTION OF SERVICE

Call Forwarding-Variable-No Call Completion Option
An option of Call Forwarding-Variable that allows a customer subscribing to that feature to activate it without completing a call to the forward-to number.

Call Hold
Allows a customer to hold any call in progress, by dialing a code.

Call Hold/3-Way/Call Transfer
User can connect a third line to an established connection. A user can depress the switchhook, or ISDN set feature button, and consult in private with a third party and return to the original call by using only one line. A user of a line can transfer any established call to another line within or outside the Centrex System.

Call Park (Basic - Store & Retrieve)
Allows a user to hold or "Park" a call by dialing a code that can be retrieved from any station by dialing another code.

Call Pickup
Enables a station user to answer calls directed to other specified stations by dialing a special code.

Call Transfer
Enables a customer to transfer an incoming call to a third party or add a third party to an existing call, forming a three party connection, and then to leave the connection without disconnecting the call.

Call Waiting Dial Originating
Provides the ability for the originating station to invoke call waiting tone on selected calls by dialing the dial call waiting access code followed by the extension number of the station to be call waited.

Call Waiting Indication - per timing state
Lamps are used to indicate that calls have been queued longer than a customer specified threshold. One to three lamps may be provided indicating different delay lengths.

Call Waiting Originating
Allows a calling station to direct a call waiting tone toward a busy called station within the same system.

Call Waiting Terminating - All Calls
Allows for a Centrex PRIME station user who is engaged in a telephone conversation to be alerted via an audible tone that a call is waiting on an all calls basis.

Call Waiting Terminating - Incoming Only
Allows for a Centrex PRIME station user who is engaged in a telephone conversation to be alerted via an audible tone that a call is waiting on an incoming only calls basis.

Call Waiting/Cancel Call Waiting
Call Waiting - Allows a customer engaged in telephone conversation to be notified when a third party is attempting to call the customer. The notification is an audible Call Waiting (CW) tone to the CW customer. Audible ring is returned to the third party. CW service provides a hold feature where the CW customer may flash the switch hook and alternate between the original and the second call.
Cancel Call Waiting - This is used in conjunction with the CW feature and allows the customer to cancel the operation of CW for one call. The customer dials a cancel call waiting code, obtains stutter tone, and places a call normally. While Cancel Call Waiting is invoked, incoming calls receive a normal busy signal.

B. DESCRIPTION OF SERVICE

Centrex Management System (CMS)

A computer software program that provides the customer access to their Centrex database for the purpose of general database inquiry, move, add, delete, and change of station lines and generate Basic Management Reports without having service orders issued.

Centrex Plus DID numbers per number

DID is a feature that allows an incoming toll or DDD call (not FX or WATS) to reach a specific PBX station line without attendant assistance. With DID, the SPCS seizes a DID trunk and outpulses the station line number to the PBX.

Centrex Plus to Centrex Plus

When a customer orders a DFI between any two Centrex systems, they must have station lines and usage (for non-blocked) or the equivalent number of station lines and NARS (for blocked) to match the number of voice connections on the DFI.

Centrex Plus to IC Carrier

When a customer orders a DFI between Centrex systems and an IC Carrier, they must have station lines and usage (for non-blocked) or the equivalent number of station lines and NARS (for blocked) to match the number of voice connections on the DFI.

Centrex Plus to PBX/Key Blocked

When a customer orders a DFI between Centrex systems and key/PBX, they must have the equivalent number of station lines and NARS (for blocked) to match the number of voice connections on the DFI.

Centrex Plus to PBX/Key Non-Blocked

When a customer orders a DFI between Centrex systemsand key/PBX, they must have station lines and usage (for nonblocked) to match the number of voice connections on the DFI.

CFDA Incoming Only

Provides for forwarding of incoming only calls to a preselected telephone number, when the called station does not answer after a predetermined number of ringing cycles.

CLASS Anonymous Call Rejection

Does not allow an incoming call to ring into a customer's home if the caller has blocked their name and number from being shown on the Caller ID unit. It also routes that call to an announcement in the central office.

CLASS Call Waiting ID

Allows a customer with Caller Identification to receive name and number information on a call that is waiting. The name and number are displayed on customer provided equipment.

CLASS Calling Name & Number

Allows for the automatic delivery of a calling party's name and telephone number (including nonpublished and nonlisted telephone numbers) to the called customer, which gives the called customer an opportunity to decide whether to answer the call immediately or not. The name and number are displayed on customer provided equipment.

CLASS Calling Number Delivery

Allows for the automatic delivery of a calling party's telephone number (including nonpublished and nonlisted telephone numbers) to the called customer, which gives the called customer an opportunity to decide whether to answer the call immediately or not. The number is displayed on customer provided equipment.

B. DESCRIPTION OF SERVICE

CLASS Calling Number Delivery Blocking

When a line is equipped with per line blocking, the name and number of that line will not be delivered to any subscriber of Caller ID.

CLASS Continuous Redial

Allows a customer to dial a code that will cause the feature to automatically redial the last number the customer dialed. If the called number is busy, the feature will redial the called number for a limited period of time. A tone alerts the customer when the called number becomes available.

CLASS Last Call Return

Allows a customer to dial a code that will cause the feature to automatically redial the number of the last incoming call to that line, whether the call was answered or not. The customer does not have to know the number of the calling party. If the calling party's number is blocked, by the calling party, the service will not return the call. If the called number is busy, the feature will redial the called number for a limited period of time. A tone alerts the customer when the called line is available.

CLASS Priority Calling

Allows a customer to assign a maximum of 15 callers' telephone numbers to a special list. The customer will hear a distinctive ring at the customer's location when calls are received from callers' numbers on that list.

CLASS Selective Call Forwarding

Allows a customer to specify a special list of a maximum of 15 telephone numbers. Incoming calls placed to the customer from telephone numbers on that list will automatically be forwarded to a predefined telephone number. All other calls will be handled normally.

CLASS Selective Call Rejection

Enables a customer to reject call attempts from up to 15 numbers of calling parties by dialing a code and the telephone numbers of calls to be rejected. Any call attempts to the customer from these numbers will be prevented from terminating to the customer and will instead be connected to an announcement informing the caller that the call is not presently being accepted by the called party.

Common Equipment per 1.544 Mbps facility (DS1)

Connects the DS1 interface to the Centrex switch.

Conference Calling - Meet Me

Provides the ability to establish - at a predetermined time - a conference of up to 30 members. The conferees can be internal or external to the Customer/Business Group, but one conference member must always be a Centrex Plus station or a trunk in the same group.

Conference Calling - Preset

A Preset Conference is established when a Centrex Plus station user dials the directory number associated with the conference circuit. It can also be established by a POTS line or an incoming trunk if the customer desires. Up to 25 preselected stations are rung simultaneously. The members may be internal, external or a combination of both. The ability to initiate a Preset Conference is established by the station class of service. As conferees answer their telephones, the conference begins. Unanswered numbers will continue to ring, but with no audible ringback to those already in place. As conferees answer and are cut into the conference, a warning tone is heard by those already conferenced.

Conference Calling - Station Dial

Allows a customer to establish a conference call with up to six conferees, including the originator. Conferees may be inside or outside the system.

B. DESCRIPTION OF SERVICE

Custom Ringing

A primary directory number (PDN) and up to three secondary directory numbers (SDN) are assigned to a subscriber's line. When the PDN is called, standard 1FR ringing is applied to the line. When a SDN is called, one of the following three special ringing patterns is applied:

- 2 long rings
- 2 short rings, 1 long ring
- 1 short ring, 1 long ring, 1 short ring

Data Call Protection

Provides a no double connect option to the line, protecting data calls from interruption.

Dir Sta Sel/Busy Lamp Fld per arrangement

Adds improved answering-position functions to the electronic set by providing busy lamp status and direct station selection.

Directed Call Pickup with Barge-in

Direct call pick-up with Barge In permits a user to dial a code and station number and pick up a call that has been answered or is ringing at another telephone, provided the rung telephone permits dial pick-up.

Directed Call Pickup without Barge-in

Permits a user to dial a code and a station number to pick up a call that is ringing at another station.

Distinctive Ring/Distinctive Call Waiting

Enables a station user to determine the source of an incoming call.

Distinctive Ringing

Enables a station user to determine the source of an incoming call.

EBS - Set Interface - per station line

The card provides the communication control for the electronic set and is required per set.

Executive Busy Override

Allows a station user to gain access to a busy station.

Expensive Route Warning Tone

Provides a warning tone to indicate the selection of an expensive route.

Facility Restriction Level - per system

Determines calling privilege level associated with each station line.

Feature Display

Allows the user of a Digital Electronic Telephone Set (DETS) with display capability a method of determining the features and call appearances that are assigned to the buttons on a station.

Group Intercom

The feature Group Intercom allows a station abbreviated dialing to other station members within the same Group Intercom group.

Hot Line - per line

Allows equipped station lines the ability to automatically place a call to a pre-assigned number by going off-hook.

Hunting: Multiposition Circular Hunting

Distributes incoming calls over a group of telephone numbers in the same office. Incoming calls are routed in a predetermined order beginning with the dial number. If no idle line found by the end of the group, hunting begins with the 1st line in the group and stops with the line just prior to the line with the dialed number. If no lines are idle, a busy tone is given.

B. DESCRIPTION OF SERVICE

Hunting: Multiposition Hunt Queuing
This is incremental to Multiposition Hunting and is needed for the call to go to an announcement or music when no idle line is found.

Hunting: Multiposition Series Hunting
Distributes incoming calls over a group of telephone numbers in the same office. Incoming calls are routed in a predetermined order beginning with the dial number. If no idle line found by the end of the group, a busy tone is given.

Hunting: Multiposition with Announcement in Queue
This is incremental to Multiposition Hunting (Series or Circular). When no idle line is found, the incoming call will go into queue - Announcement will be provided in queue.

Hunting: Multiposition with Music in Queue
This is incremental to Multiposition Hunting (Series or Circular). When no idle line is found, the incoming call will go into queue - Music will be provided in queue.

Incoming Calls Barred
Restricts the port to outgoing service only. Incoming service is prohibited.

International Direct Dial Blocking
This option blocks directly dialed international calls from being completed.

ISDN Short Hunt
Permits incoming calls to hunt over a set of directory number appearances search of an idle directory number on the Digital (N) Electronic Telephone Set (DETS).

Line Side Answer Supervision
This option sends an "off-hook" supervisory signal to the pay station over a compatible loop when the called party answers the call. This signals the Smartset to start timing/billing the call. When the called party disconnects, an "on-hook" signal is detected and the reverse battery signal is returned to normal, telling the smartset to stop the timing and billing of the call.

Loudspeaker Paging - per trunk group
This feature permits MDC stations to dial an access code to connect to loudspeaker paging equipment via a trunk connection only.

Make Busy Arrangements - per group
Group Make Busy provides a means of making all terminals in a Multiline hunt group appear busy to incoming calls. It allows the customer to busy out the terminals in the hunt group by operating a key (customer provided) at the customer premises.

Make Busy Arrangements - per line
Random Make Busy provides a means of making lines appear busy to incoming calls. Allows the customer to busy out a line or group of lines in the hunt group by operating a key (customer provided) at the customer premises.

Message Center - per main station line
Provides message center functionality to the electronic set. System users access the message center via dialing a code.

Message Waiting Indication A/V
- Audible Waiting Indication - when a user goes off hook a stutter dial tone is provided to indicate a message is waiting.
- Visual Waiting Indication - provides a message waiting indication on an electronic set via a message waiting lamp.

B. DESCRIPTION OF SERVICE

Message Waiting Visual
Provides a message waiting indication on an electronic set via a message waiting lamp.

Music On Hold - per system
Provides Music on Hold capability to the system.

Network Speed Call
Allows each station user access to a single list of 1,000 preprogrammed numbers which can be shared by all stations in the system (not customer changeable).

Night Service Arrangement
Allows any line in the Night Answer Group to be picked up by any other line of the system.

Outgoing Calls Barred
This option restricts the port to incoming service only. Outgoing service is prohibited.

Outgoing Trunk Queuing
When an eligible call placed by a station or an incoming trunk cannot be completed because an idle outgoing trunk is not available, it is given Off Hook queue tone or announcement and is then placed in an Off Hook queue for an outgoing trunk. When a trunk becomes available, the call will be completed in the usual manner."

Privacy Release
Permits a user to establish a conference call among MADN members and an outside party by pressing an assigned key or dialing a code.

Query Time
This feature provides the current time and date on an electronic set display.

Speed Call 30 Number
Provides the capability for a customer to place a call to a predetermined telephone number by dialing a two digit code.

Speed Call 8 Number
Provides the capability for a customer to place a call to a predetermined telephone number by dialing a one digit code.

Speed Calling 1 Digit Controller
Allows the user to dial a standard access code plus a 1 digit abbreviated code corresponding to a frequently called telephone number. These numbers can be changed by the controller.

Speed Calling 1 Digit User
Allows the user to dial a standard access code plus a 1 digit abbreviated code corresponding to a frequently called telephone number. These numbers can be changed by the individual user.

Speed Calling 1# List Individual
Allows caller to call preprogrammed numbers by dialing a 1 digit code.

Speed Calling 2 Digit Controller
A list consisting of up to 30 controller changeable telephone numbers. The digits assigned are from 20 through 49. The user is part of a group sharing the speed call list.
All lines in the system will share one list. One line will be designated as the "owner".
Owner only can establish and change numbers on list.

B. DESCRIPTION OF SERVICE

Speed Calling 2 Digit User
Individual station users sharing a list of 30, 50, 0r 70 changeable telephone numbers.

Speed Calling 2# List Individual
Allows caller to call preprogrammed numbers by dialing a 2 digit code.

Station Camp-On Service - per main station+
Allows the electronic set user to call a busy line and place the caller on hold/camp against the busy party's line until they are free.

Station Message Detail Recording (SMDR)
SMDR provides detail on calls by station number that originate from a Centrex type common block. The station message detail may include: the calling station number, the called number, date, time of day, duration of call and carrier selected.

Three-Way Calling
Enables the customer to add a third party to an existing conversation without operator assistance. To add the third party, the customer flashes the switch hook once to place the second party on hold, receives a stutter dial tone, calls the third party's number, then flashes the switch to establish the three way connection.

Time and Date Display
The switch provides time and date to the station set. The Time and Date feature is available to attendant and station set users. To use this feature, the user presses the Time/Date button.

Time of Day Control for ARS
Provides a method for automatically changing the routing parameter according to a prespecified schedule.

Time of Day NCOS Update
Allows normal NCOS (Network Class of Service) values to be mapped on to new values that are based on time of day, day of the week, or day of the year.

Time of Day Routing - per line
Enables efficient use of facilities by allowing or denying route choices based on time of day.

Toll Restriction Service
Restricts port from making toll calls

Trunk Answer Any Station
(See Night Service Arrangement.)

Trunk Verification from Designated Station
Allows end users audible transmission level testing from selected trunks within a trunk group, limit of ten stations per system.

UCD in hunt group - per line
This is a type of hunting which provides for an even distribution of incoming calls among the available members of a hunt group. UCD hunt group includes Queuing, Music on Queue, and Delayed Announcement.

UCD with Music After Delay
For Centrex, caller hears music after delay announcement.

C. STUDY METHODOLOGY

The costs identified are direct costs which occur as a result of providing features. These include digital central office switch costs in the subscriber's serving wire center.

Central office switching feature costs are calculated by first determining incremental switching feature investments. These feature investments are obtained through the use of the Qwest Switching Cost Model (SCM) for digital stored program controlled central offices A detailed description of this program is provided in the model descriptions.

The switch investments include processor time, memory, and hardware appropriate for each feature. The investments are converted to monthly costs using monthly cost factors, e.g. land and building, which are applied through the use of the Windows Personal Cost Calculator (WINPC3) cost program.

The WINPC3 model develops Long Run Incremental Costs (LRIC) from investments and/or expenses associated with Qwest products and services. A detailed description of this program is provided in the workpapers.

The investments are converted to monthly costs using monthly cost factors, which are represented as investment based and expense based. Examples of investment based factors include Capital costs and Ad Valorem taxes. Capital costs consist of depreciation, income tax, and cost of money. Examples of expense based factors would include administration and business fee taxes.

The monthly cost for each feature is multiplied by the state demand to get the total state cost for each feature. All features costs are then summed to get the total feature cost in the state. This is then divided by the total number of lines in the state to get a feature cost per line port.

D. DESCRIPTION OF LONG RUN INCREMENTAL COSTS

Total Element Long Run Incremental Cost (TELRIC) studies are performed by Qwest to estimate the economic cost of providing network elements. The Qwest TELRIC studies identify the forward-looking costs associated with the provision of the total quantity of a network element in the long run. The forward-looking Qwest TELRIC studies identify the costs that are likely to be incurred in the future, and consider the latest forward-looking technologies and methods of operation that are currently available. These studies are *not* embedded or historical, and do not measure the impact of prior investment decisions by the corporation. The Qwest TELRIC studies also identify the *long run* costs associated with providing a network element--reflecting a time period over which all inputs (including changes in the size of facilities, levels of investment, etc.) can be adjusted.

Qwest TELRIC studies identify recurring and nonrecurring costs. Recurring costs are the ongoing costs associated with providing a network element. Recurring costs are generally investment-related and include both capital costs and operating expenses. These costs are often presented as a cost per month or per unit of usage (e.g., minute of use) and are incurred throughout the time period the network element is provided to a customer. *Nonrecurring costs* are the

one-time costs that are incurred at the time a customer establishes, disconnects or changes service. These costs normally result from a customer order, and are predominantly labor-related.

The Qwest recurring and nonrecurring TELRIC studies identify costs on a unitized basis and disaggregates the cost results into the following components:

D. DESCRIPTION OF LONG RUN INCREMENTAL COSTS (Cont.)

Total Direct Costs are the forward-looking costs that are caused by offering the network element in the long run. These costs would not be incurred if the network elements were not offered. Total Direct Costs reflect the per-unit forward looking cost associated with providing the entire network element in the most efficient manner, holding constant the production of all other network elements produced by the firm. For recurring

element costs Total Direct Costs include the capital costs (e.g., depreciation, return, taxes) and maintenance costs associated with the investment required to provision a network, along with other network element-specific costs such as product management expense. For nonrecurring costs, Total Direct Costs include the labor-related expenses associated with the provision of a network element, along with other network element-specific costs such as product management expense.

Directly Attributed Costs include network administration and engineering costs and various administrative costs such as the cost of general-purpose computers and accounting and finance expenses. These costs are not directly associated with a specific network element. However, these costs vary with the provision of all network elements, and are not common to the entire firm.

Total Element Long Run Incremental Costs (TELRIC) represent the sum of Total Direct Costs and Directly Attributable Costs. This measure of costs includes the forward-looking costs incurred in the provision of a network element. This measure of costs is consistent with TELRIC as defined by the FCC.

Common Costs are associated with the enterprise as a whole. These costs do vary based on the total size of the firm, but do not vary with the provisioning of individual network elements. These costs are avoidable only with the elimination of the entire firm, and are sometimes referred to as *general overhead costs*.

Fully Allocated Costs represent the sum of Total Element Long Run Incremental Cost Cost plus Common Costs (TELRIC + CC).

E. STUDY ASSUMPTIONS

1. All network investments are forward looking.
2. Switch investments are weighted between three switch types.
3. All costs displayed are represented on a per line basis.
4. Feature usage on unbundled ports will be similar to what is presently on Qwest's retail ports.

Study Name	*Cap Lease Port Charges*	
Study Requester	*Doug Gollehon*	
Type of Study	*TELRIC*	
Study ID	*5476*	
Cost Factor Group	*Interconnection*	
Study Applications		
Completion Date	*July 20, 2001*	
Cost Analyst	*Dave Bacheldor*	
Study Review	**Reviewer**	**Date**
	Jim DiManna	*July 20, 2001*
Models Used	**Model**	**Version**
	Wholesale Cost Program	*2.07*
	Cost Factor Databases	*00SD02E*
	Cost Factors Model (TELRIC)	*00V2*
	SCM	*03/21/01 (Vintage 9.21)*
Cost Factors Used	**Factor**	**Effective Date**
	Capital Recovery	*01/01*
	Maintenance	*01/01*
	Ad Valorem	*01/01*
	COE Land & Bldg	*01/01*
	Directly Assigned Factors	*01/01*
	Directly Attributable Factors	*01/01*
	Common	*01/01*
	Cost Of Money	*10.14%*
Inflation		
Major Cost Drivers		

Parameter File: Y:\Backup Srvr\SGAT Features\South Dakota\Features in Port\SD Cap Lease Port 5476.xls, Sheet "WINPC3 Parameters"
State(s): SD
Database Vintage: 00SD02E
Factors For: Interconnection
Report Type: ICM Format
Decimal Places: 4
Costs Format: Annual
Group Totals: Yes
ACF Input: Y:\Backup Srvr\SGAT Features\South Dakota\Features in Port\SD Cap Lease Port 5476.xls, Sheet "WINPC3 ACF Inputs"
ACF Output: Y:\Backup Srvr\SGAT Features\South Dakota\Features in Port\SD Cap Lease Port 5476.xls, Sheet "WINPC3 ACF Outputs"
Investment: Y:\Backup Srvr\SGAT Features\South Dakota\Features in Port\SD Cap Lease Port 5476.xls, Sheet "WINPC3 Investments"
Output: Y:\Backup Srvr\SGAT Features\South Dakota\Features in Port\SD Cap Lease Port 5476.xls, Sheet "WINPC3 Output"

State: South Dakota

Description	USOC	Loaded Investment	Direct Expense	Total Direct	Network Support	Directly Attributed	TELRIC	Common	TELRIC + Common
Cap Lease Port - Monthly		$0.0000	$0.3713	$0.3850	$0.0217	$0.0912	$0.4762	$0.0215	$0.4977

Row	7/20/01 5:03 PM South Dakota	Source or Calculation	Factor Value	Cap Lease Port - Monthly
			A	B
1	**Investment**	sl r"Total" cD		0.0000
2				
3	***Investment Based Costs***	***sl r"Total" cK***		0.0000
4				
5	Direct Expenses			0.3713
6	Miscellaneous Expenses			0.0000
7	Billing & Collection - PL			0.0000
8	***Investment Based + Direct Costs***			0.3713
9				
10	***Directly Assigned***			
11	Product Management Expense	cA*(r8-r6)	0.025565	0.0095
12	Sales Expense	cA*(r8-r6)	0.009225	0.0034
13	Product Advertising Expense	cA*(r8-r6)	0.000000	0.0000
14	Business Fees (Other Operating Taxes)	cA*(Sum(r8:r13)-r6)	0.002025	0.0008
15	***Directly Assigned Costs***	***Sum r11:r14***		0.0137
16				
17	***Total Direct Costs***	***r8 + r15***		0.3850
18				
19	***Directly Attributed***			
20	Network Operations	cA*(r17-r6)	0.040880	0.0157
21	Network Support Assets	cA*(r17-r6)	0.015364	0.0059
22	General Support Assets	cA*(r17-r6)	0.069508	0.0268
23	General Purpose Computers	cA*(r17-r6)	0.034714	0.0134
24	Uncollectible	cA*(r17-r6)	0.000401	0.0002
25	Accounting & Finance Expense	cA*(r17-r6)	0.008839	0.0034
26	Human Resources Expense	cA*(r17-r6)	0.008145	0.0031
27	Information Management Expense	cA*(r17-r6)	0.057009	0.0219
28	Intangibles	cA*(r17-r6)	0.002091	0.0008
29	***Directly Attributed Costs***	***Sum r20:r28***		0.0912
30				
31	***TELRIC***	***r17 + r29***		0.4762
32				
33	***Common***			
34	Executive Expense	cA*(r31-r6)	0.007805	0.0037
35	Planning Expense	cA*(r31-r6)	0.000580	0.0003
36	External Relations Expense	cA*(r31-r6)	0.013029	0.0062
37	Legal Expense	cA*(r31-r6)	0.006148	0.0029
38	Other Procurement Expense	cA*(r31-r6)	0.002359	0.0011
39	Research & Development Expense	cA*(r31-r6)	0.000036	0.0000
40	Other General and Admin Expense	cA*(r31-r6)	0.015212	0.0072
41	***Common Costs***	***Sum r34:r40***		0.0215
42				
43	***TELRIC + Common Costs***	***r31 + r41***		0.4977

7/20/01
South Dakota

Cap Lease Port Charges

Acct	FRC	Account Name	Investment	Depreciation	Cost Of Money	Income Tax	Ad Valorem	Maintenance	Switch RTU	Total Capital Costs

Cap Lease Port - Monthly

	Total	0.0000	0.0000	0.0000	0.0000	0.0000	0.0000	0.0000	0.0000

Section 2

Cost Calculations

Service:	**CAPITAL LEASE RTU - PER LINE PORT**
State Name:	SOUTH DAKOTA
2-Character Jurisdiction Abbreviation:	SD
Study Year:	2001
Study Completion Date:	JULY 2001

SECTION A

Capital Lease Right-to-Use (RTU) Purchases

Source: Qwest Network Services

LAMS reports showing application software purchases

Average Capital Lease RTU Purchases per Year	$68,642,647
Lease interest rate	8.00%
Payment period (months)	36

SECTION B

Working Lines

Source: SCM Core

Total Working Lines	17,379,681

CAPITAL LEASE RTU - PER LINE PORT

SOUTH DAKOTA

Applications Software Purchases

1. Average Capital Lease Purchases per Year	**$68,642,647**
2. Total Capital Lease Expense for each year's purchases	**$77,436,398**
Interest rate	8.00%
Term (months)	36
Monthly Payment	$2,151,011
3. Total Annual Capital Lease Expense	**$77,436,398**
Total annual capital lease expense for 1st year leases	$25,812,133
Total annual capital lease expense for 2nd year leases	$25,812,133
Total annual capital lease expense for 3rd year leases	$25,812,133
4. Total working lines	**17,379,681**
5. Monthly Capital Lease Port Expense	**$0.3713** *(to WINPC3 Investments)*

	A	B	C	D	E
1	Investment				
2	STUDY	Cap Lease Port Charges			
3	DATE	7/20/01			
4	GROUP	Cap Lease Port - Monthly			
5	COMMON	SD	0.3712975629	0.	0.

	A	B
1	Parameter	
2	SD	
3	7	
4	4	
5	Annual	1
6	Yes	
7	No	
8		
9	11	
10	5476	

	A	B	C	D	E	F	G	H	I	J	K	L	M
1	ACFIN												
2	00SD02E												
3	2124	DEPR-AVG	COM-AVG	IT-AVG	MTNC-TOT	RTU-SWIT	ADVAL	BLDG	LAND	PRODMAN	SALESEXP	ADVER	BF
4													

	N	O	P	Q	R	S	T	U	V	W	X	Y	Z
1													
2													
3	NTWKOP	NTWKST	GENLST	COMPTR	UNCOLL	ACCNT	HREXP	INTAN	EXEC	PLAN	EXTERN	INFOR	LEGAL
4													

	AA	AB	AC
1			
2			
3	PROCR	RDEXP	GENL
4			

	A	B	C	D	E	F	G	H	I	J	K	L	M
1	ACFOUT	Factors For: Interconnection											
2	*-Run Done With Database Vintage: 00SD02E, Dated: 02/15/01*												
3	*-Wholesale Cost Program (TELRIC) Data Base released 02/01 (00SD02E).*												
4	*-Factors loaded from Factors Model (Expense Module), Version 00V2.*												
5	*-CAPITAL RECOVERY factors released 01/01 and based on 10.14% Cost*												
6	*Of Money. No 1-10 year factors developed.*												
7	*-MAINTENANCE factors released 01/01.*												
8	*-RTU factors released 02/01.*												
9	*-AD VALOREM Tax released 01/01.*												
10	*-DIRECTLY ASSIGNED expense factors released 01/01.*												
11	*-BUSINESS FEES released 01/01.*												
12	*-COMMON Expense released 01/01.*												
13	*-TOTAL INSTALLED FACTORS (TIF) released 01/01.*												
14	*-POWER investment factors released 01/01.*												
15	*-SALES TAX released 01/01.*												
16	*-TELCO Engineering factors released 01/01.*												
17	*-INTEREST DURING CONSTRUCTION released 01/01.*												
18	*-LAND AND BUILDING factors released 01/01.*												
19	*-DIRECTLY ATTRIBUTABLE expense factors released 01/01.*												
20	*-SALES EXPENSE factor released 01/01.*												
21	*-PRODUCT MANAGEMENT factor released 01/01.*												
22	*-BILLING & COLLECTION factor released 01/01.*												
23	*-PROVISIONING factors released 01/01.*												
24	*-TELEPHONE PLANT INDEX released 01/01.*												
25	*-STRUCTURE RATIO released 01/01.*												

	A	B	C	D	E	F	G	H	I	J	K	L	M	N	O
37															
38	State:	South Dakota													
39															
40	ACCOUNTS	DEPR-AVG	COM-AVG	IT-AVG	MTNC-TOT	RTU-SWIT	ADVAL	BLDG	LAND	PRODMAN	SALESEXP	ADVER	BF	NTWKOP	NTWKST
41	2124	0.164850	0.047620	0.018008	0.000000	0.000000	0.008613	0.000000	0.000000	0.025565	0.009225	0.000000	0.002025	0.040880	0.015364
42															
43															
44															

	P	Q	R	S	T	U	V	W	X	Y	Z	AA	AB	AC	AD
37															
38															
39															
40	**GENLST**	**COMPTR**	**UNCOLL**	**ACCNT**	**HREXP**	**INTAN**	**EXEC**	**PLAN**	**EXTERN**	**INFOR**	**LEGAL**	**PROCR**	**RDEXP**	**GENL**	
41	0.069508	0.034714	0.000401	0.008839	0.008145	0.002091	0.007805	0.000580	0.013029	0.057009	0.006148	0.002359	0.000036	0.015212	
42															
43															
44															

Section 3

Source Data

QW

Capital Lease RTU Cost per Working Line

Year	Total 377 Capital Lease (from LAMS)	LNP (from LAMS)	Total 377 less LNP	ISDN RTUs	Total 377 less LNP and ISDN RTUs
1998	91,052,132	37,654,369	53,397,762		
1999	94,041,105	24,417,828	69,623,277		
2000	138,331,323	25,336,312	112,995,010		
Average Capital Lease RTU Purchased per Year			**$ 78,672,017**	$ 10,029,370	**$ 68,642,647**
Interest Expense Paid for 36 Month Period					
Interest Rate *				8.00%	
Monthly Payment including Interest for 36 Months				$2,151,011	
* Payment Period of 36 Months				36	
Total Capital Lease Expense including Interest for 3 Years				$ 77,436,398	
Divided by 3 Years per Lease				$ 3	
Total Annual Expense including Interest for Yr 1 Leases				$ 25,812,133	
Total Annual Expense including Interest for Yr 2 Leases				$ 25,812,133	
Total Annual Expense including Interest for Yr 3 Leases				$ 25,812,133	
Total Capital Lease Expense per Year including Interest					**$ 77,436,398**
Total Working Lines					**17,379,681**
Applications Software per Working Line per Month					**$ 0.3713**

MODEL DESCRIPTIONS

1. QWEST SWITCHING COST MODEL:

The Switching Cost Model (SCM) is a set of menu driven PC engineering cost models developed in the QWEST Service Costs and Economic Analysis organization (SCEA). SCM provides unit investments for various services and features provided by the DMS-10, DMS-100, DMS-200, DMS-100/200, and 5ESS switching equipment. The model has a Features module which provides unit investments for features (e.g., Custom Calling, MVP, Centrex).

SCM Core is the first of three major processes in the SCM Model. SCM Core determines the Average Busy Season, Busy Hour, unit investments by functional category. Other models use the Busy Hour investments as input. The SCM Calls process of the model calculates investments for call setup and conversation CCS. The SCM Features process of the model calculates unit investments for central office features.

The SCM Features process develops investments for features by using the functional category unit investments created in SCM Core along with inputs provided by the SCM Features model user. There is an investment developed for each part of the feature, for example, activation, deactivation, and call attempt. The SCM Features process determines ABSBH investment associated with a feature by partitioning the feature into its components and determining the components not recovered by other rate elements. Cost of the feature must cover those components not recovered by other rate elements. The subscribers busy hour use of the feature drives the investments required. SCM displays most feature costs as an investment per line, consistent with the rate plans for the features. The investments provided also contain investment loadings from WINPC3 of Power, Sales Tax, TELCO, and Interest During Construction.

The Switching Cost Model (SCM) provides QWEST with a flexible and consistent process to provide switching costs suitable to develop price floors. SCM applies long run incremental costing principles for cost development, with consideration given to anticipated long run demand. This approach yields costs that are an appropriate price floor, allowing QWEST to make proper pricing decisions for its services.

2. Retail Cost Program (RCP):

The Retail Cost Program (RCP) develops retail costs from investments and/or expenses associated with QWEST products and services.

The RCP will apply investment loadings and annual cost factors, as applicable, to an investment and/or expense. The program calculates Direct Costs (TSLRIC), Network Support Costs, Attributable Costs, and Fully Allocated Costs resulting from an investment or expense.

Model Definitions

SCM Definitions:

INVESTMENT: An investment is the amount of capital used to purchase equipment and material to provide a service.

ENGINEERED FURNISHED & INSTALLED (EF&I): An Engineered, Furnished and Installed investment includes installation by the Vendor: An EF&I investment includes a dollar amount for the equipment, material, engineering, furnishing (delivery and/or supply) and installation.

TOTAL INSTALLED INVESTMENT (TII): A TII investment includes a dollar amount for equipment, material, engineering, furnishing & installation as well as a dollar amount (if applicable) for Power, Sales Tax, Telco labor and Interest During Construction (IDC).

RCP Definitions:

EXPENSE: An expense is the amount of non-capitalized dollars associated with the provision of a product or service.

INFLATION: Inflation is an increase in the amount of an investment from a base year to the study year. Inflation results from increases in the cost of money, material, or any other items impacting the value of an investment. The model can apply inflation to EF&I or Total Installed investments.

LOADING FACTORS: Loading factors applied to an EF&I investment provide the additional dollar amounts to bring an EF&I investment to the Total Installed Investment level.

POWER: The power factor estimates the investment required for Central Office back up power equipment (used for EF&I Central Office Equipment [COE] accounts only).

SALES TAX: The sales tax factor provides the amount of sales tax paid on vendor provided material and equipment (used for all accounts).

TELCO: The TELCO factor develops the dollar amount of Qwest engineering and labor involved with vendor installation (used for EF&I accounts only).

INTEREST DURING CONSTRUCTION: The interest during construction factor estimates the amount of interest that accrues on construction dollar amounts until completion (used with all accounts).

LAND & BUILDING: The land and building factors applied to a Total Installed Central Office equipment investment recovers the investment in Central Office land and buildings. Annual cost factors are applicable to the land and building investments (used with COE accounts only).

ANNUAL COST FACTORS: Annual cost factors identify the annual costs associated with Total Installed Investments. There are two types of Annual Cost Factors (Investment based and Expense based). Annual cost factors are appropriate for use with all accounts.

INVESTMENT BASED FACTORS: Investment based annual cost factors applied to a Total Installed Investment identify annual costs directly related to the use of an investment.

MAINTENANCE COSTS: Maintenance costs represent the cost of upkeep, trunk and line testing, rearrangements and changes.

CAPITAL COSTS (CAPCOST): Capital costs are annual or monthly costs associated with recovery of a total installed investment.

AD VALOREM TAX: The ad valorem factor estimates the annual "property tax" applicable to an investment.

EXPENSE BASED FACTORS: These factors applied to an expense created by the Investment Based Factors will

identify additional expenses resulting from the provision of a service.

SALES EXPENSE: The sales expense factor determines the amount of expense associated with making a sale. It develops the relevant expense pertaining to the cost of a sale up to the "hand shake" as well as a portion of capital costs. We divide this expense by total direct cost.

PRODUCT MANAGEMENT EXPENSE: The product management factor develops the amount of expense associated with managing the products of the business. This expense includes all expense relevant to Product Management, as well as a portion of capital costs. We divide this expense by total direct cost.

ADMINISTRATION: The administration expense factor develops the administration expense associated with COE, Outside Plant (OSP), and coin services.

SALES COMPENSATION EXPENSE: The sales compensation factor develops the amount of sales compensation resulting from successfully completing a business sale. This is a revenue based factor that includes compensation for business sales only. We divide sales compensation by total business revenues.

RIGHT TO USE FEES: The right to use (RTU) fees factor estimates some of the software expense associated with the purchase of digital switches.

BUSINESS FEES: The business fees factor develops a dollar amount associated with state fees and taxes assessed on the aggregate revenue of those states that impose such fees and taxes.

COMMON: Common calculates expenses common to the firm.

South Dakota Public Utilities Commission
Docket No. TC 01_____
Qwest Corporation

Attachment 9

Study No. 5431
Channel Regeneration



CHANNEL REGENERATION

SOUTH DAKOTA
JULY 2001

Study ID: 5431

QWEST CORPORATION
Policy and Law

Table of Contents

	Page
I. Executive Summary	3
A. Purpose Scope, and Application	3
B. Description of Service	3
C. Study Methodology	3
D. Description of Long Run Incremental Costs	3
E. Study Assumptions	4
II. Rate Elements	5
III. Work Papers	6
Study Summary	6
Input Sheet	7
Labor and Materials	10
Regeneration	11
WCP Non-Recurring	12
WCP Recurring	13
WCP Maintenance	15
Input Confiurations	16

Executive Summary

A. PURPOSE, SCOPE, AND APPLICATION

The purpose of this study is to determine the expenses and recurring costs that will be incurred by Qwest to provide Channel Regeneration for customers.

This study develops Qwest average costs. Costs are based on a per unit basis depending upon which element is being requested.

B. DESCRIPTION OF SERVICE

Channel Regeneration is required when the distance from the leased physical space (for Caged or Cageless Physical Collocation) or from the collocated equipment (for Virtual Collocation) to the U S WEST network is of sufficient length to require regeneration.

Cost Elements

- Channel Regeneration - Available as an option when the Co-Provider requests the DS1/DS3 capable loop. This regenerator reshapes and amplifies the DS1/DS3 signal to overcome losses in wiring between electronic equipment within the U S WEST wire center. The losses are a function of cable gauge and length. The DS1/DS3 regenerator Unbundled Network Element (UNE) terminates on the ICDF frame. The DS1/DS3 regenerator can be ordered when the Co-Provider is either combining U S WEST UNEs and/or connecting to their collocated equipment. Costs were calculated using actual regenerator labor and material costs.

C. Study Methodology

Costs were developed from material, engineering and installation labor costs provided by Subject Matter Experts (SME's) in Central Office Engineering and Outside Plant Engineering.

Monthly maintenance costs were developed by taking the element - specific expense and applying the account - code specific maintenance.

The investments/expenses from the above items were then entered into the WCP (Wholesale Cost Program) model, developed and used within U S WEST Communications.

D. DESCRIPTION OF LONG RUN INCREMENTAL COSTS

Long Run Incremental Cost (LRIC) is the method QWEST Corporation uses to estimate product and service costs. It provides a measurement of costs over a period of time long enough to fully adjust to changes of output (including changes in the size of facilities, levels of investment, etc.) in order to optimally accommodate this change. This methodology is forward looking in nature (i.e. LRIC uses the latest technology costs or replacement costs.) Since LRIC is forward looking, it does *not* measure historic investment decisions of the corporation.

The Qwest LRIC format disaggregates the cost results on a unitized basis into the components shown below:

Total Service Long Run Incremental Cost (TSLRIC) --Total Service Long Run Incremental Cost is the forward looking cost avoided (or added) by discontinuing (or offering) an entire service or group of services in the most efficient manner, holding constant the production of all other services produced by the firm. This cost is often referred to in economic terms as direct cost.

Shared Cost (SC)-- The cost associated with the provision of multiple services (service family).

This cost is not volume sensitive and is eliminated only if the entire service family is discontinued.

Total Service Long Run Incremental Costs plus Shared Costs (TSLRIC+SC)--The Total Service Long Run Incremental Costs for a service plus the Shared Costs of a family of services.

Total Element Long Run Incremental Cost (TELRIC) -- Total Element Long Run Incremental Cost, as defined by the Federal Communications Commission, is the sum of the forward looking direct cost incurred in the production of a network element (as opposed to an entire service), attributed costs considered as shared cost under TSLRIC terminology and selected administrative costs considered as common under TSLRIC terminology.

Common Cost (CC)

For **TSLRIC** purposes, common costs are the current cost incurred for the benefit of the enterprise as a whole. This cost does not vary with the provision of a service or a service family. These costs are sometimes referred to as *general overhead costs.* The Common Cost added to the TSLRIC + SC produces a **Fully Allocated Cost (FAC)** as required by Commission rules.

For **TELRIC** purposes, common costs are the current cost incurred for the benefit of the enterprise as a whole, after those cost that vary with the provisioning of individual network elements are removed. The costs removed from common for TELRIC purposes are included in the TELRIC itself. **Total Long Run Incremental Cost plus TELRIC common costs (TELRIC + CC)** form the basis for pricing Interconnection network elements. TELRIC + CC is the equivalent of fully allocated cost as the term is applied to network elements.

Typically, the cost identified by these cost categories include capital costs for depreciation, return, and income taxes. TSLRIC also includes ongoing operating costs for: administration expense, product management expense, pre sales expense, and business fees.

E. Study Assumptions

1. All costs are forward looking.
2. See "Inputs" worksheet.

South Dakota Public Utilities Commission
Docket No. TC 01_____
Qwest Corporation

Attachment 9

Study No. 5431
Channel Regeneration



CHANNEL REGENERATION

SOUTH DAKOTA
JULY 2001

Study ID: 5431

QWEST CORPORATION
Policy and Law

Table of Contents

	Page
I. Executive Summary	3
A. Purpose Scope, and Application	3
B. Description of Service	3
C. Study Methodology	3
D. Description of Long Run Incremental Costs	3
E. Study Assumptions	4
II. Rate Elements	5
III. Work Papers	6
Study Summary	6
Input Sheet	7
Labor and Materials	10
Regeneration	11
WCP Non-Recurring	12
WCP Recurring	13
WCP Maintenance	15
Input Confiurations	16

Executive Summary

A. PURPOSE, SCOPE, AND APPLICATION

The purpose of this study is to determine the expenses and recurring costs that will be incurred by Qwest to provide Channel Regeneration for customers.

This study develops Qwest average costs. Costs are based on a per unit basis depending upon which element is being requested.

B. DESCRIPTION OF SERVICE

Channel Regeneration is required when the distance from the leased physical space (for Caged or Cageless Physical Collocation) or from the collocated equipment (for Virtual Collocation) to the U S WEST network is of sufficient length to require regeneration.

Cost Elements

- Channel Regeneration - Available as an option when the Co-Provider requests the DS1/DS3 capable loop. This regenerator reshapes and amplifies the DS1/DS3 signal to overcome losses in wiring between electronic equipment within the U S WEST wire center. The losses are a function of cable gauge and length. The DS1/DS3 regenerator Unbundled Network Element (UNE) terminates on the ICDF frame. The DS1/DS3 regenerator can be ordered when the Co-Provider is either combining U S WEST UNEs and/or connecting to their collocated equipment. Costs were calculated using actual regenerator labor and material costs.

C. Study Methodology

Costs were developed from material, engineering and installation labor costs provided by Subject Matter Experts (SME's) in Central Office Engineering and Outside Plant Engineering.

Monthly maintenance costs were developed by taking the element - specific expense and applying the account - code specific maintenance.

The investments/expenses from the above items were then entered into the WCP (Wholesale Cost Program) model, developed and used within U S WEST Communications.

D. DESCRIPTION OF LONG RUN INCREMENTAL COSTS

Long Run Incremental Cost (LRIC) is the method QWEST Corporation uses to estimate product and service costs. It provides a measurement of costs over a period of time long enough to fully adjust to changes of output (including changes in the size of facilities, levels of investment, etc.) in order to optimally accommodate this change. This methodology is forward looking in nature (i.e. LRIC uses the latest technology costs or replacement costs.) Since LRIC is forward looking, it does *not* measure historic investment decisions of the corporation.

The Qwest LRIC format disaggregates the cost results on a unitized basis into the components shown below:

Total Service Long Run Incremental Cost (TSLRIC) --Total Service Long Run Incremental Cost is the forward looking cost avoided (or added) by discontinuing (or offering) an entire service or group of services in the most efficient manner, holding constant the production of all other services produced by the firm. This cost is often referred to in economic terms as direct cost.

Shared Cost (SC)-- The cost associated with the provision of multiple services (service family).

This cost is not volume sensitive and is eliminated only if the entire service family is discontinued.

Total Service Long Run Incremental Costs plus Shared Costs (TSLRIC+SC)--The Total Service Long Run Incremental Costs for a service plus the Shared Costs of a family of services.

Total Element Long Run Incremental Cost (TELRIC) -- Total Element Long Run Incremental Cost, as defined by the Federal Communications Commission, is the sum of the forward looking direct cost incurred in the production of a network element (as opposed to an entire service), attributed costs considered as shared cost under TSLRIC terminology and selected administrative costs considered as common under TSLRIC terminology.

Common Cost (CC)

For **TSLRIC** purposes, common costs are the current cost incurred for the benefit of the enterprise as a whole. This cost does not vary with the provision of a service or a service family. These costs are sometimes referred to as *general overhead costs.* The Common Cost added to the TSLRIC + SC produces a **Fully Allocated Cost (FAC)** as required by Commission rules.

For **TELRIC** purposes, common costs are the current cost incurred for the benefit of the enterprise as a whole, after those cost that vary with the provisioning of individual network elements are removed. The costs removed from common for TELRIC purposes are included in the TELRIC itself. **Total Long Run Incremental Cost plus TELRIC common costs (TELRIC + CC)** form the basis for pricing Interconnection network elements. TELRIC + CC is the equivalent of fully allocated cost as the term is applied to network elements.

Typically, the cost identified by these cost categories include capital costs for depreciation, return, and income taxes. TSLRIC also includes ongoing operating costs for: administration expense, product management expense, pre sales expense, and business fees.

E. Study Assumptions

1. All costs are forward looking.
2. See "Inputs" worksheet.

Channel Regeneration

Rate Elements

State: SOUTH DAKOTA

	RC	NRC	Rate Mapping RC	Rate Mapping NRC
Channel Regeneration (Per Repeater)				
DS1 Regeneration	$ 2.40	$ 464.72	='R - WCP Recurring'!$C$69+'R - WCP Maintenance'!$C$48	='R - WCP Non-Recurring'!$C$43
DS3 Regeneration	$ 7.52	$ 1,758.09	='R - WCP Recurring'!$D$69+'R - WCP Maintenance'!$D$48	='R - WCP Non-Recurring'!$D$43

Channel Regeneration

Study Name	*CHANNEL REGENERATION*	
Study Requester		
Type of Study	*TELRIC*	
Study ID	*5431*	
Cost Factor Group	*Interconnection*	
Study Applications		
Completion Date	*July 11, 2001*	
Cost Analyst		
Study Review	**Reviewer**	**Date**
		July 11, 2001
Cost Models Used	**Model**	**Version and/or Release Date**
	Wholesale Cost Program	*01/08/01 (Version 00SD02E)*
	Cost Factor Databases	*01/02/01 (Vintage: 00SD02E)*
	Cost Factors Model (TELRIC)	
Cost Factors Used	**Factor**	**Effective Date**
	Capital Recovery	*01/01*
	Maintenance	*01/01*
	Ad Valorem	*01/01*
	Power	*01/01*
	Sales Tax	*01/01*
	Interest During Construction	*01/01*
	COE Land & Bldg	*01/01*
	Directly Assigned Factors	*01/01*
	Directly Attributable Factors	*01/01*
	Common	*01/01*
	Cost Of Money	*10.14%*
Inflation		
Major Cost Drivers		

Inputs

Study Information	Value
Filing Month	JULY
Filing Year	2001
State	SD
State Full Name	SOUTH DAKOTA
Run Date	7/11/01
Vintage	*00SD02E*
Study ID	5431

Model Assumptions	Value	Source
Work Completion Interval	90	
USWI Labor Percent	*50%*	
DS1 Repeaters Utilization		
Repeater Bay	70%	SME
Repeater Shelf	70%	SME
Repeater Card	100%	SME
Connecting Cable	70%	SME
Shelves per Bay	11	SME
Repeaters Per Shelf	28	SME
DS3 Repeaters Utilization		
Repeater Bay	70%	SME
Repeater Shelf	70%	SME
Repeater Card	100%	SME
Connecting Cable	100%	SME
Shelves per Bay	11	SME
Repeaters Per Shelf	16	SME

Labor Rate Inputs	Value	Source
Connecting Cable DS1 Repeaters	*$ 73.71*	= Labor Rates line 27
Place connector	*$ 6.38*	= Labor Rates line 15

Configuration Inputs	Value	Source
Material Cost		
7' DS1 Repeater Bay Finished Services (5-5-5)	$ 4,610.78	= 'Input - Configurations'
DS1 Unloaded Repeater Chassis 28 Positions	$ 261.46	= 'Input - Configurations'
DS1 Module for Finished Service Repeater	$ 233.16	= 'Input - Configurations'
7' DS3 Repeater Bay Finished Services (5-5-5)	$ 6,027.80	= 'Input - Configurations'
DS3 Unloaded Repeater Chassis 28 Positions	$ 431.47	= 'Input - Configurations'
DS3 Module for Finished Service	$ 1,192.76	= 'Input - Configurations'
Engineering Labor Cost		
7' DS1 Repeater Bay Finished Services (5-5-5)	$ 601.11	= 'Input - Configurations'
DS1 Unloaded Repeater Chassis 28 Positions	$ 106.00	= 'Input - Configurations'
DS1 Module for Finished Service Repeater	$ 106.00	= 'Input - Configurations'
7' DS3 Repeater Bay Finished Services (5-5-5)	$ 601.11	= 'Input - Configurations'
DS3 Unloaded Repeater Chassis 28 Positions	$ 190.06	= 'Input - Configurations'
DS3 Module for Finished Service	$ 106.00	= 'Input - Configurations'

Collocation Model Inputs	Value	Source
Power Adjustment		**Collocation Model**
Power Maint Expense Adj	0.003256	G. Investment Factors

Factors	Value
WCP Version	2.07
Cost of Money	10.14%

Capital Recovery	01/01
Maintenance	01/01
Ad Valorem	01/01
Power	01/01
Sales Tax	01/01
Interest During Construction	01/01
COE Land & Bldg	01/01
Directly Assigned Factors	01/01
Directly Attributable Factors	01/01
Common	01/01
Vintage	*00SD02E*
Investment Loadings	
Power	0.069700
Sales Tax	0.056400
Interest During Construction	0.006100
COE Land And Building Investment	
Building	0.053600
Land	0.001400
Investment Based Monthly Direct Costs	
Depreciation	0.109717
Cost Of Money	0.045455
Income Tax Expense	0.017189
Maintenance	0.032498
Ad Valorem Tax	0.008613
COE Land And Building Cost	
COE Building	0.159969
COE Land	0.163967
Directly Assigned	
Product Management Expense	0.025565
Sales Expense	0.009225
Product Advertising Expense	0.000000
Business Fees (Other Operating Taxes)	0.002025
Directly Attributed	
Network Operations	0.040880
Network Support Assets	0.015364
General Support Assets	0.069508
General Purpose Computers	0.034714
Uncollectible	0.000401
Accounting & Finance Expense	0.008839
Human Resources Expense	0.008145
Information Management Expense	0.057009
Intangibles	0.002091
State Prescribed Directly Attributed	0.000000
Common	
Executive Expense	0.007805
Planning Expense	0.000580
External Relations Expense	0.013029
Legal Expense	0.006148
Other Procurement Expense	0.002359
Research & Development Expense	0.000036
Other General and Admin Expense	0.015212

State Prescribed Common	0.000000

Repeater Labor and Materials

DS1 Repeaters **(11 shelves per bay; 28 repeaters per shelf)**

Repeater Bay		
Material	$ 4,610.78	
Labor	$ 601.11	
Total		**$ 5,211.89**
Repeater Shelf		
Material	$ 261.46	
Labor	$ 106.00	
Total		**$ 367.46**
Repeater Card		
Material	$ 233.16	
Labor	$ 106.00	
Total		**$ 339.16**

11 shelves
28 repeaters

DS3 Repeaters **(11 shelves per bay; 16 repeaters per shelf)**

Repeater Bay		
Material	$ 6,027.80	
Labor	$ 601.11	
Total		**$ 6,628.91**
Repeater Shelf		
Material	$ 431.47	
Labor	$ 190.06	
Total		**$ 621.53**
Repeater Card		
Material	$ 1,192.76	
Labor	$ 106.00	
Total		**$ 1,298.76**

11 shelves
16 repeaters

Channel Regeneration

Study Name	*CHANNEL REGENERATION*	
Study Requester		
Type of Study	*TELRIC*	
Study ID	*5431*	
Cost Factor Group	*Interconnection*	
Study Applications		
Completion Date	*July 11, 2001*	
Cost Analyst		
Study Review	**Reviewer**	**Date**
		July 11, 2001
Cost Models Used	**Model**	**Version and/or Release Date**
	Wholesale Cost Program	*01/08/01 (Version 00SD02E)*
	Cost Factor Databases	*01/02/01 (Vintage: 00SD02E)*
	Cost Factors Model (TELRIC)	
Cost Factors Used	**Factor**	**Effective Date**
	Capital Recovery	*01/01*
	Maintenance	*01/01*
	Ad Valorem	*01/01*
	Power	*01/01*
	Sales Tax	*01/01*
	Interest During Construction	*01/01*
	COE Land & Bldg	*01/01*
	Directly Assigned Factors	*01/01*
	Directly Attributable Factors	*01/01*
	Common	*01/01*
	Cost Of Money	*10.14%*
Inflation		
Major Cost Drivers		

Inputs

Study Information	Value
Filing Month	JULY
Filing Year	2001
State	SD
State Full Name	SOUTH DAKOTA
Run Date	7/11/01
Vintage	*00SD02E*
Study ID	5431

Model Assumptions	Value	Source
Work Completion Interval	90	
USWI Labor Percent	*50%*	
DS1 Repeaters Utilization		
Repeater Bay	70%	SME
Repeater Shelf	70%	SME
Repeater Card	100%	SME
Connecting Cable	70%	SME
Shelves per Bay	11	SME
Repeaters Per Shelf	28	SME
DS3 Repeaters Utilization		
Repeater Bay	70%	SME
Repeater Shelf	70%	SME
Repeater Card	100%	SME
Connecting Cable	100%	SME
Shelves per Bay	11	SME
Repeaters Per Shelf	16	SME

Labor Rate Inputs	Value	Source
Connecting Cable DS1 Repeaters	*$ 73.71*	= Labor Rates line 27
Place connector	*$ 6.38*	= Labor Rates line 15

Configuration Inputs	Value	Source
Material Cost		
7' DS1 Repeater Bay Finished Services (5-5-5)	$ 4,610.78	= 'Input - Configurations'
DS1 Unloaded Repeater Chassis 28 Positions	$ 261.46	= 'Input - Configurations'
DS1 Module for Finished Service Repeater	$ 233.16	= 'Input - Configurations'
7' DS3 Repeater Bay Finished Services (5-5-5)	$ 6,027.80	= 'Input - Configurations'
DS3 Unloaded Repeater Chassis 28 Positions	$ 431.47	= 'Input - Configurations'
DS3 Module for Finished Service	$ 1,192.76	= 'Input - Configurations'
Engineering Labor Cost		
7' DS1 Repeater Bay Finished Services (5-5-5)	$ 601.11	= 'Input - Configurations'
DS1 Unloaded Repeater Chassis 28 Positions	$ 106.00	= 'Input - Configurations'
DS1 Module for Finished Service Repeater	$ 106.00	= 'Input - Configurations'
7' DS3 Repeater Bay Finished Services (5-5-5)	$ 601.11	= 'Input - Configurations'
DS3 Unloaded Repeater Chassis 28 Positions	$ 190.06	= 'Input - Configurations'
DS3 Module for Finished Service	$ 106.00	= 'Input - Configurations'

Collocation Model Inputs	Value	Source
Power Adjustment		**Collocation Model**
Power Maint Expense Adj	0.003256	G. Investment Factors

Factors	Value
WCP Version	2.07
Cost of Money	10.14%

Capital Recovery	01/01
Maintenance	01/01
Ad Valorem	01/01
Power	01/01
Sales Tax	01/01
Interest During Construction	01/01
COE Land & Bldg	01/01
Directly Assigned Factors	01/01
Directly Attributable Factors	01/01
Common	01/01
Vintage	*00SD02E*
Investment Loadings	
Power	0.069700
Sales Tax	0.056400
Interest During Construction	0.006100
COE Land And Building Investment	
Building	0.053600
Land	0.001400
Investment Based Monthly Direct Costs	
Depreciation	0.109717
Cost Of Money	0.045455
Income Tax Expense	0.017189
Maintenance	0.032498
Ad Valorem Tax	0.008613
COE Land And Building Cost	
COE Building	0.159969
COE Land	0.163967
Directly Assigned	
Product Management Expense	0.025565
Sales Expense	0.009225
Product Advertising Expense	0.000000
Business Fees (Other Operating Taxes)	0.002025
Directly Attributed	
Network Operations	0.040880
Network Support Assets	0.015364
General Support Assets	0.069508
General Purpose Computers	0.034714
Uncollectible	0.000401
Accounting & Finance Expense	0.008839
Human Resources Expense	0.008145
Information Management Expense	0.057009
Intangibles	0.002091
State Prescribed Directly Attributed	0.000000
Common	
Executive Expense	0.007805
Planning Expense	0.000580
External Relations Expense	0.013029
Legal Expense	0.006148
Other Procurement Expense	0.002359
Research & Development Expense	0.000036
Other General and Admin Expense	0.015212

State Prescribed Common	0.000000

Repeater Labor and Materials

DS1 Repeaters **(11 shelves per bay; 28 repeaters per shelf)**

Repeater Bay		
Material	$ 4,610.78	
Labor	$ 601.11	
Total		**$ 5,211.89**
Repeater Shelf		
Material	$ 261.46	
Labor	$ 106.00	
Total		**$ 367.46**
Repeater Card		
Material	$ 233.16	
Labor	$ 106.00	
Total		**$ 339.16**

11 shelves
28 repeaters

DS3 Repeaters **(11 shelves per bay; 16 repeaters per shelf)**

Repeater Bay		
Material	$ 6,027.80	
Labor	$ 601.11	
Total		**$ 6,628.91**
Repeater Shelf		
Material	$ 431.47	
Labor	$ 190.06	
Total		**$ 621.53**
Repeater Card		
Material	$ 1,192.76	
Labor	$ 106.00	
Total		**$ 1,298.76**

11 shelves
16 repeaters

Regeneration Costs, Per Repeater

Element	Description	Material + Labor	Unit Capacity	Material + Labor per Unit of Capacity	Units of Capacity Required	Avg. Feet	Total Material + Labor	Utilization Factor	Investment or Direct Expense
		A	B	C=A/B	D	E	F=CXDXE	G	H=F/G
DS1 REPEATERS - RECURRING									
Repeater Bay		$ 5,211.89	308	$ 16.92	1	N/A	$ 16.92	70%	$ 24.17
Repeater Shelf		$ 367.46	28	$ 13.12	1	N/A	$ 13.12	70%	$ 18.75
Total per DS1 Regenerator - Recurring									**$ 42.92**
DS1 REPEATERS - NONRECURRING									
Repeater Card		$ 339.16	1	$ 339.16	1	N/A	$ 339.16	100%	$ 339.16
Connecting Cable		$ 73.71	28	$ 2.63	2	N/A	$ 5.27	70%	$ 7.52
Total per DS1 Regenerator - Nonrecurring									**$ 346.68**
DS3 REPEATERS RECURRING									
Repeater Bay		$ 6,628.91	176	$ 37.66	1	N/A	$ 37.66	70%	$ 53.81
Repeater Shelf		$ 621.53	16	$ 38.85	1	N/A	$ 38.85	70%	$ 55.49
Total per DS3 Regenerator - Recurring									**$ 109.30**
DS3 REPEATERS NONRECURRING									
Repeater Card		$ 1,298.76	1	$ 1,298.76	1	N/A	$ 1,298.76	100%	$ 1,298.76
Connecting Cable		$ 6.38	1	$ 6.38	2	N/A	$ 12.75	100%	$ 12.75
Total per DS3 Regenerator - Nonrecurring									**$ 1,311.51**

Channel Regeneration

WCP Non-Recurring

	Factor Value	DS1 Cost	DS3 Cost
Expense		$ 346.68	$ 1,311.51
Directly Assigned			
Product Management Expense	0.025565	$ 8.86	$ 33.53
Sales Expense	0.009225	$ 3.20	$ 12.10
Product Advertising Expense	0.000000	$ -	$ -
Business Fees (Other Operating Taxes)	0.002025	$ 0.73	$ 2.75
Directly Assigned Costs		$ 12.79	$ 48.38
Total Direct Monthly Costs		$ 359.46	$ 1,359.89
Directly Attributed			
Network Operations	0.040880	$ 14.69	$ 55.59
Network Support Assets	0.015364	$ 5.52	$ 20.89
General Support Assets	0.069508	$ 24.99	$ 94.52
General Purpose Computers	0.034714	$ 12.48	$ 47.21
Uncollectible	0.000401	$ 0.14	$ 0.55
Accounting & Finance Expense	0.008839	$ 3.18	$ 12.02
Human Resources Expense	0.008145	$ 2.93	$ 11.08
Information Management Expense	0.057009	$ 20.49	$ 77.53
Intangibles	0.002091	$ 0.75	$ 2.84
State Prescribed Directly Attributed	0.000000	$ -	$ -
Directly Attributed Costs		$ 85.18	$ 322.23
TELRIC		$ 444.64	$ 1,682.11
Common			
Executive Expense	0.007805	$ 3.47	$ 13.13
Planning Expense	0.000580	$ 0.26	$ 0.98
External Relations Expense	0.013029	$ 5.79	$ 21.92
Legal Expense	0.006148	$ 2.73	$ 10.34
Other Procurement Expense	0.002359	$ 1.05	$ 3.97
Research & Development Expense	0.000036	$ 0.02	$ 0.06
Other General and Admin Expense	0.015212	$ 6.76	$ 25.59
State Prescribed Common	0.000000	$ -	$ -
Common Costs		$ 20.08	$ 75.98
TELRIC + Common Costs		$ 464.72	$ 1,758.09

WCP Recurring

	Factor Value	DS1 Chan Regen Cost	DS3 Chan Regen Cost
Investment		$ 42.92	$ 109.30
Investment Loadings			
Power	0.069700	$ 2.99	$ 7.62
Sales Tax	0.056400	$ 2.59	$ 6.59
Interest During Construction	0.006100	$ 2.74	$ 6.99
Loaded Investment		$ 51.25	$ 130.50
COE Land And Building Investment			
Building	0.053600	$ 2.75	$ 6.99
Land	0.001400	$ 0.07	$ 0.18
Investment With COE Land And Bldg		$ 54.07	$ 137.68
Investment Based Monthly Direct Costs			
Depreciation	0.109717	$ 0.47	$ 1.19
Cost Of Money	0.045455	$ 0.19	$ 0.49
Income Tax Expense	0.017189	$ 0.07	$ 0.19
Maintenance	0.032498	$ 0.14	$ 0.35
Ad Valorem Tax	0.008613	$ 0.04	$ 0.09
Investment Based Monthly Direct Costs		$ 0.91	$ 2.32
COE Land And Building Cost			
COE Building	0.159969	$ 0.04	$ 0.09
COE Land	0.163967	$ 0.00	$ 0.00
COE Land And Building Monthly Costs		$ 0.04	$ 0.10
Total Investment Based Monthly Costs		$ 0.95	$ 2.42
Directly Assigned			
Product Management Expense	0.025565	$ 0.02	$ 0.06
Sales Expense	0.009225	$ 0.01	$ 0.02
Product Advertising Expense	0.000000	$ -	$ -
Business Fees (Other Operating Taxes)	0.002025	$ 0.00	$ 0.00
Directly Assigned Monthly Costs		$ 0.03	$ 0.09
Total Direct Monthly Costs		$ 0.98	$ 2.51
Directly Attributed			
Network Operations	0.040880	$ 0.04	$ 0.10
Network Support Assets	0.015364	$ 0.02	$ 0.04
General Support Assets	0.069508	$ 0.07	$ 0.17
General Purpose Computers	0.034714	$ 0.03	$ 0.09
Uncollectible	0.000401	$ 0.00	$ 0.00
Accounting & Finance Expense	0.008839	$ 0.01	$ 0.02
Human Resources Expense	0.008145	$ 0.01	$ 0.02
Information Management Expense	0.057009	$ 0.06	$ 0.14

Channel Regeneration

Intangibles	0.002091	$ 0.00	$ 0.01
State Prescribed Directly Attributed	0.000000	$ -	$ -
Total Directly Attributed Monthly Costs		$ 0.23	$ 0.59
TELRIC		$ 1.22	$ 3.10
Common			
Executive Expense	0.007805	$ 0.0095	$ 0.0242
Planning Expense	0.000580	$ 0.0007	$ 0.0018
External Relations Expense	0.013029	$ 0.0159	$ 0.0404
Legal Expense	0.006148	$ 0.0075	$ 0.0191
Other Procurement Expense	0.002359	$ 0.0029	$ 0.0073
Research & Development Expense	0.000036	$ 0.0000	$ 0.0001
Other General and Admin Expense	0.015212	$ 0.0185	$ 0.0472
State Prescribed Common	0.000000	$ -	$ -
Common Costs		$ 0.05	$ 0.14
TELRIC + Common Costs		$ 1.27	$ 3.24

Channel Regeneration

WCP Maintenance

	Factor Value	DS1 Cost	DS3 Cost
Investment		$ 346.68	$ 1,311.51
Investment Based Monthly Direct Costs			
Maintenance	0.029242	$ 0.84	$ 3.20
Investment Based Monthly Direct Costs		$ 0.84	$ 3.20
Directly Assigned			
Product Management Expense	0.025565	$ 0.02	$ 0.08
Sales Expense	0.009225	$ 0.01	$ 0.03
Product Advertising Expense	0.000000	$ -	$ -
Business Fees (Other Operating Taxes)	0.002025	$ 0.00	$ 0.01
Directly Assigned Monthly Costs		$ 0.03	$ 0.12
Total Direct Monthly Costs		$ 0.88	$ 3.31
Directly Attributed			
Network Operations	0.040880	$ 0.04	$ 0.14
Network Support Assets	0.015364	$ 0.01	$ 0.05
General Support Assets	0.069508	$ 0.06	$ 0.23
General Purpose Computers	0.034714	$ 0.03	$ 0.12
Uncollectible	0.000401	$ 0.00	$ 0.00
Accounting & Finance Expense	0.008839	$ 0.01	$ 0.03
Human Resources Expense	0.008145	$ 0.01	$ 0.03
Information Management Expense	0.057009	$ 0.05	$ 0.19
Intangibles	0.002091	$ 0.00	$ 0.01
State Prescribed Directly Attributed	0.000000	$ -	$ -
Total Directly Attributed Monthly Costs		$ 0.21	$ 0.79
TELRIC		$ 1.08	$ 4.10
Common			
Executive Expense	0.007805	$ 0.0085	$ 0.0320
Planning Expense	0.000580	$ 0.0006	$ 0.0024
External Relations Expense	0.013029	$ 0.0141	$ 0.0534
Legal Expense	0.006148	$ 0.0067	$ 0.0252
Other Procurement Expense	0.002359	$ 0.0026	$ 0.0097
Research & Development Expense	0.000036	$ 0.0000	$ 0.0001
Other General and Admin Expense	0.015212	$ 0.0165	$ 0.0624
State Prescribed Common	0.000000	$ -	$ -
Common Costs		$ 0.05	$ 0.19
TELRIC + Common Costs		$ 1.13	$ 4.28

Remote Collocation

Regeneration Costs

1	2	3	4	5	6
Configuration Package ID	**Title**	**Unit of Measure**	**FRC**	**Suffix**	**Ntwk Cost per Unit**
C-INTRCT-FNSHSVC-DS1RPTRBAY7	7' DS1 Repeater Bay Finished Services (5-5-5)	Each	357	C	
C-INTRCT-FNSHSVC-DS1CHASSIS	DS1 Unloaded Repeater Chassis 28 Positions	Each	257	C	
C-INTRCT-FNSHSVC-DS1MODULE	DS1 Module for Finished Service Repeater	Each	257	C	
C-INTRCT-FNSHSVC-DS3RPTRBAY7	7' DS3 Repeater Bay Finished Services (5-5-5)	Each	257	C	
C-INTRCT-FNSHSVC-DS3CHASSIS	DS3 Unloaded Repeater Chassis 28 Positions	Each	257	C	
C-INTRCT-FNSHSVC-DS3MODULE	DS3 Module for Finished Service	Each	257	C	

Remote Collocation

Regeneration Costs

1	7	8	9	10	11	12	13	14	15	16
	Material Costs						Qwest Labor Costs			
Configuration Package ID	Supplier Contract	BRI Load	Sales Tax	Shipping	Total Mat. Cost	Softwr RTU	Line $ 48.55	Splice $ 44.50	Install $ 42.03	Engrg $ 53.00
C-INTRCT-FNSHSVC-DS1RPTRBAY7	$ 4,112.00	$ 2.06	$ 246.72	$ 250.00	$ 4,610.78	$ -	1.0000	1.0000	1.0000	8.0000
C-INTRCT-FNSHSVC-DS1CHASSIS	$ 227.50	$ 0.11	$ 13.85	$ 20.00	$ 261.46	$ -	0.0000	0.0000	0.0000	2.0000
C-INTRCT-FNSHSVC-DS1MODULE	$ 215.14	$ 0.11	$ 12.91	$ 5.00	$ 233.16	$ -	0.0000	0.0000	0.0000	2.0000
C-INTRCT-FNSHSVC-DS3RPTRBAY7	$ 5,683.92	$ 2.84	$ 341.04	$ -	$ 6,027.80	$ -	1.0000	1.0000	1.0000	8.0000
C-INTRCT-FNSHSVC-DS3CHASSIS	$ 388.00	$ 0.19	$ 23.28	$ 20.00	$ 431.47	$ -	0.0000	0.0000	2.0000	2.0000
C-INTRCT-FNSHSVC-DS3MODULE	$ 1,120.00	$ 0.56	$ 67.20	$ 5.00	$ 1,192.76	$ -	0.0000	0.0000	0.0000	2.0000

Remote Collocation

Regeneration Costs

1	17	18	19	20	
		Contract Labor Costs			
Configuration Package ID	T&T	Install	Engineer	Exempt Material	Total
	$ 42.03			$ 11.64	
C-INTRCT-FNSHSVC-DS1RPTRBAY7	1.0000	$ -	$ -	0.0000	$ 5,211.8860
C-INTRCT-FNSHSVC-DS1CHASSIS	0.0000	$ -	$ -	0.0000	$ 367.4638
C-INTRCT-FNSHSVC-DS1MODULE	0.0000	$ -	$ -	0.0000	$ 339.1560
C-INTRCT-FNSHSVC-DS3RPTRBAY7	1.0000	$ -	$ -	0.0000	$ 6,628.9072
C-INTRCT-FNSHSVC-DS3CHASSIS	0.0000	$ -	$ -	0.0000	$ 621.5340
C-INTRCT-FNSHSVC-DS3MODULE	0.0000	$ -	$ -	0.0000	$ 1,298.7600

South Dakota Public Utilities Commission
Docket No. TC 01_____
Qwest Corporation

Attachment 10

Pole Attachment

2000 SOUTH DAKOTA
POLE ATTACHMENT FORMULA
CALCULATIONS USING FCC METHODOLOGY

1. NET POLE INVESTMENT (POLE VALUE)	
A. Gross Pole Investment (Account 2411 Poles FRC 1C & 1PC)	$2,322,723
B. Depreciation Reserve (Account 3124.11 - FRC 1X & 1PX)	$3,863,559
C. Net Salvage Factor (U S WEST Capital Recovery Parameter Report)	100%
D. Pole Investment Deprection Reserve Only - 1D=1B/(1+1C)	$1,931,780
E. Accumulated Deferred Income Taxes - (Account 4340) Poles	($1,517,838)
F. Net Pole Investment 1F=1A-1D-1E	$1,908,781
2. DEPRECIATION EXPENSE	
A. Depreciation rate for Poles (Calculated from the U S WEST Capital Cost Program)	0.1244
B. Gross Pole Investment (L.1A)	$2,322,723
C. Net Pole Investment - (L.1F)	$1,908,781
D. Depreciation Expense 2D=(2B/2C)*2A	0.1514
3. ADMINISTRATION EXPENSE	
A. Total Administration & General Expense (6710 & 6720)	$20,906,745
B. Gross Plant Investment (Company Report MR2A L. 35)	$637,535,952
C. Plt. Dep. Res - Account 3100	$382,090,367
D. Accumulated Deferred Income Taxes - (Account 4100+4340)	$35,105,421
E. Administration Expense 3E=3A/(3B-3C-3D)	0.0949
4. MAINTENANCE EXPENSE	
A. Account 6411 1M - Rental Expense Poles	$31,229
B. Net Pole Investment (L.1F)	$1,908,781
C. Maintenance Expense 4C=4A/4B	0.0164
5. NORMALIZED TAX	
A. Account 7210	($492,755)
B. Account 7220	$22,973,152
C. Account 7230	$0
D. Account 7240	$7,074,617
E. Account 7250	($2,383,897)
F. Total 5F=SUM(5A:5E)	$27,171,118
G. Gross Plant Investment (L.3B)	$637,535,952
H. Plt. Dep. Res - Account 3100	$382,090,367
I. Accumulated Deferred Income Taxes - (Account 4100+4340)	35,105,421.00
J. Normalized Tax 5J=5F/(5G-5H-5I)	0.1233
6. COST OF CAPITAL	
A. Authorized Rate of Return	0.1014
7. TOTAL CARRYING CHARGE 7=2D+3E+4C+5J+6A	0.4873

2000 SOUTH DAKOTA

POLE ATTACHMENT FORMULA
CALCULATIONS USING FCC METHODOLOGY

MAXIMUM RATE PER POLE =
**SPACE OCCUPIED/USUABLE SPACE *
NET POLE INVESTMENT/TOTAL POLES * 0.95 * CARRYING CHARGES**

Average Pole Height	37.5
Total Usable Space	13.5
Space Occupied	1
Total Number of Poles	16,012

Maximum Rate Per Pole	
Space Occupied/Usable Space	0.0741
Net Pole Investment/Total Poles	119.21
* .095 * Carrying Charge	4.09
Yearly Rate Per Pole	$4.09

Data Sources:
All data is from the U S WEST Corporate Books as of 12/31/99
1. GROSS INVESTMENTS - Account 2001 (Telecommunications Plant in Service)
2. NET POLE INVESTMENT - (POLE VALUE) - MR2 Report
3. FUTURE NET SALVAGE - from the state parameter report, provided by the Capital Recovery group
4. DEPRECTION RATE for POLES - A calculated percentage in the Capital Cost Program based on state pole lives and net salvage from the U S WEST Capital Recovery state parameter report
5. DEPRECIATION EXPENSE - MR5 Report
6. ADMINISTRATION EXPENSE - MR5 Report
7. MAINTENANCE EXPENSE - MR5 Report
8. NORMALIZED TAX - MR 5 Report
9. COST OF CAPITAL - Individual state-authorized Rate of Return

Assumptions:
Accumulated Depreciation:
(Refer to paragraph 67 of CS 97-98 - negative pole investment as a result of accumulated depreciation.)
1. The accumulated depreciation reserve dollars in Line 1B were divided by (1+the future net salvage for poles Line 1C). This was done to remove the accumulated depreciation associated with the cost of the pole removal.
2. The dollars remaining (Line 1D) were then used in the calculation of Line 1F Net Pole Investment.

Accumulated Deferred Income Taxes:
Line 1E asks for the sum of Account 4100 and Account 4340

This is intended to be pole line account specific. USW does not include Pole Lines in account 4100 therefore only account 4340 specific to poles was used in this calculation.

South Dakota Public Utilities Commission
Docket No. TC 01_____
Qwest Corporation

Attachment 11

Conduit Attachment

2000 SOUTH DAKOTA

CONDUIT ATTACHMENT FORMULA
CALCULATIONS USING FCC METHODOLOGY

1. NET CONDUIT INVESTMENT	
A. Gross Conduit Investment (Account 2441 Conduit - FRC 4C & 4PC)	$26,283,559
B. Depreciation Reserve (Account 3124.41 - FRC 4X)	$8,772,060
C. Accumulated Deferred Income Taxes - (Account 4340) Conduit	$3,609,867
D. Net Conduit Investment 1F=1A-1B-1C	$13,901,631
2. DEPRECIATION EXPENSE	
A. Depreciation rate for Conduit (Calculated from the U S WEST Capital Cost Program)	0.0215
B. Gross Conduit Investment (L.1A)	$26,283,559
C. Net Conduit Investment - (L.1D)	$13,901,631
D. Depreciation Expense 2D=(2B/2C)*2A	0.0406
3. ADMINISTRATION EXPENSE	
A. Total Administration & General Expense (Accounts 6710 & 6720)	$20,906,745
B. Gross Plant Investment (Company Report MR2A L. 35)	$637,535,952
C. Plt. Dep. Res - (Account 3100)	$382,090,367
D. Accumulated Deferred Income Taxes - (Account 4100+4340)	$35,105,421
E. Administration Expense 3E=3A/(3B-3C-3D)	0.0949
4. MAINTENANCE EXPENSE	
A. Account 6441 4M	$157,090
B. Net Conduit Investment (L.1D)	$13,901,631
C. Maintenance Expense 4C=4A/4B	0.0113
5. NORMALIZED TAX	
A. Account 7210	($492,755)
B. Account 7220	$22,973,152
C. Account 7230	$0
D. Account 7240	$7,074,617
E. Account 7250	($2,383,897)
F. Total 5F=SUM(5A:5E)	$27,171,118
G. Gross Plant Investment (L.3B)	$637,535,952
H. Plt. Dep. Res - (Account 3100)	$382,090,367
I. Accumulated Deferred Income Taxes - (Account 4100+4340)	$35,105,421
J. Normalized Tax 5J=5F/(5G-5H-5I)	0.1233
6. COST OF CAPITAL	
A. Authorized Rate of Return	0.1014
7. TOTAL CARRYING CHARGE 7=2D+3E+4C+5J+6A	0.3715

2000 SOUTH DAKOTA

CONDUIT ATTACHMENT FORMULA
CALCULATIONS USING FCC METHODOLOGY

MAXIMUM RATE
PERCENTAGE OF CONDUIT CAPACITY OCCUPIED * NET LINEAR COST OF CONDUIT * CARRYING CHARGES

Conduit Miles of duct/Conduit Trench Miles (7A Report)	4.48
Percentage of Conduit Capacity Occupied	0.1116
Net Linear Cost of Conduit	$6.75
Carrying Charges	0.3715
Maximum Rate	$0.28

Data Sources:
All data is from the U S WEST Corporate Books as of 12/31/99
1. GROSS INVESTMENTS - Account 2001 (Telecommunications Plant in Service)
2. NET POLE INVESTMENT - (POLE VALUE) - MR2 Report
3. DEPRECIATION EXPENSE - Calculated from the U S West Capital Cost Program
4. ADMINISTRATION EXPENSE - MR5 Report
5. MAINTENANCE EXPENSE - MR5 Report
6. NORMALIZED TAX - MR 5 Report
7. COST OF CAPITAL - Individual state-authorized Rate of Return

Assumptions:
Accumulated Deferred Income Taxes:
Line 1E asks for the sum of Account 4100 and Account 4340
This is intended to be conduit account specific. USW does not include conduit in account 4100 therefore only account 4340 specific to conduit was used in this calculation.
therefore only account 4340 specific to conduit was used in this calculation.

South Dakota Public Utilities Commission
Docket No. TC 01_____
Qwest Corporation

Attachment 12

Study No. 5359
Daily Usage Record

EXECUTIVE SUMMARY
CRIS CUSTOMER BILLING AND COLLECTION
2001 RECURRING COST STUDY
DAILY USAGE RECORD FILE

SOUTH DAKOTA

JUNE 2001

Study ID 5359

READ ME FILE

DAILY USAGE RECORD FILE

SOUTH DAKOTA SGAT, JUNE 2001

STUDY # 5359

Models Used In This Study

Wholesale Cost Program – Version 2.07
Cost Factors Model (TELRIC) – 00V2
SUM – V8.00

Files and/of Workbooks In This Study

dailyusagerecordfile, June.DOC = Document that includes the title page, read me file, table of contents, and executive summary.

dailyusagerecordfile, June.XLS = Workbook that contains the calculation of the unit cost and input source data. [Tabs: Study Summary, WINPC3 Output (cost results), Total Product Costs, Investment Cost Calc, WINPC3 Investments, WINPC3 ACF Inputs, WINPC3 ACF Outputs, Dvlp Calc, Toll Data Entry, EO Measurement]

To Generate The Cost Results Found In This Study

Values from the **"Dvlp Calc", "Toll Data Entry", "EO Measurement" tabs** within dailyusagerecordfile, June.XLS must be input into the **"WINPC3 Investments" tab** of dailyusagerecordfile, June.XLS.

These inputs flow through to produce the costs found on the **"WINPC3 Output" tab**. (Note: State name must remain the same otherwise the Wholesale Cost Program must be rerun.

TABLE OF CONTENTS

		PAGE
SECTION A – STUDY OUTPUT		
	EXECUTIVE SUMMARY	1
	STUDY SUMMARY	3
	COST SUMMARY – WINPC3 OUTPUT	4
	TOTAL PRODUCT COSTS	5
	INVESTMENT COST CALCULATIONS	6
SECTION B – COST CALCULATIONS		
	WINPC3 INVESTMENTS	7
	WINPC3 PARAMETERS	8
	WINPC3 ACF INPUTS	9
	WINPC3 ACF OUTPUTS	10
SECTION C – SOURCE DATA		
	DVLP CALC	13
	TOLL DATA ENTRY	14
	EO MEASUREMENT	15

A. PURPOSE, SCOPE, AND APPLICATION

The purpose of this study is to identify the 2001 Daily Usage Record File cost per record. The cost estimates developed herein are appropriate to QWEST operations.

B. DESCRIPTION OF ELEMENTS AND SERVICES

The Daily Usage Record File provides the accumulated set of call information for a given day as captured or recorded by the network switches. This information is a file of unrated QWEST originated usage messages and rated co-provider originated usage messages. The Daily Usage Record File contains multi-state data for the Data Processing Center generating this information.

C. STUDY METHODOLOGY

The methodology used in this study is to identify the development costs, toll data entry costs, and the end office measurement costs associated with Daily Usage Record Files.

Appropriate cost factors were then applied to develop the total cost per unit.

D. DESCRIPTION OF TOTAL ELEMENT LONG RUN INCREMENTAL COSTS

The QWEST cost study format disaggregates the cost results, on a unitized basis, into the following components:

Total Direct Costs are the forward-looking costs that are caused by offering the network element in the long run. These costs would not be incurred if the network elements were not offered. Total Direct Costs reflect the per-unit forward looking cost associated with providing the entire network element in the most efficient manner, holding constant the production of all other network elements produced by the firm. For recurring element costs Total Direct Costs include the capital costs (e.g., depreciation, return, taxes) and maintenance costs associated with the investment required to provision a network element, along with other network element-specific costs such as product management expense. For nonrecurring costs, Total Direct Costs include the labor-related expenses associated with the provision of a network element, along with other network element-specific costs such as product management expense.

Directly Attributable Costs include network administration and engineering costs and various administrative costs such as the cost of general-purpose computers and accounting and finance expenses. These costs are not directly associated with a specific network element. However, these costs vary with the provision of all network elements, and are not common to the entire firm.

Total Element Long Run Incremental Costs (TELRIC) represent the sum of Total Direct Costs and Directly Attributable Costs. This measure of costs includes the forward looking costs incurred in the provision of a network element. This measure of costs is consistent with TELRIC as defined by the FCC.

Common Costs are associated with the enterprise as a whole. These costs do vary based on the total size of the firm, but do not vary with the provisioning of individual network elements. These costs are avoidable only with the elimination of the entire firm, and are sometimes referred to as *general overhead costs.*

Fully Allocated Costs represent the sum of Total Element Long Run Incremental Cost plus Common Costs (TELRIC + CC).

E. STUDY ASSUMPTIONS

1. In this cost study, QWEST has not used the economic depreciation lives (and/or cost of money) that it advocates. QWEST does not advocate the depreciation lives (and/or cost of money) used in this study, nor does it believe that they are appropriate inputs for its cost studies beyond the scope of this application.

F. Study Summary		
Study Name	*2001 DAILY USAGE RECORD FILE*	
Study Requester		
Type of Study	*TELRIC*	
Study ID	*5359*	
Cost Factor Group	*Interconnection*	
Study Applications		
Completion Date	*June 26, 2001*	
Cost Analyst	*D. L. Taylor*	
Study Review	**Reviewer**	**Date**
		June 26, 2001
Models Used	**Model**	**Version**
	Wholesale Cost Program	*2.07*
	Cost Factor Databases	*00SD02E*
	Cost Factors Model (TELRIC)	*00V2*
Cost Factors Used	**Factor**	**Effective Date**
	Capital Recovery	*01/01*
	Maintenance	*01/01*
	Ad Valorem	*01/01*
	COE Land & Bldg	*01/01*
	Directly Assigned Factors	*01/01*
	Directly Attributable Factors	*01/01*
	Common	*01/01*
	Cost Of Money	*10.14%*
Inflation		
Major Cost Drivers		

Parameter File: H:\SLHILL-Team\B&C\STUDIES\Daily Usage\SD SGAT, June 2001\dailyusagerecordfile, June.xls, Sheet "WINPC3 Parameters"
State(s): SD
Database Vintage: 00SD02E
Factors For: Interconnection
Report Type: ICM Format
Decimal Places: 6
Costs Format: Annual
Group Totals: Yes
ACF Input: H:\SLHILL-Team\B&C\STUDIES\Daily Usage\SD SGAT, June 2001\dailyusagerecordfile, June.xls, Sheet "WINPC3 ACF Inputs"
ACF Output: H:\SLHILL-Team\B&C\STUDIES\Daily Usage\SD SGAT, June 2001\dailyusagerecordfile, June.xls, Sheet "WINPC3 ACF Outputs"
Investment: H:\SLHILL-Team\B&C\STUDIES\Daily Usage\SD SGAT, June 2001\dailyusagerecordfile, June.xls, Sheet "WINPC3 Investments"
Output: H:\SLHILL-Team\B&C\STUDIES\Daily Usage\SD SGAT, June 2001\dailyusagerecordfile, June.xls, Sheet "WINPC3 Output"

State: South Dakota

Description	USOC	Loaded Investment	Direct Expense	Total Direct	Network Support	Directly Attributed	TELRIC	Common	TELRIC + Common
Daily Usage Record File per Record		$0.000092	$0.000503	$0.000541	$0.000030	$0.000128	$0.000669	$0.000030	$0.000699

Row	6/26/01 10:18 AM South Dakota	Source or Calculation	Factor Value	Daily Usage Record File per Record
			A	B
1	**Investment**	sl r"Total" cD		0.000092
2				
3	***Investment Based Costs***	***sl r"Total" cK***		0.000018
4				
5	Direct Expenses			0.000503
6	Miscellaneous Expenses			0.000000
7	Billing & Collection - PL			0.000000
8	***Investment Based + Direct Costs***			0.000521
9				
10	***Directly Assigned***			
11	Product Management Expense	cA*(r8-r6)	0.025565	0.000013
12	Sales Expense	cA*(r8-r6)	0.009225	0.000005
13	Product Advertising Expense	cA*(r8-r6)	0.000000	0.000000
14	Business Fees (Other Operating Taxes)	cA*(Sum(r8:r13)-	0.002025	0.000001
15	***Directly Assigned Costs***	***Sum r11:r14***		0.000019
16				
17	***Total Direct Costs***	***r8 + r15***		0.000541
18				
19	***Directly Attributed***			
20	Network Operations	cA*(r17-r6)	0.040880	0.000022
21	Network Support Assets	cA*(r17-r6)	0.015364	0.000008
22	General Support Assets	cA*(r17-r6)	0.069508	0.000038
23	General Purpose Computers	cA*(r17-r6)	0.034714	0.000019
24	Uncollectible	cA*(r17-r6)	0.000401	0.000000
25	Accounting & Finance Expense	cA*(r17-r6)	0.008839	0.000005
26	Human Resources Expense	cA*(r17-r6)	0.008145	0.000004
27	Information Management Expense	cA*(r17-r6)	0.057009	0.000031
28	Intangibles	cA*(r17-r6)	0.002091	0.000001
29	***Directly Attributed Costs***	***Sum r20:r28***		0.000128
30				
31	***TELRIC***	***r17 + r29***		0.000669
32				
33	***Common***			
34	Executive Expense	cA*(r31-r6)	0.007805	0.000005
35	Planning Expense	cA*(r31-r6)	0.000580	0.000000
36	External Relations Expense	cA*(r31-r6)	0.013029	0.000009
37	Legal Expense	cA*(r31-r6)	0.006148	0.000004
38	Other Procurement Expense	cA*(r31-r6)	0.002359	0.000002
39	Research & Development Expense	cA*(r31-r6)	0.000036	0.000000
40	Other General and Admin Expense	cA*(r31-r6)	0.015212	0.000010
41	***Common Costs***	***Sum r34:r40***		0.000030
42				
43	***TELRIC + Common Costs***	***r31 + r41***		0.000699

6/26/01
South Dakota

2001 DAILY USAGE RECORD FILE

Daily Usage Record File per Record

Acct	FRC	Account Name	Investment	Depreciation	Cost Of Money	Income Tax	Ad Valorem	Maintenance	Switch RTU	Total Capital Costs
2124	2124	General Purpose Computers	0.000002	0.000000	0.000000	0.000000	0.000000	0.000000	0.000000	0.000000
2212	377C	Digital Switch	0.000085	0.000009	0.000004	0.000001	0.000001	0.000002	0.000000	0.000017
2111	20C	Land	0.000000	0.000000	0.000000	0.000000	0.000000	0.000000		0.000000
2121	110C	Building	0.000005	0.000000	0.000000	0.000000	0.000000	0.000000		0.000001
		Total	**0.000092**	**0.000010**	**0.000004**	**0.000002**	**0.000001**	**0.000002**	**0.000000**	**0.000018**

	A	B	C	D	E	F	G
1	Investment						
2	STUDY	2001 DAILY USAGE RECORD FILE					
3	DATE	##					
4	GROUP	Daily Usage Record File per Record					
5	COMMON	SD	0.000499				Development
6	LOADED	SD	0.000002			2124	Toll Data Entry (Assembly and Editing) Investment
7	COMMON	SD	0.000004				Toll Data Entry (Assembly and Editing) Expense
8	LOADED	SD	0.000085			377C	End Office Measurement per Call Set-Up

	A	B
1	Parameter	
2	SD	
3	7	
4	6	
5	Annual	1
6	Yes	
7	No	
8		
9	11	
10	5359	

	A	B	C	D	E	F	G	H	I	J	K	L	M	N	O	P	Q	R	S	T	U	V	W	X	Y	Z	AA	AB
1	ACFIN																											
2	00SD02E																											
3	2124	DEPR-AVG	COM-AVG	IT-AVG	MTNC-TOT	ADVAL	BLDG	LAND	PRODMAN	SALESEXP	ADVER	BF	NTWKOP	NTWKST	GENLST	COMPTR	UNCOLL	ACCNT	HREXP	INTAN	EXEC	PLAN	EXTERN	INFOR	LEGAL	PROCR	RDEXP	GENL
4	377C	DEPR-AVG	COM-AVG	IT-AVG	MTNC-TOT	ADVAL	BLDG	LAND	PRODMAN	SALESEXP	ADVER	BF	NTWKOP	NTWKST	GENLST	COMPTR	UNCOLL	ACCNT	HREXP	INTAN	EXEC	PLAN	EXTERN	INFOR	LEGAL	PROCR	RDEXP	GENL
5	20C	DEPR-AVG	COM-AVG	IT-AVG	MTNC-TOT	ADVAL	BLDG	LAND	PRODMAN	SALESEXP	ADVER	BF	NTWKOP	NTWKST	GENLST	COMPTR	UNCOLL	ACCNT	HREXP	INTAN	EXEC	PLAN	EXTERN	INFOR	LEGAL	PROCR	RDEXP	GENL
6	110C	DEPR-AVG	COM-AVG	IT-AVG	MTNC-TOT	ADVAL	BLDG	LAND	PRODMAN	SALESEXP	ADVER	BF	NTWKOP	NTWKST	GENLST	COMPTR	UNCOLL	ACCNT	HREXP	INTAN	EXEC	PLAN	EXTERN	INFOR	LEGAL	PROCR	RDEXP	GENL

	A	B	C	D	E	F	G	H	I	J	K	L	M
1	ACFOUT	Factors For: Interconnection											
2	*-Run Done With Database Vintage: 00SD02E, Dated: 02/15/01*												
3	*-Wholesale Cost Program (TELRIC) Data Base released 02/01 (00SD02E).*												
4	*-Factors loaded from Factors Model (Expense Module), Version 00V2.*												
5	*-CAPITAL RECOVERY factors released 01/01 and based on 10.14% Cost*												
6	*Of Money. No 1-10 year factors developed.*												
7	*-MAINTENANCE factors released 01/01.*												
8	*-RTU factors released 02/01.*												
9	*-AD VALOREM Tax released 01/01.*												
10	*-DIRECTLY ASSIGNED expense factors released 01/01.*												
11	*-BUSINESS FEES released 01/01.*												
12	*-COMMON Expense released 01/01.*												
13	*-TOTAL INSTALLED FACTORS (TIF) released 01/01.*												
14	*-POWER investment factors released 01/01.*												
15	*-SALES TAX released 01/01.*												
16	*-TELCO Engineering factors released 01/01.*												
17	*-INTEREST DURING CONSTRUCTION released 01/01.*												
18	*-LAND AND BUILDING factors released 01/01.*												
19	*-DIRECTLY ATTRIBUTABLE expense factors released 01/01.*												
20	*-SALES EXPENSE factor released 01/01.*												
21	*-PRODUCT MANAGEMENT factor released 01/01.*												
22	*-BILLING & COLLECTION factor released 01/01.*												
23	*-PROVISIONING factors released 01/01.*												
24	*-TELEPHONE PLANT INDEX released 01/01.*												
25	*-STRUCTURE RATIO released 01/01.*												
26													
27													
28													
29													
30													
31													
32	*State:*												
33													

	A	B	C	D	E	F	G	H	I	J	K	L	M	N	O	P	Q	R
34	***ACCOUNTS***																	
35	***2124***																	
36																		
37																		
38	State:	South Dakota																
39																		
40	**ACCOUNT**	**DEPR-AVG**	**COM-AVG**	**IT-AVG**	**MTNC-TOT**	**ADVAL**	**BLDG**	**LAND**	**PRODMAN**	**SALESEXP**	**ADVER**	**BF**	**NTWKOP**	**NTWKST**	**GENLST**	**COMPTR**	**UNCOLL**	**ACCNT**
41	2124	0.164850	0.047620	0.018008	0.000000	0.008613	0.000000	0.000000	0.025565	0.009225	0.000000	0.002025	0.040880	0.015364	0.069508	0.034714	0.000401	0.008839
42	377C	0.108910	0.045445	0.017186	0.020939	0.008613	0.053700	0.001400	0.025565	0.009225	0.000000	0.002025	0.040880	0.015364	0.069508	0.034714	0.000401	0.008839
43	20C	0.000000	0.096506	0.036495	0.022353	0.008613	0.000000	0.000000	0.025565	0.009225	0.000000	0.002025	0.040880	0.015364	0.069508	0.034714	0.000401	0.008839
44	110C	0.025821	0.074869	0.028313	0.022353	0.008613	0.000000	0.000000	0.025565	0.009225	0.000000	0.002025	0.040880	0.015364	0.069508	0.034714	0.000401	0.008839

	S	T	U	V	W	X	Y	Z	AA	AB
34										
35										
36										
37										
38										
39										
40	**HREXP**	**INTAN**	**EXEC**	**PLAN**	**EXTERN**	**INFOR**	**LEGAL**	**PROCR**	**RDEXP**	**GENL**
41	0.008145	0.002091	0.007805	0.000580	0.013029	0.057009	0.006148	0.002359	0.000036	0.015212
42	0.008145	0.002091	0.007805	0.000580	0.013029	0.057009	0.006148	0.002359	0.000036	0.015212
43	0.008145	0.002091	0.007805	0.000580	0.013029	0.057009	0.006148	0.002359	0.000036	0.015212
44	0.008145	0.002091	0.007805	0.000580	0.013029	0.057009	0.006148	0.002359	0.000036	0.015212

	A	B	C	D	E	F	G	H
1								
2	**Resellers Competitive Line Loss Forecast**							
3	**State**	**1999**	**2000**	**2001**	**2002**	**2003**		
4	Total Lines - USWC*	613,939	829,674	1,049,721	1,274,362	1,503,946		
5	Msg/Line(Acct)/Mo.*	15	15	15	15	15		
6	Total Msg/Mo.	9,209,085	12,445,110	15,745,815	19,115,430	22,559,190		
7		12	12	12	12	12		
8	Total Ann. Msgs	110,509,020	149,341,320	188,949,780	229,385,160	270,710,280		
9								
10	**Composite Cost Of Capital - SD**		**10.14%**					
11	**Pretax Discount Rate - SD**		**13.98%**					
12								
13								
14	**Annual Message Volume Development**							
15		5 Year	2 Year					
16		Forecast	Forecast					
17	**NPV**	687,766,437	223,444,057					
18	**A/P**	182,080,402	128,988,272					
19								
20	**MCR Recurring Cost Development**							
21	2000 Hourly Labor Rate*		$ 60.49					
22	Total MCR Hours		1,753					
23	Total MCR Nonrecurring Cost		$106,039					
24								
25	**Annual MCR Recurring Payments**							
26		5 Year	2 Year					
27	**A/P**	$30,873	$64,380					
28								
29	**Per Message Cost Development**							
30		5 Year	2 Year					
31		B27/B18	C27/C18					
32	**Cost Per Message**	$0.000170	***$0.000499***					
33								
34								
35								
36								
37								
38								
39	* NOTE:							
40	New USWC Volumes (1999-2003) to Carole McCurley from Chuck Ploughman.							
41	Msg/Line(Acct)/Mo. taken from the 2000 3rd Party Billing Study dated June 2000.							
42	2000 Hourly Labor Rate - 6724.1 Acct./Subacct.							
43								
44								
45								
46								
47								
48								
49								

	A	B	C	D	E	F	G	H	I	J
1										
2										
3										
4	**CRIS CDP summary**					Volume	Service	Shared		
5	**2000 Study year**					Sensitive	Specific	Residual		*Page, row,*
6						Processing	Fixed			*& column*
7					*Reference*					
8					Tab 22	**INV**		**EXP**		
9	**Toll data entry**			seconds per message	0.000099	***$0.000002***		***$0.000004***		
10	Toll data entry			CDP - per message		$0.000000		$0.000000		*E53 * row 18 or 19*
11										
12	Toll message rating			seconds per message	0.000155	$0.000003		$0.000006		
13	Toll message rating			CDP - per message		$0.000000		$0.000000		*E56 * row 18 or 19*
14										
15	Toll masterfile processing			seconds per message	0.000156	$0.000003		$0.000006		
16	Toll masterfile processing			CDP - per message		$0.000000		$0.000000		*E59 * row 18 or 19*
17										
18	Account processing			seconds per account	0.000598	$0.000011		$0.000023		
19	Account processing			CDP - per account		$0.000000		$0.000000		*E62 * row 18 or 19*
20										
21	Customer billing - per account			seconds per account	0.004188	$0.000077		$0.000160		
22	Customer billing - per account			CDP - per account		$0.000000		$0.000000		*E65 * row 18 or 19*
23										
24	Customer billing - per message			seconds per message	0.000381	$0.000007		$0.000015		
25	Customer billing - per message			CDP - per message		$0.000000		$0.000000		*E68 * row 18 or 19*
26										
27	Treatment outputs			seconds per account	0.271709	$0.004969		$0.010392		
28	Treatment outputs			CDP - per account		$0.000000		$0.000000		*E71 * row 18 or 19*
29										
30	Remittance			seconds per account	0.000981	$0.000018		$0.000038		
31	Remittance			CDP - per account		$0.000000		$0.000000		*E74 * row 18 or 19*
32										
33	Local message processing			seconds per message	0.001087	$0.000020		$0.000042		
34	Local message processing			CDP - per message		$0.000000		$0.000000		*E77 * row 18 or 19*
35										
36	WATS processing			seconds per message	0.001207	$0.000022		$0.000046		
37	WATS processing			CDP - per message		$0.000000		$0.000000		*E80 * row 18 or 19*
38										
39	CMDS processing			seconds per message	0.000313	$0.000006		$0.000012		
40	CMDS processing			CDP - per message		$0.000000		$0.000000		*E83 * row 18 or 19*

QWEST
SOUTH DAKOTA
UNIT INVESTMENTS - Offices (in Dollars)

	A	B	C	D	E	F	G	H	I	J	K
1			End Office Switching							End Office Measurement	
2			IntraOffice		InterOffice		InterOffice - No Trunks				
3			per Call Set-Up	per Conv. Minute	per Call Set-Up	per Conv. Minute	per Call Set-Up	per Conv. Minute		per Call Set-Up	per Conv. Minute
4	Day 8am - 5pm										
5		Direct - Category 1	.008715	.006720	.011146	.005352	.010829	.003505		.000023	.000000
6		Direct - Category 2	.001191	.000884	.010881	.000884	.010819	.000558		.000098	.000000
7											
8		Total Direct	.009906	.007604	.022027	.006236	.021648	.004063		.000121	.000000
9											
10	Evening/Night 5pm - 8am										
11		Direct - Category 1	.001747	.001622	.002551	.001259	.002485	.000822		.000003	.000000
12		Direct - Category 2	.000442	.000367	.002262	.000391	.002244	.000263		.000032	.000000
13											
14		Total Direct	.002189	.001989	.004813	.001649	.004730	.001084		.000035	.000000
15											
16	All Times										
17		Direct - Category 1	.005841	.004618	.007601	.003664	.007388	.002399		.000015	.000000
18		Direct - Category 2	.000882	.000670	.007327	.000681	.007283	.000436		.000071	.000000
19											
20		Total Direct	.006724	.005288	.014928	.004345	.014671	.002835		**.000085**	.000000
21											
22											
23											
24											
25											
26											
27											
28											
29											
30											
31											
32					Service: ALL						
33					Switching Investments include SS7 values.						
34					Year of Investments: 2000						

South Dakota Public Utilities Commission
Docket No. TC 01_____
Qwest Corporation

Attachment 13

Study No. 5432
Direct CLEC to CLEC



Direct CLEC to CLEC Interconnection

SOUTH DAKOTA
JULY 2001

Study ID: 5432

QWEST CORPORATION
Policy and Law

Table of Contents

	Page
I. Executive Summary	3
A. Purpose Scope, and Application	3
B. Description of Service	4
C. Study Methodology	4
D. Description of Long Run Incremental Costs	4
E. Study Assumptions	4
II. Rate Elements	5
III. Work Papers	6
Study Summary	6
Inputs	7
Engineering	10
Cable Racking	11
Cable Connections	12
Cable Hole	13
WCP Non-Recurring	14
WCP Recurring	16
WCP Maintenance	18

Executive Summary

A. PURPOSE, SCOPE, AND APPLICATION

The purpose of this study is to determine the expenses and recurring costs that will be incurred by Qwest to provide Direct CLEC to CLEC Interconnection for customers.

This study develops Qwest average costs. Costs are based on a per unit basis depending upon which element is being requested.

The costs developed in this study can be used for developing pricing for customer - requested items.

Costs are depicted as follows:
- Non-Recurring Caged and Cageless
- Monthly Recurring Caged and Cageless

B. DESCRIPTION OF SERVICE

This service is used to connect together multiple forms of CLECs own collocations within the same Qwest Central Office, i.e., physical to physical, physical to virtual, virtual to virtual, or non-contiguous cageless bays.

Cost Elements

- **Flat Charge** - Includes the design engineering hours required for the job and 20' of new cable racking weighted at 5% of the time. *No cable material or placement costs are included in this rate.*
- **Cable Racking** - Includes the per foot, cable racking charges for DS0, DS1, and DS3. *No cable material or placement costs are included in this rate.*
- **Virtual Connections** - Includes the virtual cable connection charges for DS0, DS1, and DS3. *No cable material or placement costs are included in this rate.* The DS0 Virtual Connection charge is per 100 connections. The DS1 Virtual Connection charge is per 28 connections. The DS3 Virtual Connection charge is per 1 connection. This charge is only applicable if the job consists of one or more virtual collocations. The CLEC/DLEC will provide the connection labor for jobs consisting of physical collocation(s). If the job is a CLEC to CLEC Direct Connect consisting of two virtual collocations, the applicable Virtual Connection charge will be applied twice. If the job is a CLEC to CLEC Direct Connect consisting of two physical collocations, the applicable Virtual Connection charge will be zero.
- **Cable Hole** - Includes the per occurance, cable hole charges required to open and close the cable hole between floors. *No cable material or placement costs are included in this rate.*

C. Study Methodology

The costs were developed from material, engineering and installation labor costs provided by Subject Matter Experts (SME's) in Central Office Engineering and Outside Plant Engineering. *(No cable material or placement costs are included in this study.)*

Monthly maintenance costs were developed by taking the element - specific expense and applying the account - code specific maintenance.

The investments/expenses from the above items were then entered into the WCP (Wholesale Cost Program) model, developed and used within Qwest.

D. DESCRIPTION OF LONG RUN INCREMENTAL COSTS

Long Run Incremental Cost (LRIC) is the method Qwest uses to estimate product and service costs. It provides a measurement of costs over a period of time long enough to fully adjust to changes of output (including changes in the size of facilities, levels of investment, etc.) in order to optimally accommodate this change. This methodology is forward looking in nature (i.e. LRIC uses the latest technology costs or replacement costs.) Since LRIC is forward looking, it does *not* measure historic investment decisions of the corporation.

The Qwest LRIC format disaggregates the cost results on a unitized basis into the components shown below:

Total Service Long Run Incremental Cost (TSLRIC) --Total Service Long Run Incremental Cost is the forward looking cost avoided (or added) by discontinuing (or offering) an entire service or group of services in the most efficient manner, holding constant the production of all other services produced by the firm. This cost is often referred to in economic terms as direct cost.

Shared Cost (SC)-- The cost associated with the provision of multiple services (service family). This cost is not volume sensitive and is eliminated only if the entire service family is discontinued.

Total Service Long Run Incremental Costs plus Shared Costs (TSLRIC+SC)--The Total Service Long Run Incremental Costs for a service plus the Shared Costs of a family of services.

Total Element Long Run Incremental Cost (TELRIC) -- Total Element Long Run Incremental Cost, as defined by the Federal Communications Commission, is the sum of the forward looking direct cost incurred in the production of a network element (as opposed to an entire service), attributed costs considered as shared cost under TSLRIC terminology and selected administrative costs considered as common under TSLRIC terminology.

Common Cost (CC)

For **TSLRIC** purposes, common costs are the current cost incurred for the benefit of the enterprise as a whole. This cost does not vary with the provision of a service or a service family. These costs are sometimes referred to as *general overhead costs.* The Common Cost added to the TSLRIC + SC produces a **Fully Allocated Cost (FAC)** as required by Commission rules.

For **TELRIC** purposes, common costs are the current cost incurred for the benefit of the enterprise as a whole, after those cost that vary with the provisioning of individual network elements are removed. The costs removed from common for TELRIC purposes are included in the TELRIC itself. **Total Long Run Incremental Cost plus TELRIC common costs (TELRIC + CC)** form the basis for pricing Interconnection network elements. TELRIC + CC is the equivalent of fully allocated cost as the term is applied to network elements.

Typically, the cost identified by these cost categories include capital costs for depreciation, return, and income taxes. TSLRIC also includes ongoing operating costs for: administration expense, product management expense, pre sales expense, and business fees.

E. Study Assumptions

1. All cost are forward looking.
2. See "Input Sheet" worksheet on page 7.

Direct CLEC to CLEC Interconnection

Rate Elements

CLEC to CLEC Direct Connections	RC	NRC	Rate Mapping NRC	Rate Mapping RC
Flat Charge (Design Engineering & Installation - NO CABLES.)		$ 769.65	Engineering!$E$8+'Cable Racking'!$F$24	
Cable Racking (per foot)				
DS0	$ 0.22905			Cable Racking'!$G$24+'Cable Racking'!$G$40
DS1	$ 0.24098			Cable Racking'!$G$25+'Cable Racking'!$G$41
DS3	$ 0.21333			Cable Racking'!$G$26+'Cable Racking'!$G$42
Virtual Connections (if applicable - Connections only; NO CABLES.)				
DS0 (per 100 connections)		$ 216.64	Cable Connections'!$G$7	
DS1 (per 28 connections)		$ 98.81	Cable Connections'!$G$12	
DS3 (per 1 connection)		$ 8.55	Cable Connections'!$G$17	
Cable Hole (if applicable)		$ 451.06	Cable Hole'!$D$20	

NOTE: CLEC/DLEC must supply and place cables.
No cable material or placement costs are included in these rates.

Direct CLEC to CLEC Interconnection

Study Name	*Direct CLEC to CLEC Interconnection*	
Study Requester		
Type of Study	*TELRIC*	
Study ID	*5432*	
Cost Factor Group	*Interconnection*	
Study Applications		
Completion Date	*July 11, 2001*	
Cost Analyst		
Study Review	**Reviewer**	**Date**
		July 11, 2001
Cost Models Used	**Model**	**Version and/or Release Date**
	Wholesale Cost Program	*01/08/01 (Version 2.07)*
	Cost Factor Databases	*01/02/01 (Vintage: 00SD02E)*
	Cost Factors Model (TELRIC)	
Cost Factors Used	**Factor**	**Effective Date**
	Capital Recovery	*01/01*
	Maintenance	*01/01*
	Ad Valorem	*01/01*
	Power	*01/01*
	Sales Tax	*01/01*
	Interest During Construction	*01/01*
	COE Land & Bldg	*01/01*
	Directly Assigned Factors	*01/01*
	Directly Attributable Factors	*01/01*
	Common	*01/01*
	Cost Of Money	*10.14%*
Inflation		
Major Cost Drivers		

Direct CLEC to CLEC Interconnection

Study Information

	Value
Filing Month	JULY
Filing Year	2001
State	SD
State Full Name	SOUTH DAKOTA
Run Date	7/11/01
Factor Vintage	*00SD02E*
Study ID	5432

Model Assumptions

	Value	Description/Source
General		
Shipping Rate	13.99%	
Tax on Labor	*Yes*	
Work Completion Interval	90	
USWI Labor Percent	*50%*	
Specific		
Engineering Hours Override (Total)	10	
CPMC Hours	2	Network
Engineering Hours	5.5	Network
P70-Quality Inspec./Install. Hours	2.5	Network
Percent New Cable Racking Required	5%	Network
Average Length (in feet) of New Cable Rack Placement	20	Network
Types of CLEC to CLEC connections		
Virtual to Virtual	2	connections made by QWEST
Virtual to Physical	1	connection made by QWEST
Physical to Physical	0	no connections made by QWEST
Types of CLEC to CLEC service		
New Cable Racking Cable Capacity	3	
New Cable Racking Fill	100%	
Existing Cable Racking Fill	70%	
Engineering Labor Rate	$ 51.76	per hour
Infrastructure Availability Center Labor Rate	$ 56.97	per hour
P70-Quality Inspec./Install. Labor Rate	$ 46.22	per hour

Collocation Model Inputs

		Value	Source
Aerial Support			**Collocation Model**
Grand Total Overall Aerial Support-90 day - Major	$	*9,169.90*	E. 2.1 & 3.1 Aerial Support
Grand Total Overall Aerial Support-90 day - Minor	$	*928.42*	E. 2.1 & 3.1 Aerial Support
Number of Channels - Major		*9.5*	D. Defaults and Overrides - Number of Channels
Number of Channels - Minor		*1.3*	D. Defaults and Overrides - Number of Channels
% of Offices that Require Major Aerial Support		*50%*	E. 2.1 & 3.1 Aerial Support
Overall Aerial Support for 10' of Cable Rack	$	*839.71*	=((E41/E43)+(E42/E44))*E45
Cable Racking			**Collocation Model**
Grand Total Cable Racking -90 day - Major	$	*7,206.01*	E. 2.1 & 3.1 Cable Racking
Grand Total Cable Racking -90 day - Minor	$	*1,508.67*	E. 2.1 & 3.1 Cable Racking
Number of 10' Cable Racking Sections - Major		*9.5*	D. Defaults and Overrides - Number of Channels
Number of 10' Cable Racking Sections - Minor		*1.3*	D. Defaults and Overrides - Number of Channels
% of Offices that Require Major Aerial Support		*50%*	E. 2.1 & 3.1 Cable Racking
Weighted 10' Section of Cable Racking	$	*959.52*	=((E48/E50)+(E49/E51))*E52
ITP			**Collocation Model**
DS0 Capacity Per Rack		*219*	=E. 1.7 ITP
DS1 Capacity Per Rack		*322*	=E. 1.7 ITP

Direct CLEC to CLEC Interconnection

DS3 Capacity Per Rack		833	=E. 1.7 ITP
Defaults and Overrides			**Collocation Model**
Expense per DS0 Cable Foot	$	1.45	=D. Defaults and Overrides
Expense per DS1 Cable Foot	$	1.13	=D. Defaults and Overrides
Expense per DS3 Cable Foot	$	0.89	=D. Defaults and Overrides
Cable Hole			**Collocation Model**
Total 90 Day Labor Expense	$	210.07	=E. 2.1 Cable Hole
			='E. 2.1 Cable Hole', Sum of "Other"& Fire Hole
Total Material Expense	$	95.77	Material Expense
Power Adjustment			**Collocation Model**
Power Maint Expense Adj		0.003256	G. Investment Factors

Labor Rate Inputs

		Value	Source
Placement, per foot (2, 50-pair cables)	$	2.54	='Labor Rates'!$R$18
Each Additional Placement, per foot (2, 50-pair cable)	$	1.99	='Labor Rates'!$R$19
Placement, per foot (1, 28-pair cable set)	$	2.77	='Labor Rates'!$R$11
Each Additional Placement, per foot (1, 28-pair cable set)	$	2.21	='Labor Rates'!$R$12
Placement, per foot (1 Coax Cable)	$	2.77	='Labor Rates'!$R$13
Each Additional Placement, per foot (1 Coax Cable)	$	2.30	='Labor Rates'!$R$14
Per 100-pair Connection	$	161.61	='Labor Rates'!$R$29
Per 28-pair Connection	$	73.71	='Labor Rates'!$R$27
Per 1 Coax Connection	$	6.38	='Labor Rates'!$R$15

Factors

	Value
WCP Version	2.07
Cost of Money	10.14%
Capital Recovery	01/01
Maintenance	01/01
Ad Valorem	01/01
Power	01/01
Sales Tax	01/01
Interest During Construction	01/01
COE Land & Bldg	01/01
Directly Assigned Factors	01/01
Directly Attributable Factors	01/01
Common	01/01
Vintage	00SD02E
Investment Loadings	
Power	0.069700
Sales Tax	0.056400
Interest During Construction	0.006100
COE Land And Building Investment	
Building	0.053600
Land	0.001400
Investment Based Monthly Direct Costs	
Depreciation	0.109717
Cost Of Money	0.045455
Income Tax Expense	0.017189
Maintenance	0.032498
Ad Valorem Tax	0.008613
COE Land And Building Cost	
COE Building	0.159969
COE Land	0.163967

Direct CLEC to CLEC Interconnection

Directly Assigned	
Product Management Expense	*0.025565*
Sales Expense	*0.009225*
Product Advertising Expense	*0.000000*
Business Fees (Other Operating Taxes)	*0.002025*
Directly Attributed	
Network Operations	*0.040880*
Network Support Assets	*0.015364*
General Support Assets	*0.069508*
General Purpose Computers	*0.034714*
Uncollectible	*0.000401*
Accounting & Finance Expense	*0.008839*
Human Resources Expense	*0.008145*
Information Management Expense	*0.057009*
Intangibles	*0.002091*
State Prescribed Directly Attributed	*0.000000*
Common	
Executive Expense	*0.007805*
Planning Expense	*0.000580*
External Relations Expense	*0.013029*
Legal Expense	*0.006148*
Other Procurement Expense	*0.002359*
Research & Development Expense	*0.000036*
Other General and Admin Expense	*0.015212*
State Prescribed Common	*0.000000*

Engineering

CPMC Hours	2.00		
Expense/Unit	$ 56.97		
		$	113.94
Infrastructure Availability Center Hours	5.50		
Expense/Unit	$ 51.76		
		$	284.68
Quality Inspection Hours	2.50		
Expense/Unit	$ 46.22		
		$	115.55

Total Expense		**$**	**514.17**
Total Loaded Cost		**$**	**689.25**

ENGINEERING REQUIREMENTS

Collocation Project Management Center — **HOURS: 2**
- Application Verification
- Date Set
- Project Management

Common Systems Planning Engineering Center — **HOURS: 5.5**
- Initialize Billing Authorization Number
- Obtain Funding Authorization
- Prepare Engineering Package
- CPD

& Engineering
- Field Engineering Walk Through
- Structure Verification
- Complete Walk Through Report
- Update Design Work Package
- Update Engineering Prints

Forms/Follow-up — **HOURS: 2.5**
- Quality Check
- SICM/ATR Cable Route Walk Through

Cable Racking

	Material & Labor per Bay	Feet per Section	Expense per Foot
Aerial Support	$ 839.71	10.00	$ 83.97
Cable Rack (per 10' section)	$ 959.52	10.00	$ 95.95
			$ 179.92

New Cable Racking

Cable Type	Cable Capacity	Expense Per Foot per Cable	Fill	Cost Per Foot per Cable
DS0	3	**$ 59.97**	100%	**$ 59.97**
DS1	3	**$ 59.97**	100%	**$ 59.97**
DS3	3	**$ 59.97**	100%	**$ 59.97**

Assumptions

Percent New Cable Racking Required	**5%**
Average Length (in feet) of New Cable Rack Placement	**20**

Expense

Total DS0 Per Foot Expense	**$ 59.97**
Total DS1 Per Foot Expense	**$ 59.97**
Total DS3 Per Foot Expense	**$ 59.97**

Loaded	Non-Recurring	Recurring
DS0 Cable Racking (per foot)	**$ 80.40**	**$ 0.19591**
DS1 Cable Racking (per foot)	**$ 80.40**	**$ 0.19591**
DS3 Cable Racking (per foot)	**$ 80.40**	**$ 0.19591**

Existing Cable Racking

Cable	Cable Capacity	Expense Per Foot per Cable	Fill	Cost Per Foot per Cable
DS0	219	**$ 0.82**	70%	**$ 1.17**
DS1	161	**$ 1.12**	70%	**$ 1.60**
DS3	417	**$ 0.43**	70%	**$ 0.62**

Expense

Total DS0 Per Foot Expense	**$ 1.17**
Total DS1 Per Foot Expense	**$ 1.60**
Total DS3 Per Foot Expense	**$ 0.62**

Loaded	Non-Recurring	Recurring
DS0 Cable Racking (per foot)	-	**$ 0.03313**
DS1 Cable Racking (per foot)	-	**$ 0.04507**
DS3 Cable Racking (per foot)	-	**$ 0.01742**

Cable Connections

NOTE: Qwest provides Cable Connections for Virtual Collocations only.

		Labor	Quantity	Total	
DS0					
	Per 100-pair Connection	$ 161.61	1.00	$ 161.61	
	Total Connection Expense				**$ 161.61**
	Loaded				**$ 216.64**
DS1					
	Per 28-pair Connection	$ 73.71	1.00	$ 73.71	
	Total Connection Expense				**$ 73.71**
	Loaded				**$ 98.81**
DS3					
	Per 1 Coax Connection	$ 6.38	$ 1.00	$ 6.38	
	Total Connection Expense				**$ 6.38**
	Loaded				**$ 8.55**

Cable Hole

(For Cable Hole detail, see Collocation Model)

Total 90 Day Labor Expense	$ 210.07	(see Inputs)
Total Material Expense	$ 95.77	(see Inputs)
	$ 305.84	
Shipping	$ 13.40	
Sales Tax	$ 17.25	
Cable Hole Total		$ 336.48

Total Connection Expense	$ 336.48
Loaded	**$ 451.06**

Direct CLEC to CLEC Interconnection

WCP Non-Recurring

	Factor Value	Engineering Cost	Cable Racking DS0	Cable Racking DS1	Cable Racking DS3	Connections DS0	Connections DS1	Connections DS3	Cable Hole
Expense		$ 514.17	$ 59.97	$ 59.97	$ 59.97	$ 161.61	$ 73.71	$ 6.38	$ 336.48
Directly Assigned									
Product Management Expense	0.025565	$ 13.14	$ 1.53	$ 1.53	$ 1.53	$ 4.13	$ 1.88	$ 0.16	$ 8.60
Sales Expense	0.009225	$ 4.74	$ 0.55	$ 0.55	$ 0.55	$ 1.49	$ 0.68	$ 0.06	$ 3.10
Product Advertising Expense	0.000000	$ -	$ -	$ -	$ -	$ -	$ -	$ -	$ -
Business Fees (Other Operating Taxes)	0.002025	$ 1.08	$ 0.13	$ 0.13	$ 0.13	$ 0.34	$ 0.15	$ 0.01	$ 0.71
Directly Assigned Costs		$ 18.97	$ 2.21	$ 2.21	$ 2.21	$ 5.96	$ 2.72	$ 0.24	$ 12.41
Total Direct Monthly Costs		$ 533.14	$ 62.19	$ 62.19	$ 62.19	$ 167.57	$ 76.43	$ 6.61	$ 348.90
Directly Attributed									
Network Operations	0.040880	$ 21.79	$ 2.54	$ 2.54	$ 2.54	$ 6.85	$ 3.12	$ 0.27	$ 14.26
Network Support Assets	0.015364	$ 8.19	$ 0.96	$ 0.96	$ 0.96	$ 2.57	$ 1.17	$ 0.10	$ 5.36
General Support Assets	0.069508	$ 37.06	$ 4.32	$ 4.32	$ 4.32	$ 11.65	$ 5.31	$ 0.46	$ 24.25
General Purpose Computers	0.034714	$ 18.51	$ 2.16	$ 2.16	$ 2.16	$ 5.82	$ 2.65	$ 0.23	$ 12.11
Uncollectible	0.000401	$ 0.21	$ 0.02	$ 0.02	$ 0.02	$ 0.07	$ 0.03	$ 0.00	$ 0.14
Accounting & Finance Expense	0.008839	$ 4.71	$ 0.55	$ 0.55	$ 0.55	$ 1.48	$ 0.68	$ 0.06	$ 3.08
Human Resources Expense	0.008145	$ 4.34	$ 0.51	$ 0.51	$ 0.51	$ 1.36	$ 0.62	$ 0.05	$ 2.84
Information Management Expense	0.057009	$ 30.39	$ 3.55	$ 3.55	$ 3.55	$ 9.55	$ 4.36	$ 0.38	$ 19.89
Intangibles	0.002091	$ 1.11	$ 0.13	$ 0.13	$ 0.13	$ 0.35	$ 0.16	$ 0.01	$ 0.73
State Prescribed Directly Attributed	0.000000	$ -	$ -	$ -	$ -	$ -	$ -	$ -	$ -
Directly Attributed Costs		$ 126.33	$ 14.74	$ 14.74	$ 14.74	$ 39.71	$ 18.11	$ 1.57	$ 82.67
TELRIC		$ 659.46	$ 76.92	$ 76.92	$ 76.92	$ 207.27	$ 94.54	$ 8.18	$ 431.57

Direct CLEC to CLEC Interconnection

Loading Calculations (continued)

Common

Executive Expense	0.007805	$	5.15	$	0.60	$	0.60	$	0.60	$	1.62	$	0.74	$	0.06	$ 3.37
Planning Expense	0.000580	$	0.38	$	0.04	$	0.04	$	0.04	$	0.12	$	0.05	$	0.00	$ 0.25
External Relations Expense	0.013029	$	8.59	$	1.00	$	1.00	$	1.00	$	2.70	$	1.23	$	0.11	$ 5.62
Legal Expense	0.006148	$	4.05	$	0.47	$	0.47	$	0.47	$	1.27	$	0.58	$	0.05	$ 2.65
Other Procurement Expense	0.002359	$	1.56	$	0.18	$	0.18	$	0.18	$	0.49	$	0.22	$	0.02	$ 1.02
Research & Development Expense	0.000036	$	0.02	$	0.00	$	0.00	$	0.00	$	0.01	$	0.00	$	0.00	$ 0.02
Other General and Admin Expense	0.015212	$	10.03	$	1.17	$	1.17	$	1.17	$	3.15	$	1.44	$	0.12	$ 6.57
State Prescribed Common	0.000000	$	-	$	-	$	-	$	-	$	-	$	-	$	-	$ -
Common Costs		$	29.79	$	3.47	$	3.47	$	3.47	$	9.36	$	4.27	$	0.37	$ 19.49
TELRIC + Common Costs		$	689.25	$	80.40	$	80.40	$	80.40	$	216.64	$	98.81	$	8.55	$ 451.06

Direct CLEC to CLEC Interconnection

WCP Recurring

	Factor Value	Cable Racking DS0	Cable Racking DS1	Cable Racking DS3
Investment		$1.1737	$1.5965	$0.6171
Investment Loadings				
Power	0.069700	$0.0818	$0.1113	$0.0430
Sales Tax	0.056400	$0.0708	$0.0963	$0.0372
Interest During Construction	0.006100	$0.0081	$0.0111	$0.0043
Loaded Investment		$1.3344	$1.8151	$0.7017
COE Land And Building Investment				
Building	0.053600	$0.0715	$0.0973	$0.0376
Land	0.001400	$0.0019	$0.0025	$0.0010
Investment With COE Land And Bldg		$1.4078	$1.9150	$0.7402
Investment Based Monthly Direct Costs				
Depreciation	0.109717	$0.0122	$0.0166	$0.0064
Cost Of Money	0.045455	$0.0051	$0.0069	$0.0027
Income Tax Expense	0.017189	$0.0019	$0.0026	$0.0010
Maintenance	0.032498	$0.0036	$0.0049	$0.0019
Ad Valorem Tax	0.008613	$0.0010	$0.0013	$0.0005
Investment Based Monthly Direct Costs		$0.0237	$0.0323	$0.0125
COE Land And Building Cost				
COE Building	0.159969	$0.0010	$0.0013	$0.0005
COE Land	0.163967	$0.0000	$0.0000	$0.0000
COE Land And Building Monthly Costs		$0.0010	$0.0013	$0.0005
Total Investment Based Monthly Costs		$0.0247	$0.0336	$0.0130
Directly Assigned				
Product Management Expense	0.025565	$0.0006	$0.0009	$0.0003
Sales Expense	0.009225	$0.0002	$0.0003	$0.0001
Product Advertising Expense	0.000000	$0.0000	$0.0000	$0.0000
Business Fees (Other Operating Taxes)	0.002025	$0.0001	$0.0001	$0.0000
Directly Assigned Monthly Costs		$0.0009	$0.0012	$0.0005
Total Direct Monthly Costs		$0.0256	$0.0349	$0.0135

Direct CLEC to CLEC Interconnection

	Factor Value	Cable Racking DS0	Cable Racking DS1	Cable Racking DS3
Directly Attributed				
Network Operations	0.040880	$0.0010	$0.0014	$0.0006
Network Support Assets	0.015364	$0.0004	$0.0005	$0.0002
General Support Assets	0.069508	$0.0018	$0.0024	$0.0009
General Purpose Computers	0.034714	$0.0009	$0.0012	$0.0005
Uncollectible	0.000401	$0.0000	$0.0000	$0.0000
Accounting & Finance Expense	0.008839	$0.0002	$0.0003	$0.0001
Human Resources Expense	0.008145	$0.0002	$0.0003	$0.0001
Information Management Expense	0.057009	$0.0015	$0.0020	$0.0008
Intangibles	0.002091	$0.0001	$0.0001	$0.0000
State Prescribed Directly Attributed	0.000000	$0.0000	$0.0000	$0.0000
Total Directly Attributed Monthly Costs		$0.0061	$0.0083	$0.0032
TELRIC		$0.0317	$0.0431	$0.0167
Common				
Executive Expense	0.007805	$0.0002	$0.0003	$0.0001
Planning Expense	0.000580	$0.0000	$0.0000	$0.0000
External Relations Expense	0.013029	$0.0004	$0.0006	$0.0002
Legal Expense	0.006148	$0.0002	$0.0003	$0.0001
Other Procurement Expense	0.002359	$0.0001	$0.0001	$0.0000
Research & Development Expense	0.000036	$0.0000	$0.0000	$0.0000
Other General and Admin Expense	0.015212	$0.0005	$0.0007	$0.0003
State Prescribed Common	0.000000	$0.0000	$0.0000	$0.0000
Common Costs		$0.0014	$0.0019	$0.0008
TELRIC + Common Costs		$0.0331	$0.0451	$0.0174

Direct CLEC to CLEC Interconnection

Monthly Maintenance

	Factor Value	Cable Racking DS0	Cable Racking DS1	Cable Racking DS3
Investment		$ 59.97	$ 59.97	$ 59.97
Investment Based Costs				
Maintenance	0.029242	$0.14615	$0.14615	$0.14615
Directly Assigned				
Product Management Expense	0.025565	$0.00374	$0.00374	$0.00374
Sales Expense	0.009225	$0.00135	$0.00135	$0.00135
Product Advertising Expense	0.000000	$0.00000	$0.00000	$0.00000
Business Fees (Other Operating Taxes)	0.002025	$0.00031	$0.00031	$0.00031
Directly Assigned Costs		$0.00539	$0.00539	$0.00539
Total Direct Costs		$0.15154	$0.15154	$0.15154
Directly Attributed				
Network Operations	0.040880	$0.00619	$0.00619	$0.00619
Network Support Assets	0.015364	$0.00233	$0.00233	$0.00233
General Support Assets	0.069508	$0.01053	$0.01053	$0.01053
General Purpose Computers	0.034714	$0.00526	$0.00526	$0.00526
Uncollectible	0.000401	$0.00006	$0.00006	$0.00006
Accounting & Finance Expense	0.008839	$0.00134	$0.00134	$0.00134
Human Resources Expense	0.008145	$0.00123	$0.00123	$0.00123
Information Management Expense	0.057009	$0.00864	$0.00864	$0.00864
Intangibles	0.002091	$0.00032	$0.00032	$0.00032
Directly Attributed Costs		$0.03591	$0.03591	$0.03591
TELRIC		$0.18745	$0.18745	$0.18745

Direct CLEC to CLEC Interconnection

Monthly Maintenance (continued)

Common				
Executive Expense	0.007805	$0.00146	$0.00146	$0.00146
Planning Expense	0.000580	$0.00011	$0.00011	$0.00011
External Relations Expense	0.013029	$0.00244	$0.00244	$0.00244
Legal Expense	0.006148	$0.00115	$0.00115	$0.00115
Other Procurement Expense	0.002359	$0.00044	$0.00044	$0.00044
Research & Development Expense	0.000036	$0.00001	$0.00001	$0.00001
Other General and Admin Expense	0.015212	$0.00285	$0.00285	$0.00285
Common Costs		$0.00847	$0.00847	$0.00847
TELRIC + Common Costs		$0.19591	$0.19591	$0.19591

South Dakota Public Utilities Commission
Docket No. TC 01_____
Qwest Corporation

Attachment 14

Study No. 5363
Low Side Channel Performance

Executive Summary

SOUTH DAKOTA

DS0 LOW SIDE CHANNELIZATION

CHANNEL PERFORMANCE

STUDY ID 5363

PRESCRIBED LIVES
10.14% COM

2001 RECURRING COST STUDY

JUNE 2001

DS0 LOW SIDE CHANNELIZATION

SOUTH DAKOTA
2001

Table of Contents

Section 1 – Study Output

	Page
Executive Summary	1
Study Summary	5
Cost Summary	6
Total Product Costs	8
Investment Cost Calculation	9

Section 2 – Cost Calculations

WINPC3 Investments	10
WINPC3 Parameters	11
WINPC3 ACF Inputs	12
WINPC3 ACF Outputs	15
Channel Plug Investment	18
Investment CALC for Low Side Channel Performance	19
Investment CALC for Low Side Channel Performance, MUX	23
Plug Weighted Investment	26
CRIS Billed	29
DLC, Digital Line Carrier	42

A. PURPOSE, SCOPE, AND APPLICATION

The purpose of this study is to estimate Qwest's 2001 long-run incremental costs for DS0 Low Side Channelization within the state of South Dakota of Local Interconnection Service.

This study develops statewide average Total Element Long Run Incremental Costs (TELRIC). Costs are specific to the state of South Dakota and are stated on a per channel basis, unless specified otherwise. ***Cost results are based on Commission Prescribed Lives and 10.14 % Cost Of Money (COM).***

B. DESCRIPTION OF SERVICE

DS0 Low Side Channelization provides the transmission facilities between the customer designated premises, to the serving wire center or to the wire center where the CLEC is collocated, or to multiplexing. Voice Grade/DSO facilities are available for Channel Performance.

This cost study includes the costs for the following components:

> The Channel Performance rate category provides the electronic equipment, which is added to the Link to provide the desired level of transmission performance. It modifies the circuit with the basic performance necessary for the circuit function. This channel supports 300 to 3000 Hz. Four signaling options are available. They include Loop Start, Ground Start, Reverse Battery, and No Signaling.

The following are definitions of the Channel Performance services provided by Qwest Communications. The technical parameters of these are the same as those of the identified Voice Grade services (i.e., VG2, VG3 or VG7).

1. Voice Grade Service Channel Performance

- The Loop Start Signaling is based on Voice Grade 2 (VG2). This is suitable for the access segment of voice line-type switched special service circuits such as Foreign Exchange (FX) circuits. The service is suitable for the station or closed-end at the End-User only.
- The Ground Start Signaling is based on Voice Grade 3 (VG3). This is suitable for the access segment of voice trunk-type circuits. The service is suitable for the closed-end at the End-User only.
- The Reverse Battery Signaling is based on Voice Grade 3. This is suitable for the access segment of voice trunk-type circuits.
- The No Signaling is based on Voice Grade 7. This is suitable for the access segment of "permissive data" type of private line services.

C. STUDY METHODOLOGY

Channel Performance - Channel Performance investments are calculated using a Microsoft Excel® spreadsheet. The Channel Performance spreadsheet estimates the forward looking installed investment associated with DS0 circuits between a Serving Wire Center and the wire center where the CLEC is collocated.

The TELRIC Windows Personal Computer Cost Calculator (Wholesale Cost Program) was used to convert installed investments to monthly costs by applying appropriate investment and expense factors to the installed investment.

D. Description OF TOTAL ELEMENT LONG RUN INCREMENTAL COSTS

Total Element Long Run Incremental Cost (TELRIC) studies are performed by Qwest to estimate the economic cost of providing network elements. The QWEST'S TELRIC studies identify the forward-looking costs associated with the provision of the total quantity of a network element in the long run. The *forward-looking* Qwest TELRIC studies identify the costs that are likely to be incurred in the future, and consider the latest forward-looking technologies and methods of operation that are currently available. These studies are *not* embedded or historical, and do not measure the impact of prior investment decisions by the corporation. The Qwest TELRIC studies also identify the *long run* costs associated with providing a network element—reflecting a time period over which all inputs (including changes in the size of facilities, levels of investment, etc.) can be adjusted.

Qwest TELRIC studies identify recurring and nonrecurring costs. *Recurring costs* are the ongoing costs associated with providing a network element. Recurring costs are generally investment-related and include both capital costs and operating expenses. These costs are often presented as a cost per month or per unit of usage (e.g., minute of use) and are incurred throughout the time period the network element is provided to a customer. *Nonrecurring costs* are the one-time costs that are incurred at the time a customer establishes, disconnects or changes service. These costs normally result from a customer order, and are predominantly labor-related.

The Qwest recurring and nonrecurring TELRIC studies identify costs on a unitized basis and disaggregates the cost results into the following components:

Total Direct Costs are the forward-looking costs that are caused by offering the network element in the long run. These costs would not be incurred if the network elements were not offered. Total Direct Costs reflect the per-unit forward looking cost associated with providing the entire network element in the most efficient manner, holding constant the production of all other network elements produced by

the firm. For recurring element costs Total Direct Costs include the capital costs (e.g., depreciation, return, taxes) and maintenance costs associated with the investment required to provision a network element, along with other network element-specific costs such as product management expense. For non-recurring costs, Total Direct Costs include the labor-related expenses associated with the provision of a network element, along with other network element-specific costs such as product management expense.

Directly Attributed Costs include network administration and engineering costs and various administrative costs such as the cost of general-purpose computers and accounting and finance expenses. These costs are not directly associated with a specific network element. However, these costs vary with the provision of all network elements, and are not common to the entire firm.

Total Element Long Run Incremental Costs (TELRIC) represent the sum of Total Direct Costs and Directly Attributed Costs. This measure of costs includes the forward-looking costs incurred in the provision of a network element. This measure of costs is consistent with TELRIC as defined by the FCC.

Common Costs are associated with the enterprise as a whole. These costs do vary based on the total size of the firm, but do not vary with the provisioning of individual network elements. These costs are avoidable only with the elimination of the entire firm, and are sometimes referred to as *general overhead costs.*

Fully Allocated Costs represent the sum of Total Element Long Run Incremental Cost plus Common Costs (TELRIC + CC).

E. STUDY ASSUMPTIONS

1) Costs are based on a least cost scorched node scenario and represent the cost of fully replacing the network required to provision the service, beginning from the existing grid of network nodes used by Qwest today.

2) All network investments are forward-looking:

3) All costs displayed are a 2001 level.

4) Cost results are based on Commission Prescribed Lives and 10.14 % COM.

Study Name	*CHANNEL PERFORMANCE*	
Study Requester	*Tony Romano*	
Type of Study	*TELRIC*	
Study ID	*5363*	
Cost Factor Group	*Interconnection*	
Study Applications		
Completion Date	*June 27, 2001*	
Cost Analyst	*David Workman*	
Study Review	**Reviewer**	**Date**
		June 27, 2001
Models Used	**Model**	**Version**
	Wholesale Cost Program	*2.07*
	Cost Factor Databases	*00SD02E*
	Cost Factors Model (TELRIC)	*00V2*
Cost Factors Used	**Factor**	**Effective Date**
	Capital Recovery	*01/01*
	Maintenance	*01/01*
	Ad Valorem	*01/01*
	COE Land & Bldg	*01/01*
	Directly Assigned Factors	*01/01*
	Billing & Collection (PL)	*01/01*
	Directly Attributable Factors	*01/01*
	Common	*01/01*
	Cost Of Money	*10.14%*
Inflation		
Major Cost Drivers		

Parameter File: F:\R980000\-SD_LoSideChann\LSCjune01\LSCSD.xls, Sheet "WINPC3 Parameters"
State(s): SD
Database Vintage: 00SD02E
Factors For: Interconnection
Report Type: ICM Format
Decimal Places: 2
Costs Format: Monthly
Group Totals: Yes
ACF Input: F:\R980000\-SD_LoSideChann\LSCjune01\LSCSD.xls, Sheet "WINPC3 ACF Inputs"
ACF Output: F:\R980000\-SD_LoSideChann\LSCjune01\LSCSD.xls, Sheet "WINPC3 ACF Outputs"
Investment: F:\R980000\-SD_LoSideChann\LSCjune01\LSCSD.xls, Sheet "WINPC3 Investments"
Output: F:\R980000\-SD_LoSideChann\LSCjune01\LSCSD.xls, Sheet "WINPC3 Output"

State: South Dakota

Description	USOC	Loaded Investment	Direct Expense	Total Direct	Network Support	Directly ttributed	TELRIC	Common	TELRIC + Common
LOW SIDE CHANNEL PERFORMANCE		$554.86	$0.00	$10.14	$0.57	$2.40	$12.55	$0.57	$13.12
Low Side Channel Performance with MULTIPLEXING		$316.53	$0.00	$5.79	$0.33	$1.37	$7.16	$0.32	$7.48

	6/27/01 9:02 AM				
Row	South Dakota	Source or Calculation	Factor Value	LOW SIDE CHANNEL PERFORMANCE	Low Side Channel Performance with MULTIPLEXING
			A	B	C
1	**Investment**	sl r"Total" cD		554.86	316.53
2					
3	***Investment Based Costs***	***sl r"Total" cK***		9.74	5.56
4					
5	Direct Expenses			0.00	0.00
6	Miscellaneous Expenses			0.00	0.00
7	Billing & Collection - PL	cA*(r8-r6)	0.004304	0.04	0.02
8	***Investment Based + Direct Costs***			9.78	5.58
9					
10	***Directly Assigned***				
11	Product Management Expense	cA*(r8-r6)	0.025565	0.25	0.14
12	Sales Expense	cA*(r8-r6)	0.009225	0.09	0.05
13	Product Advertising Expense	cA*(r8-r6)	0.000000	0.00	0.00
14	Business Fees (Other Operating Taxes)	cA*(Sum(r8:r13)-r6)	0.002025	0.02	0.01
15	***Directly Assigned Costs***	***Sum r11:r14***		0.36	0.21
16					
17	***Total Direct Costs***	***r8 + r15***		10.14	5.79
18					
19	***Directly Attributed***				
20	Network Operations	cA*(r17-r6)	0.040880	0.41	0.24
21	Network Support Assets	cA*(r17-r6)	0.015364	0.16	0.09
22	General Support Assets	cA*(r17-r6)	0.069508	0.71	0.40
23	General Purpose Computers	cA*(r17-r6)	0.034714	0.35	0.20
24	Uncollectible	cA*(r17-r6)	0.000401	0.00	0.00
25	Accounting & Finance Expense	cA*(r17-r6)	0.008839	0.09	0.05
26	Human Resources Expense	cA*(r17-r6)	0.008145	0.08	0.05
27	Information Management Expense	cA*(r17-r6)	0.057009	0.58	0.33
28	Intangibles	cA*(r17-r6)	0.002091	0.02	0.01
29	***Directly Attributed Costs***	***Sum r20:r28***		2.40	1.37
30					
31	***TELRIC***	***r17 + r29***		12.55	7.16
32					
33	***Common***				
34	Executive Expense	cA*(r31-r6)	0.007805	0.10	0.06
35	Planning Expense	cA*(r31-r6)	0.000580	0.01	0.00
36	External Relations Expense	cA*(r31-r6)	0.013029	0.16	0.09
37	Legal Expense	cA*(r31-r6)	0.006148	0.08	0.04
38	Other Procurement Expense	cA*(r31-r6)	0.002359	0.03	0.02
39	Research & Development Expense	cA*(r31-r6)	0.000036	0.00	0.00
40	Other General and Admin Expense	cA*(r31-r6)	0.015212	0.19	0.11
41	***Common Costs***	***Sum r34:r40***		0.57	0.32
42					
43	***TELRIC + Common Costs***	***r31 + r41***		13.12	7.48

6/27/01
South Dakota

CHANNEL PERFORMANCE

LOW SIDE CHANNEL PERFORMANCE

Acct	FRC	Account Name	Investment	Depreciation	Cost Of Money	Income Tax	Ad Valorem	Maintenance	Switch RTU	Total Capital Costs
2232.3	357C	Circuit Equipment - Other Digital Equipment	525.93	4.81	1.99	0.75	0.38	1.42	0.00	9.36
2111	20C	Land	0.74	0.00	0.01	0.00	0.00	0.00		0.01
2121	110C	Building	28.19	0.06	0.18	0.07	0.02	0.05		0.38
		Total	**554.86**	**4.87**	**2.17**	**0.82**	**0.40**	**1.48**	**0.00**	**9.74**

Low Side Channel Performance with MULTIPLEXING

2232.3	357C	Circuit Equipment - Other Digital Equipment	300.03	2.74	1.14	0.43	0.22	0.81	0.00	5.34
2111	20C	Land	0.42	0.00	0.00	0.00	0.00	0.00		0.01
2121	110C	Building	16.08	0.03	0.10	0.04	0.01	0.03		0.21
		Total	**316.53**	**2.78**	**1.24**	**0.47**	**0.23**	**0.84**	**0.00**	**5.56**

	A	B	C	D	E	F	G	H
1	Investment							
2	STUDY	CHANNEL PERFORMANCE						
3	DATE	6/26/01						
4	GROUP	LOW SIDE CHANNEL PERFORMANCE						
5	EF&I	SD	525.930449216	0.	0.	357C	Analog Circuit Equipment	Channel Plug Investments
6	GROUP	Low Side Channel Performance with MULTIPLEXING						
7	EF&I	SD	300.0258818807	0.	0.	357C	Analog Circuit Equipment	Channel Plug Investments

	A	B
1	Parameter	
2	SD	
3	7	
4	2	
5	Monthly	12
6	Yes	
7	No	
8		
9	11	
10	5363	

	A	B	C	D	E	F	G	H	I	J	K	L	M
1	ACFIN												
2	00SD02E												
3	20C	DEPR-AVG	COM-AVG	IT-AVG	MTNC-TOT	ADVAL	BLDG	LAND	PRODMAN	SALESEXP	ADVER	BF	NTWKOP
4	110C	DEPR-AVG	COM-AVG	IT-AVG	MTNC-TOT	ADVAL	BLDG	LAND	PRODMAN	SALESEXP	ADVER	BF	NTWKOP
5	57C	DEPR-AVG	COM-AVG	IT-AVG	MTNC-TOT	ADVAL	BLDG	LAND	PRODMAN	SALESEXP	ADVER	BF	NTWKOP
6	257C	DEPR-AVG	COM-AVG	IT-AVG	MTNC-TOT	ADVAL	BLDG	LAND	PRODMAN	SALESEXP	ADVER	BF	NTWKOP
7	357C	DEPR-AVG	COM-AVG	IT-AVG	MTNC-TOT	ADVAL	BLDG	LAND	PRODMAN	SALESEXP	ADVER	BF	NTWKOP
8	858C	DEPR-AVG	COM-AVG	IT-AVG	MTNC-TOT	ADVAL	BLDG	LAND	PRODMAN	SALESEXP	ADVER	BF	NTWKOP
9	1C	DEPR-AVG	COM-AVG	IT-AVG	MTNC-TOT	ADVAL	BLDG	LAND	PRODMAN	SALESEXP	ADVER	BF	NTWKOP
10	52C	DEPR-AVG	COM-AVG	IT-AVG	MTNC-TOT	ADVAL	BLDG	LAND	PRODMAN	SALESEXP	ADVER	BF	NTWKOP
11	42C	DEPR-AVG	COM-AVG	IT-AVG	MTNC-TOT	ADVAL	BLDG	LAND	PRODMAN	SALESEXP	ADVER	BF	NTWKOP
12	5C	DEPR-AVG	COM-AVG	IT-AVG	MTNC-TOT	ADVAL	BLDG	LAND	PRODMAN	SALESEXP	ADVER	BF	NTWKOP
13	35C	DEPR-AVG	COM-AVG	IT-AVG	MTNC-TOT	ADVAL	BLDG	LAND	PRODMAN	SALESEXP	ADVER	BF	NTWKOP
14	62C	DEPR-AVG	COM-AVG	IT-AVG	MTNC-TOT	ADVAL	BLDG	LAND	PRODMAN	SALESEXP	ADVER	BF	NTWKOP
15	45C	DEPR-AVG	COM-AVG	IT-AVG	MTNC-TOT	ADVAL	BLDG	LAND	PRODMAN	SALESEXP	ADVER	BF	NTWKOP
16	4C	DEPR-AVG	COM-AVG	IT-AVG	MTNC-TOT	ADVAL	BLDG	LAND	PRODMAN	SALESEXP	ADVER	BF	NTWKOP
17	3C	DEPR-AVG	COM-AVG	IT-AVG	MTNC-TOT	ADVAL	BLDG	LAND	PRODMAN	SALESEXP	ADVER	BF	NTWKOP

	N	O	P	Q	R	S	T	U	V	W	X	Y	Z	AA
1														
2														
3	NTWKST	GENLST	COMPTR	UNCOLL	ACCNT	HREXP	INTAN	EXEC	PLAN	EXTERN	INFOR	LEGAL	PROCR	RDEXP
4	NTWKST	GENLST	COMPTR	UNCOLL	ACCNT	HREXP	INTAN	EXEC	PLAN	EXTERN	INFOR	LEGAL	PROCR	RDEXP
5	NTWKST	GENLST	COMPTR	UNCOLL	ACCNT	HREXP	INTAN	EXEC	PLAN	EXTERN	INFOR	LEGAL	PROCR	RDEXP
6	NTWKST	GENLST	COMPTR	UNCOLL	ACCNT	HREXP	INTAN	EXEC	PLAN	EXTERN	INFOR	LEGAL	PROCR	RDEXP
7	NTWKST	GENLST	COMPTR	UNCOLL	ACCNT	HREXP	INTAN	EXEC	PLAN	EXTERN	INFOR	LEGAL	PROCR	RDEXP
8	NTWKST	GENLST	COMPTR	UNCOLL	ACCNT	HREXP	INTAN	EXEC	PLAN	EXTERN	INFOR	LEGAL	PROCR	RDEXP
9	NTWKST	GENLST	COMPTR	UNCOLL	ACCNT	HREXP	INTAN	EXEC	PLAN	EXTERN	INFOR	LEGAL	PROCR	RDEXP
10	NTWKST	GENLST	COMPTR	UNCOLL	ACCNT	HREXP	INTAN	EXEC	PLAN	EXTERN	INFOR	LEGAL	PROCR	RDEXP
11	NTWKST	GENLST	COMPTR	UNCOLL	ACCNT	HREXP	INTAN	EXEC	PLAN	EXTERN	INFOR	LEGAL	PROCR	RDEXP
12	NTWKST	GENLST	COMPTR	UNCOLL	ACCNT	HREXP	INTAN	EXEC	PLAN	EXTERN	INFOR	LEGAL	PROCR	RDEXP
13	NTWKST	GENLST	COMPTR	UNCOLL	ACCNT	HREXP	INTAN	EXEC	PLAN	EXTERN	INFOR	LEGAL	PROCR	RDEXP
14	NTWKST	GENLST	COMPTR	UNCOLL	ACCNT	HREXP	INTAN	EXEC	PLAN	EXTERN	INFOR	LEGAL	PROCR	RDEXP
15	NTWKST	GENLST	COMPTR	UNCOLL	ACCNT	HREXP	INTAN	EXEC	PLAN	EXTERN	INFOR	LEGAL	PROCR	RDEXP
16	NTWKST	GENLST	COMPTR	UNCOLL	ACCNT	HREXP	INTAN	EXEC	PLAN	EXTERN	INFOR	LEGAL	PROCR	RDEXP
17	NTWKST	GENLST	COMPTR	UNCOLL	ACCNT	HREXP	INTAN	EXEC	PLAN	EXTERN	INFOR	LEGAL	PROCR	RDEXP

	AB	AC
1		
2		
3	GENL	BC
4	GENL	BC
5	GENL	BC
6	GENL	BC
7	GENL	BC
8	GENL	BC
9	GENL	BC
10	GENL	BC
11	GENL	BC
12	GENL	BC
13	GENL	BC
14	GENL	BC
15	GENL	BC
16	GENL	BC
17	GENL	BC

	A	B	C	D	E	F	G	H	I	J	K	L	M
1	ACFOUT	Factors For: Interconnection											
2	*-Run Done With Database Vintage: 00SD02E, Dated: 02/15/01*												
3	*-Wholesale Cost Program (TELRIC) Data Base released 02/01 (00SD02E).*												
4	*-Factors loaded from Factors Model (Expense Module), Version 00V2.*												
5	*-CAPITAL RECOVERY factors released 01/01 and based on 10.14% Cost*												
6	*Of Money. No 1-10 year factors developed.*												
7	*-MAINTENANCE factors released 01/01.*												
8	*-RTU factors released 02/01.*												
9	*-AD VALOREM Tax released 01/01.*												
10	*-DIRECTLY ASSIGNED expense factors released 01/01.*												
11	*-BUSINESS FEES released 01/01.*												
12	*-COMMON Expense released 01/01.*												
13	*-TOTAL INSTALLED FACTORS (TIF) released 01/01.*												
14	*-POWER investment factors released 01/01.*												
15	*-SALES TAX released 01/01.*												
16	*-TELCO Engineering factors released 01/01.*												
17	*-INTEREST DURING CONSTRUCTION released 01/01.*												
18	*-LAND AND BUILDING factors released 01/01.*												
19	*-DIRECTLY ATTRIBUTABLE expense factors released 01/01.*												
20	*-SALES EXPENSE factor released 01/01.*												
21	*-PRODUCT MANAGEMENT factor released 01/01.*												
22	*-BILLING & COLLECTION factor released 01/01.*												
23	*-PROVISIONING factors released 01/01.*												
24	*-TELEPHONE PLANT INDEX released 01/01.*												
25	*-STRUCTURE RATIO released 01/01.*												
26													
27													
28													
29													
30													
31													
32													
33													

	A	B	C	D	E	F	G	H	I	J	K	L	M	N	O
34															
35	***State:***														
36															
37															
38	State:	South Dakota													
39															
40	**ACCOUNTS**	**DEPR-AVG**	**COM-AVG**	**IT-AVG**	**MTNC-TOT**	**ADVAL**	**BLDG**	**LAND**	**PRODMAN**	**SALESEXP**	**ADVER**	**BF**	**NTWKOP**	**NTWKST**	**GENLST**
41	20C	0.000000	0.096506	0.036495	0.022353	0.008613	0.000000	0.000000	0.025565	0.009225	0.000000	0.002025	0.040880	0.015364	0.069508
42	110C	0.025821	0.074869	0.028313	0.022353	0.008613	0.000000	0.000000	0.025565	0.009225	0.000000	0.002025	0.040880	0.015364	0.069508
43	57C	0.160932	0.045151	0.017075	0.012524	0.008613	0.053600	0.001400	0.025565	0.009225	0.000000	0.002025	0.040880	0.015364	0.069508
44	257C	0.109717	0.045455	0.017189	0.011420	0.008613	0.053600	0.001400	0.025565	0.009225	0.000000	0.002025	0.040880	0.015364	0.069508
45	357C	0.109717	0.045455	0.017189	0.032498	0.008613	0.053600	0.001400	0.025565	0.009225	0.000000	0.002025	0.040880	0.015364	0.069508
46	858C	0.131250	0.052536	0.019867	0.022759	0.008613	0.000000	0.000000	0.025565	0.009225	0.000000	0.002025	0.040880	0.015364	0.069508
47	1C	0.122572	0.036893	0.013952	0.032460	0.008613	0.000000	0.000000	0.025565	0.009225	0.000000	0.002025	0.040880	0.015364	0.069508
48	52C	0.105201	0.054376	0.020563	0.131511	0.008613	0.000000	0.000000	0.025565	0.009225	0.000000	0.002025	0.040880	0.015364	0.069508
49	42C	0.105201	0.054376	0.020563	0.131511	0.008613	0.000000	0.000000	0.025565	0.009225	0.000000	0.002025	0.040880	0.015364	0.069508
50	5C	0.090987	0.056203	0.021254	0.024153	0.008613	0.000000	0.000000	0.025565	0.009225	0.000000	0.002025	0.040880	0.015364	0.069508
51	35C	0.060902	0.057059	0.021578	0.047717	0.008613	0.000000	0.000000	0.025565	0.009225	0.000000	0.002025	0.040880	0.015364	0.069508
52	62C	0.062692	0.058372	0.022074	0.023289	0.008613	0.000000	0.000000	0.025565	0.009225	0.000000	0.002025	0.040880	0.015364	0.069508
53	45C	0.060902	0.057059	0.021578	0.047717	0.008613	0.000000	0.000000	0.025565	0.009225	0.000000	0.002025	0.040880	0.015364	0.069508
54	4C	0.021443	0.064600	0.024429	0.005558	0.008613	0.000000	0.000000	0.025565	0.009225	0.000000	0.002025	0.040880	0.015364	0.069508
55	3C	0.274000	0.091689	0.034674	0.010002	0.008613	0.000000	0.000000	0.025565	0.009225	0.000000	0.002025	0.040880	0.015364	0.069508

	P	Q	R	S	T	U	V	W	X	Y	Z	AA	AB	AC
34														
35														
36														
37														
38														
39														
40	COMPTR	UNCOLL	ACCNT	HREXP	INTAN	EXEC	PLAN	EXTERN	INFOR	LEGAL	PROCR	RDEXP	GENL	BC
41	0.034714	0.000401	0.008839	0.008145	0.002091	0.007805	0.000580	0.013029	0.057009	0.006148	0.002359	0.000036	0.015212	0.004304
42	0.034714	0.000401	0.008839	0.008145	0.002091	0.007805	0.000580	0.013029	0.057009	0.006148	0.002359	0.000036	0.015212	0.004304
43	0.034714	0.000401	0.008839	0.008145	0.002091	0.007805	0.000580	0.013029	0.057009	0.006148	0.002359	0.000036	0.015212	0.004304
44	0.034714	0.000401	0.008839	0.008145	0.002091	0.007805	0.000580	0.013029	0.057009	0.006148	0.002359	0.000036	0.015212	0.004304
45	0.034714	0.000401	0.008839	0.008145	0.002091	0.007805	0.000580	0.013029	0.057009	0.006148	0.002359	0.000036	0.015212	0.004304
46	0.034714	0.000401	0.008839	0.008145	0.002091	0.007805	0.000580	0.013029	0.057009	0.006148	0.002359	0.000036	0.015212	0.004304
47	0.034714	0.000401	0.008839	0.008145	0.002091	0.007805	0.000580	0.013029	0.057009	0.006148	0.002359	0.000036	0.015212	0.004304
48	0.034714	0.000401	0.008839	0.008145	0.002091	0.007805	0.000580	0.013029	0.057009	0.006148	0.002359	0.000036	0.015212	0.004304
49	0.034714	0.000401	0.008839	0.008145	0.002091	0.007805	0.000580	0.013029	0.057009	0.006148	0.002359	0.000036	0.015212	0.004304
50	0.034714	0.000401	0.008839	0.008145	0.002091	0.007805	0.000580	0.013029	0.057009	0.006148	0.002359	0.000036	0.015212	0.004304
51	0.034714	0.000401	0.008839	0.008145	0.002091	0.007805	0.000580	0.013029	0.057009	0.006148	0.002359	0.000036	0.015212	0.004304
52	0.034714	0.000401	0.008839	0.008145	0.002091	0.007805	0.000580	0.013029	0.057009	0.006148	0.002359	0.000036	0.015212	0.004304
53	0.034714	0.000401	0.008839	0.008145	0.002091	0.007805	0.000580	0.013029	0.057009	0.006148	0.002359	0.000036	0.015212	0.004304
54	0.034714	0.000401	0.008839	0.008145	0.002091	0.007805	0.000580	0.013029	0.057009	0.006148	0.002359	0.000036	0.015212	0.004304
55	0.034714	0.000401	0.008839	0.008145	0.002091	0.007805	0.000580	0.013029	0.057009	0.006148	0.002359	0.000036	0.015212	0.004304

CONFIDENTIAL

[1]

South Dakota Public Utilities Commission
Docket No. TC 01_____
Qwest Corporation

Attachment 15

Study No. 5360
ICNAM

South Dakota Public Utilities Commission
Docket No. TC 01_____
Qwest Corporation

Attachment 16

Study No. 5355
Category 11

CONFIDENTIAL

[2]

EXECUTIVE SUMMARY
CRIS CUSTOMER BILLING AND COLLECTION
2001 RECURRING COST STUDY
CATEGORY 11

SOUTH DAKOTA

JUNE 2001

STUDY ID 5355

READ ME FILE

CATEGORY 11

SOUTH DAKOTA SGAT, JUNE 2001

STUDY #5355

Models Used In This Study

Wholesale Cost Program – Version 2.07
Cost Factors Model (TELRIC) – 00V2

Files and/or Workbooks In This Study

Category 11, June.DOC = Document that includes the title page, read me file, table of contents, and executive summary.

Category 11, June. XLS = Workbook that contains the calculation of the unit cost and input source data. [Tabs: Study Summary, WINPC3 Output (cost results), Total Product Costs, Investment Cost Calc, WINPC3 Investments, WINPC3 Parameters, WINPC3 ACF Inputs, WINPC3 ACF Outputs, Data Transmission-CMDS, Toll Data Entry, and Cat 11 labor]

To Generate The Cost Results Found In This Study

Values from the **"Data Transmission-CMDS", "Toll Data Entry", "Cat 11 Labor" tabs** within Category 11, June.XLS must be input into the **"WINPC3 Investments" tab** of Category 11, June.XLS.

These inputs flow through to produce the costs found on the **"WINPC3 Output" tab**. (Note: State name must remain the same otherwise the Wholesale Cost Program must be rerun.

TABLE OF CONTENTS

	PAGE
SECTION A – STUDY OUTPUT	
EXECUTIVE SUMMARY	1
STUDY SUMMARY	3
COST SUMMARY – WINPC3 OUTPUT	4
TOTAL PRODUCT COSTS	5
INVESTMENT COST CALCULATIONS	6
SECTION B – COST CALCULATIONS	
WINPC3 INVESTMENTS	7
WINPC3 PARAMETERS	8
WINPC3 ACF INPUTS	9
WINPC3 ACF OUTPUTS	10
SECTION C – SOURCE DATA	
DATA TRANSMISSION-CMDS	13
TOLL DATA ENTRY	14
CAT 11 LABOR	15

A. PURPOSE, SCOPE, AND APPLICATION

The purpose of this study is to identify the 2001 Category 11 cost per record. The cost estimates developed herein are appropriate to QWEST operations.

B. DESCRIPTION OF ELEMENTS AND SERVICES

Category 11 Records are Exchange Message Records (EMR) which provide mechanized record formats that can be used to exchange access usage information between QWEST and CO-PROVIDER.

C. STUDY METHODOLOGY

The methodology used in this study is to identify the data transmission costs, assembly and editing, and labor costs associated with Category 11 Records.

Appropriate cost factors were then applied to develop the total cost per unit.

D. DESCRIPTION OF TOTAL ELEMENT LONG RUN INCREMENTAL COSTS

The QWEST incremental format disaggregates the cost results on a unitized basis, into the following components:

Total Direct Costs are the forward-looking costs that are caused by offering the network element in the long run. These costs would not be incurred if the network elements were not offered. Total Direct Costs reflect the per-unit forward looking cost associated with providing the entire network element in the most efficient manner, holding constant the production of all other network elements produced by the firm. For recurring element costs Total Direct Costs include the capital costs (e.g., depreciation, return, taxes) and maintenance costs associated with the investment required to provision a network element, along with other network element-specific costs such as product management expense. For nonrecurring costs, Total Direct Costs include the labor-related expenses associated with the provision of a network element, along with other network element-specific costs such as product management expense.

Directly Attributable Costs include network administration and engineering costs and various administrative costs such as the cost of general-purpose computers and accounting and finance expenses. These costs are not directly associated with a specific network element. However, these costs vary with the provision of all network elements, and are not common to the entire firm.

Total Element Long Run Incremental Costs (TELRIC) represent the sum of Total Direct Costs and Directly Attributable Costs. This measure of costs includes the forward looking costs incurred in the provision of a network element. This measure of costs is consistent with TELRIC as defined by the FCC.

Common Costs are associated with the enterprise as a whole. These costs do vary based on total size of the firm, but do not vary with the provisioning of individual network elements. These costs are avoidable only with the elimination of the entire firm, and are sometimes referred to as *general overhead costs*.

Fully Allocated Costs represent the sum of Total Element Long Run Incremental Cost plus Common Costs (TELRIC + CC).

E. STUDY ASSUMPTIONS

1. In this cost study, QWEST has not used the economic depreciation lives (and/or cost ot money) that it advocates. QWEST does not advocate the depreciation (and/or cost of money) used in this study, nor does it believe that they are appropriate inputs for its cost studies beyond the scope of this application.

F. Study Summary

Study Name	*2001 CATEGORY 11*	
Study Requester		
Type of Study	*TELRIC*	
Study ID	*5355*	
Cost Factor Group	*Interconnection*	
Study Applications		
Completion Date	*June 25, 2001*	
Cost Analyst	*D. L. Taylor*	
Study Review	**Reviewer**	**Date**
		June 25, 2001
Models Used	**Model**	**Version**
	Wholesale Cost Program	*2.07*
	Cost Factor Databases	*00SD02E*
	Cost Factors Model (TELRIC)	*00V2*
Cost Factors Used	**Factor**	**Effective Date**
	Capital Recovery	*01/01*
	Maintenance	*01/01*
	Ad Valorem	*01/01*
	COE Land & Bldg	*01/01*
	Directly Assigned Factors	*01/01*
	Directly Attributable Factors	*01/01*
	Common	*01/01*
	Cost Of Money	*10.14%*
Inflation		
Major Cost Drivers		

Parameter File: H:\SLHILL-Team\B&C\STUDIES\category 11\SD SGAT, June 2001\Category 11, June.xls, Sheet "WINPC3 Parameters"
State(s): SD
Database Vintage: 00SD02E
Factors For: Interconnection
Report Type: ICM Format
Decimal Places: 6
Costs Format: Monthly
Group Totals: Yes
ACF Input: H:\SLHILL-Team\B&C\STUDIES\category 11\SD SGAT, June 2001\Category 11, June.xls, Sheet "WINPC3 ACF Inputs"
ACF Output: H:\SLHILL-Team\B&C\STUDIES\category 11\SD SGAT, June 2001\Category 11, June.xls, Sheet "WINPC3 ACF Outputs"
Investment: H:\SLHILL-Team\B&C\STUDIES\category 11\SD SGAT, June 2001\Category 11, June.xls, Sheet "WINPC3 Investments"
Output: H:\SLHILL-Team\B&C\STUDIES\category 11\SD SGAT, June 2001\Category 11, June.xls, Sheet "WINPC3 Output"

State: South Dakota

Description	USOC	Loaded Investment	Direct Expense	Total Direct	Network Support	Directly Attributed	TELRIC	Common	TELRIC + Common
Category 11 Mechanized Record Change per Record		$0.000002	$0.001318	$0.001367	$0.000077	$0.000324	$0.001690	$0.000076	$0.001767

	6/25/01 4:05 PM			
Row	South Dakota	Source or Calculation	Factor Value	Category 11 Mechanized Record Change per Record
			A	B
1	**Investment**	sl r"Total" cD		0.000002
2				
3	***Investment Based Costs***	***sl r"Total" cK***		0.000000
4				
5	Direct Expenses			0.001318
6	Miscellaneous Expenses			0.000000
7	Billing & Collection - PL			0.000000
8	***Investment Based + Direct Costs***			0.001318
9				
10	***Directly Assigned***			
11	Product Management Expense	cA*(r8-r6)	0.025565	0.000034
12	Sales Expense	cA*(r8-r6)	0.009225	0.000012
13	Product Advertising Expense	cA*(r8-r6)	0.000000	0.000000
14	Business Fees (Other Operating Taxes)	cA*(Sum(r8:r13)-r6)	0.002025	0.000003
15	***Directly Assigned Costs***	***Sum r11:r14***		0.000049
16				
17	***Total Direct Costs***	***r8 + r15***		0.001367
18				
19	***Directly Attributed***			
20	Network Operations	cA*(r17-r6)	0.040880	0.000056
21	Network Support Assets	cA*(r17-r6)	0.015364	0.000021
22	General Support Assets	cA*(r17-r6)	0.069508	0.000095
23	General Purpose Computers	cA*(r17-r6)	0.034714	0.000047
24	Uncollectible	cA*(r17-r6)	0.000401	0.000001
25	Accounting & Finance Expense	cA*(r17-r6)	0.008839	0.000012
26	Human Resources Expense	cA*(r17-r6)	0.008145	0.000011
27	Information Management Expense	cA*(r17-r6)	0.057009	0.000078
28	Intangibles	cA*(r17-r6)	0.002091	0.000003
29	***Directly Attributed Costs***	***Sum r20:r28***		0.000324
30				
31	***TELRIC***	***r17 + r29***		0.001690
32				
33	***Common***			
34	Executive Expense	cA*(r31-r6)	0.007805	0.000013
35	Planning Expense	cA*(r31-r6)	0.000580	0.000001
36	External Relations Expense	cA*(r31-r6)	0.013029	0.000022
37	Legal Expense	cA*(r31-r6)	0.006148	0.000010
38	Other Procurement Expense	cA*(r31-r6)	0.002359	0.000004
39	Research & Development Expense	cA*(r31-r6)	0.000036	0.000000
40	Other General and Admin Expense	cA*(r31-r6)	0.015212	0.000026
41	***Common Costs***	***Sum r34:r40***		0.000076
42				
43	***TELRIC + Common Costs***	***r31 + r41***		0.001767

6/25/01
South Dakota

2001 CATEGORY 11

Category 11 Mechanized Record Change per Record

Acct	FRC	Account Name	Investment	Depreciation	Cost Of Money	Income Tax	Ad Valorem	Maintenance	Switch RTU	Total Capital Costs
2124	2124	General Purpose Computers	0.000002	0.000000	0.000000	0.000000	0.000000	0.000000	0.000000	0.000000
		Total	**0.000002**	**0.000000**	**0.000000**	**0.000000**	**0.000000**	**0.000000**	**0.000000**	**0.000000**

	A	B	C	D	E	F	G
1	Investment						
2	STUDY	2001 CATEGORY 11					
3	DATE	5/4/00					
4	GROUP	Category 11 Mechanized Record Change per Record					
5	COMMON	SD	0.000429				2000 Data Transmission - CMDS
6	LOADED	SD	0.000002			2124	2000 Toll Data Entry (Assembly and Editing) Investment
7	COMMON	SD	0.000004				2000 Toll Data Entry (Assembly and Editing) Expense
8	COMMON	SD	0.000885				2001 Labor - Category 11

	A	B
1	Parameter	
2	SD	
3	7	
4	6	
5	Monthly	12
6	Yes	
7	No	
8		
9	11	
10	5355	

	A	B	C	D	E	F	G	H	I	J	K	L	M	N	O	P	Q	R	S	T	U	V	W	X	Y	Z	AA	AB
1	ACFIN																											
2	00SD02E																											
3	2124	DEPR-AVG	COM-AVG	IT-AVG	MTNC-TOT	ADVAL	BLDG	LAND	PRODMAN	SALESEXP	ADVER	BF	NTWKOP	NTWKST	GENLST	COMPTR	UNCOLL	ACCNT	HREXP	INTAN	EXEC	PLAN	EXTERN	INFOR	LEGAL	PROCR	RDEXP	GENL

	A	B	C	D	E	F	G	H	I	J	K	L	M
1	ACFOUT	Factors For: Interconnection											
2	*-Run Done With Database Vintage: 00SD02E, Dated: 02/15/01*												
3	*-Wholesale Cost Program (TELRIC) Data Base released 02/01 (00SD02E).*												
4	*-Factors loaded from Factors Model (Expense Module), Version 00V2.*												
5	*-CAPITAL RECOVERY factors released 01/01 and based on 10.14% Cost*												
6	*Of Money. No 1-10 year factors developed.*												
7	*-MAINTENANCE factors released 01/01.*												
8	*-RTU factors released 02/01.*												
9	*-AD VALOREM Tax released 01/01.*												
10	*-DIRECTLY ASSIGNED expense factors released 01/01.*												
11	*-BUSINESS FEES released 01/01.*												
12	*-COMMON Expense released 01/01.*												
13	*-TOTAL INSTALLED FACTORS (TIF) released 01/01.*												
14	*-POWER investment factors released 01/01.*												
15	*-SALES TAX released 01/01.*												
16	*-TELCO Engineering factors released 01/01.*												
17	*-INTEREST DURING CONSTRUCTION released 01/01.*												
18	*-LAND AND BUILDING factors released 01/01.*												
19	*-DIRECTLY ATTRIBUTABLE expense factors released 01/01.*												
20	*-SALES EXPENSE factor released 01/01.*												
21	*-PRODUCT MANAGEMENT factor released 01/01.*												
22	*-BILLING & COLLECTION factor released 01/01.*												
23	*-PROVISIONING factors released 01/01.*												
24	*-TELEPHONE PLANT INDEX released 01/01.*												
25	*-STRUCTURE RATIO released 01/01.*												
26													
27													
28													
29													
30													
31	*State:*												
32													
33	*ACCOUNTS*												

	A	B	C	D	E	F	G	H	I	J	K	L	M	N	O
34	***2124***														
35															
36															
37															
38	State:	South Dakota													
39															
40	**ACCOUNTS**	**DEPR-AVG**	**COM-AVG**	**IT-AVG**	**MTNC-TOT**	**ADVAL**	**BLDG**	**LAND**	**PRODMAN**	**SALESEXP**	**ADVER**	**BF**	**NTWKOP**	**NTWKST**	**GENLST**
41	2124	0.164850	0.047620	0.018008	0.000000	0.008613	0.000000	0.000000	0.025565	0.009225	0.000000	0.002025	0.040880	0.015364	0.069508

	P	Q	R	S	T	U	V	W	X	Y	Z	AA	AB
34													
35													
36													
37													
38													
39													
40	COMPTR	UNCOLL	ACCNT	HREXP	INTAN	EXEC	PLAN	EXTERN	INFOR	LEGAL	PROCR	RDEXP	GENL
41	0.034714	0.000401	0.008839	0.008145	0.002091	0.007805	0.000580	0.013029	0.057009	0.006148	0.002359	0.000036	0.015212

Centralized Message Data System-I(CMDS-I)

CMDS Processing and IS-NET Transport

Study year	**2000**					
CPI Inflation factor	1	*Tab 7 Page 1*		Volume	Service	Shared
		Row 28		Sensitive	Specific	Residual
Description	Reference				Fixed	
CMDS Processing Support						
cost per message	*Tab 27*	*Page 2*		$0.000184		
IS-NET costs per CMDS message	*Tab 27*	*Page 2*	$116,812			
CMDS messages	*Tab 21*	*Page 8 : B156*	272,137,462			
IS-NET costs per CMDS message		*D11/D12*		***$0.000429***		
Total CMDS-I processing and IS-NET per CMDS-I message			*row 9+row 14*B6*	$0.000613	$0.000000	$0.000000

	A	B	C	D	E	F	G	H	I	J	K
1											
2											
3											
4	CRIS CDP summary					Volume	Service	Shared			
5	2000 Study year					Sensitive	Specific	Residual		Page, row,	
6						Processing	Fixed			& column	
7					Reference						
8					Tab 22	**INV**		**EXP**			
9	**Toll data entry**			seconds per message	0.000099	***$0.000002***		***$0.000004***			
10	Toll data entry			CDP - per message		$0.000000		$0.000000		E53 * row 18 or 19	
11											
12	Toll message rating			seconds per message	0.000155	$0.000003		$0.000006			
13	Toll message rating			CDP - per message		$0.000000		$0.000000		E56 * row 18 or 19	
14											
15	Toll masterfile processing			seconds per message	0.000156	$0.000003		$0.000006			
16	Toll masterfile processing			CDP - per message		$0.000000		$0.000000		E59 * row 18 or 19	
17											
18	Account processing			seconds per account	0.000598	$0.000011		$0.000023			
19	Account processing			CDP - per account		$0.000000		$0.000000		E62 * row 18 or 19	
20											
21	Customer billing - per account			seconds per account	0.004188	$0.000077		$0.000160			
22	Customer billing - per account			CDP - per account		$0.000000		$0.000000		E65 * row 18 or 19	
23											
24	Customer billing - per message			seconds per message	0.000381	$0.000007		$0.000015			
25	Customer billing - per message			CDP - per message		$0.000000		$0.000000		E68 * row 18 or 19	
26											
27	Treatment outputs			seconds per account	0.271709	$0.004969		$0.010392			
28	Treatment outputs			CDP - per account		$0.000000		$0.000000		E71 * row 18 or 19	
29											
30	Remittance			seconds per account	0.000981	$0.000018		$0.000038			
31	Remittance			CDP - per account		$0.000000		$0.000000		E74 * row 18 or 19	
32											
33	Local message processing			seconds per message	0.001087	$0.000020		$0.000042			
34	Local message processing			CDP - per message		$0.000000		$0.000000		E77 * row 18 or 19	
35											
36	WATS processing			seconds per message	0.001207	$0.000022		$0.000046			
37	WATS processing			CDP - per message		$0.000000		$0.000000		E80 * row 18 or 19	
38											
39	CMDS processing			seconds per message	0.000313	$0.000006		$0.000012			
40	CMDS processing			CDP - per message		$0.000000		$0.000000		E83 * row 18 or 19	

CATEGORY 11 - 2001 COSTS

TELRIC

	2000 Time - Mins	Labor Rate - Mins	Customers - Yr	Total $
Management Time	60	$1.008167	30	$1,814.70
Occupational Time	13	$0.623333	30	$243.10
Occupational Time	5	$0.623333	3600	$11,220.00
TOTAL				$13,277.80
RECORDS				15,000,000
COST PER RECORD				***$0.000885***

Management - Check request, update spreadsheets, send data, table work. 2000 Hourly Labor Rate, Acct. 6724.1.

Occupational - Table work, updating billing records. 2000 Hourly Labor Rate, Acct. 6623.2.

Source: Product Manager.