TC 98-184

LC 98-104
RECEIVED
OCT 08 1998
SOUTH DAKOTA PUBLIC UTILITIES COMMISSION

BEFORE THE PUBLIC UTILITIES COMMISSION
OF THE STATE OF SOUTH DAKOTA
500 E Capitol, State Capitol Building, Pierre SD 57501

COMPLAINT

Complainant(s): (Persons filing the complaint)		Respondent(s): (Persons or Company complained against)	
Name	JoAnn C Mvs Clifford	Contact Person	?
Address	H.C. 14 Box 37A Klein Valentine NE 69201	Company	U.S. West Communications
City, State, Zip	Toddy Resident	Address	P.O. Box 9301
Home Phone	605-378-3851	City, State, Zip	Des Moines, IA 50306-9301
Work Phone		Work Phone	1/800 224-1111 (Billing + Service)
Cellular Phone		Cellular Phone	
Fax #		Fax #	

If the Complainant is represented by an attorney, please list the attorney's name, address, telephone number and fax number below: (If Complainant is not represented by an attorney, please leave blank.)

These are the facts giving rise to my complaint:

Phone problems, the cause of which has not been satisfactorily resolved - see attached typed papers - 2 sheets

NOTE: Please attach additional pages, if necessary, to explain your situation. Also enclose copies of any bills or o which may pertain to your complaint.

EXHIBIT
3

J. Klein, p.1.

Monday, October 5, 1998
To Public Utility Commission:
From Jo Ann K. Klein
Re: problems with our telephone--US West (605-378-3851)

My husband, Clifford, and I live in Todd County SD. Our mail and phone service come out of Valentine, NE. We are both in our 70's and elected to spend our retirement in our home on the ranch. Major factors in this decision were the love of our land, the nearness of our son Milton and his family, and dependable REA and phone service.

Both Clifford and I have had major medical problems and it is essential that we have access to emergency help. Our son, Milton and his family, live fairly close to us but to alert him to our needs we we need dependable phone service.

Our phone service this year has been anything but dependable. Milton's phone has experienced problems similar to ours and at the same times. Had we known that phone outages would be so frequent and we would have to resort to your Commission for help, we would have logged each event. The phone service's record of calls for service from our phone number do not reflect the total number of service calls as many calls were made by Milton's wife, Sheryl, from her work station. When their phone was out, ours were too.

Two recent episodes are typical of the problems that have occurred.

On Friday evening, Sept. 25, 1998 we had a light rain shower. At 4:30 AM Saturday the 26th I was awakened by a low level ringing of our phone. I answered. No one was on the line. Back to sleep until 5:30 brought another ringing. Upon answering I heard, "I'm sorry but your call cannot be completed as dialed. Please hang up and dial again."

I gave up trying to sleep. Every 5 minutes there was a pinging noise which I tried to ignore. At 8:30 AM I made a long distance call which was satisfactory. At 8:50 I heard a long ringing--no one on the line. At 9:00 AM I heard a chopping ringing-- no one on the line. We tried to make a call out but the line was dead.

Sunday, Sept 27, at 1:00 AM, I was awakened by a single loud ring, but no one was on the line. This was repeated again every 5 min. I covered the phone with a pillow and tried to sleep with little success. About 7:00 AM Clifford answered the phone and heard the message, "US West. This is ------. How may I help you?" The line then went dead before Cliff could reply. Later there was a normal sounding ring, yet when the phone was picked up the line was dead. By 11:00 AM the pesky "tweety bird" ringing had stopped and the phone seemed to be working again. Our son who lives in Texas, and calls every week, got through to us Sunday afternoon and said he had tried all morning to reach us with no luck.

I estimate that this past year we have had at least two outages a month. They occur most frequently when it rains or snows or there is snow melting. At times the phone is dead and at other times we have been unable to call out. We have had long distance calls both in and out cut off.

We have experienced static so bad we could not understand the caller or they us. Our son, Milton, on whom we rely to assist us and come to our rescue when needed, has also had many phone problems similar to ours. Each time we have been out of service for at least two days. Repairmen have told us, "The problem is with the box, five miles south of you by Lonoors-- The problem is with the box a mile south of you--"The problem is with the box just north of you. The problem is with the line coming into your place from the north." After making a number of calls to US West, on October 1st a repairman, and his supervisor spent an afternoon working on our (Milton Klein and Clifford Klein) lines. The repairman returned on Friday the 2nd and spent all day working. He called late Friday afternoon and said he thought he had found and fixed our problem. A connection, instead of having a cap, had a plastic sack, similar to a Safeway bag wrapped around it. When it rained, moisture apparently leaked in. He asked me to call him at his phone number on Monday and tell me how things went this past weekend.

We heard strange "pinging noises" early Saturday, October 3. Our Son called from Texas Sat. morning and the connection was good. However by noon, the phone had started it's funny business again and most of the time it was DEAD. We were unable to call our or receive calls.

For us, this situation is <u>critical</u>. Our anxiety level is high! We have come to feel that it is not safe for us to continue to live in our home on our ranch not knowing when we will again be out of phone service. Are we going to have to give up our rural home and relocate somewhere else simply because we do not have reliable phone service? Continuation of phone outages may force us to do just that in order to insure our safety and welfare.

What we wish from the phone company is that the causes of our phone problems be found and if necessary the sections of line causing our trouble be replaced <u>without</u> delay. I also think that we should receive credit on our phone bill for those days when we did not have service, or the service was sporadic.

Jo Ann Klein (Mrs Clifford Klein)
RC14 HC 37A
(605 378 3851)
Valentine, NE 69201
(Legal residents of Todd County, S.D.)

RECEIVED
OCT 14 1998
SOUTH DAKOTA PUBLIC
UTILITIES COMMISSION

Saturday, October 10
To: Public Utility Commission
From: Jo Ann K. Klein
Re: problems with our phone--U.S. West (605-378-3851)

Our September billing from AT&T--US West arrived today. A copy of the billing is attached. I would like the billing and this letter to be added to the protest papers mailed to you earlier this week.

Please note the 24 calls for directory assistance billed to us. All of these calls were "phantom" as is item 17 on September 28 for a call to Grandprarie, Texas. No one in our household made these calls!. They were undoubtedly recorded erroneously during days when our phone line was acting up.

Also note calls on p 2.

In addition to the inconvenience of getting this deleted from our bill, I expect to get the usual run-around when I call the billing office.

I'll let you know how that turns out.

Thank you,

Jo Ann K. Klein (Mrs Clifford Klein)

Jo Ann K. Klein (Mrs Clifford Klein)
HC 14 Box 37 A
Valentine, Ne 69201 (Resident of Todd Cty SD)

TC98-184

DOCKET NO. TC98-184

In the Matter of IN THE MATTER OF THE COMPLAINT FILED BY JOANN KLEIN, VALENTINE, NEBRASKA, AGAINST U S WEST COMMUNICATIONS, INC. REGARDING POOR SERVICE AND REQUEST TO HAVE LINES UPDATED

Public Utilities Commission of the State of South Dakota

DATE	MEMORANDA
10/6 98	Received;
10/16 98	Docketed;
10/16 98	Docket Filing;
11/9 98	Order Finding Probable Cause and Notice Requiring Answer;
11/12 98	Answer to Complaint and Certificate of Service;
11/13 98	Order for and Notice of Hearing;
1/29 99	Staff Hearing Brief;
2/3 99	Transcript of Hearing Held on 2/3/99
2/16 99	US West's Brief;
2/19 99	Supplement to Staff Hearing Brief;
2/22 99	Order Setting Deadline;
3/1 99	US West's Motion to Extend Deadline;
3/1 99	Affidavit of Edward A Peters in Support of US West's Motion to Extend Deadline;
3/5 99	Letter " " " " " " " "
3/5 99	Order Granting Extension of Deadline;
9/7 99	Order for and Notice of Hearing;
11/4 99	Transcript of Hearing Held on 11/4/99;
12/21 99	Order Keeping Docket Open;
2/15 01	Order Closing Docket;
2/15 01	Docket Closed.

BOYCE, MURPHY, McDOWELL & GREENFIELD, L.L.P.

ATTORNEYS AT LAW

[illegible]

Norwest Center, Suite 600
101 North Phillips Avenue
Sioux Falls, South Dakota 57104
P.O. Box 5015
Sioux Falls, South Dakota 57117-5015

Telephone 605 336-2424
Facsimile 605 334-0618

Of Counsel
John R. McDowell

J.W. Boyce (1884-1915)
John S. Murphy (1924-1966)

November 30, 1998

William Bullard, Executive Director
Public Utilities Commission
State Capitol Building
500 East Capitol Avenue
Pierre, SD 57501

VIA FACSIMILE – 773-3809

Re: In the Matter of the Complaint Filed by Mrs. Clifford (JoAnn) Klein, Valentine, Nebraska, against U S WEST Communications, Inc. Regarding Poor Service and a Request to Have Lines Updated (TC 98-184)

Dear Bill:

Enclosed please find the Answer to Complaint and Certificate of Service in the above referenced file. The original and ten (10) copies are being mailed to you today.

Sincerely yours,

BOYCE, MURPHY, MCDOWELL
& GREENFIELD, L.L.P.

Thomas J. Welk

TJW:vd
Enclosure
cc: Colleen Sevold (w/enc.)
Jim Gallegos (w/enc.)
Joann Klein (w/enc.)

BEFORE THE PUBLIC UTILITIES COMMISSION
OF THE STATE OF SOUTH DAKOTA

IN THE MATTER OF THE COMPLAINT FILED BY MRS. CLIFFORD (JOANN) KLEIN, VALENTINE, NEBRASKA, AGAINST U S WEST COMMUNICATIONS, INC. REGARDING POOR SERVICE AND A REQUEST TO HAVE LINE UPDATED	**TC 98-184** **ANSWER TO COMPLAINT AND CERTIFICATE OF SERVICE**

Pursuant to the November 9, 1998 Order of the Public Utilities Commission ("Commission") in this docket, received on November 12, 1998, and pursuant to ARSD 20:10:01:11.01 U S WEST Communications, Inc. ("U S WEST") provides the following Answer to the Complaint in this matter:

1. U S WEST admits, as alleged in the Complaint of Clifford and JoAnn Klein of Valentine, Nebraska ("Customer") that the Customer has experienced certain outages of telephone and that at certain times such outages were reported to U S WEST. To its best knowledge and belief, U S WEST responded to all trouble reports.

2. This customer is served out of the Valentine, Nebraska office.

3. The U S WEST technicians in Nebraska have done extensive work on this system to provide the Klein's good voice grade service.

4. U S WEST has credited and will credit the Customer for any days the Customer was out of service.

5. In regard to any damages suffered by the Customer as alleged in the Complaint, such damages, if any, are limited by the applicable tariff which has been filed and approved by the Commission, which is attached hereto as Exhibit A. In addition, in the extent that such damages alleged by the Customer are not limited by the tariff, U S WEST remits the Customer to prove any damages sustained.

DATED this 30th day of November, 1998.

Thomas J. Welk
BOYCE, MURPHY, McDOWELL &
GREENFIELD, L.L.P.
101 North Phillips Avenue, Suite 600
P. O. Box 5015
Sioux Falls, SD 57117-5015
(605) 336-2424

Attorneys for U S WEST Communications, Inc.

CERTIFICATE OF SERVICE

I, Thomas J. Welk, do hereby certify that I am a member of the law firm of Boyce, Murphy, McDowell & Greenfield, L.L.P., and on the 30th day of November, 1998, a true and correct copy of U S WEST's Answer to Complaint was sent via US mail, postage prepaid, to the following address:

Clifford and JoAnn Klein
HC 14, Box 37A
Valentine, NE 69201

Thomas J. Welk

2. GENERAL REGULATIONS - CONDITIONS OF OFFERING

2.4 LIABILITY OF THE COMPANY

2.4.1 SERVICE LIABILITIES

A. Limitations

1. The Company's liability, if any, for its willful misconduct is not limited by this Tariff. With respect to any other claim or suit, by a customer or by any others, for damages associated with the installation, provision, preemption, termination, maintenance, repair, or restoration of service, the Company's liability, if any, shall not exceed an amount equal to the proportionate part of the monthly recurring charge for the service for the period during which the service was affected. This liability shall be in addition to any amounts that may otherwise be due the customer under this Tariff as an allowance for interruptions.

2. The services furnished by the Company, in addition to the limitations set forth preceding, also are subject to the following limitation: The Company shall not be liable for damage arising out of mistakes, omissions, interruptions, delays, errors or defects in transmission or other injury, including but not limited to injuries to persons or property from voltages or currents transmitted over the service of the Company caused by Customer-provided equipment (except where a contributing cause is the malfunctioning of a Company-provided connecting arrangement, in which event the liability of the Company shall not exceed an amount equal to a proportional amount of the Company billing for the period of service during which such mistake, omission, interruption, delay, error, defect in transmission or injury occurs).

3. The customer indemnifies and saves the Company harmless against claims for libel, slander, infringement of copyright arising from the use of material transmitted over its facilities, or infringement of patents arising from combining with or using in connection with, facilities of the Company, apparatus or systems of the customer; and against all other claims arising out of any act or omission of the customer in connection with facilities provided by the Company.

4. Calling Privileges

Company tariffs govern and fix the outgoing service of customers and in no manner guarantees to them the same incoming service. All incoming service of a customer depends upon and is limited by the right of a calling customer to such service.

EXHIBIT
A

South Dakota Public Utilities Commission

WEEKLY FILINGS

For the Period of October 16, 1998 through October 22, 1998

If you need a complete copy of a filing faxed, overnight expressed, or mailed to you, please contact Delaine Kolbo within five business days of this filing.
Phone: 605-773-3705. Fax: 605-773-3809.

GAS AND ELECTRIC

GE98-003 In the Matter of Application of Northwestern Public Service for approval of Revisions to its Natural Gas and Electric Tariff concerning modification of its customer bill.

Application by Northwestern Public Service to revise its natural gas and electric tariff to incorporate changes to its customer bill. Northwestern Public Service has proposed to replace the logo on their customer bills with the new logo recently adopted. Minor wording changes on the bills have also been proposed in order to facilitate customer understanding of the bill.

Staff Attorney: Karen Cremer
Staff Analyst: Dave Jacobson
Date Filed: 10/22/98
Intervention Deadline NA

TELECOMMUNICATIONS

TC98-183 In the Matter of the Complaint filed by Sheryl L. Klein, Valentine, Nebraska, against U S West Communications, Inc. Regarding Poor Service and Request To Have Lines Updated.

Complaint by Sheryl L. Klein vs. U S West Communications, Inc. The Complainant outlines a series of service outages, repair difficulties, outdated service and staffing issues. The Complainant seeks the following relief: "We want the line fixed completely and permanently, so it functions at a 100% reliable level. We want this done now, before another winter sets in. We have been told several possible problems by U S West repairmen including aging lines and old systems. We do not know what the solution is, but want it found and implemented now. We ask that U S West be required to make whatever investment is necessary to fully remedy the problem. We also want to be reimbursed for a reasonable amount for the loss of phone service and the associated stress and hassles. We request $500.00.

Staff Attorney: Camron Hoseck
Consumer Affairs: Leni Healy
Date Filed: 10-08-98
Intervention Deadline: N/A

TC98-184 In the Matter of the Complaint filed by JoAnn C. Klein, Valentine, Nebraska, against U S West Communications, Inc. Regarding Poor Service and Request To Have Lines Updated.

Complaint by JoAnn C. Klein vs. U S West Communications, Inc. The Complainant outlines a series of service outages, repair difficulties, outdated service, phantom calls, and staffing issues. The Complainant seeks the following relief: "contact U S West and insist that our long continuation of poor service and outages be corrected. Also reimbursement or credit for days when phone lines have been out." Mrs. Klein also requests that her billing for 24 directory assistance calls and long distance calls which were not made by the Kleins be credited from their billing.

Staff Attorney: Camron Hoseck
Consumer Affairs: Leni Healy
Date Filed 10-08-98
Intervention Deadline: N/A

TC98-185 In the Matter of the Application of EQuality, Inc., for a Certificate of Authority to Provide Telecommunications Services in South Dakota.

Application of EQuality Inc. for a certificate of authority to provide intrastate telecommunications services in the state of South Dakota. EQuality proposes to offer 1+, 800 and travel card service.

Staff Attorney: Karen Cremer
Staff Analyst: Harlan Best
Date Filed: 10/19/98
Intervention Deadline: 11/06/98

You may receive this listing and other PUC publications via our website or via internet e-mail. You may subscribe to the PUC mailing list at http://www.state.sd.us/state/executive/puc/puc.htm

BEFORE THE PUBLIC UTILITIES COMMISSION OF THE STATE OF SOUTH DAKOTA

IN THE MATTER OF THE COMPLAINT FILED BY MRS. CLIFFORD (JOANN) KLEIN, VALENTINE, NEBRASKA, AGAINST U S WEST COMMUNICATIONS, INC. REGARDING POOR SERVICE AND A REQUEST TO HAVE LINES UPDATED	))))))	ORDER FINDING PROBABLE CAUSE AND NOTICE REQUIRING ANSWER TC98-184

On October 8, 1998, the Public Utilities Commission (Commission) received a complaint filed by Mrs. Clifford (JoAnn) Klein, Valentine, Nebraska (Complainant), against U S WEST Communications, Inc. (U S WEST) regarding poor service. Complainant outlines a series of service outages, repair difficulties, outdated service, phantom calls, and staffing issues. Complainant also requested adjustment to her U S WEST bill for services not used and long distances calls not made by her.

Pursuant to ARSD 20:10:01:08.01 and 20:10:01:09, if a complaint cannot be settled without formal action, the Commission shall determine if the complaint shows probable cause of an unlawful or unreasonable act, rate, practice or omission to go forward with the complaint.

On November 3, 1998, at a duly noticed meeting, Complainant explained her complaint to the Commission. A representative of U S WEST explained its position stating that the complaint should be dismissed as repairs had been made and billing adjustments entered. Commission Staff recommended a finding of probable cause due to unresolved factual issues.

The Commission finds that it has jurisdiction over this matter pursuant to SDCL 49-13-1, 49-13-4, 49-13-13, 49-13-14.1, 49-31-3, 49-31-7, 49-31-7.1, 49-31-11, 49-31-60 through 49-31-68, inclusive, and ARSD 20:10:01:08.01 and 20:10:01:09. The Commission voted unanimously to find probable cause. It is therefore

ORDERED, that pursuant to ARSD 20:10:01:09, the Commission finds that there is probable cause of an unlawful or unreasonable act, rate, practice, or omission and that the complaint shall be forwarded to U S WEST and U S WEST shall file with the Commission its answer in writing within twenty (20) days of service of this order.

Dated at Pierre, South Dakota, this 9th day of November, 1998.

CERTIFICATE OF SERVICE

The undersigned hereby certifies that this document has been served today upon all parties of record in this docket, as listed on the docket service list, by facsimile or by first class mail, in properly addressed envelopes, with charges prepaid thereon.

By: Delaine Kolbo

Date: 11/10/98

(OFFICIAL SEAL)

BY ORDER OF THE COMMISSION:

James A. Burg
JAMES A. BURG, Chairman

Pam Nelson
PAM NELSON, Commissioner

Laska Schoenfelder
LASKA SCHOENFELDER, Commissioner

BEFORE THE PUBLIC UTILITIES COMMISSION OF THE STATE OF SOUTH DAKOTA

IN THE MATTER OF THE COMPLAINT FILED BY MRS. CLIFFORD (JOANN) KLEIN, VALENTINE, NEBRASKA, AGAINST U S WEST COMMUNICATIONS, INC. REGARDING POOR SERVICE AND A REQUEST TO HAVE LINES UPDATED	))))))	ORDER FOR AND NOTICE OF HEARING TC98-184

On October 8, 1998, the Public Utilities Commission (Commission) received a complaint filed by Mrs. Clifford (JoAnn) Klein, Valentine, Nebraska (Complainant), against U S WEST Communications, Inc. (U S WEST) regarding poor service. Complainant outlines a series of service outages, repair difficulties, outdated service, phantom calls, and staffing issues. Complainant also requested adjustment to her U S WEST bill for services not used and long distances calls not made by her.

Pursuant to ARSD 20:10:01:08.01 and 20:10:01:09, if a complaint cannot be settled without formal action, the Commission shall determine if the complaint shows probable cause of an unlawful or unreasonable act, rate, practice or omission to go forward with the complaint.

On November 3, 1998, at a duly noticed meeting, the Commission considered this matter. The Commission voted unanimously to find probable cause. U S WEST filed its answer on November 30, 1998.

The Commission has jurisdiction in this matter pursuant to SDCL Chapters 1-26, 49-2, 49-13, including 49-13-1 through 49-13-14, inclusive, and SDCL Chapter 49-31, including 49-31-3, 49-31-7, 49-31-7.1, 49-31-7.2, 49-31-10, 49-31-11, 49-31-38, 49-31-38.1, 49-31-38.2, 49-31-38.3, 49-31-60 through 49-31-68, inclusive, and ARSD 20:10:01:07.01 through 20:10:01:28, inclusive. The Commission may rely upon any or all of these or other laws of this state in making its determination.

A hearing shall be held on February 3, 1999, beginning at 1:30 o'clock P.M., at Cherry-Todd Electric Cooperative, West Highway 18, Mission, South Dakota. The Commission will also hear the complaints filed against U S WEST in dockets TC98-183, TC98-199, and TC98-212, since those complaints concern the same general area as this complaint. All persons testifying will be subject to cross-examination by the parties.

The issue at the hearing is whether U S WEST committed an unlawful or unreasonable act, rate, practice or omission and, if so, what relief would be appropriate.

The hearing shall be an adversary proceeding conducted pursuant to SDCL Chapter 1-26. All parties have the right to be present and to be represented by an attorney. These rights and other due process rights shall be forfeited if not exercised at

the hearing. If you or your representative fail to appear at the time and place set for the hearing, the Final Decision will be based solely on the testimony and evidence provided, if any, during the hearing or a Final Decision may be issued by default pursuant to SDCL 1-26-20. After the hearing, the Commission will consider all evidence and testimony that was presented at the hearing. The Commission will then enter Findings of Fact, Conclusions of Law, and a Final Decision regarding this matter. As a result of the hearing, the Commission shall determine whether U S WEST committed an unlawful or unreasonable act, rate, practice, or omission and, if so, order any appropriate relief. The Commission's Final Decision may be appealed by the parties to the state Circuit Court and the state Supreme Court as provided by law. It is therefore

ORDERED that a hearing shall be held at the time and place specified above on the issue of whether U S WEST committed an unlawful or unreasonable act, rate, practice or omission and, if so, what relief would be appropriate.

Pursuant to the Americans with Disabilities Act, this hearing is being held in a physically accessible location. Please contact the Public Utilities Commission at 1-800-332-1782 at least 48 hours prior to the hearing if you have special needs so arrangements can be made to accommodate you.

Dated at Pierre, South Dakota, this 15th day of January, 1999.

CERTIFICATE OF SERVICE

The undersigned hereby certifies that this document has been served today upon all parties of record in this docket, as listed on the docket service list, by facsimile or by first class mail, in properly addressed envelopes, with charges prepaid thereon.

By: Melanie Kalbo

Date: 1/15/99

(OFFICIAL SEAL)

BY ORDER OF THE COMMISSION:
Commissioners Burg, Nelson and Schoenfelder

WILLIAM BULLARD, JR.
Executive Director

BEFORE THE PUBLIC UTILITIES COMMISSION
OF THE STATE OF SOUTH DAKOTA

IN THE MATTER OF THE COMPLAINT FILED BY SHERYL L. KLEIN, VALENTINE, NEBRASKA, AGAINST U S WEST COMMUNICATIONS, INC. REGARDING POOR SERVICE AND A REQUEST TO HAVE LINES UPDATED	)	STAFF HEARING BRIEF TC98-183
IN THE MATTER OF THE COMPLAINT FILED BY JOANN KLEIN, VALENTINE, NEBRASKA, AGAINST U S WEST COMMUNICATIONS, INC. REGARDING POOR SERVICE AND A REQUEST TO HAVE LINES UPDATED	)	TC98-184
IN THE MATTER OF THE COMPLAINT FILED BY LAWRENCE KLEIN, VALENTINE, NEBRASKA, AGAINST U S WEST COMMUNICATIONS, INC. REGARDING POOR SERVICE AND A REQUEST TO HAVE LINES UPDATED	)	TC98-199
IN THE MATTER OF THE COMPLAINT FILED BY MARGARET FIGERT, MISSION, SOUTH DAKOTA, AGAINST U S WEST COMMUNICATIONS, INC. REGARDING POOR SERVICE AND A REQUEST TO HAVE LINES UPDATED	)	TC98-212

This brief is provided to the Commission to assist it in addressing the issues in these cases.

1. Legislative Goals.

The Legislature has directed that its intent ". . . that all of the future rules, policies, actions, and decisions of the state of South Dakota and all of its political subdivisions, and the actions and decisions of its offices and employees, shall be made consistent with and

further the purposes and directives of §§ 49-31-60 through 49-31-68, inclusive." SDCL 49-31-60. SDCL 49-31-62 provides for a narrowband network. SDCL 49-31-65 provides for its deployment within five years (presumably of 1997) and significant results within two years in education, medical, business and government communities of interest.

2. Commission powers.

The Commission under SDCL 49-31-7.1 has broad general powers to look into the safety, accommodation and convenience of the public. Under SDCL 49-31-7.1(1), it may examine a telecommunications company's condition and the condition of its equipment with these standards in mind. Under subsection (2) it can require a telecommunications company to install a facility necessary for these three considerations. It can require special reports under subsection (4). Finally, the Commission has the power necessary to supervise and control such companies, SDCL 49-31-3.

3. Commission responsibility.

Under SDCL 49-31-3, the Commission is required to inquire into complaints, unjust discrimination, neglect or violation of state laws governing telecommunications companies.

4. Telecommunications company responsibility.

Telecommunications companies granted authority to operate in South Dakota must have ". . . sufficient technical, financial and managerial capabilities. . ." to provide services for which they seek authority to provide. See SDCL 49-31-3.

5. Telecommunications customers have an unrestrained right to claim damages before the Public Utilities Commission.

SDCL 49-13-1.1 provides:

START

OF

RETAKE

further the purposes and directives of §§ 49-31-60 through 49-31-68, inclusive." SDCL 49-31-60. SDCL 49-31-62 provides for a narrowband network. SDCL 49-31-65 provides for its deployment within five years (presumably of 1997) and significant results within two years in education, medical, business and government communities of interest.

2. Commission powers.

The Commission under SDCL 49-31-7.1 has broad general powers to look into the safety, accommodation and convenience of the public. Under SDCL 49-31-7.1(1), it may examine a telecommunications company's condition and the condition of its equipment with these standards in mind. Under subsection (2) it can require a telecommunications company to install a facility necessary for these three considerations. It can require special reports under subsection (4). Finally, the Commission has the power necessary to supervise and control such companies, SDCL 49-31-3.

3. Commission responsibility.

Under SDCL 49-31-3, the Commission is required to inquire into complaints, unjust discrimination, neglect or violation of state laws governing telecommunications companies.

4. Telecommunications company responsibility.

Telecommunications companies granted authority to operate in South Dakota must have ". . . sufficient technical, financial and managerial capabilities. . ." to provide services for which they seek authority to provide. See SDCL 49-31-3.

5. Telecommunications customers have an unrestrained right to claim damages before the Public Utilities Commission.

SDCL 49-13-1.1 provides:

> Any person claiming to be damaged by any telecommunications company or motor carrier may either make complaint to the commission or may bring suit on his own behalf for the recovery of damages in any court of competent jurisdiction in this state, but no person may pursue both remedies at the same time.

It is submitted that in clear language the Legislature has provided a remedy for any person claiming to be damaged by a telecommunications company. The statute does not otherwise impose conditions on that right.

6. U S WEST's tariffs which attempt to limit its liability are invalid and unenforceable.

a. First, for the reason stated in Section 1, above, the law provides an unrestrained right to claim damages from a telecommunications company.

b. Second, Section 2, page 25, Release 1, paragraph A of U S WEST's tariff is attached to its Answer in this case.

SDCL 49-31-12, as paraphrased, provides that the Commission is to make a schedule of reasonable fares and rates or prices for telecommunications companies. Under SDCL 49-31-12.1, rates and prices filed in tariffs are presumed fair and reasonable. Companies' responsibilities regarding rates and prices are defined by SDCL 49-31-12.2. In other words, tariffs are to cover fares, rates and prices.

This tariff is a limitation of liability. It does not set a fare, a rate or a price. It attempts to shield U S WEST from contract and tort liability. It attempts to define what can be recovered from U S WEST when service is not provided for a variety of reasons. This has nothing to do with what U S WEST may charge customers as a fare, rate or price.

END

OF

RETAKE

The statutes cited above are clear and unambiguous and should be given their plain meaning and intent. U S WEST Communications, Inc. v. Public Utilities Commission, 505 N.W.2d 115, 123 (S.D. 1993).

7. The measure of damages is an amount that will compensate an injured party for detriment suffered.

The measure of damages is provided for by statute. In contract, that standard as stated in SDCL 21-3-1 is:

> For the breach of an obligation arising from contract, the measure of damages, except where otherwise expressly provided by this code, is the amount which will compensate the party aggrieved for all the detriment proximately caused thereby, or which, in the ordinary course of things, would be likely to result therefrom. No damages can be recovered for a breach of contract which are not clearly ascertainable in both their nature and their origin.

In tort, the standard is in SDCL 12-3-1:

> For the breach of an obligation not arising from contract, the measure of damages, except where otherwise expressly provided by this code, is the amount which will compensate for all the detriment proximately caused thereby, whether it could have been anticipated or not.

8. A telecommunications company which does not properly provide service is liable for a wide range of damages.

As to damages which may be recovered when a telephone company does not properly provide service, a general statement of the law is found at 74 Am.Jur. 2d TELECOMMUNICATIONS § 65:

> The compensatory damages which may be recovered for failure of a telephone company to perform its duty to furnish telephone facilities and to render proper service are not necessarily limited to the mere monetary loss which the injured party may be able to prove as a result of this neglect or failure of the company, but may include such elements as annoyance,

> inconvenience, and loss of time, and in some cases even mental or physical suffering. There is no distinction between residence and business telephones with regard to the right to recover damages for annoyance, inconvenience, and loss of time naturally resulting from the interruption of the service. However, it has been held that in the absence of proof of any pecuniary loss, the measure of damages is the amount paid for the service for the time during which it is refused, and that in such a case, damages for mere inconvenience and annoyance cannot be recovered. (emphasis supplied).

There are two cases which, although of some age, discuss the awarding of damages for inconvenience in telephone service and they appear to form a basis for recovery of such damages either in contract or tort.

In Cumberland Telegraph & Telephone Co. v. Hobart, 42 S. 349 (Miss. 1906), the Court said:

> The telephone has come to be a necessity. It is the thing which completes the use of a home. It is resorted to daily, and hourly, to such an extent as to be regarded as indispensable, yet, when it comes to taking pencil and paper and calculating day by day what pecuniary value it possesses, it is almost impossible. The inconvenience, the annoyance, and the trouble of being without one is a damage which no one can accurately estimate. It is such inconvenience and annoyance as is only to be fully appreciated when one is deprived of its use; its loss is a great and distinct damage, yet such damage as is not susceptible of exact measurement. at 350 (emphasis supplied).
>
> The damage sustained by the loss of a telephone in its very nature is largely composed of inconvenience and annoyance. Supra, at 351.

In a tort action regarding a telephone company's discontinuance or suspension of service, it has been recognized that recovery for annoyance and inconvenience can be had, see Chesapeake & Potomac Telephone Co. of Virginia v. Carless, 102 S.E. 569 (VA, 1920). That, in order to recover this damage, it is proper for a trier of fact to consider all facts and circumstances which show the damage. Quoting Sedgwick on Damages, the Court adopted the following language:

> And when, from the nature of the case, the amount of damages cannot be estimated with certainty, or only a part of them can be so estimated, we can see no objection to placing before the jury all the facts and circumstances of the case having any tendency to show damages, or their probable amount, so as to enable them to make the most intelligible and probable estimate which the nature of the case will admit. at 571.

In South Dakota, personal inconvenience has been recognized as a proper element of damage, for instance in personal injury type actions, see Koenig v. Weber, 174 N.W.2d 218 (S.D. 1970).

Dated this 3rd day of February, 1999.

Camron Hoseck
Staff Attorney
South Dakota Public Utilities Commission
500 East Capitol
Pierre, SD 57501
Telephone (605) 773-3201

THE PUBLIC UTILITIES COMMISSION

OF THE STATE OF SOUTH DAKOTA

RECEIVED
FEB 12 1999
SOUTH DAKOTA PUBLIC UTILITIES COMMISSION

IN THE MATTER OF THE COMPLAINT FILED BY SHERYL L. KLEIN, VALENTINE NEBRASKA, AGAINST U S WEST COMMUNICATIONS, INC. REGARDING POOR SERVICE AND REQUEST TO HAVE LINES UPDATED	TC98-183
IN THE MATTER OF THE COMPLAINT FILED BY JOANN C. KLEIN, VALENTINE NEBRASKA, AGAINST U S WEST COMMUNICATIONS, INC. REGARDING POOR SERVICE AND REQUEST TO HAVE LINES UPDATED	TC98-184
IN THE MATTER OF THE COMPLAINT FILED BY LAWRENCE KLEIN, VALENTINE NEBRASKA, AGAINST U S WEST COMMUNICATIONS, INC. REGARDING POOR SERVICE AND REQUEST TO HAVE LINES UPDATED	TC98-199
IN THE MATTER OF THE COMPLAINT FILED BY MARGARET FIGERT, MISSION SOUTH DAKOTA, AGAINST U S WEST COMMUNICATIONS, INC. REGARDING POOR SERVICE AND REQUEST TO HAVE LINES UPDATED	TC98-212
~~IN THE MATTER OF THE INTERCONNECTION CONTRACT NEGOTIATIONS BETWEEN AT&T COMMUNICATIONS OF THE MIDWEST, INC. U S WEST COMMUNICATIONS, INC. PURSUANT TO 47 U.S.C. SECTION 252~~	~~TC98-018~~

Exhibits with TC98-183

ORIGINAL

HEARD BEFORE THE PUBLIC UTILITIES COMMISSION

PROCEEDINGS: February 3, 1999
1:30 P.M.
Cherry-Todd Electric Co-op
West Highway 18
Mission, South Dakota

PUC COMMISSION: Laska Schoenfelder, Commissioner
Pam Nelson, Commissioner

COMMISSION STAFF PRESENT: Bill Bullard
Camron Hoseck
Leni Healy

Reported by: Lori J. Grode, RMR

APPEARANCES

For US West: Thomas J. Welk
P.O. Box 5015
Sioux Falls, South Dakota,
57117-5015
and Colleen Sevold

I N D E X

Witness	Page
Milton Klein	7
Sheryl Klein	34
Randy Klein	36
Regina Lamoureaux	51
Robert Anderson	64
Pat Baker	74
JoAnn Klein	78
Lawrence Klein	89
Margaret Figert	91
Edward A. Peters	101

E X H I B I T S

		Page
1	Sheryl Klein Complaint	6
2	Sheryl Klein Answer	6
3	JoAnn Klein Complaint	6
4	JoAnn Klein Answer	6
5	Lawrence Klein Complaint	6
6	Lawrence Klein Answer	6
7	Margaret Figert Complaint	6
8	Margaret Figert Answer	6
9	Todd County Map	8
10	Hidden Timber Map	8
11	Statement by Sheryl & Milton Klein	8
12	Large LATA Map of U S West	109
13	JoAnn Klein Statement	79
14	U S West Ad	84
15	JoAnn Klein Phone Bills	80
16	Randy Klein Phone Bills	48
17	Lawrence Klein Statement	89
18	Golden West Map	94
19	U S West letter	137

PROCEEDINGS

(EXHIBITS NO. 1-15 WERE MARKED FOR IDENTIFICATION.)

COMMISSIONER NELSON: Good afternoon. begin the hearing for Dockets TC98-183, TC98-184, TC98-199, and TC98-212, in the matter of the comp filed by Sheryl L. Klein, JoAnn Klein, Lawrence K all of Valentine, Nebraska, and Margaret Figert o Mission, South Dakota, against U S West Communicat Inc., regarding poor service and a request to have lines updated.

The time is approximately 1:30 p.m. The is February 3rd, 1999; and the location of the hea is Cherry-Todd Electric Cooperative, West Highway Mission, South Dakota.

I am Pam Nelson, Commissioner, and Commissioner Laska Schoenfelder is also present toc Commissioner Jim Burg is home sick.

I am presiding over this hearing. This hearing was noticed pursuant to the Commission's or for the Notices of Hearing issued January 15th, 199 The issue at this hearing is whether U S West commit an unlawful or unreasonable act, rate, practice, or omission; and, if so, what relief would be appropriate.

All parties have the right to be present and to be represented by an attorney. All persons so testifying will be sworn in and subject to cross-examination by the parties. The Commission's final decision may be appealed by the parties to the State Circuit Court and Supreme Court.

At this time I would take appearances of the parties. And I think if it's all right with everyone, we'll take all the complainants first and then hear from U S West. Any objections?

MR. WELK: No.

MR. MILTON KLEIN: I'm Milton J. Klein.

COMMISSIONER NELSON: Okay. We need all of you to identify yourselves.

MS. JOANN KLEIN: I am JoAnn Klein, Mrs. Clifford Klein.

MRS. SHERYL KLEIN: I'm Sheryl Klein.

MS. FIGERT: Margaret Figert here.

MR. LAWRENCE KLEIN: Lawrence Klein back here.

COMMISSIONER NELSON: And U S West.

MR. WELK: Tom Welk, attorney from Sioux Falls.

MR. PETERS: And Edward Peters from the Network Department Endeavor.

MR. HOSECK: And Camron Hoseck on behalf Commission staff, and with me today is Leni Healy, consumer representative.

MR. WELK: Madam Chair, also Colleen Sevo the manager of regulatory affairs from Sioux Falls, also should be known, and she is present from U S West.

COMMISSIONER NELSON: Okay. I would ask Sheryl Klein and Milton be sworn.

MILTON AND SHERYL KLEIN,

called as a witnesses, being first duly sworn, was examined and testified as follo

MR. WELK: Madam Chair, before we begin, j for your information, prior to the start of the hear we have premarked certain exhibits. And the first eight exhibits are the Complaints and the Answers to U S West in the order:

Exhibit 1 is the Sheryl Klein Complaint, Exhibit 2 is the Sheryl Klein Answer, Exhibit 3 is th JoAnn Klein Complaint, Exhibit 4 is the JoAnn Klein Answer, Exhibit 5 is the Lawrence Klein Complaint, Exhibit 6 is the Lawrence Klein Answer, Exhibit 7 is the Figert Complaint, and Exhibit 8 is the Answer.

And we have no objection, at least from U S West, admitting those to start the hearing.

MR. HOSECK: And staff would stipulate to admitting those into the record.

COMMISSIONER NELSON: They're admitted, if no objections.

MR. HOSECK: There are no objections.

COMMISSIONER NELSON: So they're admitted.

COMMISSIONER NELSON: Do we have opening statements? Would you like to give an opening statement? Just tell us.

MR. MILTON KLEIN: I'd like to speak on behalf of Milton and Sheryl Klein. First, I'd like to by way of acquainting you with the area, which we are going to be discussing, this is a map representing approximately Todd County, South Dakota. Mission, where you're located right now, is right here.

And this area southeast of Mission about 20 miles southeast of Mission and designated as the Hidden Timber Neighborhood, and we'll be referring to this in our discussion. And this is where the location of Valentine, Nebraska, where our phone service is serviced from is approximately 30 miles from this Hidden Timber area.

Also, we might be referring later on to a school called Littleberg School, it's south and west of our area; and the Lakeview School, which is south and

west of Mission. This is Exhibit 9. This is more a close-up of what I designated on Exhibit 9 as the Hidden Timber neighborhood.

And to acquaint you with some of the parties involved in this proceeding, this is our residence, this is the residence of Clifford and JoAnn Klein, Lawrence Klein, and this is the residence of the Figerts.

I also have some documents which we'll reference some other neighbors and they'll be -- this is the Klein Elementary School, this is the Jansens, the Sarps, Randy Klein, the Abbotts, Havemans, Bryans, the Bakers, who are here today, and Evelyn Whiting.

I'd like to -- I have a number of documents here, which are all marked Exhibit 11, and they consist of a prepared statement, which I intend to present, and a log of my troubles, some bills, and some questionnaires which I received from -- solicited and received from my various neighbors. I'd like that entered as Exhibit 11.

MR. WELK: Are we in opening statement or in direct examination? I thought the Chair asked for opening statements.

COMMISSIONER NELSON: We're in opening statements. You did an opening statement. Are you

done?

MR. MILTON KLEIN: I don't know what you define as opening statement, so I guess I'm not totall familiar with what you're asking for.

MR. BULLARD: A quick overview of what your case will be. And once you've done, we will suffice with that and come back with your testimony later.

MR. MILTON KLEIN: Okay. We, Sheryl and Milton Klein, believe U S West has committed unreasonable omissions, acts, and practices by failing to provide reliable telephone service by blocking attempts to address legitimate credit issues and by practicing inefficient trouble response procedures.

We need reliable telephone service, and we ask that U S West be required to renovate their equipment to a reliable status; that they be required to make credits for bogus calls and nonservice, and that they be required to improve their response system.

COMMISSIONER NELSON: Thank you. U S West, would you like to make an opening statement?

MR. WELK: We have no opening statement.

COMMISSIONER NELSON: All right. No opening statement?

MR. HOSECK: Nothing from staff, no.

COMMISSIONER NELSON: Staff doesn't have any. Now can we proceed? Okay. Now you can proceed with your case.

MR. MILTON KLEIN: U S West has committed unreasonable omissions by failing to provide reliable telephone service. We have experienced many difficulties with U S West phone service. These problems were especially troublesome during the period from January 1998 through October 1998.

I reference Attachment One, which is a log which I have consolidated out like those documentable troubles we had. However, phone service problems are not unique to our residence or to this time frame. Rather, problems are both widespread in our neighborhood and have occurred both before and since these dates.

Let us highlight some of our difficulties during this time period. One, poor quality conversations. Many of both local and long distance calls have been full of static and other odd sounds so much that conversations have been difficult to impossible.

Cut-off calls, we have had many calls cut off abruptly and the line goes dead. We have been disconnected from the Internet due to phone troubles.

Three, odd sounds. The phone, while not in use, emits odd sounds at random times, such as pinging rings that sound tinkly and full rings that sound normal. When the phone is picked up, the line is full of static or simply dead. These odd sounds are particularly troublesome at night when they interrupt our sleep.

Dead phones. Occasionally the line is totally inoperable. Either it's completely dead or just static.

Bogus calls billed to our phone. During the period between January 1998 and November 1998 we were billed for many calls which we did not make. In February alone we were billed for 21 bogus calls to the local directory assistance, 411. On October 5th we were billed for bogus call trace activation call, a star something, something. I don't recall exactly what that is.

We reported most of these service problems to U S West, and technicians attempted to fix and repair them. On October 6th the repair crew from U S West found and fixed a short in a neighbor's terminal box. It was over here to the Bryans. The short was found in the terminal box at the end of a neighbor's driveway. It was the end of an old telephone line where it was

spliced onto a newer section of line. Some of the lines have been replaced in the last 15 years, but so date back approximately 35 years.

At the time we were convinced that this problem was a direct cause of the phone troubles we h been having since January 1998. However, on October it rained, the phone tinkled, and a bogus 411 call wa billed to our account. At least three of our neighbo have since experienced phone service difficulties. Randy Klein, the Abbotts and the Klein School.

Our phone service has been mostly good since November 1st. However, just Monday morning, February 1st, 1999, I tried to call a neighbor, Pat Baker. After about four rings I was cut off. Pat later said that her phone started a terrible buzzing noise when she picked it up. Our phone system is still not reliable.

The old phone lines will likely develop frequent problems in the future. We question the reliability of the SLC 5 operating system. The continuing difficulties of our neighbors and we continue to experience attest to this overall unreliability. This unreliability is unreasonable.

U S West has acted unreasonably by blocking attempts to receive credit for bogus calls billed to

our service. On March 13th, 1998, I called U S West billing for credit for the 21 directory assistance calls caused by the phone troubles in February. A representative named Lucy refused to believe that the phone shorting out caused these calls. She insisted that the only way these calls would show up is if someone had dialed 411. At one point I had her look up when the calls were posted, and she read some of them to me. They were at odd hours and times when no one was home.

I asked to speak to her supervisor. After some more discussion, she went off the line for several minutes. No supervisor spoke with me. She said that she had checked and again stated that these calls had to have been initiated by someone in our residence. However, she would give me credit for them this time but not again. I told her that I was sure I would be back because the repairman had just fixed the phone and there were bound to be more billing calls on the next billing cycle. She said to go ahead. She apparently placed instructions in my file blocking future credit for such calls. These actions by U S West's representative were unreasonable.

In April I again called for credit for the three bogus 411 calls billed to my March statement.

Julie informed me that she could not credit me becaus
instructions were in my file not to do so. After som
further discussion, she was finally successful in
issuing a credit. In October I called U S West billi
to get credit for a bogus call trace activation call
caused by October 5th phone trouble. The
representative said that she would credit me this time
but that this was highly unusual. I warned her not to
enter notations in my file preventing credit since I
had had that trouble before. She assured me that she
would not.

Many of my neighbors also report bogus 411
calls and difficulty in getting credit from U S West.
Since at least September the bogus 411 calls caused by
phone service problems have been billed to long
distance as long distance calls. Our long distance
carrier, AT&T, has been nothing but cooperative in
crediting these calls. U S West, on the other hand,
has not been cooperative. They have been
unreasonable.

U S West has committed an unreasonable
practice by failing to provide timely repair service.
Currently, U S West trouble reports are received by a
central office and relayed to their repair crews. The
time delay often results in any moisture-related phone

troubles being dried out by the time the repair crew arrives. In addition, this time delay often results in a problem being rolled over to a new date or even through a weekend.

As an example, on October 1st, 1998, a repair crew, including Myron Wasson, the manager from Norfolk, was here to work on the phone troubles. They patched the line in our driveway that had a small short. By the time they left that evening, it had started to rain. By 1:00 p.m. the following date, Friday, October 2nd, the phone was inoperable again. By the time we could submit another trouble report at 5:50 p.m., it was too late to get help before Monday. The next crew arrived on Tuesday, October 6th. A practice that results in delays and in repairing a central phone service is unreasonable.

We need reliable phone service. We require reliable phone service for emergency services. We live in a remote area and have little time to waste summoning help for medical emergencies and fires. We are especially concerned that our community senior citizens have access to reliable phones to enable them to remain in their own homes and retain an reasonable level of independence. We run our ranching business out of our home. When the phone is dysfunctional, we

cannot receive or transmit calls, E-mail, or use t
internet.

In addition, Sheryl often works out of ou
home on issues related to her job as a department
director at Sinte Gleska University and has experie
extreme frustration trying to use the phone. For
example, during the summer of 1998 we went through
several-week spate of erratic phone service. The t
coincided with Sheryl's efforts to contact job
applicants.

Some applicants tried to call our home
number. Weeks went by when we occasionally could no
get calls in or out. One applicant told Sheryl it ha
been a most frustrating experience as he had made mar
long distance calls that were either cut off or did n
get through at all. We have experienced similar
frustrations trying to conduct ranch and personal
business over the phone.

We need reliable phone service in our
school. Our community has a K-8 school, Klein
Elementary. It is important to have reliable
communications to the school for emergencies and to ru
the internet. At present the phone service has proven
unreliable for both.

What we want done: Number one, we want U S

West to renovate their existing equipment to make it 100 percent reliable. We do not pretend to know what the exact solution is. However, we have several relevant questions. Is the SLC 8 phone system we have reliable or does it really need replaced with a different engineering design? One of the characteristics of this system seems to be that a smal problem anywhere in the neighborhood can affect many customers. Another characteristic seems to be that these problems are difficult to pinpoint.

Would replacing all the old lines in our neighborhood increase the reliability of our service? Some of our lines are over 30 years old. Our biggest problem last year was we found in one of these old lines.

Do field crews have the necessary staff, training, and equipment to troubleshoot our system? Eight months is too long to find a problem.

Number two, we expect to be credited for all bogus calls billed to our account and for the days on which we experience trouble. At the November 3rd, 1998, Commission meeting, U S West representative stated that she had received our reviewed our account and issued us some credit. Indeed a credit was posted on our November 7th statement for $11.67. However, we

expect a reconciliation of how she computed this figure.

We expect U S West to review our records f January 1st, 1998, to November 30th, 1998, and credi as follows: All days when calls for service were received, all 411 calls and trace activation calls, a days when 411 or trace activation calls were record We expect this procedure to also be extended to the other customers referenced in this testimony.

Number three, we expect U S West to inform their customer service representatives that phone troubles can cause bogus 411 and other calls to be recorded. We expect U S West to provide us with a cop of the memorandum to employees informing them of such.

Number four, we expect U S West to change their trouble reporting procedures to reduce response time and provide a more direct link between customers and the repair technicians.

Number five, our original complaint asked for $500 reimbursement for associated stress and hassles. We realize that the standard of proof for such a reward likely requires evidence more specific than that which we are able to provide, and such reward would also likely be subject to considerable dispute. While we still believe that such a settlement would be

warranted, we also believe that our energies and resources would be better utilized concentrating on ou main goal, obtaining reliable phone service.

In summary, we believe that we have ample evidence to show that U S West has been unreasonable b failing to provide reliable phone service, that they have acted unreasonably by blocking credit for legitimate claims, and that the repair reporting practices are unreasonable. We believe that we are entitled to reasonable services. And we therefore ask that the Commission require appropriate relief.

And I have included in this exhibit, as I mentioned, a log detailing what I could document as the documentable troubles during this time period. I attached bills indicating when these bogus calls were posted to our account. And I have a number of questionnaires which were filled out by some of my neighbors indicating answers to the questions I asked them with reference to what kind of similar troubles they had been having.

I'd like at this time to call Mr. Randy Klein as a witness.

MR. WELK: Wait. Don't I get to cross-examine? Are you done with your opening?

COMMISSIONER NELSON: I was going to ask

would you like to have the Exhibits 9, 10, and 11 admitted?

MR. MILTON KLEIN: Yes, ma'am.

COMMISSIONER NELSON: If no objection?

MR. WELK: 9 and 10 I have no objection. I have no objection to the statement he just read a the log he's done and his bills. I don't have any objection. All of the questionnaires that he's attached, I do have an objection, unless the people here that I can cross-examine them.

This would deny U S West a right to cross-examine these witnesses. It's hearsay. So I object to everything other than what his testimony or any other witness that he has here.

COMMISSIONER NELSON: I guess that I would rule that we would admit 9 and 10 and take 11 under advisement. We'll admit and take under advisement. they'll be admitted.

COMMISSIONER SCHOENFELDER: We could admit part of it and have a discussion on the rest, could not?

MR. WELK: Madam Chairman, I don't object to half the Exhibit 11, which is his testimony. The hal I'm objecting to are the questionnaires from others.

COMMISSIONER NELSON: Well, we'll admit 9,

10, and 11 in their entirety, and we'll take the part you object to under 11 under advisement.

MR. WELK: Fine.

COMMISSIONER NELSON: So now Mr. Welk gets to cross-examine, right?

Are you done with your testimony?

MR. MILTON KLEIN: I would add that several of the people in these questionnaires are here present today. Mrs. Baker is here, Mr. Randy Klein is there, and Miss Regina Lamoureaux.

COMMISSIONER NELSON: What we agreed to do is take all the testimony and admit it and then we will take it under advisement with our legal counsel and then we'll decide whether or not we have to leave any of those out.

COMMISSIONER SCHOENFELDER: Those people could be called to testify to verify their statements.

COMMISSIONER NELSON: Right.

Does U S West have any questions?

MR. WELK: Yes, I do.

CROSS-EXAMINATION

BY MR. WELK:

Q. Mr. Klein, my name is Tom Welk. I'm an attorney from Sioux Falls representing U S West.

First of all, would you tell me what the

relationship is, the family relationship between yourself and JoAnn Klein?

A. She's my mother.

Q. Is there any relationship between you and Lawrence Klein?

A. He's my uncle.

Q. Is there any family relationship between you and Mrs. Figert?

A. No.

MS. MARGARET FIGERT: God, I hope not.

MR. WELK: He may feel the same way.

Q. What about Sheryl Klein?

A. She's my wife.

Q. Now, in looking at your Exhibit 11, I want to ask a couple of questions. First of all, are you saying that the bogus calls, as you've called them, the 411 calls, do you believe you received all the credits or not?

A. Not for all of it, no.

Q. What period of time do you believe you have not received a credit?

A. That's difficult for me to determine. I can tell you which calls that I asked for that I was credited for. I can't tell you what Colleen credited to my account back in November. I do not know what

that was for.

Q. Did you ever -- let's just -- did you ever make any 411 calls?

A. No.

Q. So any time there appears a 411 call on your bill, you would claim it's one of these bogus calls?

A. That's correct.

Q. And we don't have a problem going back and checking it. Do you have all of your bills that Colleen could go through to help the reconciliation you've requested?

A. I have them with me, yes.

Q. So you could give those to Colleen and she could -- if she could go through and look at those and make sure all those credits have been removed. As far as I am concerned, sir, no one is attempting to credit you for those calls. So if you want to give those to Colleen, you know, after the hearing and she can go through and check and try to provide you with getting those off your bill.

Has there been any other billing problems other than the 411 calls?

A. Yes, there have been several. I just noticed the other day, and I included in my log, a call to somewhere in New York.

Q. I saw that. That just came out of nowhere?
A. Absolutely. You'll notice that that's all series of small numbers, 212-213-1111.
Q. So you've circled those on Exhibit 11?
A. Yes, sir.
Q. So we would have the 411 calls and the calls that are on Exhibit 11 that you would contend were not appropriate charges?
A. That's correct.
Q. Now, on your exhibit and going through your log, that's Attachment One, I note that your attachment completed on October 29th, or you had a report of phone trouble and then February 1st there is an attempt that you described today. Was there any trouble on your phone line from October 29th to February 1st?
A. No.
Q. Did you make a trouble -- do you know what I mean by a trouble report?
A. Yes.
Q. Did you make a trouble report for the incident on February 1st?
A. No.
Q. So if we look at the company records from October 29th, which was the hearing approximately -- I believe the initial hearing before the Commission was

November 2nd. So since that until today, you've made no trouble report on your line?

A. That's correct.

Q. Did you ever make trouble reports to U S West for other people other than for your own line?

A. Yes, I did.

Q. And who would you have made reports for?

A. My mother, JoAnn Klein.

Q. Anyone else that you are aware of that you made report trouble reports for?

A. I don't think so.

Q. Are you aware of anybody who made reports to U S West for trouble on your line?

A. My wife reported to some from her office phone at Mission.

Q. Other than your wife, did other neighbors ever make any reports on your lines?

A. I don't think so.

Q. And I ask that only because the records reveal that there was -- there were multiple reports from time to time on the same line. A neighbor might have tried to call you and not reached you and they might have called in a report. Are you aware of any of those type of reports where a neighbor who might have tried to call you then called in a trouble report.

UNKNOWN SPEAKER: Yes.

COMMISSIONER SCHOENFELDER: She can't answer. The people who are sworn have to answer, I'm sorry.

A. I'm not aware of it, no.

Q. Has there ever been -- did you ever do any home wiring in your residence or any of your out buildings?

A. My phone doesn't go to my out buildings. My wiring inside my residence is my wiring.

Q. Have you ever had any problems with that?

A. No.

Q. Now, one of the things that you have requested is some response to repairs. Now, as I understand in reading your statement, every time that you have called, someone has been dispatched?

A. I believe that's accurate, yes.

Q. But your complaint is they haven't been dispatched quick enough?

A. That's correct.

Q. And where are the technicians that are dispatched from to your house, where do they reside?

A. Valentine.

Q. How far is your house from Valentine?

A. About 33 miles.

Q. And are the roads to your home from Valentine, are they paved?

A. No.

Q. How many miles of the 33 miles of the roads are paved to your place?

A. Approximately one. You mean paved as blacktop?

Q. Right, blacktop.

A. About 11 and a half miles.

Q. So the last approximately 20 miles, are they gravel or dirt?

A. Yeah, dirty gravel, yeah.

MRS. SHERYL KLEIN: They're posted at 35 miles an hour. That's a good gravel road it's not a remote back country road.

Q. Do you have any engineering background?

A. No.

Q. So the question, what you are complaining today, is about basically the service that existed prior to October 29th, 1998?

A. No. On February 1st I had trouble again.

Q. But you haven't reported it?

A. No, I did not report it.

Q. Would you expect, if you had trouble, to report it?

A. Would I expect someone if I had trouble t
report it?

Q. Let me start over. Would it be reasonable
someone, if they had trouble, report it to the compa
so they could try to fix it?

A. Perhaps.

Q. Well, how would U S West know, sir, if you
had trouble if you didn't report it?

A. Well, U S West is continuing to have troubl
with a number of my neighbors. And this just points
out the continuing unreliability of the phone service
is the reason I put this. I did not know whether thi
was my neighbor's phone or my phone.

And, frankly, since this time, since this wa
Monday, I've been busy preparing this testimony and
didn't take the time, I guess, to call U S West on thi
problem.

Q. I'm not being critical you haven't had time,
sir. But how would you expect the company to fix the
line if you didn't report it?

A. I don't.

MR. WELK: I don't have anything further.

COMMISSIONER NELSON: Does the staff have any
questions?

MR. HOSECK: Yes.

CROSS-EXAMINATION

BY MR. HOSECK:

Q. Milton, could you explain to the Commission and in referencing Exhibit 10, which is the Hidden Timber neighborhood, exactly how you interact with your neighbors as far as making a living and community of interest? How does everybody get along out there and how is a phone important in that relationship?

A. Well, we rely on our neighbors a lot for help, for working cattle, and things of that nature. Also, we have no rural fire service. If we have a fire, we depend upon our neighbors to respond and essentially help us put it out.

And we also rely on each other for medical emergencies. I would have no qualms calling some of my neighbors if there's something I couldn't handle. If I'm gone and my elderly parents are at home, they could call one of my neighbors to come help them.

Q. And what is the approximate distance from the Jansens up to the Havemans? What would be that distance in terms of mileage?

A. About two miles, a little over two miles.

Q. So that group of people is essentially living within about a couple miles of each other?

A. That's correct.

Q. Have you ever had any fire emergencies where you've had to call upon a neighbor?

A. Have we had any that we had to call neighbors? There have been a number of them in the community, yes.

Q. Could you give the Commission an example of one of those situations?

UNKNOWN SPEAKER: Jim Whiting had a fire in his house.

A. That was about two years ago, as I recall.

Q. And --

A. He lives about down here. (Indicating).

Q. Essentially, has this problem been going on since about a year ago; is that correct?

A. Well, that's the major emphasis of the problem as I referenced in here. We've had a number of problems in prior years past. Frankly, this one has been so burdensome on my mind that it's difficult for me to focus on very far in the past because this has been so troublesome.

I do have at least one witness who I expect could testify that they've been having, that their problems have been gone back a lot further than this and also since this time. That's on this line.

MR. HOSECK: Okay. I have no further

CROSS-EXAMINATION

BY MR. HOSECK:

Q. Milton, could you explain to the Commission and in referencing Exhibit 10, which is the Hidden Timber neighborhood, exactly how you interact with your neighbors as far as making a living and community of interest? How does everybody get along out there and how is a phone important in that relationship?

A. Well, we rely on our neighbors a lot for help, for working cattle, and things of that nature. Also, we have no rural fire service. If we have a fire, we depend upon our neighbors to respond and essentially help us put it out.

And we also rely on each other for medical emergencies. I would have no qualms calling some of my neighbors if there's something I couldn't handle. If I'm gone and my elderly parents are at home, they could call one of my neighbors to come help them.

Q. And what is the approximate distance from the Jansens up to the Havemans? What would be that distance in terms of mileage?

A. About two miles, a little over two miles.

Q. So that group of people is essentially living within about a couple miles of each other?

A. That's correct.

Q. Have you ever had any fire emergencies where you've had to call upon a neighbor?

A. Have we had any that we had to call neighbors? There have been a number of them in the community, yes.

Q. Could you give the Commission an example of one of those situations?

UNKNOWN SPEAKER: Jim Whiting had a fire in his house.

A. That was about two years ago, as I recall.

Q. And --

A. He lives about down here. (Indicating).

Q. Essentially, has this problem been going on since about a year ago; is that correct?

A. Well, that's the major emphasis of the problem as I referenced in here. We've had a number of problems in prior years past. Frankly, this one has been so burdensome on my mind that it's difficult for me to focus on very far in the past because this has been so troublesome.

I do have at least one witness who I expect could testify that they've been having, that their problems have been gone back a lot further than this and also since this time. That's on this line.

MR. HOSECK: Okay. I have no further

questions.

COMMISSIONER NELSON: Do you have any questions? Does anyone else have any questions?

COMMISSIONER SCHOENFELDER: I do.

COMMISSIONER NELSON: Commissioner.

COMMISSIONER SCHOENFELDER: You talk about a SLC 8 system. How do you know that's a SLC 8 system?

A. That's what the repairman referred to it as.

COMMISSIONER SCHOENFELDER: I wanted to know that, how you knew that, because you're not an engineer. I wondered who told you that.

A. When he said engineering experience, that's not formal training. Of course, when we live out here in the rural and make our living with machinery and stuff, we're jacks of all trades, so part of me is engineering. If it's broke, then I'm the one that fixes it.

COMMISSIONER SCHOENFELDER: Have you had the inside wire at your home -- you said you wired it yourself. Have you had that checked so you know that there's no fault there?

A. No. But when the repairman come out, they disconnect from my service, so I think essentially probably the answer is, yes, they have eliminated that as a source.

COMMISSIONER SCHOENFELDER: Okay. I also want to know you talked about the 411 calls, but and went through your list rather quickly. Are there da where you have no phone service at all?

A. Yes.

COMMISSIONER SCHOENFELDER: Do you have tha in here? If it's in here, I won't ask you a lot of questions about it. I'll just read it for myself. I would be in your attachment, your documentation?

A. Apparently we didn't record exactly when those were.

COMMISSIONER SCHOENFELDER: And then, you know, if you had no service at all, if you reported it to U S West, did you get credit for that, or did you not report the no service?

A. Again, at the Commission meeting on November 3rd, were told, I believe it was by Colleen, that she had gone through our file and given us a credit and we did get a credit. I don't know what she credited us for, so we didn't ask. I didn't specifically ask a representative for certain days of non-service other than --

COMMISSIONER SCHOENFELDER: I wondered if you were totally without service, if you did report the total outs to U S West also.

A. I didn't report those, no.

COMMISSIONER SCHOENFELDER: Okay. Now, let's go back before this year. And in the past have you had a lot of outages there and you've just kind of ignored them until they built up, or has this just started to happen very recently?

A. I think we've had problems where our phone had these ringing noises in the night and sometimes we probably just ignored them.

COMMISSIONER SCHOENFELDER: But I guess I'm worried about the ringing noises, but I'm a lot more concerned about total outage where you don't have any means of communication. Did that happen before the last year that you've complained about, or has this just happened in that last year? I'm trying to get a handle on how much you've been without a phone.

A. Boy, I don't specifically recall. But I would stipulate that if we had a complete outage, we would have reported it.

COMMISSIONER SCHOENFELDER: Okay. Thank you. I think that's it. Thank you.

MRS. SHERYL KLEIN: I'd like to add that we've had periods of outages. It would be a few hours, half a day, maybe even a day or two. And by the time the phone came back on, we were so darned happy.

sometimes we wouldn't think to make a record of it.

MR. MILTON KLEIN: That was during this period.

COMMISSIONER SCHOENFELDER: Did you report those to U S West?

MRS. SHERYL KLEIN: Yes, yes.

COMMISSIONER SCHOENFELDER: That's what I wanted to know if you reported to U S West.

MRS. SHERYL KLEIN: Sometimes it's hard to report when your phone is out and the neighbor's phone is out and the other neighbor's phone is out. I wouldn't say a hundred percent of the time U S West was alerted.

COMMISSIONER SCHOENFELDER: When U S West people come out, were they are courteous? Did they try very hard to --

MR. MILTON KLEIN: I had a good relationship with the repairman that came out.

MRS. SHERYL KLEIN: He's friends with our dog. Our dog is a mean dog. He barks at everybody except him.

COMMISSIONER SCHOENFELDER: He must be a nice guy.

MR. MILTON KLEIN: He's been there so often the dog knows him.

COMMISSIONER SCHOENFELDER: Then I have to ask you -- and I can ask U S West this when they did it. But you have a 378 prefix. Is that -- I knew you're 605, so -- your area code, you're served out of the Nebraska office, though, is that true?

A. That's correct.

COMMISSIONER SCHOENFELDER: Thank you.

COMMISSIONER NELSON: I guess I have a question too. I just wanted to be clear in my mind that I thought I heard you say that although you hadn't really had problems from October 29th to January 31st and February, the first of February, you did have a problem?

A. That's correct.

COMMISSIONER NELSON: Did you also say that other neighbors were having problems between October 29th and January 31st? So although you didn't have a problem, others in your neighborhood did?

A. That's correct.

COMMISSIONER NELSON: Okay. Thank you.

MRS. SHERYL KLEIN: Maybe we just dodged the bullet these last couple months and something will happen this spring when things start getting wet again, the ground melts.

COMMISSIONER NELSON: Okay. Thank you.

We're going to go off the record right now.

(A DISCUSSION WAS HELD OFF THE RECORD.)

COMMISSIONER NELSON: We'll go back on the record. And you can call your witnesses.

MR. MILTON KLEIN: I would like to call Mr. Randy Klein, please.

RANDY KLEIN,

called as a witness, being first duly sworn, was examined and testified as follows:

DIRECT EXAMINATION

MR. RANDY KLEIN: Okay. Now, there were a lot of questions about this time frame of January to November. I'm afraid I'm going to have to inform you that this has been an ongoing thing for years. You know, any time you have anything, whether it be a tractor, a car, whatever, it has problems.

Okay, so I've been out there and lived out there for 20-some years at the place I'm at right now. Okay. On the place I'm at, when you're talking to your neighbors, "Well, aren't you ever home?"

"Why do you ask that?"

"Well, we call you, you know, you don't answer your phone."

"Okay. Well, when did you call me?"

"Last night."

"Well, I was home last night, sitting there watching TV or something."

Okay. So I went for that about two years that I had the repair people out and they would come out, you know. But like he says, when you have to call Omaha or Des Moines and then they send a repairman out, by the time they get the repairman out, the problem is gone and they can't find it.

What they finally did, they gave me the local number, must be down in the office in Valentine. Okay. When the phone went out, I would get to a phone; I would call them; they could come right out. They had an outfit from Denver come out. They looked at it. It was like about two years they worked on the problem where they got to where I haven't had anybody asking lately. That's been two, three, four years ago.

Okay. My latest problem -- and I didn't realize that we had this 411 information number, whatever it is. But back in December I had made notes. They had sent me the forms that they had got from the Public Utilities Commission to file a complaint. Okay. They wanted a pretty detailed list. I couldn't substantiate that. I didn't have -- I didn't keep track of every time my phone didn't work. So I thought, well, I better start.

Okay. So since, I think it was probably October, that Milton said something to me about it, I kept track. And on the third of November I went for just that day without phone. Okay. I called it in. My folks called it in. I went to their place, 21 miles. Okay. They called it in for me. And the guys come out.

And, like I said, they're good when they get notified, they come out and try to find the problem. Okay. I didn't think anything more of it. I called it in; they got it fixed. Well, then here comes my December bill and I'm charged for three of these 411 calls that I did not know we could even make.

When we first started out with the first phones, when we were on the eight-party line, you could dial a number and get the time of day and get local information. Those we had the little three digit numbers, but I thought they were long gone. Right now if you wanted long distance, you do the area code, 555-1212, and you get your information.

Okay. So I called and this, like I said, is on my December bill. And my local carrier is MCI for my long distance. And for my local long distance, which I guess there's a difference, is U S West. These were billed to AT&T, these 411 numbers. And I don't

know why, I called AT&T and I told them. They says, "Okay, we'll take them off."

Okay. Then I called U S West and I told them about the problem because this was the day that I didn't have any phone service. And it was 12:47 in the morning, 2:15 in the morning, 11:40 something in the morning, you know, in the morning when a guy is sleeping.

And so, anyway, I called that and then I called U S West and I told them. "Well, we can't fix that," they told me, "they're AT&T charges." And I says, "I'm not asking you to fix the charges. I just want you to be aware of the fact that it's happening." Because, like I said, it was a day that I did not have phone service and still these calls were billed to my number.

Okay. And, like I said, AT&T said they would remove them. Okay. Then I get my January bill, still have the AT&T charges on there for these three 411 calls. Now, I don't know whether there's some paper work time. I haven't given up. And I haven't complained to them because I assume it's probably in the process, my credit coming. And, like I said, it's a lot easier to take three calls at $1.10 than it is 21 of them.

So, like I said, it's not resolved yet, t
haven't taken it -- you know, I'm waiting for the
system to work. And I assume it will because I've
trouble before. There was one other time that I ha
made a -- well, I got charged for a long distance c
that I can't for the life of me figure out who it wa
to, but they said it was a direct dial call. It had
be my call.

So I didn't argue with them because I have
more than just myself that uses my phone. You know,
the family operation, we were there milking cows for
years, you know, and I would have brothers, uncles,
whatever, I guess, brothers and my dad there. So I
couldn't for sure say, okay, this did not -- could no
be my call. And when they told me it was direct
dialed, I just assumed, you know, it had to be direct
dialed.

Okay. The other since that time then, I had
no phone service that day and got these calls. Then
come January of this year, '99, on the third and fourth
I had no phone service for those two days. Now, my da
called it in again. Like I said, he comes down here
near to every day. When he goes home, he called it in
for me.

Okay. So those two days I was without phone

service. I think it was probably 10 o'clock that night and I received my first call. And it's not -- it's kind of like the REA. You check like by flick the switch. You know, yeah, I don't have it. If you don't think of it, you grab the phone to check on something and it's not there. So, you know, exactly when it came on, I can't tell you.

The first call I received was 10 o'clock that night. Okay, so then you know. I figured that's, okay, that's fine, fixed. The 9th, that's five days later here, we go again and pick up the phone and the phone is out again for that day.

And so I called it in. And the guy come out, but there again it was on a Friday. And it seems like we have a lot of this weekend stuff, you know, and then you wait until Monday before they can get somebody out. And that day he came out. And I says, "Well, did you find the problem?" He says, "Well, no, it's working now." Well, I couldn't argue with him, it was working so, you know.

It's this time frame, you know, where it corrects itself. If it's moisture in these boxes, eventually, I suppose, they would dry out and correct themselves. But it still leaves you without a phone, you know. And that was three days out of seven that

particular week.

And as far as the local guys, they come o you know, the repairmen. Last time he was out, I s "Well, what did you find to fix this?" He says, "Well, you know, it's like this, it's an old, obsole system. We can't get parts for them. It's hard to them." Well, I don't doubt that, you know. But whe you've got a tractor or something that you're baling wire together for so long, eventually you have to bre down and buy a new one or do a major overhaul.

So I guess it's not a isolated January last year to November of last year. It's not that. We've fought this for years out there. For a few years, no new system. We don't have any trouble. Odd little things. But this is -- it seems like it's getting worse. You know, like I said 30 years, it might be time to do a little looking.

And other than that, I guess that's probably all I've got on this right at the moment. Like I said, you call them, the guys are very good at coming out when they get the notice. But the fastest and best service I got is when I had the local number; I could call the repairman himself and they could bus out there.

It takes them a half hour if I could call

them. But if I have to go through the main office and they send them out, it can be a day or two. And by then if the problem is corrected, you know, then they don't know where to look. Because unless it's actually broke when they come to look at it, they can't find it.

COMMISSIONER NELSON: Are you finished questioning?

MR. MILTON KLEIN: No.

COMMISSIONER NELSON: Okay. U S West, do you have any questions?

MR. WELK: Yes, I do. I want to get these incidents in my mind.

CROSS-EXAMINATION

BY MR. WELK:

Q. First of all, Mr. Klein, are you related to Milton Klein?

A. He's my cousin.

Q. Now, you haven't filed a formal complaint with the Commission?

A. No, sir.

Q. So the first time that you have brought your matter to the Commission and U S West is today?

A. Right.

Q. Your formal complaint?

A. I didn't bring a formal complaint, unless you

call this testimony formal complaint.

Q. But I'm saying other than the reports to the local people, the first time that the Commission is being made aware of your complaint and U S West is today?

A. Right.

Q. Now, you stated on November 3rd you didn't have telephone service; is that correct?

A. Right.

Q. And you said you reported that?

A. Right.

Q. And when was that repaired?

A. I don't have a calendar on me, whether that was a Friday. It would have been the following Monday, but it seems like it was a Friday, Saturday, because they always tell me it will be fixed by five o'clock on Monday.

Q. So it was repaired within the following Monday then?

A. Uh-huh.

Q. Is that correct?

A. Right.

Q. Now, the 411 calls and the other that you claim that you did not make, have you brought that to the attention of U S West?

A. I've called them. The day I received the bill I called them and told them these three 411 calls were not my calls. We can't do anything about it because they charged it to the AT&T. And I says I'm not asking you to fix it. I just want you to be aware of it because it was the day I didn't have service.

Q. Did they tell you they would remove the calls?

A. They can't because it was to AT&T.

Q. That's what the representative told you?

A. Yeah.

Q. All right. Before you leave here, let's make a copy of your bills and provide them to Colleen Sevela who's here and let her look into that for you.

A. Okay.

Q. All right. Let her make a couple phone calls for you and see what you have. Now, are you aware of any other problems on the billing? I mean you told us about the long distance call, but is the 411 calls that you've talked about, are those the only billing errors?

A. That's the only -- well, I've called them before. They've corrected them. But these are the first I've ever got the 411. Like I said, I didn't know we could dial them on our service even.

Q. All right. Now, in January of '99 you

indicated that you were out of service; is that correct?

A. Right.

Q. All right. And you called it in and then when they came out to repair it, then it was fixed? that what you said?

A. The first time they -- it was like I said. the third and my dad called it in. Okay. Then the next morning my son tried to get me. He's in school, college or school, in North Platte. Okay. When he called that number and it won't go through, then it will ring at my folks's house.

Okay. They got the call and dad comes down "Isn't your phone fixed yet?" And I said, "No." "Why?" Well, they supposedly had it fixed at 11:00 o'clock that morning. Okay. I was there all day working on tax papers and stuff, and I said you grabbe the phone. You don't think about it. You just grab for the phone, use it, and it's not there, so I knew i wasn't working.

And I went and grabbed it when he came down there then and picked it up and it was still dead as could be. He said he could see tracks where the guy walked out to the box at the end of the lane, the driveway, and that's where these little boxes are that

they pull these cards out of.

Okay. He said he could see the tracks there so he knew the guy had been out, but he had never come to the house to see if my phone was actually working. Now, I suppose he tested it out there. I don't know. I didn't have a phone until that night again.

Q. So from when you noticed it you were out of service until restored?

A. It was probably 7:00, 8 o'clock on the 3rd until 10 o'clock on the 4th in the evening.

Q. Now, the number that you got at one time from the local repairman, did he give you that number?

A. Right.

Q. Do you understand that the company cannot give you the names of private homes unless the Court authorizes it?

A. I don't know if it was the private home or the office in town. I have no idea what number it was. It was the number he wanted me to call so he could get out and try to get the phone when it was not working.

Q. Do you understand that the company cannot give out the --

A. I have nothing -- I have -- I know nothing about your policies.

Q. Let me finish my question and you get to finish your answer.

A. Okay.

Q. Are you aware of a company policy that we cannot give out, you know, the home telephone numbers of employees without their permission?

A. No.

MR. WELK: I have nothing further.

COMMISSIONER SCHOENFELDER: Mr. Welk, if he's going to furnish you with copies of his bill, could we have those in the record also?

MR. WELK: Sure, if you want to mark it as an exhibit?

COMMISSIONER SCHOENFELDER: I would at least like them late-filed or something, if it's something that has -- you know, that you're going to deal with, I think it should be in the record.

A. And I've got copies if you want the copies.

(EXHIBIT NO. 16 WAS MARKED FOR IDENTIFICATION.)

COMMISSIONER NELSON: Do you wish to have them admitted?

COMMISSIONER SCHOENFELDER: No, I do.

A. I don't know. She asked for it.

COMMISSIONER NELSON: No objection; right?

MR. WELK: No objection.

COMMISSIONER NELSON: Okay. They'll be admitted.

COMMISSIONER NELSON: Now, staff, do you have any questions?

MR. HOSECK: Yes.

CROSS-EXAMINATION

BY MR. HOSECK:

Q. Randy, I'm looking at Exhibit 10. Are you the R. Klein that's on there?

A. That's me, yeah.

Q. Okay. Secondly, would you look at Exhibit 11 of the questionnaires?

A. Yeah.

Q. Are you the Randy Klein that signed that?

A. That's me.

Q. And did you complete that questionnaire?

A. Yes.

MR. HOSECK: At this time as to this particular part of Exhibit 11, this witness is present subject to cross-examination, has been cross-examined, and I would move that this part of Exhibit 11 be admitted into evidence.

COMMISSIONER NELSON: Is there any objection?

MR. WELK: I need to read it. I just got a of these before beginning. I would just like to take couple minutes to read his, please.

MR. WELK: I don't have any -- I don't have any objections to the admission, but I may have some questions arising from this exhibit.

COMMISSIONER NELSON: So they'll be admitted.

COMMISSIONER NELSON: Are you done, Camron?

MR. HOSECK: I have no further questions.

COMMISSIONER NELSON: Does anyone else have questions?

MR. WELK: I just have a couple questions on the questionnaire.

RECROSS-EXAMINATION

BY MR. WELK:

Q. You indicated in the questionnaire that you were three days out of seven with no service in a one-week period. What period of time was that?

A. That was that 3 through 9 of January.

Q. January of '99. That's what you described in your testimony?

A. Right. I think that's a seven-day period, or eight something.

Q. The no service at all that's elicited, would

that be the times that you've testified to during today?

A. There's been other times, but this is the two. Like I said, I started documenting after, you know, I saw what the complaint form looked like and they wanted substantial documentation that I couldn't provide before.

Q. What you're referring to the notice service at all is what you've testified to today?

A. Yeah.

Q. Correct?

A. Right.

MR. WELK: I don't have anything further.

COMMISSIONER NELSON: Commissioner?

COMMISSIONER SCHOENFELDER: No, I don't have anything further. I think you've answered them all.

COMMISSIONER NELSON: Do you have other witnesses?

MR. MILTON KLEIN: Yes, I do. Call Mrs. Regina Lamoureaux, please.

REGINA LAMOUREAUX,

called as a witness, being first duly sworn, was examined and testified as follows:

DIRECT EXAMINATION

BY MR. MILTON KLEIN: Can I ask her some

questions and answers to her? Is that appropriate?

Q. Who was your employer?

A. Todd County School District.

Q. And what's your place of employment?

A. I'm employed at the Klein School as a teacher aid.

Q. Are you also a customer of U S West?

A. Yes, I am.

Q. Is this questionnaire that's contained in Exhibit 11 with the name of Regina Lamoureaux, did you fill this out?

A. Yes, I did.

Q. And so then these are your bills that are attached to this?

A. Yes, they are.

Q. Okay. Could you please review for the Commission the problems you were having, first of all, with your home service that were referenced in this?

A. Okay. The first thing is the phone that rings and dings or buzzes or whatever. It can happen any time of the day or night. You pick it up and there's either so much static, just static, or it's dead.

Just go through this questionnaire? And then now that has happened, that's been pretty much happened

at the same times that he mentioned he had times from last January through October. And during that time I was charged on these directory assistance usage, there's one for 6.60, there's one for $3.00. And then they kind of -- then I didn't have any for a couple months.

And then July, my July bill, they have -- they billed me for 63 calls at 60 cents per call. Now, my understanding of directory assistance, right, is you call the operator, you ask for a number, right? Okay. 60 calls or 63 calls? There's no way I could have made that. It's a rural area. I don't run a business from here.

Now, I called their 244-1111 number and called to Jake. I've got a note here. He referred me to repairs. Or he said he would call repairs, and they did. They called and said they would do a line check. And they called a little later. I guess I didn't make a note of it.

But they called, it must have been probably the second week in August. A repairman called and said he had gone out and checked the line and he thought that there was moisture in it and maybe they needed to just dry it out. But apparently they did that. I don't know if they did or not because I was -- probably

by the time he did it, I was at work or probably was
home if he stopped.

But those calls pretty much -- or I mean, I
sorry, I'm getting off track. This billing, I haven't
had any more since then, since I called and talked to
the billing department and they sent repairs out. I
haven't had any billing. But the bills they did, what
they did charge me for are still on my current bill as
of the last one, which would have been January of this
year. There's a 47.40 still on the box.

Instead, now I've got neighbors who have had
this happen to them. And one of them called and had it
-- they removed it from her billing. The other one
had to call a couple times and they did remove it from
her billing. I only called once because I assumed they
would eventually get it removed. They still haven't.
Now, I didn't pay the bill. I just deducted it and
paid -- I've just been paying my new charges. But that
47.40 is still basically there.

And that's my main complaint as a customer.
But then as an employee of Todd County School District,
I work at the school, and we have computers. And we
are supposed to have Internet, but we've had lots of
problem with it. It will -- they'll get it up, they'll
get it connected, it will run, the computers kids --

will get on the computers.

They'll run the Internet for maybe five, 10 15 minutes and then all of a sudden it's down. So th wait, you know, wait -- I don't know 15, 20 minutes, whatever, and then the teacher will try it again to g it connected back up so the kids can get on and use it.

COMMISSIONER SCHOENFELDER: May I interrupt and ask you are you talking about the Klein School or the Todd County complex here in town?

MS. LAMOUREAUX: I'm talking about the Klei School.

COMMISSIONER SCHOENFELDER: I wanted to mak sure we knew what you were talking about. Thank you. Go ahead. I just wanted to clarify.

A. Other than that, the billing as a customer, and then for the -- for our school, it's been very frustrating. I know my teacher is very frustrated wit it.

Q. Have you also experienced at the Klein Schoo a similar type of outages and ringing that other peopl have testified to?

A. Uh-huh, oh, yes, yes, I have.

Q. And during what time period was that?

A. That, I can't tell you for sure. It was thi

fall we had an outage for, I think it was most of a day. And we really didn't realize it until I think of the neighbors or one of the parents came to the and wanted to know why they couldn't reach us. And don't remember who it was, but I remember that we w out for most of the day. I'd say three quarters of school day. That's about all I can tell you about that.

MR. MILTON KLEIN: No further questions to this witness.

COMMISSIONER NELSON: You have no further questions; right?

Okay. U S West.

MR. WELK: Just a few, Madam Chair.

CROSS-EXAMINATION

BY MR. WELK:

Q. Ma'am, in looking at your questionnaire, yo indicated in answer to the question, "Is your phone service working satisfactorily now?" You answered, "Right now, yes"; is that correct?

A. Yes, as far as I know, except that I wasn't aware of it, but I thought this dinging that happens a different times of the day, I hadn't picked up, I hadn't answered it and had that happen to me. But I found out from -- I was making this out for -- my

husband has been home during like the last couple months that he's had that happen, but it doesn't happen near as often as it did.

Q. Have you made any trouble report on that?

A. On this last one?

Q. The one that you just described that your husband -- have you made a trouble report?

A. No, I didn't.

Q. I want to go back to your questionnaire and some of your testimony. I wanted to ask you from the period of time of approximately November 1st until today, have you reported any trouble to U S West on your line?

A. November, no, I don't believe so.

Q. The testimony that you were giving other than just a couple minutes ago relate to a time period prior to November 1st, 1998?

A. Uh-huh.

Q. You have to answer yes or no.

A. Yes.

Q. And as I understand the main billing complaint that you have is this 47.40 that was carried over; is that correct?

A. Yeah.

Q. Again, I will give a copy of this to Colleen

Sevold so that she can keep in contact with you and to look into that for you to see if we can't get that corrected. When would you get your next bill?

A. Probably the 15th of February.

Q. Now, the Klein School that you are employed at, are you aware whether they have reported any trouble on their line?

A. Yes, I believe they have.

Q. Have they reported any trouble since November 1st that you're aware of?

A. November 1st, I'm not sure. I couldn't answer yes. I don't really know.

MR. WELK: Okay. Thank you.

COMMISSIONER NELSON: Staff?

MR. HOSECK: Yes.

CROSS-EXAMINATION

BY MR. HOSECK:

Q. Are you being charged any late charges as a result of this, of the amounts that you disputed on the bills, do you know?

A. Yeah, I think I was last month, last month and this month I think I was, but I'd have to look.

Q. Let me go back a little bit to the Klein School situation, the computers that the school has. This is a rural school; is that correct?

A. Yes, it is.

Q. And what kind of computers do they have?

A. Mostly Macintosh.

Q. Are these used for student instruction --

A. Oh, yes.

Q. -- type of thing? And how did this school come about getting these computers?

A. Well, through the Todd County School District, I think every school has received -- they've started with some of the old Apples and they upgraded to Macintosh. And I think the last two we got are iMac's, or iMac's, or something. I'm not exactly computer literate.

Q. Was the school wired into the Governor's program, do you know that?

A. Umm, I think so. I really don't know.

MR. HOSECK: I have no further questions.

COMMISSIONER SCHOENFELDER: I have a couple, Commissioner.

COMMISSIONER NELSON: Commissioner.

COMMISSIONER SCHOENFELDER: The disputed portion of your bill, the portion you don't think you owe, have you informed U S West that you're disputing that?

A. Yes, I did.

COMMISSIONER SCHOENFELDER: So they have now aware? You called a number and told them that you weren't going to pay that?

A. Yes, I did.

COMMISSIONER SCHOENFELDER: Until you resolved something?

A. Excuse me, I didn't tell them, but I did -- there's a copy here of --

COMMISSIONER SCHOENFELDER: I saw that.

A. -- that I wrote to them and told them I didn't think I should pay it.

COMMISSIONER SCHOENFELDER: So it is in writing, so it is obvious that it is a disputed portion of the bill. That's what I was concerned about. And you don't know any more about the school whether -- is there anybody here that could testify whether the school --

MR. MILTON KLEIN: Yes, I have a witness.

COMMISSIONER SCHOENFELDER: Fine. I'll keep my question for the school until then.

COMMISSIONER NELSON: Would you like your questionnaire admitted into the record? It's part of the objected-to part of the record.

MR. WELK: I don't have any more objection.

COMMISSIONER NELSON: So we should go ahead

and admit it. There will be no further questions.

MRS. SHERYL KLEIN: There was one question -- can I pose a question for Reggie?

EXAMINATION

BY MRS. SHERYL KLEIN:

Q. Reggie, could you address the other problems the Klein School has related you and Mrs. Ebke, (sp) the other staff, the concerns that you have?

A. Okay. I guess I just thought that was a given. We're in a very rural area. We have 15 students, and we need the telephone. We need a telephone, a reliable phone. If something happens, it's not very likely because they are supervised, but kids do have accidents. And we want -- we need to be able to get ahold of those parents for an emergency, some kind of emergency service.

Q. Reggie, do you know of instances where the school teacher, Mrs. Ebke, has had to leave the school where she's in charge, leave it to go to another place to make a call because the phone is not operating at the school?

A. Yes, I believe she may have had to do that in this fall when the phone was out. Now, I don't remember the exact dates it was out because I didn't happen to write it down.

COMMISSIONER NELSON: Did U S West have any cross?

MR. WELK: No.

RECROSS-EXAMINATION

BY MR. WELK:

Q. I just have one thing. The complaint that you're bringing here today and the complaint about the school has not been brought to the attention of the Commission in this proceeding until today; is that correct?

A. Right, yes.

COMMISSIONER NELSON: Any other questions?

MR. HOSECK: Nothing further by staff.

A. Can I say one more thing?

COMMISSIONER NELSON: Sure.

A. As far as the emergency, we need the phone for emergency, you know, to call for an ambulance or to call parents; and we also need it in case of a fire. We're in a rural area. There's nothing but prairie around the school. If a fire were to come in here, come in there, we've got three of us with three vehicles but, you know, it might create some problems if we were to try to get those kids out of there before, you know, before a fire.

COMMISSIONER SCHOENFELDER: How do the kids

get to school? Do parents bring them or by bus?

A. The parents.

COMMISSIONER SCHOENFELDER: Okay. So if you have a snow storm and you need to send kids home, you have to notify all the parents individually?

A. Yes. Every time the school is called out, the teacher called every parent.

COMMISSIONER SCHOENFELDER: Thank you.

A. I guess that's it.

COMMISSIONER NELSON: All right. No other questions?

MR. MILTON KLEIN: No.

COMMISSIONER NELSON: Do you have another witness?

MR. MILTON KLEIN: I have two more witnesses. Could I speak to one of my witnesses, how long they can be here?

COMMISSIONER NELSON: Take five minutes.

(AT THIS TIME A SHORT RECESS WAS TAKEN.)

COMMISSIONER NELSON: Okay. We'll go back on the record. And, Mr. Klein, you can call your next witness.

MR. MILTON KLEIN: I would like to call Mr. Robert Anderson, please.

ROBERT ANDERSON,

called as a witness, being first duly sworn, was examined and testified as follows:

DIRECT EXAMINATION

BY MR. MILTON KLEIN:

Q. What's your occupation?

A. I'm a technology coordinator for the Todd County Schools.

Q. Do you work with the computers at the Klein School?

A. Yes, I do.

Q. Could you explain to the Commission some of the problems that they've been having with their Internet service?

A. Some of the problems we've been having with the computers is they're hooked up via modem to some from Klein back into town. They connect to our district through a wide-area network so they can file share, printer share.

And then we also provide them with their Internet service because Todd County is their own service provider. And at the Klein School and the other surrounding schools, the Littleberg School is out in this area, we've been experiencing problems. As Regina said, they stay on five or 10 minutes and then

get to school? Do parents bring them or by bus?

A. The parents.

COMMISSIONER SCHOENFELDER: Okay. So if you have a snow storm and you need to send kids home, you have to notify all the parents individually?

A. Yes. Every time the school is called out, the teacher called every parent.

COMMISSIONER SCHOENFELDER: Thank you.

A. I guess that's it.

COMMISSIONER NELSON: All right. No other questions?

MR. MILTON KLEIN: No.

COMMISSIONER NELSON: Do you have another witness?

MR. MILTON KLEIN: I have two more witnesses. Could I speak to one of my witnesses, how long they can be here?

COMMISSIONER NELSON: Take five minutes.

(AT THIS TIME A SHORT RECESS WAS TAKEN.)

COMMISSIONER NELSON: Okay. We'll go back on the record. And, Mr. Klein, you can call your next witness.

MR. MILTON KLEIN: I would like to call Mr. Robert Anderson, please.

ROBERT ANDERSON,

called as a witness, being first duly sworn was examined and testified as follows:

DIRECT EXAMINATION

BY MR. MILTON KLEIN:

Q. What's your occupation?

A. I'm a technology coordinator for the Todd County Schools.

Q. Do you work with the computers at the Klein School?

A. Yes, I do.

Q. Could you explain to the Commission some of the problems that they've been having with their Internet service?

A. Some of the problems we've been having with the computers is they're hooked up via modem to come from Klein back into town. They connect to our district through a wide-area network so they can file share, printer share.

And then we also provide them with their Internet service because Todd County is their own service provider. And at the Klein School and the other surrounding schools, the Littleberg School is out in this area, we've been experiencing problems. As Regina said, they stay on five or 10 minutes and then

they drop. They stay on and then they drop.

And it's something that modems are more selective than telephones about clarifying the cleanliness of the phone lines. One of the problems when we do have it, what we've tried to do, thinking a different time of day -- say, do not call in certain times. We thought maybe it was our equipment on the other end.

But we have seven schools that are calling in on our system, and I believe we have five that are running in town through Golden West lines, and they're staying on beautifully throughout the day. They haven't bumped. They rarely have a disconnect. But the ones that are out on, say, the U S West lines are coming off, maybe staying on 10 minutes and dropping.

And it's hard because of the schools relying on the Internet as one of their valuable educational resources. We've tried to make other means for them to come in to us by using 56 kilobyte modem lines, because the schools are costing us about 30 cents a minute to keep them on the phone, and they'll stay on between four and eight hours a day. Granted, the disconnects have made phone bills cheaper because they're not staying on as much so you know, there's a by-product. Thank you.

Okay. And then we've had schools come in with about -- one school come in with a $3,700 phone bill. So what we have is the 56 kilobyte lines. The brought us down to $1,000 a month to have them installed.

And we went with the South Dakota Network out of Sioux Falls. We ordered them in October. And as we kept going with South Dakota Network and saying, "What's the matter, what's the matter," the final thing was, "We're going to cancel your lines," they said, "because U S West owned that territory and the circuits can't accommodate those lines coming in."

And they said what happened is that -- this is kind of hearsay by their part, so please correct me if it's wrong because they'll definitely have the lines put back in. And what they had said was the circuits can't accommodate it and they can't make the upgrade to do it.

For example, we had similar lines put into Golden West, but Golden West is making the upgrades and making it possible to have them. And it's something that also you should be getting the school wired and getting them on line because again it's a resource for them and that's the upgrade problem is with the lines and we've had those since I started the job in July.

And, you know, now in the summertime the school isn't in session. But since September we've been having the disconnect lines. But I would probably say since about the first of year they've gotten significantly worse. And we see the school about once a week we go out there and service them and that was a common complaint that the internet is dropping off very badly.

And it's a bank of 12 Macintoshes, if you're familiar with the type of computers they are, Macintoshes, and they are worth a few general outlay funds and grant funds and things like that. So they're varying in age from one that's, I believe, four years old to one that's probably four months old as far as the age of the computers.

MR. MILTON KLEIN: I have no further questions.

COMMISSIONER NELSON: That completes your testimony? Does U S West have questions?

MR. WELK: We would.

CROSS-EXAMINATION

BY MR. WELK:

Q. Just your testimony until right now has never been a part of the record in this case?

A. That's correct.

Q. So the first time U S West is hearing this and the Commission is today from you right now?

A. And the Commission as well, correct.

Q. How far are these schools that you have between Todd County and the schools that are served by Golden West, the distance, the geographic distance?

A. The geographic distance would be -- without looking at the odometer?

Q. Let's talk about the Golden West office to the schools.

A. Okay.

Q. The schools, other than the Klein Schools, how far is it from the central office to Golden West to those schools?

A. The central office to Golden West to Klein School is 19 miles, or probably 18 miles. We're logging it from town, so I believe that's 18 miles. Littleberg School, I believe it comes out at -- I'm going to give you a ball park, probably 27 miles. To the Lakeview School, I'm going to give you another ball park figure, probably 30 miles, I believe. And from Mission, the farthest school that we have covered by Golden West under the 56 kilobyte line, I believe, comes in at 26 miles. So I don't know if it's -- how you can do it.

Q. Why don't you give me the name of the schools that are served through Golden West and where they're located?

A. Spring Creek School, which is located in Spring Creek, just outside of St. Francis. And then there is -- okay, then there's Rosebud Elementary, which is located in Rosebud. Okay? Then there's Okreek School, which is located in Okreek approximately 16 miles outside of Winner.

Q. I grew up in Winner so give me the names.

A. Thank you. And then there is He Dog School.

Q. That I don't know where it's at.

A. Right outside of Parmelee, yet farther out the other beaten path. And then there's the in town I believe one of -- the fifth is the Mission School because it has to have one coming in to it. And I may have missed one.

Q. You've got five, Spring Creek, Rosebud, the Okreek, He Dog, and the Mission School.

A. That's correct.

Q. That's five. Then the two that you've talked about, the Klein and the Littleberg?

A. Klein and Littleberg and Lakeview. We put in the call to have the 56 kilobyte line installed in October. And I'm not sure if U S West covers Lakeview

or not. I believe someone said there was -- they di
or they didn't, so I never got a straight answer the

Q. So Klein, Littleberg, and Lakeview, you believe, are U S West, in U S West territory?

A. That is correct. I was told that Klein and Littleberg definitely are, but then someone had said that possibly U S West was going to acquire from Great Plains Lakeview.

Q. So that you don't know?

A. Right. The closest we got to Lakeview was first they said they would do it and then they said the ground is frozen so they told us to wait to spring.

Q. Spring Creek, Rosebud, Okreek, He Dog, and Mission are all schools located in Golden West territory?

A. That's correct.

Q. And Spring Creek and Rosebud, are they all -- strike that. Are all those schools served out of the Mission office of Golden West?

A. I don't know. I went through -- I initially made the order through Wall, and then I've been working with a Mission office person through Golden West so I would probably --

Q. Are there orders pending for the Klein, Littleberg, and Lakeview Schools with U S West?

A. How we go through it is we order the lines through South Dakota Network, who in turn brokers then through Sprint. And their Sprint person is hoping that U S West was about to put a cancel order in to them about it because of lack of availability of the circuits.

Q. And so all you have is hearsay through about three people is what you're telling me on those orders?

A. I also have an open bill for $12,000 for the lines, too, through South Dakota Network, yes.

Q. You've got a bill, but have you talked directly with U S West or not?

A. No, I have not.

Q. You've been going through South Dakota Network?

A. They're my person.

Q. You're the customer of South Dakota Network?

A. That's correct.

MR. WELK: That's all I have.

COMMISSIONER NELSON: Commissioner?

COMMISSIONER SCHOENFELDER: I don't think so at this time.

COMMISSIONER NELSON: Staff?

CROSS-EXAMINATION

BY MR. HOSECK:

Q. Mr. Anderson, just in simplistic terms, t
get to the Klein School, to get computer service, i
necessary to use the U S West system?
A. As far as the phone system?
Q. For the computers.
A. To get them Internet, yes, it is.
Q. So, in other words, would this be the same
line then that the people have been testifying to ha
today they've had problems with?
A. Yeah, if it's the second phone line that's
been put in the school is all it is.
MR. HOSECK: That's all the questions I hav
COMMISSIONER SCHOENFELDER: I have a couple
and I don't think they're pertinent to this case. Bu
is your school system part of the state system that
would be subject to the master contract with the state
of South Dakota?
A. We are, as far as the district as in the
master contract?
COMMISSIONER SCHOENFELDER: Yeah, for
telephone service.
A. I believe we would accompany it because we
were part of the wiring the schools project.
COMMISSIONER SCHOENFELDER: But you don't go
through the master contract to contract for your phone

services, you go through the South Dakota Network, so you have another vendor other than the State of South Dakota doing the master contract?

A. I think I would probably not be able to give an answer on that.

COMMISSIONER SCHOENFELDER: I'm stumbling.

A. The reason we went through South Dakota Network, though -- I can help you on that one. The reason we went through the South Dakota Network is because those are the three schools, Lakeview, Littleberg, and Klein, are served out of a Nebraska office. They're considered to be an out-of-state school.

And what happened with it is Golden West first of all said that they would not be able to cover the service, and if they did, it would probably be an exorbitant price of say 2,500 or $3,000 or more. So by going with South Dakota Network they were able to bid the contract out to Sprint, who is, I believe, a more global carrier, and they were able to trim the price down. Example: A local kilobyte line costs $125 a month as opposed to the other $1,000 a month.

COMMISSIONER SCHOENFELDER: That's really an aside for the performance part.

COMMISSIONER NELSON: Does that conclude your

testimony?

A. Yes.

COMMISSIONER NELSON: No other questions? You can call your next witness.

MR. MILTON KLEIN: I would call Pat Baker.

PAT BAKER,

called as a witness, being first duly sworn, was examined and testified as follows:

DIRECT EXAMINATION

BY MR. MILTON KLEIN:

Q. I have a questionnaire in Exhibit No. 11, Pat. Is this -- did you fill this out?

A. Yes, I did.

Q. Would you like to care to explain to the Commission what your phone service has been like?

A. Well, most of it's -- when you listened to Randy Klein, about the -- a lot of same type of problems. We've had over the years ringing, nobody there, a lot of buzzes in our phone, static.

In fact, you called me Monday morning, he told you earlier in the testimony. I was the one he called. And I picked up my phone and it was buzz and he was -- I couldn't hear anything at all, so I hung it up. And later on he called; it was good. About noon he called me.

Before I came today, at 12:30, my son from Chadron State College, called me. He was talking, static, and all of a sudden it did that real loud buzzing, and I lost him, so I hung up too.

Let's see, what else? Same thing about taking so long to get -- when you have to call the main office, it does take them a long time, it seems like, to get your service fixed. But when they fix it, they do get out, and they're good people to work with.

My stuff is pretty much the same as Mr. Klein earlier had about the fire emergency reasons and business use. We have a ranch out there, so we do our business from home. And we just would like to have a dependable phone.

Q. Would you like this questionnaire entered into the testimony?

A. Yes.

COMMISSIONER NELSON: Are there any objections?

MR. WELK: I have no objection.

COMMISSIONER NELSON: It will be admitted.

MR. MILTON KLEIN: I have no further questions.

COMMISSIONER NELSON: U S West have any questions?

MR. WELK: Yes.

CROSS-EXAMINATION

BY MR. WELK:

Q. Could you tell me where you live on that map? I guess I'm trying to find out where you live, ma'am.

A. (Witness indicating.)

Q. You're under the map under the Bryan and above Whiting; is that right?

A. Yes, sir.

Q. Now, were you listening when I asked some questions to Mr. Randy Klein about have you seen any difference in the service from approximately November [illegible] until this last incident that you had today?

A. Just our normal scratchy noise more than anything. And I didn't bring my paper, but I did have two of those long distance phone they're --

Q. The 411 calls?

A. Mine went to AT&T, was our carrier. I just called them and they said, "Okay, we'd give you credit," and they did right away. That's the only thing. I haven't had the 411 on my bills.

Q. What I want to ask about your service, though, because you'll hear testimony later from U S West, I want to talk about the period from

approximately November 1st until today. All right? First of all, you never filed a complaint with the Commission, have you?

A. No.

Q. Today, again, is your first time that you brought any problems you've had to the Commission; correct?

A. Yes.

Q. Have you reported trouble to U S West?

A. Over the last years?

Q. Yes.

A. Yes.

Q. Have you reported any trouble since November 1st until today to U S West?

A. No.

Q. So the company records should show there's been no reports to them from you regarding your phone; is that correct?

A. That's right, yes.

MR. WELK: I have nothing further.

COMMISSIONER NELSON: Staff?

MR. HOSECK: Nothing from staff.

COMMISSIONER NELSON: Commission?

COMMISSIONER SCHOENFELDER: The only thing I'd like to ask you is the most important thing you

want here is just good reliable phone service?

A. Yes, that you can talk and get some answers.

COMMISSIONER SCHOENFELDER: Thank you.

COMMISSIONER NELSON: Do you have any other witnesses?

MR. MILTON KLEIN: No, ma'am, that's all I have.

COMMISSIONER NELSON: JoAnn Klein will be next.

JOANN KLEIN,

called as a witness, being first duly sworn, was examined and testified as follows:

DIRECT EXAMINATION

MRS. JOANN KLEIN: This is where I live (witness indicating.) We live about four blocks from where Milton -- you might say where Milton's have. And we are the tag end of that spur. The phone comes in from his house and then down to ours and then that's it. So any time he has problem, or the phone in his area, we also have.

And this is a format of a letter I wrote to the Commissioners -- I re-did a little bit of it -- for an example of our situation and my problems. Excuse me, sir, anybody else? (Handing out exhibit.)

My husband, Cliff, and I are both in our

seventies. We decided to spend our retirement years at home on the ranch. The major factors were the love of our land, the nearness of our son Milton and his family, and dependable electric and phone service.

Both Clifford and I have had major medical problems. I've had heart bypass; he's had several strokes. It is essential that we have access to emergency help. Although Milton lives fairly close, we have to get to him and that would be by phone, so we need dependable phone service.

This past year our phone service has not been dependable. Had I known that the outages would become increasingly frequent and that we would have to resort to the Public Utilities Commission for help, I would have logged more events.

One especially horrible session I am describing on here: On Friday, September 25th, we had a light rain shower. Saturday morning I was awakened by the low level ringing of our phone. No one was on the line. Went back to sleep at 5:30. The phone rings. I got up and heard, "I'm sorry, but your call cannot be completed as dialed. Please hang up and call again." Well, I hadn't called anybody. Then every five minutes the phone started ringing, but I ignored it.

8:30 I made a long distance call. On Saturday is when we call our various relatives to visit. And we got a call at 9:15. No one was on the line. 9:00, it was a chopping ring. No one was on the line. I tried to call out, but now the line was dead.

Sunday morning, 1 o'clock in the morning, awakened by a single loud ring. No one on the line. It repeated again and again every five minutes. I think that's this billing here, is the seven bills, again, for which we were billed. I've got some more back there.

MR. WELK: Can we identify for the record what we're getting, exhibits, what numbers these are?

MR. BULLARD: The statement would be Exhibit 13.

COMMISSIONER NELSON: And the phone bills would be Exhibit No. 15.

MRS. JOANN KLEIN: So all that night every five minutes the phone was ringing. I got up and went and put pillows over the phone and couldn't sleep. At 7:30 my husband was up. He answered the phone and heard U S West, "This is," someone's name, "how may I help you?" The line went dead before he could respond, and then it went on and on and we had various rings, various names. At eleven o'clock a Tweety bird ringing

was stopped and the phone seemed to be working. Sunday afternoon our son, who lives in Texas, calls every weekend, said he had been trying all morning to reach us with no luck. "Where were you?"

On October 1st, after a number of calls for service had been made to U S West, most of the service calls were made -- our phone was out so Milton knew about it and so Sheryl would call, or he would go someplace or call. He would handle it for us. So we didn't bother to make a service call too.

Then a repairman and his supervisor spent one afternoon working on our lines, Milton and ours. They stopped at the house and said, "We think we've got it fixed." Clifford was sitting in his chair. He picked up the phone; the phone was dead. He worked on phones when he was in the service; and he said, "You got a short somewhere, fellas."

And they returned then Friday, the 2nd, and spent all day working. They called Friday afternoon and said he thought he had found and fixed our problem, a connection, instead of having a cap, had a plastic sack similar to a garment bag wrapped around it. When it rained, moisture apparently leaked in.

He asked us to call him Monday. He gave us a phone number, as Milton -- sometimes he gave him a

number. He said, "Call me Monday and tell me how things are going."

All right. On Saturday, October 3rd, the phone was emitting strange pinging noises. No one on the line. Late that morning, Saturday again, our son called from his home in Texas, and the connection was good. However, by noon the phone had reverted to its funny business again. Most of the time it was dead. The rest of the day we were unable to call out or receive calls.

Your records should show, but I estimate that this past year we've had at least two outages a month. They occur most frequently when it snows or there's snow melting. At times the phone is dead; at other times we've been unable to call out. We've had long distance calls both called in and out cut off. We've been billed for numerous calls we did not make -- I've heard 411 lots of times this afternoon -- and services we did not use. At times have been static so bad we couldn't understand the caller or they us.

Each time we've been out of service for at least two days. Repairmen have told us the problem is the box five miles south of you. That's by Mrs. Lamoureaux, this. The problem is with the line coming into your place from the north and so forth. I

conclude that problems have been all of the above and more.

For Clifford and I, dependable phone service is critical. A year and a half ago I fell at home, injured my back, and we had to call for an ambulance. The phone was working that day. We frequently call our druggist for renewal of prescriptions to be mailed out to us 45 miles from Winner; about that far from Valentine. Clifford takes a blood thinner medication that requires a blood test every three weeks. It takes 48 hours for this test to be sent away and to be read and for the doctor to get back to us. The doctor then calls Clifford with directions for adjusting his medication.

A fire was mentioned today. We depend upon each other. Patsy Baker forgot to say the last fire in the neighborhood they called because it was an electrical fire and hay bales were afire just north of where we live.

What we want from U S West is repair or replacement of the problem lines without delay, and we want credit for phone bills not made but for which we have been billed and credit for those days which we did not have service, or for which service was sporadic.

After this interesting weekend I saw this in

the Omaha World Herald, and I would like to have it admitted as evidence. (Exhibit 14) I will send you an extra U S West advertisement. And I think there's a question concerning truth in advertising. That was my opinion when I read that.

Any questions?

COMMISSIONER NELSON: Any questions?

MR. WELK: Yes, I do.

A. Yes, sir.

CROSS-EXAMINATION

BY MR. WELK:

Q. Have you ever had an emergency where your phone didn't work?

A. No, thank God.

Q. Let's talk about your 411 calls. Have you told U S West that you want these removed from your bill?

A. My husband, who pays the -- writes the checks for those, has. And some of them, you notice on one of them it said it paid, but they have not all been paid. We have not received credit for all of them.

Q. I'm having a difficult time understanding. Have you received credit for some and others you have not?

A. That's right.

Q. Have you withheld payment from your bills for the calls you don't think you made?

A. Milton, did he?

MR. MILTON KLEIN: Can I answer that? According to my father, he has, and he claims that some of them he hasn't been reimbursed for.

Q. We're going to give these to Colleen Sevold and see if she can contact and find out whether you've received credit or not.

A. Thank you.

Q. All right?

A. Yes.

Q. Have you made -- when you've had trouble on the line, I want to talk about that. Have you called U S West?

A. Well, sometimes I have, especially the billings. But how can I call U S West when I got to go to one of the neighbors and one of the neighbors -- my closest neighbors is my son and his phone is out too.

Q. Have you attempted at any time to report trouble on your line to U S West.

MR. MILTON KLEIN: Can I speak?

Q. Let her answer first and then we'll -- just yes or no?

A. No. When there's trouble I can't use the

phone so how can I report trouble?

Q. But sometime -- well, I want to talk about, first of all, since November 1, '98, to today, have you had any problems with your line?

A. Was that when they came up and dug up yous yard the last time?

MR. MILTON KLEIN: November 3rd was when we talked on the phone to the Commission, had the phone conference to this issue.

A. I don't think we've had major problems since then.

Q. Have you reported any problems since November 3rd?

A. Not that I recall.

Q. When you have had problems -- and most of the problems you're talking about occurred *before*, then, the November 3rd hearing date; correct?

A. Yes.

Q. All right. And I understand did you have phone outages at times?

A. After that date.

Q. No, before that. You've told us you didn't have anything after. Now I'm going back to where November 3rd.

A. Oh, yes.

Q. Where you were completely out of service?
A. Yes.
Q. When was eventually your service restored?
A. Well, very often it happened like on Friday, then it -- they didn't come out until Monday.
Q. But was the service, when you're out, restored the following Monday?
A. Yes.
Q. You reported then in those instances, otherwise they wouldn't have known you were out?
A. They have been reported if Milton had called in and said our phone was out, they automatically knew ours was too.
Q. Did you make any reports prior to November 1st, 1998, other than for outages of phone?
A. Yes, I've talked about billing and the Denver office can't understand, "well, that's a South Dakota area code, you live in Nebraska, what's going on," you know. It kind of got --
Q. Well, the billing we'll get straight. I want to know about your phone service prior to November 1st. All right, other than billing and other than the fact that when you didn't have service. Did you report to U S West the scratchiness on the line or anything that you've testified to or put in your statement?

A. I don't recall much scratchiness. It was either out or it was these strange rings that eventually was part of being cut off. When it was working, the quality was satisfactory.

MR. WELK: I don't have anything else, ma'am. Thank you very much.

COMMISSIONER NELSON: Would you like the Exhibits 13, 14, and 15 be placed on the record?

A. I would.

MR. WELK: No objection.

MR. HOSECK: No objection.

COMMISSIONER NELSON: They will be admitted.

COMMISSIONER NELSON: Staff, do you have any questions?

MR. HOSECK: No questions.

COMMISSIONER NELSON: Commission?

COMMISSIONER SCHOENFELDER: I have a little bit of one. Your phone is like an extension on your son's, or it's just on the same line?

A. It's on the same line, but the line comes into his place, comes down to our place, then it stops. We're kind of a dead-end, you might say.

COMMISSIONER SCHOENFELDER: But it doesn't ring at his house and your house at the same time?

A. No, ma'am.

COMMISSIONER SCHOENFELDER: That's what I wanted to know. Thanks.

COMMISSIONER NELSON: Do any other parties have questions?

MR. MILTON KLEIN: I have a question. When your phone is out, do you -- and I report the outage, do you assume that that also includes reporting your outage?

A. Yes.

MR. MILTON KLEIN: Okay.

COMMISSIONER NELSON: Any recross?

MR. HOSECK: No.

MR. MILTON KLEIN: Lawrence Klein.

LAWRENCE KLEIN,

called as a witness, being first duly sworn, was examined and testified as follows:

DIRECT EXAMINATION

(EXHIBIT NO. 17 WAS MARKED FOR IDENTIFICATION.)

COMMISSIONER NELSON: Go ahead.

MR. LAWRENCE KLEIN: For the sake of taking up time, I think people can read this. And as far as I'm concerned, we've had lots of trouble prior to your November 3rd report, but since then I don't think I've had any.

But I've reported my son's outages several times. I get the job of doing that. I think that's probably all I got to say other than what you've got in front of you.

COMMISSIONER NELSON: Does U S West have any questions?

CROSS-EXAMINATION

BY MR. WELK:

Q. And I appreciate you trying to save time. We can read. The report you said about your son's phone, have you had -- have you made any report since the November date?

A. Yes, yes.

Q. That's Randy?

A. Right.

Q. So it's the same thing he's testified about?

A. Right, right.

Q. Have you had any times when you couldn't make a phone call in an emergency?

A. I don't believe so, no.

MR. WELK: I have nothing further.

COMMISSIONER NELSON: Staff?

MR. HOSECK: Nothing from staff.

COMMISSIONER NELSON: Commissioner?

COMMISSIONER SCHOENFELDER: I don't think

so. I think this statement kind of covers it. You don't have anything further to add?

COMMISSIONER NELSON: Other parties, do you have any questions?

MR. MILTON KLEIN: No.

COMMISSIONER NELSON: Do you want to enter Exhibit 17 into the record?

MR. LAWRENCE KLEIN: Yes.

MR. WELK: No objection.

MR. HOSECK: No objection.

COMMISSIONER NELSON: It will be entered.

Okay. I guess we'll move on to Margaret Figert.

MARGARET FIGERT,

called as a witness, being first duly sworn, was examined and testified as follows:

DIRECT EXAMINATION

MS. FIGERT: I have little to add, and I'll also save time.

I moved to this area in 1982 and am the last hookup for U S West. The neighbor immediately to the north of me is hooked up to Golden West. I've reported numerous outages. And I think probably because of the nature of the business I'm in, I probably have a little thicker hide, I didn't write any of it down. I just

figured I'll report it, it will work, and it would
a day or two.

We leave home frequently at 7:00 in the morning. We don't get home until 11:00 o'clock at night. If I don't have phone service, I don't even know it.

Weekends were troublesome. We moved off the place in 1987. Moved back out there in 1995. The reports that I made to the central office, I think, were in Des Moines; and they sent the repairmen out from Valentine consistently. I was always warned that any wiring problems inside my house would be my responsibility and my cost. Repairmen never found any inside my house. They were always at junction boxes. They were repaired.

The only problem I've had since November was being cut off in the middle of a phone conversation. And, again, I should have a little thinner hide. I should record this stuff, I guess. I just redialed and finished my conversation.

At one point prior to November 1st, right after I moved back out there in 1995, I was on a phone conversation, a modem to modem over the Internet with my granddaughter. It took 12 telephone calls to finish the conversation. I paid the bill.

I have complained periodically to U S West. They have responded. They have responded. But the static, the scratchiness, the outages are real, and were fairly consistent up until last fall.

My involvement in this is probably because I figure come spring, we're going to have problems again as soon as the ground thaws and things get wet. I have the advantage of when we have an outage, driving into my office in town in Mission and reporting the problem from my phone service in Mission at my office, which is hooked up to Golden West.

I would dearly love to work part-time, which means taking the Macintosh laptop that I own home and doing my typing while I'm also making pumpkin pies or whatever, and then transmitting that data to my office to the other McIntosh so that the type-setter can finish setting the type for matting the stories and getting them ready for the printer. I can't do that, obviously. I don't know that my life is necessarily suffering because of it, but I'd love U S West a whole lot more if I could.

I would like to enter into an exhibit a photocopy I made. I have Golden West's territory, which shows clearly where they do not have territory, and that is our area.

COMMISSIONER NELSON: Is there any objection?

MR. WELK: Can I look at it first, please?

(EXHIBIT NO. 18 WAS MARKED FOR IDENTIFICATION.)

COMMISSIONER NELSON: Where are you at on this?

A. My guess is in that white area at the bottom center area of the map between the gray and the black. As I suggested in my complaint, I would like to see U S West either sell out to Golden West or, you know, invest some money into this system.

One more thing, this happened twice. I had bills from both U S West and MCI for identical phone calls made to the same person, same date, same time. Reported it to U S West. They kind of -- it was not their problem, when in fact it was. Because MCI was supposed to bill me for those calls, so I called MCI. They were the ones who should have billed me and whom I should have paid. They took it off my bill and satisfied the checkbook so I didn't go any further with it and actually I should have paid MCI for it when they gave me credit, for U S West didn't want to give me credit for it. And, again, I didn't record it. I was satisfied. I thought that's all it would take. It

hasn't happened since.

COMMISSIONER NELSON: Does that conclude your testimony?

A. I think so.

COMMISSIONER NELSON: Does U S West have any questions?

MR. WELK: Yes, Madam Chair, I do.

CROSS-EXAMINATION

BY MR. WELK:

Q. Is it pronounced Figert? Is that your last name?

A. Right.

Q. I gather you work for a newspaper. Is that what you do?

A. I try.

Q. What is your -- for whom do you work for and what's your position?

A. I'm the owner. I work for myself.

Q. What's the name of the newspaper?

A. The Todd County Tribune at Mission and the Mellette County News at White River.

Q. You filed a complaint in this action with the Commission after the November 3rd conference call; correct?

A. Yes.

Q. Did you have a complaint on your service or strike that. Since November, approximately November 1st, 1998, to the present date, have you had any trouble with your phone service?

A. I was disconnected in the middle of a phone call on two different occasions.

Q. When was that?

A. I believe one was in November. I think they were both in November, later on in November.

Q. Did you report that as a trouble report?

A. No. I re-dialed and got back on line. I was happy.

Q. Was that a local or long distance call?

A. Long distance.

Q. So as far as U S West records would reveal, then since November 1st is there wouldn't have been a report on your trouble line?

A. There shouldn't be, no.

Q. Let's talk about 1998, prior to November 1st, 1998. Did you make any trouble reports prior to that date to U S West?

A. Yes.

Q. For your phone service?

A. Yes.

Q. How many did you make and what were the

nature of the complaints?

A. I don't remember how many I made. Five, six, seven, eight. The nature of the complaints were outages.

Q. Were you completely out of service?

A. Yes, sir.

Q. And for what periods of time?

A. Weekends were particularly troublesome. I would be out definitely on a Friday and then would wait until Monday for service to be restored. Times during the middle of the week, again, sometimes we'd leave at 7:00 in the morning; we don't get home in the evening until 8:00 at night. If we didn't have phone service that day, I wouldn't know it. But the times I do know of, yes, I do report them.

Q. I was trying to listen. You said you moved back in the area in '95?

A. Yes, sir.

Q. So you've resided continuously at the place where you're talking about for phone service since 1995?

A. Yes, sir.

Q. Did you see these outages that you were describing in 1998 -- was there a particular time of the year, or was it from essentially the beginning of

the year prior to November 1st?

A. No, not essentially from the beginning of 1998. It was prior to 1998.

Q. Was there a particular period of time? Was it a fall or winter?

A. Spring, spring.

Q. Spring of '98 that you had these outages?

A. As the ground thaws, yes.

Q. Maybe I misheard you. Was this the spring of '98 that you reported these outages or prior to '98?

A. Both.

Q. So you had --

A. Definitely prior, definitely prior.

Q. In '98 or the prior year?

A. From 1995 to 1998 I've probably reported five to eight outages.

Q. Thank you. And then now during 1998, prior to November 1st, how many reports of outages did you have?

A. I don't think any, not very many, maybe one.

Q. So if the company records for the calendar year '98 should show maybe nothing or one report of trouble --

A. I would assume that's correct.

Q. And so the outages you were talking about

essentially would have been this '95, '96, '97 time period?

A. Yes, sir.

Q. And I take when I read your complaint, are you saying you want to be a Golden West customer?

A. That's a loaded question.

Q. That's a simple question.

A. Will you sell to them?

Q. I can't answer your question.

A. I can't answer those questions. They can buy you out.

Q. The question is what do you want to do? Do you want to be a U S West customer or Golden West customer?

A. Right now today I would rather be a Golden West customer unless you have better service.

Q. Do you know there's a process for you if you want to be served by Golden West?

A. I am not aware of that process.

Q. We'll have a little bit of explanation. You happen to be a little bit out of the exchange boundary. You're a little different than the rest. Mr. Peters will explain that to you. I just wanted to make sure that if it was legally possible to do so, you would be rather be served by Golden West?

A. Absolutely.

Q. How close is the closest neighbor you have that's served by Golden West?

A. About a half mile.

Q. Which direction?

A. North.

Q. So you want to turn around and see that exhibit that's behind you? I think it's Exhibit 3, that kind of green map. It says Figert over there; is that approximately where you live?

A. Correct.

Q. So the neighbor you're talking about would be north of that?

A. That's right.

Q. About a half mile?

A. Correct.

Q. And who is that neighbor?

A. Mike Osmond. (sp)

Q. He's served out of Golden West?

A. Yes, he's the last.

Q. He's served out of what office, do you know?

A. Wall and Mission.

MR. WELK: I have nothing further.

COMMISSIONER NELSON: Staff?

MR. HOSECK: Nothing from staff.

COMMISSIONER SCHOENFELDER: I don't have any questions.

COMMISSIONER NELSON: We did admit this, didn't we?

MR. HOSECK: I would move admission of Exhibit 18.

MR. WELK: No objection.

COMMISSIONER NELSON: It's admitted. Do other parties have questions? None? Now it's U S West.

EDWARD A. PETERS,

called as a witness, being first duly sworn, was examined and testified as follows:

DIRECT EXAMINATION

BY MR. WELK:

Q. Would you please state your name.

A. My name is Edward A. Peters.

Q. Mr. Peters, where do you live?

A. I live in Littleton, Colorado.

Q. By whom are you employed?

A. U S West Communications.

Q. How long have you been employed by U S West Communications?

A. Almost 27 years.

Q. And generally what has been your work

experience with U S West?

A. I have worked the entire time in the network department, or related network type jobs, including engineering for outside plant, cable plant, carrier systems, as well as central office transmission equipment associated with supporting the outside plant and also the interoffice facilities.

Q. Do you have a formal engineering degree?

A. I do.

Q. In what type of engineering?

A. General engineering from Oregon State University.

Q. And for the 27 years network, you have worked in the central office as well or designing central offices?

A. I have designed some of the transmission equipment that goes into central offices.

Q. And you're familiar with what's called plant for U S West?

A. I am.

Q. What does plant mean in U S West parlance?

A. Plant refers to the physical facilities that we use to provide telecommunication services.

Q. Have you worked in network planning for U S West as part of your job responsibilities?

experience with U S West?

A. I have worked the entire time in the netwo department, or related network type jobs, including engineering for outside plant, cable plant, carrier systems, as well as central office transmission equipment associated with supporting the outside pla and also the interoffice facilities.

Q. Do you have a formal engineering degree?

A. I do.

Q. In what type of engineering?

A. General engineering from Oregon State University.

Q. And for the 27 years network, you have worke in the central office as well or designing central offices?

A. I have designed some of the transmission equipment that goes into central offices.

Q. And you're familiar with what's called plant for U S West?

A. I am.

Q. What does plant mean in U S West parlance?

A. Plant refers to the physical facilities that we use to provide telecommunication services.

Q. Have you worked in network planning for U S West as part of your job responsibilities?

A. I have worked in the portion of network planning associated with the outside plant, which is the facilities between the central office switch and the customer.

Q. And you're here as a technical witness regarding the facilities that have served these complainants in this action?

A. Yes, I am.

Q. Let's talk a little bit about what you've done in preparation for the hearing. First of all, have you driven the facilities route from the central office to the complainants' residences?

A. I have.

Q. What else have you done in regard to the review of the facilities?

A. When we received the complaints, I directed others to research the facilities in that area and to provide diagrams that would be useful in helping me to understand the nature of the exchange for this portion of the route, the facilities that serve the customers, and also the geography associated with the area, and the distances that's involved between our central office and the customers. I also learned about the carrier systems, the number and quantity, and the number of workers working in this area.

I have talked to the supervisor of the installation and maintenance crew, and I've talked to the installation and maintenance technicians who work the Valentine area. And I also met with them, and we drove the route, and I talked to them about the problems that they know from their perspective in that area.

Q. Have you reviewed the trouble reports that S West has?

A. I have.

Q. And what is a trouble report?

A. A trouble report is a record of calls that we received from people on their service or on another service; and we try to keep a record of those calls, what the nature of the complaint was, and what was done to resolve the complaint.

Q. Has there been any testing of the lines or the facilities that we're discussing here today?

A. There has been testing on an ongoing basis as part of the resolution of trouble complaints. That is a part of the repair process.

Q. Well, let's talk about the types of tests that are available. Have there been some preliminary tests that have been done on the line?

A. We have done some testing to check and see

what the service level of qualities are, or the quali
of the carrier itself for the customers associated wi
these complaints.

Q. And when were those tests conducted?

A. Those tests were conducted last fall, the last time we had a major repair out there, as well as more recently, although I don't know the dates.

Q. Within the last month?

A. I believe that some of the testing has been done in the last month.

Q. And what type of tests are conducted?

A. Well, the type of tests associated with the carrier is to make sure that the signal levels that ar available to the end terminal where the customers drop would be connected; that those signals are coming in within the designed parameters for the carrier.

Q. What are the design parameters for the carrier system that serve these customers?

A. Well, there's many parameters. The signal needs to be regenerated when it falls below a -35 dB, although there's a 5 dB tolerance in there. And then the end user needs to be within that limit less than minus 35 dB loss.

Q. And what do the tests show about the signals to these customers today?

A. To the best of the knowledge of the technicians who I've talked to about the services and in this area, they believe that those services are falling within that parameter currently after they did some major repairs last fall.

Q. Let's talk about are there anticipated to be other tests of these facilities beside these tests of the signals?

A. Yes. I've already contacted the junction supervisor and the installation and maintenance supervisor. Actually, I worked through the maintenance supervisor and he's contacted the construction manager for the area, and we have gotten a commitment out of the construction manager that he will make available his specialists that resolve these kind of problems to go out and look at the physical cable plant and try to identify any defects in the physical plant, which means the cable itself, that might need to be repaired. And they will be starting that work next week. And we will also be doing additional carrier testing, although that will be done at the conclusion of the physical plant being analyzed.

Q. Let's try to help some of the people in the room with what the facilities look like. We know in the central office there's some switches in there, is

that correct?

A. Correct.

Q. And what do you call those switches that ar there that serve these particular people? What type switches are they?

A. In Valentine we have an Erickson switch. I is a voice grade switch that serves all of the customers in the Valentine Exchange.

Q. And Erickson is the name of the manufacture of the switch; correct?

A. Correct.

Q. Now, when we drive down the road we see boxe and white boxes and we see green things in the ditches. What are those things?

A. Well, we have all buried plant that serves this route. And the cable has to be accessible so tha we can hook up services, so we can test services, and in some cases we need electronics to aid the cable plant because the customers are so far away from the central office. Some of the boxes would be closures that allow us access to the buried cable.

The other closures that might be mounted, the boxes would be equipment electronic equipment that regenerates the signal to keep boostering the signal strength. So it's a strong signal when it gets to the

customer. And a third type of box would be the terminal equipment for the carrier where we connect customer up to the carrier system.

Q. So the different facilities we would see above ground are these white boxes. What are those called?

A. Those are usually repeaters, although it's not always white. It might be a light green.

Q. And the purpose again of that facility that those white or pink boxes we see, is to do what?

A. To boost the signal or strengthen the signal.

Q. What happens to the signal as it leaves the central office?

A. As the signal goes down the cable, it tends to get weaker as the farther it goes. And so we design the carrier systems to regenerate or boost the signal strength so that the signal is back in a range that provides adequate voice grade phone service.

Q. So all the way out to like the Kleins's there will be these repeaters that have to boost the signal?

A. Correct.

Q. And from a design perspective, how far apart do these repeaters -- are they supposed to be?

A. It is designed on the amount of signal loss that we have, and it depends on a lot of different

factors, but generally they're in the four- to six-fi
range.

Q. The closures, then, these are the little green things we see sticking out of the ditches?

A. Yes.

Q. They might be different colors?

A. They might not be in the ditches.

Q. Or they might be up on the roads. What's in that?

A. Usually that is the cable itself that has been brought up above ground so we can access it.

Q. Now, when you leave the central office and i goes out to the far areas of the service area, does th size of the cable change?

A. Yes.

Q. And why does it do that?

A. The cable plant has been designed to be the most economical design at the time that it was built. It is sized to provide service based on the density of customers in a given area.

Q. Let's talk about this system generally that serve. I believe is that Exhibit 12 over there? I can't read that far. On the far wall is a map that's hung up, it's Exhibit 12. Did you prepare that?

A. I did.

Q. And what is that a map of?

A. That is a map of the U S West exchange fr[om] Valentine going north into South Dakota.

Q. Those lines that are on the outside, these black lines, are those the exchange lines?

A. Yes.

Q. Mrs. Figert, we just talked to her and there's a word that nobody can read unless you're [up] up here. It's LATA, L-A-T-A, on the top. What does that mean?

A. A LATA is a geographic area in which U S W[est] cannot extend services beyond for long distance calls. In other words, we can provide local long distance inside the LATA. The long distance company needs to take calls across those boundaries.

Q. Mrs. Figert -- did you write where these people are located on here?

A. Yes, I did.

Q. And Mrs. Figert is outside of the LATA, so does she technically fall within the U S West exchange territory?

A. Technically she does not, and it is my understanding that she is outside of the boundary.

Q. The three Klein complaints, they're marked with the three boxes; is that correct?

A. Correct.

Q. I'm going to ask you to describe in laymen's terms basically what serves this area for facilities?

A. Okay. Can I use the map to help illustrate?

Q. Sure.

MR. WELK: And I move for Exhibit 12, please.

MR. HOSECK: No objection.

COMMISSIONER NELSON: It's admitted.

A. First off, let me say the Valentine Exchange is a very large exchange. On the northeast corner we have several customers who are technically not inside of our exchange. I don't know what the history is. I could speculate that they were in an area that could not be served by any other customer at some distant point in the past.

And it may have been some agreement between the company and the Commission that in order for them to get phone service, we would provide it to them.

I don't know exactly what the arrangement was. I don't know why we're serving them. But we do have facilities that go outside of our exchange boundary and I'm indicating that here on the northeast corner of the exchange. We do have facilities that go outside, and we do have customers at the end here and here.

And Mrs. Figert is just a short ways across the boundary, as I understand. And without a legal description of her property, I couldn't tell you for sure, but it's my understanding she is outside the exchange.

Q. The yellow line that appears on Exhibit 14, what does that represent?

A. The yellow line indicates where we have cable plant in the exchange. Now, the point I wanted to make is from this customer here.

Q. And you have to tell the Court Reporter what you're pointing because she can't take that down.

A. That's correct. From the northeast corner, the farthest customer that is outside of the exchange back to Valentine is approximately 42 miles. So we have 42 route miles from our central office switch to this particular customer.

Q. Let's stop for a second. I mean you do work in and out of all the 14 states?

A. I support service quality issues like this in all 14 of the states U S West operates in.

Q. And just to give the Commission, how does that geographic disbursement of like 42 miles, how does that compare to our type of service areas that U S West has?

A. Well, U S West has the largest geographic area in the United States as far as what was once a regional Bell company. But this exchange probably is one of the largest ones that I've seen. And the reason for that is between the northeast corner to the southern area where we serve is probably over a hundred miles.

Q. So have you made a computation of how many square miles that is served?

A. Yes. If I look at the area approximately encompassing the yellow-lined area here, down through here, that would be the northern and eastern most part of our exchange. It covers approximately 250 to 300 square miles.

Q. And what about -- you haven't computed the southern portion of the exchange from Valentine, have you?

A. I have not. I don't know what the total number of square miles is in the entire exchange.

Q. All right. Let's talk a little more about the geography of this area. First of all, how many approximate miles are there of cable that run throughout that exchange, that northern exchange you've just described of 250 square miles?

A. Well, starting at the Valentine central

office and going out on a direct route out to the farthest customer, I said it was 43 miles, 42 or 43 miles. When you add in all of the links for all of side legs and everything in this area -- now, we do have an additional side leg that goes out to Sparks I'm not including any of that cable, just the cable that's shown here on the map -- we have over 104 miles of cable that we have to maintain.

Q. And of that 104 miles, how many repeaters closures do you approximately have on it?

A. Well, I asked the installation manager if would get that information for me. He did a quick check and counted between the central office on a direct route to the Klein area, this corner here, where the Kleins live, to be approximately 108 closures. We would also have to add in all the closures on all the other side routes. And so I would guess we probably have over 200 closures serving the customers in this part of the exchange.

Q. What about the number of repeaters?

A. The repeaters that serve the customers depend on where they're located, but for the Kleins we have six repeaters.

Q. What type of carrier system do you have that serves this area?

A. We have an AT&T analog carrier system known as SLC 8, and that is abbreviated all capital letters S-L-C 8.

Q. And is that the name of a manufacturer again?

A. Yes. Well, it was AT&T. Now AT&T has broken off and has become Lucent. But at the time it was built, it was AT&T.

Q. Let's talk about the cable that serves the area. Describe to the Commission generally how many pair cable do we have coming out of the central office ultimately out to the Kleins?

A. We have various size cables depending on how far from the central office we are. We start off directly out of the CO we have a hundred pair cable that goes in our underground conduit and manhole structure out to the eastern edge of the town and it then is spliced into 75 pair cable. And as we get further from the office it tapers down into 50, 50-pair cables, 25-pair cables, and 6-pair cables.

Q. What about is there any other comments you want to make about the geography of the exchange other than what we've covered?

A. I think it's important to understand that we have obviously a lot of miles of cable that we have to maintain. Throughout this area, once you leave the

eastern edge of the town, all of this is dirt roads, and some of it is very difficult to get over depending on the time of the year and the weather conditions and those kinds of things.

The county apparently does try to maintain the road and they do try to blade it. But we have found over time that the linemen of the road tends to shift one way or the other depending on circumstances such as standing water and that kind of stuff.

So there are places where our cables no longer go right along the county road. Sometimes they're 50, 100 to 150 feet away from the road. Other times the road is shifted and the cable is underneath the road.

So that sometimes creates problems with maintenance either because it's hard to get to the cable because of where it's located, or because of county road work they sometimes scrape our cable and create problems.

Q. When were the facilities installed? Are you able to determine that in reviewing the facilities map?

A. Yes. Most of the cables were originally placed in the 1964 time frame. We have replaced certain sections of the cable, but given the vast amount of cable in this area, we have had to replace

relatively small amounts of it because it has held up fairly well.

Q. Why don't you explain to us from an engineering standpoint the difficulty in maintaining the system that you've described here? When you have a problem on a line, how do you detect whether from an engineering standpoint what the cause of the problem is?

A. Well, first it's important to understand that because this area has grown up over time, we have had to try to expand our capacity on these cables so that we could serve all of the customers out there.

We also have had a problem from the standpoint that customers farther than a certain distance out from our central office physically cannot be served on a copper loop. If we put them on a copper loop with no electronic aids, they simply could not get dial tone.

Q. You better stop there. Let's stop there. What do you mean they have to be served on a copper loop?

A. Well, some customers we serve over 100 percent copper with no electronics, no carrier systems. If they're close enough to the office, that's physically something you can do. But the customers

where the Kleins are located and the out end and, in fact, probably half of this total distance are beyond that limit. So physically we cannot give them an all copper loop. We have to also use carrier of some type to serve them.

Q. Let's get back to the difficulty of maintaining the route because of the distances between the central office and where they're at. Why is that difficult from an engineering standpoint to maintain?

A. Well, it's difficult for two reasons. First we have to maintain the physical cable, and then we also have to maintain the carrier systems that have signals riding on those physical cables. The carrier systems are designed to allow us to hook up as much as eight customers on one carrier system. And you only need one physical pair to support that carrier system.

This is important because, like I said, when you're out this far, you can't provide service over just copper so we have to maintain both of those. So part of the problem is from a carrier perspective, if we have trouble on the carrier and we are trying to isolate where that carrier problem is, we have to check every one of the six repeaters all the way out.

So sometimes you have to test sections between repeaters. That means you have to disconnect

the customer and you have to physically drive from one repeater to the other, test it, come back to that repeater, hook everything back up, go out to the next repeater, test the next section, come back, hook people back up.

So it can be a labor-intensive repair, and it can mean that as a part of the repair process, people will be out of service while you're doing that testing.

Now, that answers your question on the carrier side. The problem with the physical cable is that any time you have a problem on any of these cables, such as we have mice get in our telephone closures and they will chew on the insulation, they will create shorts. Sometimes we have cable pairs that physically break.

And trying to isolate exactly where that is can be very difficult. And sometimes if it's not a clean break, it can introduce problems, but you can't identify where that is until something else happens, such as the cable completely breaks, or you somehow narrow down to a given location.

Q. What happens when there are cable breaks or water gets in there, what does the customer hear on the phone?

A. The cable pairs that are used to support the customer carrier -- when we have water in the cable and we start having deterioration of the individual sheaths on each of those wires, that's oftentimes one of the reasons why noise can be introduced into the circuit that the customer is using.

We can also have noise introduced into the circuit because of the electronic plug-ins that we use at the repeaters and also the electronic plug-ins that we have to use at the terminal serving the customer.

For instance, if you start getting corrosion where the metal contacts are, then the signal starts to break up and you start getting static and noise on those lines.

Q. Let's talk about the repairs to these. When you look through the facilities maps and saw -- what did you see happen back in the fall of '98?

A. The fall of '98 I talked with the technicians and we did ride the route and we talked about some of their experiences with trouble reports out in this area. In this particular area where the Kleins live, we finally found last fall, and I believe it may have been in the September, October time frame, back in this area, I believe, maybe six or eight miles --

Q. Why don't you describe for the Court Reporter

where it's at then?

A. Six or eight miles south of where the Kleins live we found that we had a bad section of cable that was about 150 feet long. We have gone in since then and we have bypassed that bad cable and put in other facilities. And it was the technician's belief that that cleared most, if not all, of the problems that the Kleins and others that live out here have experienced.

Now, understand that part of the problem with cable, maintaining cable, is you may have a single pair in that cable that may start going bad earlier than other cable pairs are going bad. So when you test on it, if it has water in the cable or if it is an intermittent type problem, it's sometimes hard to isolate.

Once you get down to isolating it, it may appear that it is a problem associated only with that single pair. But as you -- so one way of solving that problem is to cut the carrier system off of that pair and onto another pair believing that you fixed the problem.

But if it is a problem that's in the cable that's buried in the ground, you can't see what's going on, you may find out a month later or two or three months later that the pair you cut to is also starting

to develop the same type of problems. Once you st
to see that history happen, then you start suspect
the entire cable may be having a problem.

And that's what happened last fall is my
understanding, is that previously we had cut to ano
pairs in that cable. It may have cleared the probl
for a while. Later other problems started to devel
We finally isolated that it was a more of a problem
than just that single pair, and so we bypassed that
section of cable. And we believed that we cleared
problems that has been plaguing the Kleins and other

Q. Do the company trouble reports reveal any
trouble reports from approximately November of '98 t
today?

A. I'm not aware of anything in our records.
And talking to the technicians, they were not aware
any trouble reports that had come in.

Q. There's no assurance that there's not ever
going to be problems on this line, are there?

A. Absolutely not.

Q. What if you had a brand new system that
completely replaced that, is there any assurances you
wouldn't have similar problems?

A. Absolutely not.

Q. Why is that?

A. Well, if a cable-- the easiest thing to understand is a cable cut -- you know, if there is something that causes a cable to be cut, such as a backhoe or the county blading the road, it doesn't matter whether the cable is brand new or whether it's old, it is going to be cut. And everyone beyond that is going to be out of service until we can get the cable cut repaired.

Likewise, if carriers are -- you know, occasionally carrier plugs will go bad and we have to replace them. We have problems because of lightning, and those kind of problems are not going to go away just because you replace it with something different.

Q. When you reviewed the trouble reports and the repair records, did you see any instances where they reported trouble and U S West did not respond?

A. I did not see that. To the best of my knowledge, I believe they have responded when we have a known outage or trouble problem. The biggest problem we have is that oftentimes customers, as testified earlier, do not report all of the trouble and sometimes it clears by itself. Part of that is inherit in any kind of electronics.

If a bad contact is causing the problem and something gets changed, the problem can clear. There's

a lot of other reasons why it might clear. And if we're not aware of that, then it's hard for us to respond to it. It also makes it harder for subsequent repairs because we don't always know the history of everything that's happened up to there.

Q. And every time a technician is dispatched, it's going to be what, approximately 30 miles out and 30 miles back?

A. Yes, but it depends a lot on where the technician is. Obviously we don't have technicians just sitting around waiting to be dispatched. We size our staffs to handle the volume of work that is needed for this location.

So, theoretically, they would be out on another call potentially. If they are in that area they may be able to get to that trouble report sooner. If they're at the other end of the exchange, a hundred miles away, it's going to take longer.

Q. And how many technicians are in this area that serve the Kleins and Mrs. Figert?

A. We have two full-time technicians that serve the Valentine area. We have one full-time technician that serves Ainsworth, who can also help out in Valentine. And then we have another employee that does functions and supports the technicians so that they can

give their full time to the repairs.

Q. One of the complaints that has been raised here today through a number of people is the response time of having someone come out on a Friday and not coming out until Monday. Why don't you comment on why people just don't come out as soon as they get a telephone call?

A. Our crews are staffed Monday through Friday we will work. And any repair calls that we get prior to 1 o'clock, according to company standards, we will repair by 7 o'clock. Now, in a rural area such as the Valentine Exchange, that is sometimes difficult to do. And I would suspect there may be times when we do not get the repairs done by 7:00 p.m. We would attempt to make those, or we would commit to make these repairs the next day.

We do not have a staff that is staffed up over the weekend, so calls that come in late on a Friday would normally get dispatched on Monday, unless it's an emergency, an unusual situation, and then we would do a call-out, recognizing that that certainly is an additional expense to U S West. And we also get into, you know, union agreements and have to comply with the union contract.

Q. What about the disclosing of the numbers of

the private home numbers of technicians, what's the company policy on that?

A. We don't do that.

Q. And why?

A. People have a right to their privacy. And we have found that when customers know the technicians home phone numbers, they're subject to getting calls at any time of day and night, including the middle of the night when they're asleep. And we feel that's an intrusion on their personal privacy and their families privacy, and so we would not do that.

Q. Has there been any record of anybody from this area calling technicians at home or in the evening?

A. In talking to the technicians, they have reported cases to me where technicians in this area have gotten calls at 2 o'clock in the morning with demands that they come out immediately and fix the phone.

Q. Let's talk about what you're doing, you had the fix, and you placed this cable placement, all right, back in the fall. And basically since -- I mean there's been a couple sporadic, but certainly the problem has been resolved; is that correct? There might be some sporadic --

A. Well, I want to be careful in answering that. From our technician's standpoint, looking at trouble reports that have actually been called in, that they are aware of what's gone on, they have had very little trouble reports in this area since the first of October or November. And it is their impression that when they replaced that cable, that much of the problem was resolved. And certainly we've had some testimony today that would indicate that service seems to have gotten better over the last several months.

But at the same time we are committed to working with our customers in identifying problems. And to the degree that we are aware of problems that maybe previously we weren't aware of, we certainly want to continue to work on those. So, to the best of my knowledge, we think we have fixed those problems.

Q. But you're not -- you are being proactive in more testing?

A. Yes. We're going to go out periodically. I think it's prudent for a company to go out and do a thorough analysis of the route. We have a lot of carrier systems out here. We have a lot of customers from Valentine that work out in this part of the exchange.

And I have already got the commitment from

our construction supervisor that he will provide trained technicians who will go out and systematically analyze the cable.

And what that will entail is starting at the CO and working their way out to the end of each one of these side legs and determining whether or not we have any cable plant that is not meeting standards, which may be because the cable is wet or some other problem. And if we determine that cable or closures need to be replaced or rebuilt, we will do that.

Q. And you're not going to do that without any Commission order; you're going to just go ahead and do it?

A. Yeah. We have already started that process to do that.

Q. The testing. Now, that means you're going to have to go closure to closure to do these tests?

A. Yes, usually.

Q. So that means that entire 30-some-plus miles almost to the end 40-plus miles you're going to have to do cable section by cable section, closure by closure?

A. Well, it's actually over a 104 miles of cable plant that we will have to go through and test.

Q. Is that testing, has it commenced yet?

A. No. We are planning on starting that next

week.

Q. So if it starts next week, how long will it be for the entire testing to be concluded?

A. Well, it depends a lot on what the weather i and what kind of weather-related problems we run into. And obviously if there's other emergencies, we would have to make the technicians available to repair cut cables and that kind of stuff. But our hope is that w could do the analysis within a 60-day period.

Q. Let's talk about some engineering principles and let's just talk if you were to replace the entire cable and carrier system for these people, and just sa that somehow God gave us the money to do this, how muc would it cost, Mr. Peters, to go out there and replace this entire system?

A. Well, the cost to do that would take a lot o work to come up with a detailed engineering design, so I've had to rely on some assumptions and some average costs. Fortunately here, we have what appears to me - and you folks live in the area would know more. But i appears to me that the soil conditions are fairly favorable for buried cable. In other words, it doesn' look to me like there's a lot of solid rock in the ground that we would have to incur extremely high expenses to bury.

But given the fact that we have this much plant out there, just to replace the cable, I would estimate that just the cable replacement, with no carrier work at all, would be in the neighborhood of 4.4 million dollars.

Q. And what if you replaced the carrier system?

A. If we replaced the carrier system with similar equipment, same technical design parameters but of a newer vintage, the carrier equipment by itself would be approximately 1.2 million.

Q. What about the switches in the office?

A. The switches, hopefully, would not be affected and would not need to be replaced. One of the concerns that I have, and I was not aware of the extent of the problem before today.

But if there's a lot of 411 calls that are being billed to a lot of different customers, one of the things I do want our switching engineering and planning people to look into is whether or not there is a switch problem that may be causing stray signals coming into the switch to be interpreted as bona fide calls that would be generating these kind of calls.

Q. I want to ask you -- you heard a lot of testimony about that problem. And I know without testing all that, you can't give a final answer. But

what are possibilities of how that could have occurre

A. The possibilities is partly the switch, coul be something wrong in the switch. Or the problem we have is if there are -- because the carrier works on different signal frequencies, and Touchtone phones als work on a tone or frequency.

Stray current on the lines could be interpreted by the switch as dialed numbers. Obviously, a three-digit number like 411 would be easier for the switch to inadvertently pick up as a dialed call as opposed to a several digit local call, or 11 digit long distance call.

Q. What is stray current?

A. Sometimes you have power-induced current on the telephone network. The power lines that might be riding overhead or in the area could induce a current onto the line. I don't know if that's a problem here. That's something we'll need to investigate.

You can have stray current caused from lightning hitting one point in the network and traveling down the cables and being superimposed over the frequencies of the carrier system so the switch interprets that as a dial call when it's really just an inadvertent signal.

Q. In your opinion as an engineer, would

engineering principles dictate, based on what you know now, the replacement of the system?

A. I don't believe so.

Q. Why not?

A. Well, external impact such as cable cuts, mice getting into closures and chewing on insulation, lightning-induced type problems, all of these types of things are not indicative of the age or vintage of the cable or carrier system. That's going to create the same type of problems if you have brand new facilities out there.

The real problem is the -- you know we have to contend with the great distances between the customers and the switch. And the longer the distance, the more chance that something can happen to that plant.

Q. How long did you say it would be until the tests are completed?

A. We would hope to be able to complete that in 60 days.

Q. Would you -- does U S West have any objection sharing those results with the Commission?

A. No, we don't. Let me explain what will be done in 60 days. 60 days would allow us to analyze the cable plant and identify whether or not there's

problems. We would expect to go ahead and fix the problems to the extent that they can be fixed prior the analysis being completed. We would do that. Sc of the repairs would have to be fixed after the analysis is completed.

Once the cable plant has been tested and we know that it's in good shape, we would go back and do additional testing on the carrier systems themselves and see if we can identify any design abnormalities o the carrier, or whether there's any defective parts o the carrier that would need to be replaced. So there are additional work that would have to be done after t days.

Q. What are CLASS services?

A. CLASS services are switch based services. Switched, to a large extent, is a large computer, so it's software services that's generated within the switch, such as call forwarding, three-way calling, those types of services.

Q. The people that are served by these systems, do they have available some of the CLASS systems but not all of them?

A. That's correct.

Q. What type of CLASS services do they have available and what CLASS services do they not?

A. Services that are generated out of the switch should generally be available. That would be call forwarding, where the switch identifies that the call coming in to a certain number should be routed to a third number. Other features such as Caller ID is not a service that is compatible with the electronics that we have working to provide service so that is generally not available.

Q. What about the Internet service?

A. The other day when I was driving around with the technicians and they told me that the Klein School had added another line for Internet service, I was shocked. Because in my opinion Internet shouldn't work at all out in this area. It is so far from the central office. And with the analog carrier out there, Internet access is something that U S West does not guarantee. And I was surprised that it works out there. Apparently it is working, but we don't guarantee that type of service on this network.

Q. What service does U S West guarantee on this network?

A. Voice grade service.

Q. Does that service, the voice grade service, in your opinion, satisfy and of good quality service today?

A. I can't speak for every customer out there. I know that we have many customers out there that have never filed a complaint and so apparently it is for them. Obviously, there's some customers we need to do additional work out there to make sure that their service falls within the acceptable range.

MR. WELK: That's all I have.

A. I would like to say I think the capability, the system that we have there, certainly supports quality voice grade service. But, again, given the distances and the amount of cable plant and carrier plant that is used to provide services that far from the office, it's an ongoing effort to make sure that i always stays inside the acceptable range.

MR. WELK: That's all the questions I have.

COMMISSIONER NELSON: Okay. We'll take a five-minute break.

(AT THIS TIME A SHORT RECESS WAS TAKEN.)

COMMISSIONER NELSON: We'll go back on the record. Do any of the other parties have questions of the witness?

MR. WELK: I need to revise. Based on his conversation with Mrs. Pigert, he's got to revise wher she's at on the map.

COMMISSIONER NELSON: All right. Mr. Welk.

MR. WELK: Thank you, Madam Chair. As a result of a conversation that Mr. Peters had with Mrs. Figert, he would like an opportunity to amend his testimony on where he believes she resides.

FURTHER DIRECT EXAMINATION

BY MR. WELK:

Q. So, Mr. Peters, did you have a conversation during the break with Mrs. Figert?

A. I did. We both looked at the map which shows section numbers, which are one mile squares, and she indicated that she was just south of the section line where our boundary is, rather than north of it, which means that based on her understanding of her property description, she would be just barely inside of the telephone exchange rather than just barely outside of it.

Q. All right. And I did have marked as Exhibit 19 -- Exhibit 19, do you have that before you?

A. I do, yes.

Q. That exhibit consists of a letter dated January 29th to me from to Mr. Hoseck and Mr. Klein, along with a letter dated January 13th, 1999, from Mr. Klein to me, and along with a staff data request. And also there is some answers that respond to the questions that Mr. Hoseck and to Mr. Klein. Did you

prepare those responses?

A. Yes, I did.

MR. WELK: I would move for the admission of Exhibit 19.

MR. HOSECK: May I question the witness further with regard to that?

Are you swearing to the truthfulness of those responses?

A. To the best of my understanding, I believe they are true.

MR. HOSECK: No objection.

COMMISSIONER NELSON: Okay.

MR. WELK: I have nothing further.

COMMISSIONER NELSON: Exhibit 19 will be admitted.

MR. WELK: Thank you, Madam Chair.

COMMISSIONER NELSON: Okay. Do any of the other parties, the complainants, have any questions for Mr. Peters?

MR. MILTON KLEIN: Yes, I do.

CROSS-EXAMINATION

BY MR. MILTON KLEIN:

Q. In this Exhibit No. 19 and through your verbal testimony, you use the words a number of times labor once at least, labor intensive and difficult in

regard with this repair process. Yet in this Exhibit 19 you state that current staffing is appropriate to the amount of the work in the Valentine area.

And I'm a bit confused. If this is so difficult and labor intensive to get this done in a timely fashion, how does that reconcile with having an appropriate level of current staff?

A. Well, labor intensive, the way I used it intended -- it means that going out and identifying the source of the problem isn't something that can be done in a few minutes or sometimes even an hour. But that doesn't mean that when you look at the total amount of work that has to be done in the Valentine telephone exchange, that we don't have enough people to do it.

So even though the technician may spend a better part of a day working on this problem, we have another technician who could be repairing other troubles. And, obviously, we don't have a person spending half a day on each problem every day. So overall, looking at the total amount of work to be done and the total number of people we have, we believe we're staffed appropriately.

Q. You stated that you finally found, you thought, last fall a cable problem and replaced approximately 150 feet of cable. Do you have an exact

date on when you did that?

A. I don't have that. When I talked to the technician, I didn't ask them for exact date. In fact, the technician that did it at that time didn't remember. He would have had to gone back through his records. I didn't ask him to do that.

Q. Do you have an idea that was before or after October 6th when they found a short at the Bryan residence?

A. I don't know whether it was before or after that. I think it was in that general time frame though.

Q. Would it be reasonable when we have some -- a large series of outages reported, if somebody has a trouble report and the technicians have a difficult time pinpointing that problem and they're uncertain about whether they have it fixed or not, would it be reasonable for them to check back with customers and other customers in the area given this remote area and see whether, in fact, that problem has been fixed and their service continues to be quality?

A. Well, first off, as a technical witness, that's more of a business question and I'm not sure I'm the best person to answer that. It is my understanding that the technicians and the manager of the technicians

have tried to be responsive. I believe the manager [illegible] come out to some of the locations where there's been continuous problems.

And certainly in my talking to the technicians, they have a desire to make sure the problems are fixed. But I don't know whether it is reasonable for them to call every single customer every single day to find out whether the problems that were fixed the day before or the week before or the month before continues to cause no trouble or not.

Q. How often do you do these type, the system tests that you were describing that you intend to do?

A. Are you asking about the work that we plan to do on a proactive basis going forward.

Q. Yes?

A. Generally that's something that is done on a case-by-case basis. At the time that we engineer and install the equipment it is tested out to make sure that the repeaters are in the proper location and everything is working properly.

Over time you add additional customers to the carrier systems that were initially established and you add additional carrier systems, and at the time that we do those installations the signal strength should be tested to make sure it falls within parameters.

Obviously as time goes on and as, you know, everything is affected, there is a potential to have some variation from the original design and the original tests, but that's usually -- a thorough analysis is usually done as the conditions and trouble reports warrant doing it. So I can't really say what' average.

Q. Would you say that -- you spoke about the difficulty of finding some of these problems. Would you say that it would be more readily -- that they'd b easier to find and more quickly to find if the technicians could respond in a lesser time frame more quickly?

A. Are you asking whether repairs would be completed faster if a technician was dedicated to your area.

Q. No. I'm asking if a problem develops and there's problems detecting the problems. I'm asking about the detection of the problems. Would it not be more efficient if the time period from the time it was reported until the technician is notified was a lesser time and would then able to find it more quickly?

A. I don't know how to answer that because if the technician was say in the southern part of the exchange, even if they were -- they received the report

within five minutes of when you called it in, they still may not be able to get to it until, you know, three or four or five, six hours later. It depends on what else they're doing and where they're located.

Q. Yes. But if he was able to get there in a shorter period of time, would it improve his chances of finding the problem?

A. No. I think it might get fixed faster because he started faster. I don't think the overall length of time it takes to do the repair is going to be any shorter.

Q. I'm not talking about doing the repair. I'm asking about the time it takes to detect it.

A. That's what I'm saying. Once the problem is detected, he fixes the problem.

Q. Correct.

A. If it takes six hours to direct a problem or if it takes two hours or if it takes a half hour, that detection period is going to be the same regardless of when he got notified of the problem. Now, the repair might be completed faster because he started on the problem faster, but the detection period itself will be the same time.

Q. But are all these problems detectable when they come out there?

A. No.

Q. And why not?

A. Because of, like I said, if you have -- the are certain types of problems that are easy to detect Obviously if a cable gets cut and everybody is totall out of service, you can deduce that somewhere between there back is a cable cut and you know who is in service and who is not in service and you know it's i that general area and you start going out and looking

Obviously, if there's a backhoe sitting out in a field and they've got a big hole dug because they're putting whatever in, fences, whatever, then yo would say, a-hah, maybe that's where the cable is cut. So that kind of a problem is easy to find.

When you have a mouse that gets into a telephone closure and they start nibbling on the insulation and when that wire blows in the wind and touches the metallic ground bar and it grounds the circuit, it causes trouble, and then when that line moves away from that metal piece the trouble clears.

That's extremely difficult trouble to find. And it takes a lot of -- you can even open the close you are up and not detect something like that because there's a lot of wires in some of these closures. So that is correct be a very difficult kind of a trouble

to find.

Q. But yet you still state we have enough current staff.

A. I guess I don't understand the question.

Q. I'll ask another question. Get off that one then.

A. If you look in the closure and can't detect visually a problem, because it's a problem that is -- I mean a small piece of insulation is worn, it doesn't matter how many technicians you have out there looking at every single closure if you can't see that problem. It's hard to find.

MRS. FIGERT: Can it be detected electronically?

A. That's what we attempt to do. We attempt to isolate.

MRS. FIGERT: Can you mouse-proof your equipment?

A. No.

MRS. FIGERT: Why not?

A. Because.

MRS. FIGERT: I'm serious. Why can't you mouse-proof your equipment?

A. I can give you a technical training class, but basically a mouse can get into a very small area

We do try to protect it as much as we can, but there no way of keeping insects and rodents and that kind o stuff totally out of the plant.

MRS. FIGERT: Insects, I could understand, but maybe there is some technology you could purchase covers, seamless, I don't know.

A. If you have a suggestion of a particular technology, we'll be happy to consider it.

MRS. FIGERT: I'll get on the Internet as soon as a leave this place.

A. I mean, this is an industry. I mean our design is not unique to Valentine, South Dakota. I mean these are off-the-shelf products that we buy. I mean all telephone industry providers buy these kind o products. This is what's available to the industry.

MRS. FIGERT: Well, there's a million dollars to be made by somebody to invent something new then. Go for it.

Q. (By Mr. Milton Klein) You stated something about wire in the wind. What wires do we have that are capable of flopping in the wind?

A. Even wires that's inside telephone closures can be subject to some movement.

MR. MILTON KLEIN: That's all I have.

MRS. SHERYL KLEIN: Well, yeah.

CROSS-EXAMINATION

BY MRS. SHERYL KLEIN:

Q. You have stated that some places of the cal are experiencing deterioration, the cable sheathe, a you stated some of the contacts, corrosion of the contacts, although you're uncertain how extensive thi is, given this line is 36 -- it's 36 years old approximately. Is this pretty typical of a 36-year o line to be deteriorated and corroded?

A. Well, let's be clear on my testimony. I sa that given the 104 sheathe miles of cable, we've had very few sections that we've had to replace, which indicates to me that overall the cable has held up ve well.

Obviously, as one of the witnesses said earlier, if you have a tractor or farm equipment or a mechanical equipment, over time it's not going to be as, you know, like new condition but that doesn't mean it's not good and it's not usable.

There are going to be times when water gets in to the cable because cables have been cut. The conductors may not be cut, but the outside sheathe may be cut or closures -- somebody hits a closure or some act of nature or man-made trouble leaves a closure exposed, water gets into -- it gets into the cable and

the cable starts to break down.

We have replaced those sections. We will to identify additional sections of cable that maybe need to be replaced because it's not meeting transmission standards, but that's not to imply that that's a widespread problem.

As far as the contacts go, when you have e boxes with electronic equipment, circuit packets, wh are like printed circuit boards that you have to put into that box and it has to make contact with the wiring on the back, just by virtue of the fact that there's moisture in the air and it condenses on those pieces of equipment, over time you can get tarnish on that metal and it may not be making as sharp a contac as you would like it to.

Sometimes problems are cleared simply by pulling the plug out, sanding down the contact a litt bit, putting it back in and the plug itself works perfectly. It's just had that contact. That is going to be true whether it's brand new or whether it's old, over -- you know, if you got moisture in the air, it's subject to be tarnished. Metal does that.

Q. So is it pretty safe to say in your engineering experience you have more trouble with say 30-year-old line versus a brand new line?

A. I think if you're talking relatively speaking that anything that's brand new is usually going to be better than something that is similar but older.

Q. Okay. It would be less vulnerable to mice and water damage and --

A. No, no, I don't agree with that. I mean if brand new cable is -- you have to take the sheathe off the cable and the individual wires are exposed. They each have insulation around each individual wire. Those are available in some closures that we call distribution closures where we hook up customers.

Those kinds of wires are going to be exposed to mice and insects and weather and everything else if they're new or if they're old. That's not -- I mean the age is not an issue. It's the fact that anything that's been opened up is not as good as cable that the sheathe has not been ever opened up.

Q. Okay. You acknowledged -- you've stated that this is a difficult area to provide service for any number of reasons that you shared. Does that mean we should tolerate and accept the lower level of service from U S West?

A. My opinion is that you're entitled to quality voice grade service, and U S West has a desire and we would like to be able to provide that. We need to

figure out how we can do that. Part of it is, I think, better communications.

There certainly has been a lot of testimony that in times not everything that happens on each individual line is reported. That gives us less history to work from to help isolate what's causing that trouble. And sometimes it's a multitude of different problems.

And I think we need to at all times understand -- this is a little side note because I do want to get this on the record -- that not all problems that every customer in this area has experienced is necessarily due to U S West or our outside plant.

For instance, there's been testimony of disconnects of long distance calls. Well, when you understand that that call goes through a multitude of switches over a lot of different facilities, anywhere on that connected path could be the cause of that particular call being dropped. So it doesn't necessarily mean it's our error.

There are times when people have experienced outages that may be because someone else has called in a trouble report. We're in the process of trying to isolate the trouble and to do that we had to take the system down so that we could repair it.

And, you know, the technicians indicated me that sometimes it's really hard to repair these because people are not always home. They're out to to repair the problems and people are not home, so also can't call those people and let them know they service is going to be out. They get home, they pi up the phone, it appears it's another outage. It's an outage caused by trouble; it's an outage caused b doing the repair.

Q. Okay. Given that we're almost on the verg of the next century, do you believe it's reasonable children who reside in our area to be not allowed access to the Internet?

A. I think given the perfect world -- and I think everyone ought to have access to the most moder telecommunication services. But in a perfect world, cost would not be an issue and there would not be physical limitations. That is something that we have to deal with.

We have an obligation to provide voice grade services, to provide other type of services. Like testified earlier, the guy from the school, he wanted 56 kilobyte to the Klein School. That would not be something we could technically do without completely rebuilding the system.

And rebuilding the system and spending, you know, 5 or 10 million dollars, and it likely would be more than that because it's so far out. We would probably have to put fiber out there, and we would have to put digital carrier, so it may be in many tens of millions of dollars in today's real world. That's not something that U S West is capable of doing.

MRS. FIGERT: Capable of?

A. We have to get the money from our shareholders. If there is not a return on investment, we are not capable of doing it.

COMMISSIONER NELSON: Are there other questions from the complainants?

CROSS-EXAMINATION

BY MRS. JOANN KLEIN:

Q. Do I understand you're saying today, as U S West people, that because my neighbor up the road has got telephone problems, I should not -- I should also -- and I have too. That we both should call U S West? Is that helpful?

A. Actually, it is helpful.

Q. It is? Okay. I thought it was annoyance. Like REA goes off; we figure, oh, you called over there, all right. They're going to be added and you don't bother them, you know.

A. Yeah, it's helpful because you may or may not be on the same carrier system; and, obviously, you wouldn't know. You know, only we would know. So if you call in and you got trouble and your neighbor has trouble and they don't call in, we may think it's only on one system, and so we may not be aware of the problem on their system and it may not get automatically fixed. We hope it would be picked up but it helps us to be sure we pick up those problems.

Q. It's easier for you to focus on where the problem is then. All right. I'll pass the word.

CROSS-EXAMINATION

BY MR. RANDY KLEIN:

Q. What is the normal life expectancy of a system such as we've been talking?

A. I don't know that we can answer that. It's like most mechanical things. If it's still working, it's still working regardless of the age. So I don't know that you can't say that when something gets to a certain age it stops functioning and you have to throw it away.

Q. These cable depths that we have, you say the maintainers hit the cables and I know one guy has disced his several times. Why aren't they buried at a level you aren't going to hit those? Are the

maintainers --

A. They probably were when they were buried.

Q. Do you think they dropped 18 inches?

A. We bury 24 inches.

Q. You think these roads have settled that much in that length of time?

A. I don't think so. We have had areas where we know for a fact the road elevation has dropped 20 inches.

MR. LAWRENCE KLEIN: I think erosion sometimes has dropped that level that far, hasn't it, practically and sand hills and stuff like that?

A. Yeah, yeah. You have a lot of things that affect it. But, yeah, we have had areas where we know the cable is buried at 24 inches and it's being scraped by the blades.

Q. (By Mr. Randy Klein) Now, you're with the engineering department; is that correct?

A. Yes.

Q. Okay. So if I wanted to buy an Internet hookup, somebody would have to ask you if it was feasible to put it in at my location; right? I mean you would think they would check with you to see if the system would handle it?

A. Theoretically, on our records it would

indicate how far away you are, what we call which resistance zone you're in, which gives us the [illegible] of distance, and they should be able to tell about [illegible] time. I would like to think that all the people in [illegible] business office are doing a thorough job of checking the record for your service.

And I probably would have to be -- if I was going to be totally candid, I would have to say that I don't think that always happens. I think there are times when orders get taken and then until it gets out to the technicians to work it, and they know the physical geography, they know the customers, they know where people are located, they oftentimes recognize at that time that that service cannot be provided to that location.

Q. Okay. You said you were out by the school and you heard they had Internet and you were surprised it worked at all. Why on earth would you sell something to a school district and lead them to believe it was going to work if they were going to have problems with it?

A. We didn't. They bought a regular phone line. We don't know what they're going to do with the phone line. They did not buy a designed service line. They bought a regular voice grade line. They decide to

plug it into the computer. We didn't know that they were going to do.

Q. So if they would have asked you that, you would have advised them against that?

A. I would like to think that we would be able to do that.

Q. You're not sure?

A. Like I said, if they called the business office, I don't know that the people in the business office have an engineering technical sense. And if they didn't pick it up on the record, they may not be aware of how far that customer was.

Q. And I would think -- now, maybe it's just me, but if I was running a school, I mean, a school called in and they wanted an extra line, with the way technology is going nowadays maybe shouldn't I have asked were you going to use this for an Internet system? If you are, maybe you should think twice. Wouldn't you think they would be versed enough in that to know that how many schools need three or four lines for a little rural school out here?

A. Our centers that take all of the calls are not even located in this state.

Q. A lot of our problem -- I think that's a lot of what you're hearing for complaint. We don't get to

talk to a person, just a person. We have these operators. You talk about reporting outages, you know, okay, all right. Punch one to -- punch one, then somebody comes, to punch this, punch that. By the time you get done, it takes five minutes to call in to report an outage.

And a lot of times I've headed out the door, I'll grab a phone going to -- okay. I'll call up to mom's, you know. You can't just get an operator and say, "Okay, my phone is not working. Can you report that?" You've got to go through this. You wait for that, you know, the lines are busy. Where did our real people go?

MRS. JOANN KLEIN: Why is your address Valentine, Nebraska, and you have a South Dakota Zip Code?

COMMISSIONER NELSON: Let's confine ourselves to the questions.

A. Obviously that's not a technical question. That's a business decision that's been made by the company. And I am not a part of that business decision, so I don't know that I could add anything that would be constructive.

MR. RANDY KLEIN: Being you're the representative for U S West, we don't have anybody else

we can ask, so I guess you're the lucky man.

COMMISSIONER NELSON: Do you have other questions?

Q. (By Mr. Randy Klein) Yeah. He said something about -- Milton asked him about detecting. It's going to take the same amount of time to detect a problem. But if something is broke, is it easier to find what's wrong with it than when it's working again? Do you understand what I'm saying? When the phone is actually down and out, is it not easier to find the problem than when the phone is operating?

A. I would agree it's easier when it's broke.

Q. I think that's what he's trying to say. I could be misinterpreting but that's the way I understood it. If they could get out there when the phone is actually down maybe than after it's dried out or the wind has quit blowing or something. I know there's times when probably they could if they could get notified faster.

A. Can I ask you a question before I answer that?

Q. Yes.

A. Do you operate a farm?

Q. Right.

A. Ranch, cattle?

COMMISSIONER NELSON: You're not supposed to be asking him questions. He's asking the questions.

A. Okay. What I would believe my answer would have been, that as much as it may be nice to hire people that you can have work part of the day and pay them a full-time wage, which is what we would have to do to respond at the level of service that you would like us to respond to, I think you would agree as a businessman that you would not want to hire four people to help put fences up and have three of them standing around the whole day and pay.

Q. I'm not talking the first instance. You've got a problem that's repeating itself. You know, it's been the third or fourth time you've called in and still having the same problem. I'm not talking about the initial contact, given the benefit of the doubt they might get it fixed. But if the third or fourth time you're still having problems, I think it would move up on my priority list.

COMMISSIONER NELSON: Is that a question?

MR. RANDY KLEIN: I think it is.

COMMISSIONER NELSON: What is the question?

Q. Would it not move up on your priority list?

A. Obviously, if we have technicians that are working on other trouble reports and they get a new

trouble report on a recurring problem, I would say from a business standpoint, it's still hard to tell the customer whose problem you're currently working on, I've got to stop what I'm doing and drive up to this part of the exchange because I need to look at the problem right this minute.

I mean I wouldn't want to have to be the one to explain to the customer that we're going to stop working on your problem so we can go work on someone else's problem. I think from a business standpoint, it's reasonable that the technician would finish the work that they were doing before they move to a next case of trouble.

COMMISSIONER NELSON: Did you have other questions?

MR. RANDY KLEIN: No.

COMMISSIONER NELSON: Does anyone else -- any of the parties have other questions? Okay. Staff.

MR. HOSECK: Yes.

CROSS-EXAMINATION

BY MR. HOSECK:

Q. Good afternoon, Mr. Peters. Would you look at Exhibit 19, please, and, more particularly, the answers to the Klein data request?

A. Okay.

Q. And I'm looking at something called page one of three and it's the answer to question number one.

A. Okay.

Q. It says, and I quote, "U S West believes that the SLC 8 provides quality voice grade service when engineered, installed, and maintained properly." Was this engineered properly? Was this system engineered properly?

A. Obviously I wasn't a part of the engineering when it was originally done, but all indications are that it was engineered properly.

Q. Okay. Was it installed properly?

A. As far as I know it was.

Q. Has it been maintained properly?

A. I think it has been maintained properly, given the fact that there are -- I mean in that large a geographic area, there's always going to be things that you continue to do. But I believe our technicians are maintaining it properly.

Q. Well, if it's been engineered, installed, and maintained properly, why don't these people have service?

A. For the same reason that periodically your car doesn't work. I mean mechanical things break down and it has to be repaired.

Q. Well, you go on to talk about the great distances and you just mentioned this. Was the syste underdesigned?

A. What do you mean by underdesigned?

Q. Was it designed in such a manner that it wa not capable of servicing these people?

A. No, I don't think it was underdesigned.

Q. Okay. What's the normal life of this cable

A. That question was answered earlier, and I don't know.

Q. You have how many years in the phone business?

A. Cable, as long as it continues to work, is still within its normal life.

Q. But there have to be norms within the industry as to what the expected life expectancy of this cable is.

A. I think there are normal life expectancy fro a financial standpoint on calculating depreciation. I don't think that there are norms as far as how long a physical cable will last. It's subject to the individual conditions in which it operates in.

Q. Let's approach it from that perspective. What is the depreciation life on this cable?

A. I don't know. I'm a technical person, not a

financial person.

Q. Well, is it normal that this cable would last 36 years?

A. Yeah. We have a lot of cable that's 36 years old that's still working and working fine.

Q. And you have no problems with it?

A. I don't personally have a problem with it.

Q. No, I mean you haven't had any problems as a company with 36-year-old cable?

A. Well, again, we replace cable based on the deficiencies in the cable. There are cables that we have replaced that's much less than 36 years old, but there's cables that's older than 36 years old, if it still continues to operate, we will continue to maintain it and use it.

Q. Okay. In your review of these complaints, is it true that the Kleins and Ms. Figert have had to pay the same monthly bill as the other U S West customers?

A. Again, I'm not a business office expert. I assume that they pay the same rates, but I haven't checked.

Q. With regard to the staffing needs, how are those determined?

A. The amount of work that needs to be done is analyzed. I think part of it is over time you

determine the amount of work that has to be done. If you have a certain number of people working and they're not able to complete the work in a normal day, you start looking at having to add people.

Q. Who makes that determination for the Valentine Exchange?

A. The manager that supervises the installation and maintenance crew here, whose name is Myron Wasson.

Q. He determines the size of his work crew, in other words?

A. I would think he would do that in concert with his boss, who is the director for a much larger area.

Q. Do you know if he's ever requested any additional crew to service this area?

A. Yes, he has.

Q. And what was -- how recent was that?

A. Last, I believe, a year to a year and a half ago we added another person to take some of the work load away from the technicians. This person does cable locates and other types of non-repair work that frees up the technicians to do more repair work.

Q. Would you agree with me that it's important to people such as the Kleins or Miss Figert that they have the ability to call a fire department?

A. I think that's important to everyone.

Q. And that they have the ability to call law enforcement if they need it?

A. The same answer.

Q. And if they have health problems, that they have the ability to call their doctor or an ambulance if it's severe enough?

A. Certainly.

Q. If this problem -- and you've been present in the courtroom, have you not, during the entirety of this hearing this afternoon?

A. Yes.

Q. And, as I recall the testimony, this problem arose at least since January of 1998. Given that fact, why has it taken until now for U S West to have this "proactive" testing to be done?

A. First I want to correct one of your assumptions. Mrs. Figert has indicated that she has not had significant problems in 1998. And we have a lot of customers out here. Only a small percent have been represented today. And for a large majority of them, my belief is that they have not had problems out there.

Now, the Kleins and the others who have had problems out there, first off, let's not assume that

the problems that they've had has been the same problem. You can fix one problem and fix it perfectly well, but a different problem can crop up. And so thi may not be to your question of why has it taken so lon to fix the problem, I wouldn't agree it's taken that long to fix a problem. There may be a series of problems here.

Q. Well, excuse me, but maybe I misstated the question. If I'm understanding what you're going to do, you're going to go out and do a bunch of diagnostic testing now, significant diagnostic testing. Proactive, I think, was the word you use.

A. Yes.

Q. The question I have is why did you wait until now to do this significant diagnostic testing? Why was this not started over a year ago?

A. Because previously looking at the trouble reports that were available to the company, which is a portion of the total trouble that the Kleins and others have experienced, we can only make decisions based on what we're aware of.

At those earlier times we thought we had the problem fixed. And, in fact, this last fall when we replaced the cable, I think we could make a case sitting right now we think that the problem really is

fixed.

But given the number of customers out there and the number of carrier systems, we want to ensure that it has been fixed, so we're going to go to a greater extent to examine the total route.

Q. Who makes this decision to do this proactive testing?

A. I made that decision as part of my analysis of this route, the trouble complaints, and what this route looks like.

Q. So within the command structure of U S West, you have the authority to request this be done?

A. That is not authority. That is a normal part of my job. It is not something that the company necessarily recognizes that I'm the one that makes the decision. But I have personally gone to the local managers and requested that they do this, and they have agreed to cooperate and provide that analysis because I've requested it of them.

Q. Well, did you monitor this situation at all since the first of last year?

A. No, I wasn't involved until just recently.

Q. You were brought in as a part of a troubleshooting team? Would that be a fair statement?

A. I would say it would be more fair to say that

because of my background and my current job responsibilities I was brought in as a witness to help explain to the Commission what the route looks like, what the nature of the plant is, what its limitations are, and to help identify what can best be done out here to correct the problem.

Q. So, in other words, you became involved once these complaints were filed, and then at that point in time the decision was made to do this proactive testing. Is that a correct characterization?

A. I was not aware of any of the trouble that was out here prior to the complaints, that's true.

Q. So who is ultimately responsible for bringing this to someone's attention within the organization such as you? In other words, why weren't you involved prior to the time that these people having to go to the trouble of filing complaints?

A. The local I&M manager and --

Q. What's I&M mean?

A. I'm sorry, installation and maintenance manager. And the local construction manager will ultimately have responsibility for maintaining the services in this area.

Because of the remote nature of this part of the state, meaning both Nebraska and South Dakota,

where our telephone exchange is, those managers do not come out of Norfolk and they have come here. They do come here.

I know that the installation and maintenance manager has been involved in some of these repairs. I don't know why something more aggressive wasn't done previously, but I suspect it was because we weren't aware of the extent of the problem.

Q. Well, based on your experience with U S West, did somebody drop the ball here?

A. I don't think that's true.

Q. This is normal behavior?

A. Back up. Give me a chance to answer.

MR. WELK: Objection to the form of the question. It's argumentative. He answered the question. It's an argumentative question the counsel has asked.

MR. HOSECK: It is not. I asked him if it's normal behavior. I don't think it's argumentative.

MR. WELK: I made my objection.

COMMISSIONER NELSON: Let me finish answering the first question before I get to the -- so noted. We'll take it under advisement.

A. Understand that we can only operate on the information that we're aware of. It has been testified

today that not all trouble that has been experienced has been called in.

And, in fact, when I looked through the trouble report for the complainants, it indicated to me that the troubles had been extensive at some points in time but was not necessarily continuing. And, in fact, we have not had trouble reports that our records reflect for the last several months, and we think that we have made significant improvement on the service out there.

Now, understanding the complexity of the bytes helps to understand why it is sometimes hard to really understand what's going on out there. Some of the records, for instance, may not reflect everything that's going on out there because trouble reports aren't filed.

One customer calls in and they know there's other trouble reports out there, but those are not called in. And in some cases we have changed the facilities that are used to serve the customer. And when those facilities change, it may be hard to relate one trouble history on one facility to the new facility that's being used.

So the connection is not always understood. I believe that it is the intent and desire of the local

people to provide good quality service out there. I believe the testimony today has reflected by every witness that the people that have responded have been cooperative, they have tried, they feel that the people are doing a good job of responding to the immediate need.

But the nature, from a technical standpoint of the particular problems out there, are not always easy to find. You can have a problem in one piece of equipment that can introduce problems on other lines, and that may not be -- you may not be aware of that.

We had one case where we had a bad carrier channel plug that served a customer and that customer had wonderful service, but the nature of the trouble that channel plug was introducing trouble on seven other workers, and all seven were complaining.

And we were trying to fix that set of problems, and until we realized that the service that was not complaining was the one that was introducing the problem on the other seven, it wasn't fixed. Once we understood what was happening out there, we replaced the bad channel plug and cleared the trouble for the other seven.

Q. Question: Why are none of the local people here testifying?

A. Because I am better qualified to testify.

Q. Are you recommending any disciplinary action against any of the local servicemen?

A. That is not the scope of my job. I'm here to help identify what the nature of the problem is, and hopefully we can work together to get it fixed.

Q. Does U S West have a strategic plan for upgrading or replacing any of the Valentine Exchange?

A. Actually, as we speak, we are in the process of upgrading some of the carriers on that particular route, one of the other legs from SLC 8 to size core SSCM.

Q. And what is the current status of any strategic plans for upgrading?

A. Well, the upgrading is done on a case-by-case basis, based on the number of spare facilities, new customer services that are required. We look at maintenance; we look at a lot of things. It's done on a year-by-year basis. We don't have strategic plans that go out 5 or 10 years.

Like I said, currently we are because of -- primarily because of growth requirements, we are adding some size core carrier systems on the route. And as coincidental to that we are replacing existing SLC 8 carriers and moving those workers over to the size core

equipment.

Q. Is it true, Mr. Peters, that U S West has announced an intention to sell the Valentine Exchange?

A. It's my understanding that it is one of the exchanges that we're looking at selling.

Q. Are you aware of any corporate policy within U S West to not dump any dollars into exchanges that they are intending to sell?

A. I don't know that there's a policy that that's blatant. Each and every exchange, whether it's one that possibly could be sold or not, we are providing the dollars to maintain it and add to it as it's reasonable business decision to do it.

Q. Well, are you under any directives from any of your superiors not to take this system serious in any manner? In other words, the problems that these people have had?

A. I am not.

Q. And are you under any type of orders or directives not to spend any more money on this exchange than is absolutely necessary?

A. I am not.

Q. Are you aware of such orders being out there that you haven't been relayed to you yet?

MR. WELK: Objection. That calls for pure

speculation.

MR. HOSECK: I'm asking him what he's aware of.

COMMISSIONER NELSON: Okay. We'll note it and I'll take it under advisement and you can proceed.

A. Is that a direction to answer the question?

COMMISSIONER NELSON: Yes, it is.

A. Okay. I'm not personally aware of any decisions like that or orders like that. Like I said, the company is being run on a business basis. We look at each and every exchanges. We look at what the requirements are. We are endeavoring to budget and spend money to meet the needs of the exchanges.

Q. Well, you previously testified that it would cost 4.4 million dollars to replace the cable in this system and 1.2 million to replace the carrier. Are you about to make that expenditure if you're going to sell this exchange?

A. Regardless of what happens with selling or retaining the exchange, we would not schedule that kind of expenditure. That would not be a prudent business decision.

Q. But in the meantime, you do agree these people, these complainants here today, have a right to basic telephone service?

A. Of course.

MR. HOSECK: No further questions.

COMMISSIONER NELSON: Do you have any questions?

COMMISSIONER SCHOENFELDER: Yes, I have several. First, let's go to the LATA map up there.

A. Okay.

COMMISSIONER SCHOENFELDER: Now, you've corrected it so Miss Figert lives within the LATA within U S West territory. Where is the LATA boundary? These people are still in a South Dakota LATA; am I not correct?

A. The LATA is, as I understand it, is a Nebraska LATA that crosses the state boundary.

COMMISSIONER SCHOENFELDER: And then you must have sometime gotten approval to use the 605 prefix in that LATA; right?

A. I'm assuming, yeah.

COMMISSIONER SCHOENFELDER: Because everybody out of the Valentine switch could not have a 605 area code, could they? Am I not correct?

A. 605, I'm sorry, I'm not familiar with the area codes up here. Nebraska?

COMMISSIONER SCHOENFELDER: No, it's South Dakota.

A. Is that different than the area code for the rest of the people in Valentine?

COMMISSIONER SCHOENFELDER: I don't know because that's Nebraska. That would be a Nebraska area code.

A. Then what they did is they partitioned the switch so it recognizes 10-digit calling numbers.

COMMISSIONER SCHOENFELDER: But if they reside in the Nebraska LATA, they have to have some kind of permission out of MFJ to cross that LATA line, if I'm correct.

A. Wait a minute, we got the LATA -- let me go up to the map.

COMMISSIONER SCHOENFELDER: Because you were talking about carrying the long distance and I want to know if they're in the South Dakota LATA or Nebraska LATA.

A. I think it's one LATA.

COMMISSIONER SCHOENFELDER: South Dakota is a one LATA state. I don't know about Nebraska. I don't think it is.

A. I think what happened is this is the state line here. I think the LATA that's associated with Nebraska crosses into South Dakota. And even though this area is South Dakota, it's still a part of the

Nebraska LATA down here. So we couldn't carry a ca
for instance, from here or from here. It's actually
out of the switch here at Valentine up to Mission.

COMMISSIONER SCHOENFELDER: You can't even carry it over to Winner?

A. Right.

COMMISSIONER SCHOENFELDER: You have to han it off to an interexchange carrier?

A. That's exactly right.

COMMISSIONER SCHOENFELDER: Talk to me abou the Valentine Erickson switch. Is it digital?

A. Now you're asking me questions that I wasn' studied for. It's my understanding that the Erickson switch is a digital switch.

COMMISSIONER SCHOENFELDER: But is this switch equipped to do Caller ID or to do ISDN?

A. I don't know. I mean, it is a digital switch. I don't know whether it's been programmed or had that feature packet into it.

COMMISSIONER SCHOENFELDER: But U S West deployed a lot of Erickson switches at one time that were digital but were just basic, and that advanced services could not come off of those switches. Do you know if the one in Valentine has advanced services?

A. I don't know.

COMMISSIONER SCHOENFELDER: Okay. So we have the Klein School over here. And I have a real concern. I am concerned about everyone having good quality service. I have a major concern with the school that cannot, under the environment, now receive Internet service. Is there some way with this switch or with your carrier system, some way that there can be an inexpensive fix for that Klein School?

A. Not that I know of.

COMMISSIONER SCHOENFELDER: There's no electronics? There's no way you can load that -- I realize it's a long ways from the Valentine switch and I understand that the degradation and so forth to a certain extent. The technology leaves me at some point in time. But I do know there's sometimes electronic fixes you can do to boost the signal to help --

A. The problem --

COMMISSIONER SCHOENFELDER: -- the access for those schools?

A. The analog carrier is not capable with digital services. So the only way we could provide like a 56 kilobyte line, which was requested earlier, would be to replace all of the analog carrier with digital carrier.

COMMISSIONER SCHOENFELDER: So the SLC a

system is analog?

A. Yes.

COMMISSIONER SCHOENFELDER: And it doesn't have the capability to carry Caller ID? You said that.

A. Right.

COMMISSIONER SCHOENFELDER: But it can carry other CLASS services?

A. Well, it's not really carrying CLASS services because those services are resonant in the switch.

COMMISSIONER SCHOENFELDER: Can I ask you this then? Does Signalling System 7 operate on this system?

A. Signalling System 7 is an out-of-band call set up between switches, so it really doesn't affect the outside plant.

COMMISSIONER SCHOENFELDER: Doesn't the FCC require you to have Signalling System 7 on all systems now so that you can do number portability? Isn't that a requirement you have under the '96 Telecom Act?

A. Yes, but we're mixing apples and oranges.

COMMISSIONER SCHOENFELDER: Straighten me out then.

A. You have a network where you have a switch here and a switch here. System 7 is the way the trunks

and the call is set up between the two switches. When you have customers down here, they're unaffected by System 7. System 7 is not a pertinent question.

COMMISSIONER SCHOENFELDER: It doesn't go th local loop, is what you're telling me?

A. Right, exactly.

COMMISSIONER SCHOENFELDER: I would really appreciate it if you look at a fix for that school.

A. Wireless satellite.

COMMISSIONER SCHOENFELDER: Actually, I believe that you could look at an alternative method for the school and suggest something. That would be my recommendation. There's been a lot of back and forth, and I just -- I'm just -- I think I've gotten to the heart of the question because I read some of this stuff.

And one of the things I think some of the complainants are talking about is by the time the repairman gets out there -- I happen to have lived in country a lot like this, and when you have rain, you have a lot it and then it dries out very quickly. And what they're saying is the moisture that's inside of one of your carrier systems or inside of one of your pedestals, wherever it is the moisture gets in, that it's dried out by the time the repairman gets there.

And what they're asking U S West to do, if I understand this correctly, is to come out there to see if they can find at one time before it's dried out. Is that impossible for you to do, or can you focus on trying to get that done?

A. I think that U S West is willing to try to partnership with the people that's out there and see if we can work something out where we can have better communications and resolve the problems that are out there.

I think that will take some further discussions with the local people and the local supervisor to having set that up, but I'm certainly willing to take that back to him and discuss it with him.

I think the way you positioned it is a little bit different than what I thought I heard earlier. And the way that you positioned it is can we do this to resolve this problem, not necessarily to have instant access to technicians on a forever basis. And I think that the way you positioned it is something that is feasible.

COMMISSIONER SCHOENFELDER: Okay. The next question you talked about rolling out a new kind of carrier system in part of the Valentine Exchange?

A. Yes.

COMMISSIONER SCHOENFELDER: Tell me what that carrier system does.

A. That is a size core anklog carrier system.

COMMISSIONER SCHOENFELDER: It's still an analog carrier system?

A. Yes.

COMMISSIONER SCHOENFELDER: Why would you deploy something that's not state-of-the-art?

A. Because you cannot mix analog and digital signals on the same cable. Since there is only one cable that serves that area, it either has to be 100 percent analog or 100 percent digital. And for us to go out and replace all of the analog carrier and put digital out there, it would again be many millions of dollars.

COMMISSIONER SCHOENFELDER: Okay. I think that's all I have.

COMMISSIONER NELSON: I have a couple. Let's go back to the CLASS services and which ones are not really available there. Voice messaging wouldn't be available, Caller ID wouldn't be available, right?

A. First off, I don't know what the switch generic is as far as what functions and features have been built into the switch. So I have to answer the

question based on what types of services might be possible to be provided.

And whether they're provided today or not, don't know. Voice messaging, I believe, is not something that's affected by analog carrier because that is a service that's resonant in the switch, just like call forwarding.

COMMISSIONER NELSON: So it is available?

A. If that switch has been upgraded to provide that service.

COMMISSIONER NELSON: You brought the subject up about CLASS services would be available, some are available, and some are not. But the only CLASS service you talked about being available was call forwarding.

A. I was using that as an illustration.

COMMISSIONER NELSON: So tell me which ones you think are available and which ones you think are not available.

A. Can I have a moment?

COMMISSIONER NELSON: Sure.

(DISCUSSION OFF THE RECORD.)

A. I think that would be a good discussion, and I would be certainly willing to do that and do a late filing to provide the features that are available at

the switch.

COMMISSIONER NELSON: That would be acceptable.

When you talked about the repair record, you said that possibly when somebody else had complained, you might have fixed someone's problem. And then somebody else complained, but you might have had to take the system out of service for everybody in order to fix the next person who complains problem.

Could you find in your records and determine when, if any, time during this period between October and January, during the complaint period, that you may have taken their services out to repair someone else's services so we know that that's indeed why they may have been with or without service?

A. I will provide you what we have in our records. Unfortunately, the records normally doesn't have that much detail. It's usually a one-line note, fill where the entry may be something like, you know, fixed bad cable pair or replaced channel card. So it really doesn't give us a history of everything the technician had to do.

The best thing I could probably do would be to sit down with the technicians and ask them to give me, to the best of their memory, you know, when those

kinds of things may have happened. And if you would like me to do that, I'll be happy to meet with the technicians and get that information.

COMMISSIONER NELSON: Okay. That would be acceptable too. You talked about physical limitation you know, when they were talking about the Internet a whether or not people should have access to it or not And what did you mean by physical limitations?

A. Given the distance from the central office switch and where the customer resides, or in this case where the Klein School is located, there are technical physical limitations as to what type of services we co provide out there. And in this case we could not provide, for instance, a 56 kilobyte service that far out. It just physically won't work.

COMMISSIONER NELSON: Given the systems that you are choosing to operate there with; right?

A. I would say unless we replaced it with fiber and digital carrier of some type, possibly digital carrier will work on the copper. I would have to go back and do a more thorough analysis, but I don't know if even the physical copper with digital carrier would be good enough out there.

COMMISSIONER NELSON: Earlier there was testimony as to the different schools. Some were

served by U S West and some were served by Golden West. Is it fair for me to assume that Golden West would have the same physical limitations that U S West would to serve their schools?

A. Using the same technology, yes. And that's why our attorney was trying to get more information, and the witness didn't have it as to where Golden West has central offices and how close those schools are to the central office. In areas where the customers are very close to the central office, it's much easier to provide those kind of services. So I don't know what the Golden West network looks like.

COMMISSIONER NELSON: Would you say that in terms of providing like the Internet services and stuff for these people, unless you go to this more digital kind of system, that that's going to be very viable out there? Is that what you're saying?

A. I'm saying that they claim they have Internet access now. I think that that's great that they do, but certainly it's not something that we think is really viable over the network that's there. I'm glad that they have some access. But to provide higher speeds like 56 kilobyte, I don't see a design that will work that far out without major rebuilding of the network.

Now, I did say kiddingly to Commissioner Schoenfelder that maybe a wireless solution would work. And, in reality, maybe that is a solution that would work. You know, some other technologies could be investigated. Obviously, in this location there are limitations because it's a long ways from, you know, an area that might support those type of technologies.

COMMISSIONER NELSON: Am I to assume, too, that -- you talked about most your cable was underground, so is that -- what percent would be underground?

A. 100 percent.

COMMISSIONER NELSON: It's 100 percent underground. So why would the waving of the wires and stuff be a problem?

A. The cable, when it's in the telephone closure, the closure is above ground, and as you get changes in pressure, like the wind that we had this morning as we were driving here, even though you're in a telephone closure, it can still create pressure difference between the outside and inside of the closure and it can cause the wires to move.

COMMISSIONER NELSON: In 1995 and 19 -- through 1998 they said that they had a lot more problems than they seemed to be having today. And yes

said you replaced 150-some feet of cable out there. So you think this may have resolved the problems? That the only thing you did is replace the cable?

A. I don't have a full history of everything that we've done out there. Our records reflect that there have been certain sections of cable that we have replaced, although they have not been long or lots of sections.

Obviously, there would be times when we've done repair work on closures, or I know we replaced some of the older closures out there with newer closures and rebuilt those sections of the cable that are above ground where they loop through the closures. But the statement that I made about the 150 feet went more to the issue that there has been a history of trouble out there and it has been difficult to isolate.

And I'm sure that we have gone out on more than one trouble repair call on a number of the customers where we couldn't -- I mean we did things that seemed to help, but it never completely fixed the problem. We believe that when we isolated the trouble to the wet cable, replaced that 150 feet of cable, tha it helped to eliminate the problem on a more permanent basis.

Now, because we hadn't had the type of called-in trouble reports that we had been seeing previously, that led us to believe that we had completely fixed it. To the degree that the customers may still be experiencing some problems, we want to make sure that we get those problems fixed as well, so that will be an ongoing effort.

COMMISSIONER NELSON: What causes the false ring?

A. It can be a number of things. It can be a bad circuit pack, or circuit pack that is starting to go bad that's giving false signals on the system. It can be stray electrical currents on the system, which may be either induced from the electrical lines or stray currents from lightning hits. It can be shorts that are being read as some kind of a signal on the line. It can be a number of things.

COMMISSIONER NELSON: What was the point you were making up there when you were on the map and talking about the Figert thing and the long distance, you couldn't be responsible for the long distance when they disconnect?

A. The point I was making is that not all trouble reports are necessarily associated with the local loop. For instance, a dropped long distance

may be something that happened elsewhere on the network such as in the long distance carriers network or at one of the intervening switches.

So the only point I was making is that I think it's human nature that when you already believe that you're having trouble with your local phone line, that every time you experience something, it is associated with the local line. And I was making the point that that's not necessarily true.

COMMISSIONER NELSON: But it could be true, right?

A. I don't know of anything that would cause it to drop in that way. Most of the trouble that we normally experience are more like static conditions on the line. You know, it's not something that drops a call and then you hang up and immediately a dial tone again and you can make another call, which was what was happening in that case. I suppose it could happen. It's just not something that I would expect to be associated with the carrier or the cable.

COMMISSIONER NELSON: But, you know, when things get wet and the connection is not always good, I mean, it could have been coincidental that they happ to be on a long distance call. And people's calls because I've had problem on my line and lost local

calls as well as sometimes losing long distance. Now it could be when there was a long distance carrier. Wouldn't water sometimes disconnect people if the lines were wet?

A. It has been my experience that normally you don't have symptoms that -- say I get dropped in the middle of the call, which means the line went dead and then immediately by the time I hang up and take the receiver off the hook again, it's already restored. I'm not saying that it wouldn't happen, I'm just saying it's not generally what I would expect to be a local problem.

COMMISSIONER NELSON: Okay. I think that's all the questions I have.

COMMISSIONER SCHOENFELDER: I have one more. Explain the 411 phenomena here.

A. I don't know what's causing that.

COMMISSIONER SCHOENFELDER: Is that a switch or a carrier problem?

A. I want to have the local switch technician look into that. And probably we'll talk to the switch planner and engineer for Valentine and see if they can do some more research on that. It appears to me that it could be possibly the switch, there's something wrong in there, or it could possibly be the SLC 0

carrier, if we got stray current and that current is being interpreted by the switch as a dialed digit.

Given the fact these are three-digit numbers that are being "called," it possibly could be somethin associated with the loop plant. We will want to do some further checking. Because, like I said, I wasn't aware of that problem being that predominant with so many people, and so we definitely -- it might be a switch. If it's that widespread, it may not. We'll have to do further checking.

COMMISSIONER SCHOENFELDER: I have one point. Staff, are you calling witnesses?

MR. HOSECK: No

COMMISSIONER SCHOENFELDER: I have somethin that I don't want to have dropped because many of the complaints have to do with billing problems also and you agreed to have someone take care of the billing problems with them. I want to have at least some way that we get a report back on those billing problems before we make a final decision in these cases.

MR. WELK: How would you like to do that?

COMMISSIONER SCHOENFELDER: I'm looking for discussion. I understood you were going to work those out and it wouldn't be this witness. But I wanted you to, as the attorney, to make sure so that the complainants know that if they're not satisfied, they need to let us know some way.

MR. WELK: I would like to have them meet with Colleen with exhibits we've got and have Colleen be the front person on that so she has what the complaint is, what the bill is, who to report back to. And then I would propose, Commissioner Schoenfelder, that we then give you a report back on what Colleen has found and what she has done.

COMMISSIONER SCHOENFELDER: I would expect the complainants then to at least let us, you know, know whether they're satisfied or not with the billing problems.

MR. WELK: I would expect we copy the report to the complainants and if they're --

MS. SEVOLD: I think some of them have already left. I'm concerned about getting all of them, a process where I can be sure I have all of them, because I think some of the complainants have already left.

MR. MILTON KLEIN: We entered some of Regina Lamoureaux's.

COMMISSIONER NELSON: Let's finish this and then we'll get to that. I have one more question. Is this SLC 8 considered an Anaconda carrier system?

A. Anaconda is a brand name. It is an analog carrier system like Anaconda, but it's manufactured.

COMMISSIONER NELSON: It just has a different name?

A. Right. They would use the same design and technical parameters.

COMMISSIONER NELSON: Different manufacturer?

A. Right.

COMMISSIONER NELSON: Thank you. Now we'll go back off the record and talk about the calendar.

(A DISCUSSION WAS HELD OFF THE RECORD.)

COMMISSIONER NELSON: Back on the record.

MR. WELK: I'll represent to the Commission

what we've agreed.

In response to Commissioner [illegible] Chairman Nelson's comments about the -- and my representation that we would assist the [illegible] with their billing, we have offered this [illegible]

That before we leave here, all of the complainants, to the extent they have all their [illegible] available, to provide them to Colleen Sevold, the manager of regulatory affairs, and she will [illegible] to resolve the billing disputes and to correct that [illegible] then to continue to communicate with the [illegible] as they receive their bills, because there may be [illegible] in the next billing cycle they haven't caught.

But then at the end when we believe we have rectified all that, we will provide a report to the Commission, with a copy to the complainants, so if the complainants believe that they've not been resolved, they would have the avenue to tell the Commission that their billing complaints have not been resolved.

COMMISSIONER NELSON: Thank you. Now [illegible] you like to redirect?

MR. WELK: No, I don't have anything [illegible]

COMMISSIONER NELSON: Do any of the parties want to ask any other questions?

MR. LAWRENCE KLEIN: I'm wondering if [illegible]

problem is revolved with him, or if we're going to have ongoing problems until somebody gets out there and finds out what's wrong?

MR. PETERS: What I would like to do is work through you folks and -- is it Milton Klein? Maybe Mr. Milton Klein would allow us to have him be the focal point, or the contact person, for all of you; and we can try to keep him involved and keep him informed of what's going on as we go through this analysis of the cable and try to do a more global analysis and repair.

At the same time, I would like to go back to our field technicians and let them know that the problem is perceived to be far greater than we realized before and try to effect some communication with each of you to work on your individual problems and see if we can get those fixed.

Obviously, there's been a lot of people here today that provided testimony, and it would be easier if Mr. Klein wouldn't mind if we kind of used him as a focal point. But we will be working with each of you individually.

COMMISSIONER NELSON: Mr. Klein, do you still have other questions that you want?

MR. MILTON KLEIN: Well, same logic I think

applies to the billing. I don't know whether we ... to ask that, but we have -- this is also a ... problem than the four people in here. And we ... addressed some of -- that some of the people ... indeed left that had billing questions.

Some people had in writing ... they would and that some of that testimony was ... disputed, but those people -- it's also ... also ought to be handled in the same fashion as ... he's suggesting.

COMMISSIONER NELSON: Are you only ... about the people that were here today as witnesses?

MR. MILTON KLEIN: No. I'm asking about ... whole neighborhood. There's a number -- there's ... several individuals who indicated they had ... problems who weren't here today as witnesses.

MR. WELK: Billing issues, why, I was ... have one person that people call, all right, so ... way we don't lose track of this. So I think ... the person on the billing that ought to be the ... person so we can have one person to communicate ...

MRS. FIGERT: How do we reach her?

MR. WELK: She'll give you a card.

MR. RANDY KLEIN: She will handle the complainants?

MR. WELK: Any complaints you've got to the billing, we will have one person take care of it. All right?

MR. RANDY KLEIN: You mentioned in whatever you call this on the record, you said complainants, but some of us are not the four complainants.

MR. WELK: If you were here today and had a complaint, you shouldn't pay for something you didn't do.

MR. RANDY KLEIN: Like I said, I didn't know who to go to. AT&T?

MR. WELK: It is confusing, sir. Colleen has got plenty of cards.

COMMISSIONER NELSON: The billing relief you're talking about, though, goes to anybody that was here and/or complained; right?

MR. WELK: Right.

COMMISSIONER NELSON: Is that inclusive enough? Is that what you had in mind, because I heard you saying broader than that?

MR. MILTON KLEIN: I would respectfully request that she be asked to go through this exhibit that I put together and do all of the individuals who indicated that they had this problem should be contacted and have the problem resolved. That's what I

asked.

COMMISSIONER NELSON: That's what I [illegible] you were saying. Would that be agreeable?

MR. WELK: Do they have all their [illegible] attached? I didn't have time to go through.

MRS. SHERYL KLEIN: Not all of them.

MR. WELK: We need to know what the problem is with the bill. That's fine. I'm not playing the legal objection here. But the people that have a complaint, you have got to give Colleen the bill and what their problem is so when they call somebody else can say for customer X this is a $45 charge. Otherwise you're going to have people spend a lot of time so if you can have them put their bills together like yours are, you've got circles, that's the kind of thing we needs to go total them up and get rid of the [illegible].

COMMISSIONER NELSON: I think we will be agreeing to handle those complaints if they contact Colleen and submit a bill.

MR. WELK: Give them a bill and send it to Colleen.

COMMISSIONER NELSON: That would be agreeable then.

COMMISSIONER SCHOENFELDER: I think Mr. Peters is asking Mr. Klein to take the point [illegible]

of on who is having trouble problems. Is that what I understood or not?

MR. PETERS: Yeah.

MRS. FIGERT: Should we report problems to him then?

MR. WELK: No, no, no.

MR. PETERS: Let's clarify. I think what I'm asking is that everyone report their own troubles through the normal reporting process. But given the fact that we have ongoing work we'll be doing out there, as we are out there doing testing, we may from time to time call Mr. Klein and say, "You know, we're going to be out in this area on these days doing these tests."

There may be times we have to be disconnecting clients while we're doing testing and we need the people out in the area to generally know that we're going to be working at that on this week so that you guys are apprised of what we're doing.

On top of that, we will be trying to work through on an individual basis with the outstanding trouble that has been testified to today so that the people who have testified, we can work with them. I may need a more complete list of names and phone numbers from you since you know all the people. And we

can work with those people to try to solve their individual problems.

Generally, we may want to call Mr. Klein up and say, you know, "How does things seem to be going out there? Is it getting better? Is it staying the same? Is it getting worse? What type of problems, assuming there's some communication going on in the community of interest there, and he might be aware of that. If that is not something you can do, we need to know that right now.

MR. MILTON KLEIN: I'm not sure I can.

MRS. FIGERT: When we call in the complaints to U S West, we also need to let him know, don't we?

MR. PETERS: I don't know to what degree there's conversation.

COMMISSIONER NELSON: Let's just say that I think it's the company's responsibility to communicate with each of the people involved here and it isn't Mr. Klein's responsibility to do that. Now, if he were willing to do that, it's his decision.

But I think it's a whole lot cleaner if the company continues to contact the people who have complained and let them know what's going on and what it's going to happen, because that seems like an awful lot of responsibility.

MR. WELK: But the customer ought to assume the responsibility to report.

COMMISSIONER NELSON: They still have that responsibility, but the communications between the company and the complainants should go on not between Mr. Klein.

MRS. SHERYL KLEIN: We're not going to be a liaison.

MR. LAWRENCE KLEIN: I talked to Mr. Peters a while ago, and I asked him how come this outage wasn't reported. I reported it in, and it wasn't reported on my number. And evidently he hasn't got any record of it being called in. But I called it in. It wasn't him because his phone is out of order.

MR. RANDY KLEIN: The repair will be listed on mine if he looked under my number. He just looked under just the four complainants.

MR. LAWRENCE KLEIN: I understood that right?

MR. PETERS: We have 40 customers that worked on that route where you folks live, so I did not go through every 40 customers and try to build a history. I looked at the ones that --

COMMISSIONER NELSON: We do need to get back to redirect. Recross?

MR. WELK: I don't have any.

COMMISSIONER NELSON: Staff?

MR. HOSECK: No.

COMMISSIONER NELSON: Any final questions from the Commission?

COMMISSIONER SCHOENFELDER: No.

COMMISSIONER NELSON: Okay. Thank you.

MRS. JOANN KLEIN: May I ask you a question? Technically, all right, my phone is out. Should I have called in to say our phones are out. How would you like me then to tell you that I had phone service?

COMMISSIONER NELSON: Let's go back on. We're still on the record. And I think that since there aren't any questions for you, Mr. Peters, you're excused.

MR. PETERS: I can answer that question if you want me to. I think just as a way of clarification, one person can call in. We're not saying each individual person has to call, but when that person calls in, if they say, you know, I'm at such and such a phone number and my phone is out, and also I know for a fact that the following people have their phone service out and their phone numbers are whatever."

Then we can take a report on one phone call

for maybe two or three, four lines, just so we get it on the record that those other numbers were affected as well. So we're not trying to inconvenience you by asking each person individually to make the phone call.

MRS. JOANN KLEIN: Well, I just wondered how it would be helpful, you know, how could it be helpful.

MRS. FIGERT: Can I paraphrase your question? She doesn't have phone service. She's elderly. It's blizzarding out. She can't call U S West to report her outage. She can't call her son to report her outage. She can't call me to report her outage. She can't call anybody. That's her question. How is she supposed to let you know?

MRS. JOANN KLEIN: That's not what -- he's going to know. He's going to -- we have contact with Milton every day.

MRS. FIGERT: How?

MRS. JOANN KLEIN: He comes down. But how do I relay the fact that ours, too, was out?

MR. PETERS: If Milton has already called in and reported his trouble and he's not aware that you had trouble also, it would be helpful if after he became aware of the fact that your line was also out, if a second call was made. But if he's aware of your line being out before he makes his call, he can report

both telephone numbers on the same call.

COMMISSIONER NELSON: Sheryl, did you have a question?

MRS. SHERYL KLEIN: Yeah, I have two. Forgive me, it's getting late in the day. But I'm curious, given the absence of a long-term strategy, which you indicated, does this mean we can expect to be denied Internet access and other CLASS features that aren't yet articulated in the years to come?

MR. PETERS: Yes.

MRS. SHERYL KLEIN: Wonderful. Maybe I didn't want to ask that. Okay.

Secondly, your field technicians have made comments to me and my husband and others in the neighborhood something to the effect, "Gee, this is an old line. It ought to be replaced." What does that mean to you?

MR. PETERS: It means that they were individually frustrated with trying to locate a pair that was not easy to locate.

MRS. FIGERT: Could it also be interpreted they were giving a professional opinion, professional assessment of what they think could be done? It would make their job easier, too, wouldn't it?

MR. PETERS: I think that it's the analogy

would be that keeping an older car repaired is sometimes more frustrating than a newer car, but it doesn't mean that the old car doesn't work.

MRS. FIGERT: Are we allowed to give closing statements?

COMMISSIONER NELSON: Yes, we are. We'll get to that. Are there other questions for Mr. Peters?

Seeing no other questions, thank you, and you're excused.

Does the staff have any witnesses?

MR. HOSECK: No witnesses.

COMMISSIONER NELSON: Okay. Since staff doesn't have any witnesses, would the complainants like to make closing statement?

MRS. FIGERT: I would. I heard very little, but I did hear the word shareholder. And it seems to me the bottom line in connection with this entire process is financial. It is fiscal to me. That's what I'm interpreting.

As a business person for 33 years, I think I've heard a little bit about the difference between profits and service. Profits are nice; make shareholders happy. But if you're not providing service, you're not going to make profits. And if you don't have profits, you're not going to have

shareholders.

It's my closing argument that service is more important than profits and shareholders, because if you have one, you will have the other. It's kind of like the analogy of choosing for love or choosing for money. You choose for money, you lose both. You choose for love, you get both. Thank you.

COMMISSIONER NELSON: Thank you. Mr. [illegible]

MR. MILTON KLEIN: I don't have any [illegible] remarks other than what I stated in my summary -- my opening remarks.

COMMISSIONER NELSON: Sheryl.

MRS. SHERYL KLEIN: Well, I'm going -- leaving this meeting with a feeling of disappointment. The future sounds kind of bleak for my neighborhood unless you provide us relief. That's it.

COMMISSIONER NELSON: Lawrence?

MR. LAWRENCE KLEIN: I think I have -- assumed what's going on, and I think that they're trying to do their part. I feel they are. I don't think that we could expect the new cable out there, a way. I think they'll do their part. But we're going to have to make sure that there are -- they know what's going on.

COMMISSIONER NELSON: JoAnn.

MRS. JOANN KLEIN: I will keep a data diary of everything that goes on on the phone that's not right, and I will attempt to let people know when things didn't go right.

COMMISSIONER NELSON: U S West.

MR. WELK: I have no closing statement.

COMMISSIONER NELSON: Okay. Staff.

MR. HOSECK: Yes. Thank you. Madam Vice-Chairman and Commissioner Schoenfelder:

I think what we've heard today here is that here we sit on the edge of the 21st Century and these people need basic phone service and they also need phone service beyond the basic voice grade. As a matter of fact, they are not getting either.

And it appears to me from the approach that U S West has taken in this matter that they are not seeing the forest for the trees. The trees have come up in front of U S West for over a year in a series of complaints from these complainants.

And what is the solution? After these peopl go to the problem and the trouble of filing formal complaints with this Commission, and we come down here for a hearing, U S West comes up with what is called a "proactive testing system."

If this would have really been proactive, it

would have taken place well over a year ago and this probably would not have had to take place today, and these people could have gone on about their lives without them being interrupted in the manner that they have. I seriously question the seriousness of [illegible] in treating their customers fairly in this exchange.

And as the evidence has shown, their [illegible] in this matter is to sell the exchange. And in the meantime, these people have to live here, they have to call their doctors, they have to conduct their businesses, they have to take their kids to school. They have to do everything that ordinary people do in their lives when they depend upon reliable phone service. The phone service is not reliable.

And what do we get? A promise. A promise, mind you, that within 60 days testing will be done. There is no solution that's been brought before this Commission.

And in all due respect, I ask the Commission for an order. This has gone on long enough. These people should be able to rely upon the service, and there should be an order to upgrade this service. Thank you.

COMMISSIONER NELSON: Okay. Then we have to discuss the directing of the schedules, so let's go into

the record.

(A DISCUSSION WAS HELD OFF THE RECORD.)

COMMISSIONER NELSON: All right. We'll go back on the record. And we're going to do the briefs by February 15th. The report should be due by April 4th. The letter is supposed to go out to the customers that you have on your list there asking for them to send their bills to you about any disputed payment that they might have over the improper billing.

MR. WELK: Yes, Chairman. That is all the people that are proposed in Exhibit 11 by Mr. Klein, all those people?

COMMISSIONER SCHOENFELDER: The admitted and not admitted.

MR. WELK: Those admitted and not admitted.

COMMISSIONER NELSON: And you're going to report back on the 24th of March?

MR. WELK: Correct.

COMMISSIONER NELSON: That should close the hearing.

(THE HEARING CONCLUDED AT 6:10 P.M.)

STATE OF SOUTH DAKOTA)
)
COUNTY OF HUGHES)

I, LORI J. GRODE, Registered Merit Reporter and Notary Public in and for the State of South Dakota:

DO HEREBY CERTIFY that the above hearing, pages 1 through 209, inclusive, was recorded stenographically by me and reduced to typewriting.

I FURTHER CERTIFY that the foregoing transcript of the said hearing is a true and correct transcript of the stenographic notes at the time and place specified hereinbefore.

I FURTHER CERTIFY that I am not a relative or employee or attorney or counsel of any of the parties, nor a relative or employee of such attorney or counsel or financially interested directly or indirectly in this action.

IN WITNESS WHEREOF, I have hereunto set my hand and seal of office at Pierre, South Dakota, this 12th day of February 1999.

Lori J. Grode, RMR, CRR

Edward A. Peters, Mgr -Technical Writes
U S WEST – Interconnection Planning
700 W. Mineral, MN F20.16
Littleton, Colorado 80120
303-707-7035

U S WEST Communications, Inc.

May 7, 1999

FAXED TO 605-773-3809 on May 7, 1999

Mailed Overnight Delivery on May 7, 1999

William Bullard, Jr.
Executive Director
Public Utilities Commission
State Capitol Avenue
Pierre, SD 57501

Re. In the Matter of the Complaints Filed by Sheryl L. Klein (TC98-183), Joann Klein (TC98-184), and Lawrence Klein (TC98-199), Valentine, Nebraska, and Margaret Figert (TC98-212), Mission South Dakota, against U S WEST Communications, Inc. Regarding Poor Service and a Request to Have Lines Updated

Dear Mr. Bullard

This letter answers questions that the Commission asked of me at the February 3, 1999 hearing in this matter. At that time I committed to investigate those issues raised by the Commissioners and provide clarification.

The Commissioners asked me to provide them with a list of CLASS services that are available to the customers served by the Valentine switch. The following CLASS features are available at the Valentine Ericsson switch: Caller ID, Caller ID Blocking, Continuous Redial, Call Rejection, Priority Call, Selective Call Forwarding, Last Call Return, and Call Trace. All of these services are available to customers receiving their telephone service via analog carrier except Caller ID and Caller ID Blocking.

I was also asked to identify under what circumstances the U S WEST technicians might have to disconnect an entire carrier system while making repairs. The answer to this question is complex and depends on the nature of the trouble. U S WEST technicians attempt to first isolate the problem to a single user's circuit. If the problem is on the customer's circuit, and that service uses a single service card (i.e., channel card or repeater card), then the rest of the carrier may be unaffected. If the trouble is on the carrier pair or a common card shared by other subscribers, then the repair will likely affect all subscribers on that carrier system. Most of the time this would be a relatively short period of time. If the source of the trouble is not readily apparent it becomes necessary to isolate the cable plant by opening the circuit at the repeaters so cable sections can be tested to identify where the trouble is located. The repeaters are usually four to five miles apart and sometimes this type of testing requires the technician to drive to the next repeater and test back towards the open end of the circuit. This can result in the circuit being left open for a period of time consistent with the amount of time it takes to drive the distance between test points and back. This is a necessary part of testing circuits on loops serving customers who live a great distance from the central office. Of course, subscribers would

not know that their phone line has been affected by testing unless they attempted to use their phone during the testing period

Because service repair is complex and the work that is necessary differs from repair to repair, I cannot say how often non-complaining subscribers are affected by repairs. Many potential service interruptions to carrier subscribers are only momentary since many tests can be performed quickly and the carrier system restored to service. Other tests can last for a longer period of time while the technicians isolates the source of the problem. Trouble is more difficult to find and fix in extremely long loops, such as those in the Valentine Exchange. Although it is necessary from time to time to take a carrier system "down" to isolate the source of trouble, our technicians only do this when it is absolutely necessary.

Another item I was asked to investigate was if there is a switch problem that could cause subscribers to be billed for 411 calls. We have not discovered a switch problem that would cause these problems. It is possible that stray power on the carrier pairs, or current induced into the carrier circuit from lightening strikes may mimic the three digits "+-1-1". We can block 411 calls from being made on a per number basis so these kinds of calls do not appear on the customer's bill, but this "fix" would also prohibit subscribers from making legitimate 411 calls for directory assistance. After all repairs are made and quality service is restored to the affected customers in the "Klein Corner" area, we will review this issue and determine whether the cable replacements have also corrected this problem. If they have not, we will do additional work to resolve this issue.

Enclosed as Exhibit #1 is the initial carrier test results I committed to provide for this route in my April 2, 1999 letter. Initial tests were made at the last customer's location on the transmit signals for each carrier system. The test results show that all transmit signals were within the acceptable range.

Finally, I would like to address the questions and comments made by Mr. Hoseck in his "Supplement to Staff Hearing Brief" dated April 9, 1999. Mr. Hoseck states "U S WEST now proposes to take another 90 days to get the job done." I informed the Commission during the Klein hearing that U S WEST had already begun testing the cable serving both the Kleins and Ms. Figert, and I suggested that once testing was completed, if defects were found, that U S WEST would need additional time to correct the defects. I believe the 90 days I suggested in this case is consistent with what I requested of the commission in the Spear and Kieffer complaints which the Commission approved. I also believed when I made this request that it was a reasonable amount of time to do the necessary work. Nevertheless, we have continue to expedite this work and we are attempting to complete this work ahead of schedule. Mr. Hoseck also raises a question about the stocking, by U S WEST, of cable. This would require U S WEST to stock every possible size and gauge of cable that could be needed any where in the fourteen state region U S WEST serves (since changes in operations are regional in effect), and then to stock it in a length that would meet any possible requirement. This would be an extremely expensive and unreasonable undertaking for U S WEST. Rather than do this, U S WEST has established business relationships with different cable suppliers that requires them to stock commonly used size and gauge cables. Unfortunately, 19 gauge cable is not a commonly used type of cable, and therefore is not stocked.

It is U S WEST's desire to work with the Commission to further the best interest of the citizens of South Dakota. We are attempting to demonstrate our commitment by locating any and all sources of problems that could be causing the various Klein families, Ms. Figert, and surrounding neighbors, phone service problems. Potential problems with the 6,300 foot section of cable that we are replacing was extremely difficult to identify. In fact, if not for the fact that we tested this cable on two different days, and in two different ways, we would not have picked up the fact that this section of cable was damp and is beginning to create trouble for individual services. The reason we tested this cable twice was because the carrier tests indicated that the

service problems were not carrier related and experience has taught us that sometimes there is difficulty in identifying certain types of cable trouble. Given these facts, we tested this route a second time under different weather and environmental conditions, which allowed us to identify the early stages of cable problems.

We are replacing this 6,300' section of cable now, rather than trying to continue to maintain it, because it is our desire to provide quality voice grade phone service to the customers in this area. The fact remains, it is extremely difficult to ensure quality service 100% of the time when the service is located 35 to 40 miles from our central office, as it is in this case. And as hard as we try, there are times when the combined physical characteristics of a 40 miles pair of wires results in creating service problems that are disguised or hidden.

It is my recommendation that the Commission give U S WEST the opportunity to improve service for these customers by allowing us to complete the plan we have proposed to the Commission.

Sincerely Yours,

Edward A Peters

Edward A Peters, Manager
U S WEST Communications

cc: Carmon Hoseck
John Lehner
Colleen Sevold
Sheryl Klein
Todd Lundy
Tom Welk
Joann Klein
Lawrence Klein
Dennis Warner
Myron Wasson
Margaret Figert

xchange: _____ Date: _____

ocation: _____

ystem: 42 03-35

Power

Freq.	C.O.	Rept #1 IN	Rept #1 OUT	Rept #2 IN	Rept #2 OUT	Rept #3 IN	Rept #3 OUT	Rept #4 IN	Rept #4 OUT	Rept #5 IN	Rept #5 OUT	Rept #6 IN	Rept #6 OUT	SUB
94	+.3	-34.5	-2.5	-34.7	-3.3	-32.0	-2.4	-32.9	-2.3	-33.3	-2.5	-36.2	-3.2	-359
96	-.3	-34.3	-1.5	-34.7	-2.0	-31.9	-.9	-32.9	-1.0	-33.5	-1.5	-35.5	-1.4	-340
100	-1.8	-35.4	-1.5	-35.8	-1.8	-33.1	-.8	-33.8	-.9	-34.6	-1.5	-37.0	-1.8	-348
108	-1.3	-36.8	-1.9	-37.5	-1.9	-35.0	-1.0	-35.9	-.8	-36.1	-1.5	-38.2	-1.1	-354
116	-1.3	-37.0	-1.1	-37.6	-.9	-34.6	0	-35.6	+.3	-36.3	-.5	-38.0	-.1	-352
124	-.4	-37.3	-.1	-37.9	0	-34.6	+.8	-36.0	+1.0	-36.5	+.5	-38.2	+.8	-362
137	+1.4	-37.3	+1.5	-37.8	+1.3	-34.0	+2.2	-35.6	+2.5	-35.4	+1.8	-38.0	+1.7	-359
145	+2.4	-37.9	+2.0	-38.1	+1.6	-35.0	+2.8	-36.8	+2.5	-36.8	+2.0	-38.8	+1.8	-373

67														
77														
2A 20														
2Y 2B														
2D 12														
52														-11.0
60 80														-115

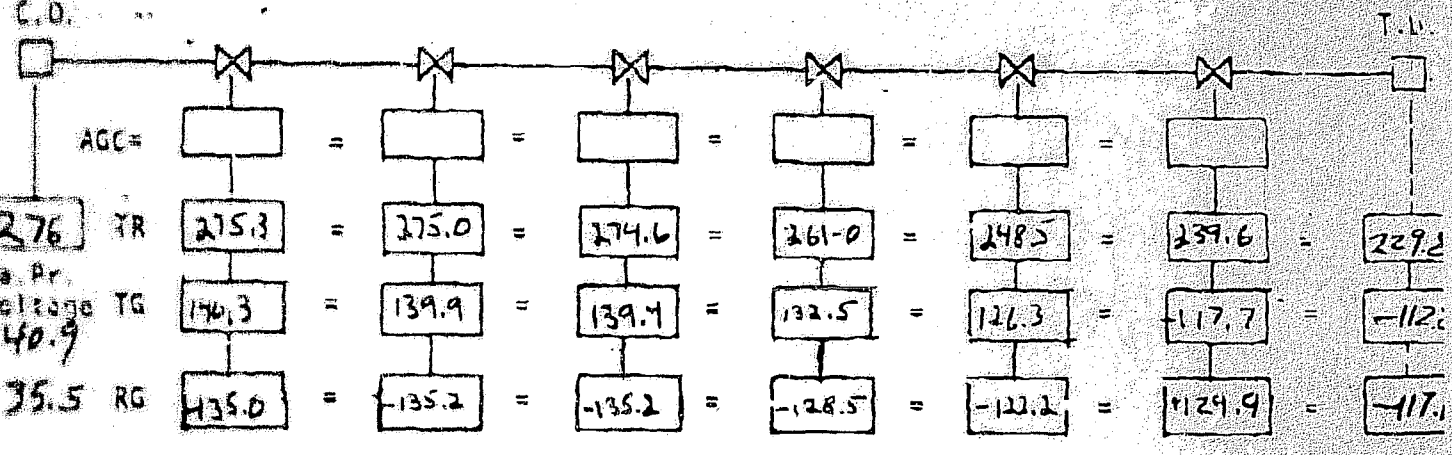

tes: _____

nange: _____ Date: _____

ation: _____

tem: Sys 43 03, 34

Power

Freq.	C.O.	Rept #1 IN	Rept #1 OUT	Rept #2 IN	Rept #2 OUT	Rept #3 IN	Rept #3 OUT	Rept #4 IN	Rept #4 OUT	Rept #5 IN	Rept #5 OUT	Rept #6 IN	Rept #6 OUT	SUB
84	-2.5	-34.1	-2.5	-33.9	-2.8	-31.5	-2.4	-33.1	-2.5	-37.2	-3.3			-35.0
92	-1.9	-34.5	-1.8	-34.9	-2.0	-32.1	-1.5	-33.8	-1.8	-33.6	-2.5			-35.2
100	-1.3	-35.4	-1.6	-34.8	-1.8	-33.1	-1.3	-34.4	-1.1	-34.6	-2.1			-35.8
108	-1	-36.5	-1.8	-36.0	-1.5	-34.5	-1.1	-35.8	-.8	-35.8	-1.8			-36.9
116	-.3	-36.6	-1.1	-36.3	-.5	-34.4	-.3	-35.9	0	-35.8	-.9			-36.9
124	+.9	-36.8	+.3	-36.3	+.8	-33.9	+1.1	-35.5	+1.6	-35.3	+.8			-36.5
132	+1.6	-36.9	+1.5	-36.5	+1.8	-33.3	+2.1	-34.8	+2.5	-35.4	+1.9			-36.4
140	+2	-37.2	+2.5	-36.9	+2.0	-34.3	+2.5	-36.3	+3.0	-36.3	+2.0			-36.9
4														
12														
20														
28														
36														
44														
52														-11.2
60														

5/8

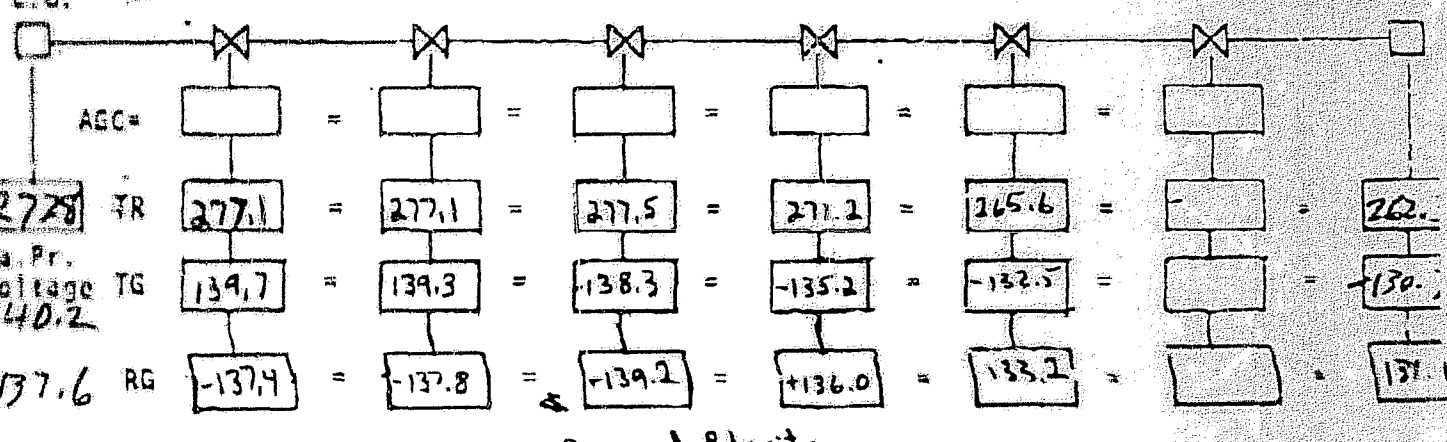

Notes: Reversed Polarity

change: _____ Date: _____

ication: _____

System: 5x544 @3-33 Power

Freq.	C.O.	Rept #1 IN	Rept #1 OUT	Rept #2 IN	Rept #2 OUT	Rept #3 IN	Rept #3 OUT	Rept #4 IN	Rept #4 OUT	Rept #5 IN	Rept #5 OUT	Rept #6 IN	Rept #6 OUT	SUB.
88	-2.2	-34.2	-2.8	-37.8	-3.0	-32.0	-2.6	-33.5	-2.8	-33.8	-3.5	-31.9	-2.9	-23.5
92	-1.9	-34.8	-2.1	-34.6	-2.5	-32.3	-2.0	-34.0	-1.5	-34.1	-2.5	-33.1	-2.7	-24.5
100	-.9	-35.0	-1.5	-34.3	-1.4	-32.5	-1.0	-34.5	-.5	-34.3	-1.3	-32.3	-1.1	-24.2
108	-.5	-36.0	-1.8	-35.8	-1.1	-33.9	-.8	-35.8	-.3	-35.8	-.9	-33.5	-.5	-25.0
116	0	-36.8	-1.5	-36.8	-.8	-34.2	-.3	-35.9	+.3	-34.3	-.6	-34.5	-.8	-25.3
124	+1.0	-36.8	+.1	-36.5	+.5	-34.2	+1.1	-35.5	+1.5	-35.5	+1.0	-33.2	+1.7	-25.5
132	+1.5	-37.5	+.9	-36.9	+1.2	-34.0	+1.5	-35.6	+2.2	-35.5	+1.8	-33.2	+2.6	-24.6
140	+2.2	-37.8	+2.0	-37.5	+1.9	-34.8	+2.5	-36.5	+2.8	-36.8	+2.1	-34.2	+2.5	-24.2

4														
12														
20														
28														
3E														
44														
52														
60														-14.5

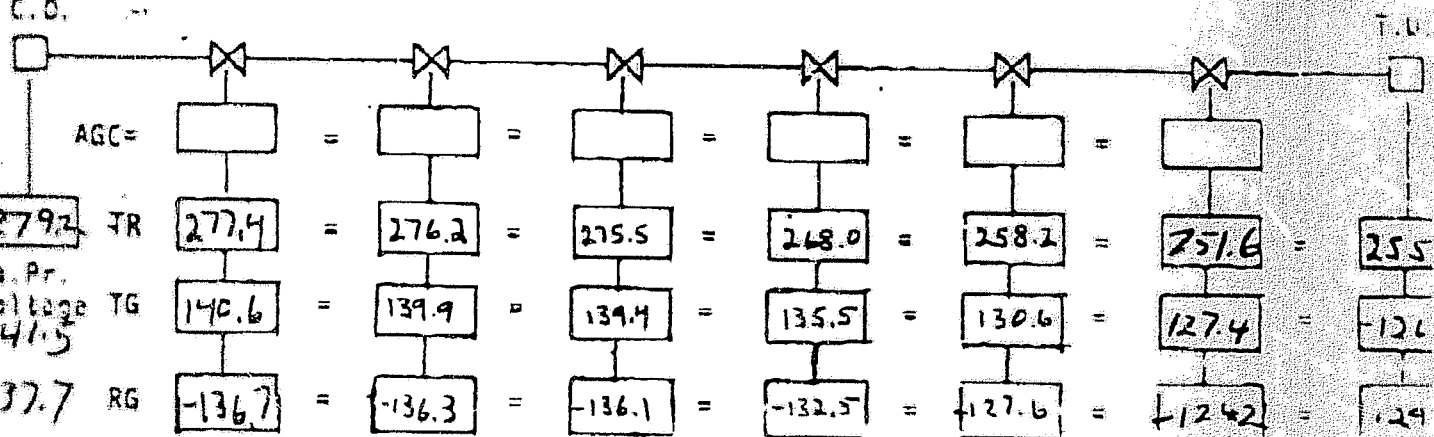

Notes: _____

xchange: Date:

ocation:

ystem: Sys 45 - 03 32 Lamp Power

Freq.	C.O.	Rept. #1 IN	Rept. #1 OUT	Rept. #2 IN	Rept. #2 OUT	Rept. #3 IN	Rept. #3 OUT	Rept. #4 IN	Rept. #4 OUT	Rept. #5 IN	Rept. #5 OUT	Rept. #6 IN	Rept. #6 OUT	SUB
96	-2.8	-35.0	-2.9	-34.3	-2.8	32.6	-3.3	-34.0	-2.5	-32.9	-3.5			-40.9
104	-1.6	-35.0	-1.9	-34.3	-1.6	32.8	-2.1	-34.0	-1.0	-33.3	-2.1			-41.2
112	-1.4	-36.2	-2.0	-35.8	-1.6	33.1	-2.0	-35.4	-1.3	-34.5	-2.8			-42.9
120	-.8	-36.8	-1.9	-36.5	-1.0	33.8	-1.5	-37.0	-1.3	-36.3	-2.5			-43.4
128	-.1	-37.5	-1.5	-37.1	-.7	34.5	-1.1	-37.0	0	-36.3	-.9			-43.8
136	+.5	-37.8	-.5	-37.4	+.3	34.4	0	-36.5	+1.1	-35.8	+.1			-44.0
144	+1.5	-37.9	+.6	-37.5	+1.3	34.6	+.9	-36.6	+2.2	-35.3	+1.3			-44.1
152	+2.7	-38.1	+1.6	-37.8	+1.8	35.0	+1.5	-37.5	+2.9	-36.0	+1.4			-44.8

4														
12														-22.4
20														-16.4
28														-2.2
36														-2.2
44														-12.2
52														-11.1
68														-7.5
60														-10.1

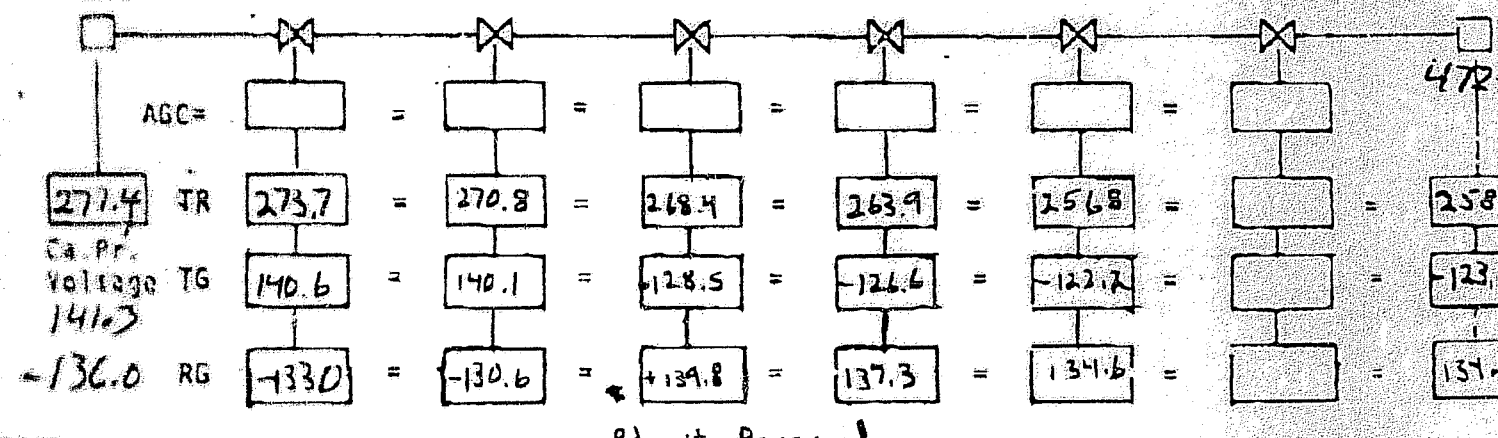

otes:

xchange: _____ Date: _____

ocation: _____

ystem: #6 03-31 Power

Freq.	C.O.	Rept. #1 IN	Rept. #1 OUT	Rept. #2 IN	Rept. #2 OUT	Rept. #3 IN	Rept. #3 OUT	Rept. #4 IN	Rept. #4 OUT	Rept. #5 IN	Rept. #5 OUT	Rept. #6 IN	Rept. #6 OUT	SUB.
84	-2.5	-34.8	-2.8	-34.0	-3.0	-32.0	-2.8	-33.1	-2.5					
92	-2.0	-35.4	-2.2	-34.5	-2.5	-33.1	-2.5	-34.5	-1.3					
100	-1.0	-35.8	-1.8	-35.1	-1.8	-33.1	-1.1	-34.9	-.5					
108	-.8	-36.9	-1.9	-36.1	-1.5	-339	-.9	-35.8	-1.0					
116	.0	-37.3	-1.4	-36.5	-.8	-343	+.1	-35.8	+.3					
124	+.2	-38.1	-.8	-37.3	-.1	-34.8	+.8	-36.3	+1.5					
132	+1.8	-37.8	+1.2	-36.8	+1.4	-34.1	+2.5	-35.0	+3.5					
140	+2.3	-38.1	+2.0	-37.3	+1.8	-346	+2.8	-36.5	+3.0					

4														
12														
20														
28														
36														
44														
52														
60														

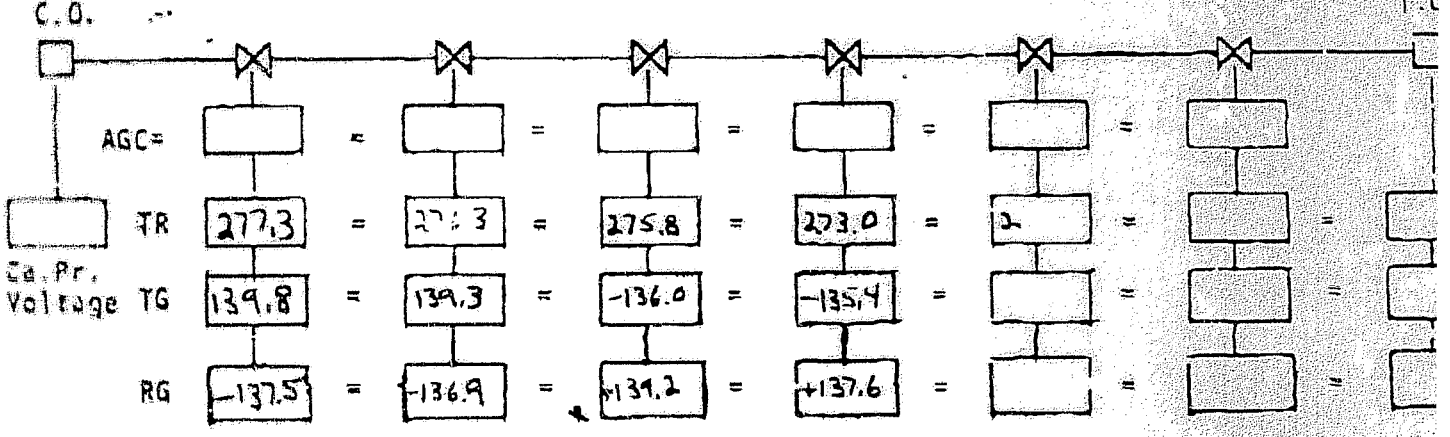

Notes: Reversed Polarity

RECEIVED
FEB 16 1999
SOUTH DAKOTA PUBLIC
UTILITIES COMMISSION

BEFORE THE PUBLIC UTILITIES COMMISSION
OF THE STATE OF SOUTH DAKOTA

IN THE MATTER OF THE COMPLAINT FILED BY SHERYL L. KLEIN, VALENTINE, NEBRASKA, AGAINST U S WEST COMMUNICATIONS, INC. REGARDING POOR SERVICE AND A REQUEST TO HAVE LINES UPDATED	TC 98-183
IN THE MATTER OF THE COMPLAINT FILED BY MRS. CLIFFORD (JOANN) KLEIN, VALENTINE, NEBRASKA, AGAINST U S WEST COMMUNICATIONS, INC. REGARDING POOR SERVICE AND A REQUEST TO HAVE LINE UPDATED	TC 98-184
IN THE MATTER OF THE COMPLAINT FILED BY LAWRENCE KLEIN, VALENTINE, NEBRASKA, AGAINST U S WEST COMMUNICATIONS, INC. REGARDING POOR SERVICE AND A REQUEST TO HAVE LINES UPDATED	TC 98-199
IN THE MATTER OF THE COMPLAINT FILED BY MARGARET FIGERT, MISSION, SOUTH DAKOTA, AGAINST U S WEST COMMUNICATIONS, INC. REGARDING POOR SERVICE AND A REQUEST TO HAVE LINES UPDATED	TC 98-212

U S WEST COMMUNICATIONS, INC.'s BRIEF

U S WEST Communications, Inc. ("U S WEST") submits this brief in response to the Hearing Brief filed by Staff.[1]

I. Damages are limited pursuant to ARSD 20:10:07:05 and the terms of U S WEST's Network Services Tariff.

Staff asserts that if the Commission finds sufficient facts of inconvenience suffered by

[1] The first two pages of Staff's brief merely cite various statutes. No attempt is made to apply the law to the facts in this case. Accordingly, U S WEST will limit its response to that portion of Staff's brief which addresses the issue of damages.

the complainants, it may award damages for inconvenience under SDCL 49-31-1.1.[2] Staff Brief at 2-6. Staff's argument relies on two underlying premises: telecommunications customers have an unrestrained right to claim damages before the Commission and U S WEST's tariff, which attempts to limit its liability, is invalid and unenforceable. Staff Brief at 2-4. Staff's arguments are misplaced because they ignore ARSD 20:10:07:05 and the Commission's Order Approving Tariff Revisions dated December 22, 1993 ("Order").[3]

Staff relies on SDCL 49-31-1.1. It provides:

> Any person claiming to be damaged by any telecommunications company or motor carrier may either make complaint to the commission or may bring suit on his own behalf for the recovery of damages in any court of competent jurisdiction in this state, but no person may pursue both remedies at the same time.

This statute provides only for an election of remedies. It does **not** address damages.

SDCL 49-13-14 provides:

> The commission may determine the extent of any injury or damage which it finds to have been sustained by any person, telecommunications or motor carrier. If the commission determines that any person is entitled to reparation or to an award of damages, the commission shall make an order directing the telecommunications company or motor carrier to pay to such person the sum of money to which he may be entitled, on or before a named day.

(emphasis added). SDCL 49-31-14 provides no guidance in terms of determining the type of damages to which a customer "may be entitled." However, the Commission's own rules and the Order limit any damage award in this case.

ARSD 20:10:07:05 provides:

> If the subscriber's service is interrupted for reasons other than the subscriber's negligence or a willful act of the subscriber and the service remains out of order for more than 24 hours after being reported or found to be out of order, the telecommunications company shall make an adjustment or refund to the subscriber. The refund to the subscriber shall be the pro rata part of the monthly charge for the period of days and for that portion of the service and facilities rendered useless or inoperative by the outage. The refund may be accomplished by a credit on subsequent bills for telecommunications service.

---

[2] The complaint filed by Sheryl and Milton Klein is the only complaint that seeks compensatory damages in excess of a credit or refund for days the complainants were without service.

[3] A copy of the Order is attached as Exhibit B to the answers filed in dockets TC 98-199 and TC 98-212.

(emphasis added). The Commission is bound by its own regulations and cannot engage in selective enforcement. State ex rel. Anderson-El v. Shade, 510 N.W.2d 805 (Wis. App. 1993), Hanks v. Dep't of Social Services, 426 N.W.2d 759 (Mich. App. 1988). Applying ARSD 20:10:07:05, the Commission cannot award any damages for service interruptions or outages other than an adjustment to the complainants bills.

U S WEST's Network Services Tariff ("the Tariff"), which was approved by the Order, is consistent with ARSD 20:10:07:05 and compels the same result. It provides at Section 2.4.1(A)(1):

> The Company's liability, if any, for its willful misconduct is not limited by this Tariff.[4] With respect to any other claim or suit, by a customer or by any others, for damages associated with the installation, provision, preemption, termination, maintenance, repair, or restoration of service, the Company's liability, if any, shall not exceed an amount equal to the proportionate part of the monthly recurring charge for the service for the period during which the service was affected. This liability shall be in addition to any amounts that may otherwise be due the customer under this Tariff as an allowance for interruptions.

Answer to Complaint and Certificate of Service, Exhibit A (emphasis added).

U S WEST filed the Tariff pursuant to SDCL 49-3-12.2.[5] Tariffs filed pursuant to SDCL 49-31-12.2 are not mere contracts, but have the force of law. See Final Order and Decision in dockets TC95-100, TC95-118, TC95-119, TC95-127, TC95-135, TC95-136, TC96-001, TC96-002, TC96-003, TC96-004, TC96-005, TC96-006, TC96-008 (applying filed rate doctrine to bar refund to customers who received service and paid land development fee while Canceled Land Development Tariff was in effect). Accord Corporate Investigative Div. v. American Tel. & Tel. Co., 884 F. Supp. 220 (W.D. La. 1995).

---

[4] No allegation or evidence exists that U S WEST's acts in this case were "willful".

[5] SDCL 49-31-12.2 mirrors the filed rate doctrine which forbids a regulated entity from charging rates for its services other than those properly filed with the appropriate federal regulatory authority. Arkansas Louisiana Gas Co. v. Hall, 453 U.S. 571, 576, 101 S. Ct. 2925, 2930, 69 L.Ed.2d 856 (1981).

In this case, U S WEST went one step further: it sought and obtained the Order from which no appeal was taken approving the Tariff. The Order is presumed valid. SDCL 49-31-16 provides

> If any action or proceeding or order of the commission comes into question, the validity of the order is presumed. It is not necessary to allege or prove any fact upon which the validity of the order depends, but the burden is upon the party claiming the order to be invalid to plead and prove facts establishing invalidity.

(emphasis added). The Order limits the damages recoverable in this case.

Applying the Order, the complainants' damages are limited to the pro rata part of the monthly charge for the period of days and for that portion of the service and facilities rendered inoperative by the outage.

Staff cites authority for the proposition that inconvenience is a proper element of damages. Staff Brief at 4-6. Such authority is inapposite. None of the cases cited by Staff involved a tariff limitation such as the one applicable here or a regulation or order limiting damages. Thus, these arguments must be rejected.

II. The facts do not afford a basis for measuring the complainants' loss with reasonable certainty.

Alternatively, even if the Commission was to determine that neither the Tariff, the Order nor the regulation apply, "[f]acts must exist and be shown by the evidence which afford a basis for measuring the loss of the plaintiff with reasonable certainty." Koenig v. Weber, 174 N.W.2d 218 (S.D. 1970). See also Fredrick v. Dreyer, 257 N.W.2d 835 (S.D. 1977) (reversing with respect to damages on grounds that figures given by Plaintiffs' witnesses as to value of mobile home were too speculative to form foundation for award of damages). Accord Finding of Fact VI, Final Order and Decision in Docket TC97-107 entitled "In the Matter of the Complaint filed by Kathy Rottenbucher, Newell SD, against Stateline Telecommunications, Inc. Regarding Unpublished Address" ("Damages may not be based on speculation but must be proven with

reasonable certainty."). In this case, there is no evidence that affords a basis for measuring the alleged loss with reasonable certainty.

Sheryl and Milton Klein originally sought damages in the amount of $500. At the hearing, however, they submitted Exhibit 11, which states:

> We realize that the standard of proof for such a reward likely requires evidence more specific than that which we are able to provide. And, such a reward would likely also be subject to considerable dispute. While we still believe that such a settlement would be warranted, we also believe that our energies and resources would be better utilized concentrating on our main goal, obtaining reliable phone service.

(emphasis added). It is settled law that a party cannot claim a version of the facts more favorable than his own testimony.[6] Thus, by their own admissions, the Kleins apparently concede their damages would be speculative and also appear to withdraw their request for monetary damages.

In addition, JoAnn Klein only requested in her complaint reimbursement or credit for days when her telephone was out of service. U S WEST has agreed to her request. Indeed, an automatic credit is available to her when she has been out of service for more than twenty-four hours. Complainants Lawrence Klein and Margaret Figert have not made any claim for monetary compensation.

CONCLUSION

Damages in this case are limited under the Tariff, the Order and ARSD 20:10:07:05. Alternatively, even if the Commission was to disregard the damage limitation, Sheryl and Milton Klein's damages are, by their own admission, speculative and have apparently been withdraw Lawrence Klein's request for credit will be satisfied.

---

[6] Guthmiller v. South Dakota Dept. of Transp., 502 N.W.2d 586, 589 (S.D. 1993); State v. Jacobson, 491 N.W.2d 455 (S.D. 1992); Trammell v. Prairie States Ins. Co., 473 N.W.2d 460, 463 (S.D. 1991); Waddell v. Dewey County Bank, 471 N.W.2d 591, 595 n.3 (S.D. 1991); Lalley v. Safway Steel Scaffolds, Inc., 364 N.W.2d 139, 141 (S.D. 1985); Myers v. Lennox Co-op Ass'n, 307 N.W.2d 863 (S.D. 1981); Swee v. Myrl & Roy's Paving, Inc., 283 N.W.2d 570 (S.D. 1979).

DATED this 12th day of February, 1999.

Thomas J. Welk
Tamara A. Wilka
BOYCE, MURPHY, McDOWELL &
GREENFIELD, L.L.P.
101 North Phillips Avenue, Suite 600
P. O. Box 5015
Sioux Falls, SD 57117-5015
(605) 336-2424

Attorneys for U S WEST Communications, Inc.

CERTIFICATE OF SERVICE

I, Thomas J. Welk, do hereby certify that I am a member of the law firm of Boyce, Murphy, McDowell & Greenfield, L.L.P., and on the 12th day of February, 1999, a true and correct copy of U S WEST Communications, Inc.'s Brief was sent via US mail, postage prepaid, to the following addresses:

Sheryl L. Klein
HC 14, Box 37
Valentine, NE 69201

Clifford and JoAnn Klein
HC 14, Box 37A
Valentine, NE 69201

Lawrence Klein
HC 14, box 37B
Valentine, NE 69201

Margaret Figert
P.O. Box 229
Mission, SD 57555

Thomas J. Welk

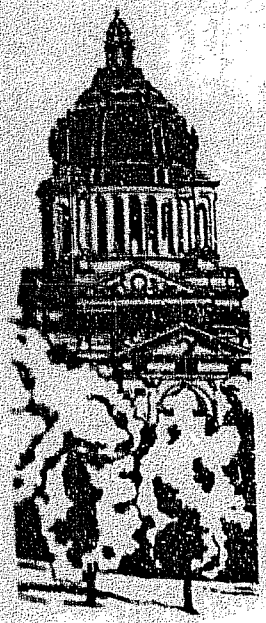

South Dakota Public Utilities Commission

State Capitol Building, 500 East Capitol Avenue, Pierre, South Dakota 57501-5070

February 26, 1999

William Bullard, Jr.
Executive Director
South Dakota Public Utilities Commission
500 East Capitol
Pierre, SD 57501

RE: Complaints of Sheryl L. Klein, Mrs. Clifford Klein, Lawrence Klein and Margaret Figert, Dockets TC98-183, 98-184, 98-199 and 98-212

Dear Mr. Bullard:

Please be advised that Staff will not be filing a brief in these dockets.

Very truly yours,

Camron Hoseck
Staff Attorney

cc: Tom Welk
Sheryl L. Klein
Mrs. Clifford Klein
Lawrence Klein
Margaret Figert
Leni Healy

Capitol Office
Telephone (605)773-3201
FAX (605)773-3809

Transportation/
Warehouse Division
Telephone (605)773-5280
FAX (605)773-3225

Consumer Hotline
1-800-332-1782

TTY Through
Relay South Dakota
1-800-877-1113

Internet

Jim Burg
Chairman
Pam Nelson
Vice-Chairman
Laska Schoenfelder
Commissioner

William Bullard Jr.
Executive Director

Edward R. Anderson
Harlan Best
Martin C. Bettmann
Charlie Bolle
Sue Cichos
Karen E. Cremer
Marlette Fischbach
Shirleen Fugitt
Lewis Hammond
Katie Hartford
Leni Healy
Camron Hoseck
Dave Jacobson
Bob Knadle
Delaine Kolbo
Jeffrey P. Lorensen
Terry Norum
Gregory A. Rislov
Tammi Stangohr
Steven M. Wegman
Rolayne Ailts Wiest

U S WEST
125 South Dakota Avenue
Sioux Falls, SD 57194

RECEIVED
MAR 01 1999
SOUTH DAKOTA PU
UTILITIES COMMISS

February 25, 1999

Mr. William Bullard, Executive Director
Public Utilities Commission
State Capitol Building
Pierre, South Dakota 57501

Dear Mr. Bullard:

At the Commission hearing held in Mission, South Dakota on February 3, 1999, I committed to work with the customers who had billing errors due to 411 calls.

I sent a letter to the customers listed on the attached sheet (a copy of the letter is also attached) asking for a response by February 20, 1999. I received only one reply.

I have attached a listing of the customers who will receive adjustments on their accounts. This list includes the customers who were at the hearing and gave me the information, as well as the one I received in the mail. In addition, I have listed the amount each customer will receive as an adjustment.

I will be sending letters to each customer informing them to watch for this adjustment on their bills.

If you have any questions, please call me on 605-335-4596.

Sincerely,

Colleen Sevold

Colleen E. Sevold
Manager-Regulatory Affairs

USA
Proud Sponsor
36USC380

411 Letter Customers

Name	Address	City	Salutation
William & Kay Abbott	HC 14, Box 43	Valentine, NE 69201	Mr. & Mrs. Abbott
Jan Epke	HC 14, Box 62	Valentine, NE 69201	Ms. Epke
Klein Elementary			
Kathleen Bryan	Box 1118	Mission, SD 57555	Kathleen
Randy & Vicki Klein	HC 14, Box 42	Valentine, NE 69201	Mr. & Mrs. Klein
Carl & Patsy Baker	HC 14, Box 35	Valentine, NE 69201	Mr. & Mrs. Baker
Harold & Evelyn Whiting	HC 14, Box 36	Valentine, NE 69201	Mr. & Mrs. Whiting
Jim Harp for	HC 14, Box 39	Valentine, NE 69201	Jim & Alice
Alice Harp			
June Jansen	HC 14, Box 36A	Valentine, NE 69201	June
Doris Havemann	HC 14, Box 33	Valentine, NE 69201	Doris

U S WEST
125 South Dakota Avenue
Sioux Falls, SD 57194

U S WEST
life's better here ®

125 S. Dakota Ave., 8th Floor
Sioux Falls, South Dakota 57194

February 4, 1999

William & Kay Abbott
HC 14, Box 43
Valentine, NE 69201

copy

Dear Mr. & Mrs. Abbott:

During a hearing that was held on February 3, 1999, it was brought to the attention of U S WEST that many of the customers served on the system in your area have been billed for 411 calls that they did not make.

If you have some of these calls on your bills and you have not been credited for them, please send copies of your bills to the address listed below and we will make the adjustments on your account.

Please have these copies sent to the address below by February 20, 1999. Thank you.

Send to:

Colleen Sevold
125 S. Dakota Ave., 8th Floor
Sioux Falls, SD 57194
Phone: 605-335-4596
Fax: 605-339-5390

Sincerely,

Colleen Sevold
Manager-Regulatory Affairs

CC: Tom Welk

USA
Proud Sponsor
36USC380

LIST OF CUSTOMERS RECEIVING ADJUSTMENTS FOR BILLING ERRORS DUE TO 411 CALLS

Kathleen Bryan 378-3817 $4.40

Randy Klein 378-3468 $4.40

J & R Lamoureaux 378-1120 $47.40

Milton Klein 378-1709
Had received charges of $32.34 and a previous adjustment of $9.50 and $9.39. We owe a balance of $13.45

Clifford Klein 378-3851

Billed $61.11, already received adjustments of 44.95. We owe $16.16

Edward A. Peters, Mgr.-Technical Witnessing
U S WEST - Interconnection Planning
700 W. Mineral, MN 520.16
Littleton, Colorado 80120
303-707-7035

U S WEST COMMUNICATIONS

FAX Received APR 05 1999

RECEIVED
APR 08 1999
SOUTH DAKOTA PUBLIC UTILITIES COMMISSION

April 2, 1999

William Bullard, Jr., Executive Director
Public Utilities Commission
State Capitol Building
Pierre, SD 57501

Re: In the Matter of the Complaint Filed by Sheryl L. Klein, Valentine, Nebraska, against U S WEST Communications, Inc. Regarding Poor Service and a Request to Have Lines Updated (TC 98-183)

Re: In the Matter of the Complaint Filed by Clifford Klein, Valentine, Nebraska, against U S WEST Communications, Inc. Regarding Poor Service and a Request to Have Lines Updated (TC 98-184)

Re: In the Matter of the Complaint Filed by Lawrence Klein, Valentine, Nebraska, against U S WEST Communications, Inc. Regarding Poor Service and a Request to Have Lines Updated (TC 98-199)

Re: In the Matter of the Complaint Filed by Margaret Figert, Valentine, Nebraska, against U S WEST Communications, Inc. Regarding Poor Service and a Request to Have Lines Updated (TC 98-212)

Dear Mr. Bullard:

This letter is to provide you with a status of testing and repair work for the Valentine East Route which serves Mrs. Klein, and other customers in the same general area as the Kleins, as I committed to do at the hearing on this complaint held on February 3, 1999. U S WEST committed 2 employees each work day to the testing of the cable and carrier on this route, and to the making of repairs as needed, during February and early March. The testing and repair work is being done to ensure that all customers on this route receive quality voice services. Since the testing was completed, engineering jobs have been prepared and are now approved to do the necessary cable and drop wire replacements that were identified as being necessary. To date the following work has been completed:

- All sections of cable have been tested (approximately 42 miles) and the test results analyzed.
- The signal levels for all carrier systems have been tested at each repeater and at the remote terminals; all tests were within design parameters. Results will be sent under separate cover.
- All cable closures have been inspected; cables were re-spliced at four closures.
- One customer's network interface was replaced at the customer's home and their drop wire repaired.

The following work still needs to be completed:

- A 6,300' section of buried cable was found to be in the process of becoming defective and will be replaced.
- A 2000' buried distribution cable will be replaced due to damage to it.
- A 1500' section of buried wire was found to be noisy, and will be replaced.
- A 150' section of cable will also be replaced.
- One customer's buried drop will be replaced.
- A final test of all services on this route will be made after the cable and wire replacements are made.

All cables and wire to be replaced are 19 gauge. It is necessary to use 19 gauge cable because of the distance between Ms. Klein and our central office. Because 19 gauge cable must be specially ordered, I am assuming that it is reasonable to assume that it will take about sixty days to receive the cable, place it and splice, assuming no unforeseen circumstances. I would like an additional 30 days to test and analyze the circuits for all customers in this area of the exchange to ensure that the service problems have been corrected. I will communicate with the Commission if any unforeseen circumstances are encountered that requires a modification of these dates. I will provide the Commission with a final status report.

Sincerely yours,

Edward A Peters, Manager
U S WEST Communications

cc:

Sheryl L. Klein	Todd Lundy	Dennis Warner
Clifford Klein	Tom Welk	Myron Wasson
Lawrence Klein	Jon Lehner	Colleen Sevold
Margaret Figert	Carmon Hoseck	



South Dakota
Public Utilities Commission

State Capitol Building, 500 East Capitol Avenue, Pierre, South Dakota 57501-5070

April 9, 1999

Ms. Sheryl L. Klein
HC 14, box 37
Valentine, NE 69201

Ms. JoAnn Klein
HC 14, Box 37A
Valentine, NE 69201

Mr. Lawrence Klein
HC 14, Box 37B
Valentine, NE 69201

Ms. Margaret Figert
P. O. Box 229
Mission, SD 57555

Mr. Thomas J. Welk
Attorney at Law
Boyce, Murphy, McDowell & Greenfield
P. O. Box 5015
Sioux Falls, SD 57117-5015

Ms. Colleen E. Sevold
Manager-Regulatory Affairs
U S WEST Communications, Inc.
125 South Dakota Avenue, 8th Floor
Sioux Falls, SD 57194

Re: Sheryl Klein Complaint - Docket TC98-183
JoAnn Klein Complaint - Docket TC98-184
Lawrence Klein Complaint - Docket TC98-199
Margaret Figert Complaint - Docket TC98-212

Dear Folks:

Enclosed each of you will find a copy of Supplement to Staff Hearing Brief in the above captioned matter. This is intended as service upon you by mail.

Very truly yours,

Camron Hoseck
Staff Attorney

CH:dk
Enc.

Capitol Office
Telephone (605)773-3201
FAX (605)773-3809

Transportation/
Warehouse Division
Telephone (605)773-5280
FAX (605)773-3225

Consumer Hotline
1-800-332-1782

TTY Through
Relay South Dakota
1-800-877-1113

Internet Website
www.puc.state.sd.us/puc/

Jim Burg
Chairman
Pam Nelson
Vice-Chairman
Laska Schoenfelder
Commissioner

William Bullard Jr.
Executive Director

Harlan Best
Martin C. Bettmann
Sue Cichos
Karen E. Cremer
Michele M. Farris
Mariette Fischbach
Shirleen Fugitt
Lewis Hammond
Leni Healy
Camron Hoseck
Lisa Hull
Dave Jacobson
Katie Johnson
Bob Knadle
Delaine Kolbo
Jeffrey P. Lorensen
Charlene Lund
Terry Norum
Gregory A. Rislov
Keith Senger
Rolayne Ailts Wiest

BEFORE THE PUBLIC UTILITIES COMMISSION
OF THE STATE OF SOUTH DAKOTA

IN THE MATTER OF THE COMPLAINT FILED BY SHERYL L. KLEIN, VALENTINE, NEBRASKA, AGAINST U S WEST COMMUNICATIONS, INC. REGARDING POOR SERVICE AND A REQUEST TO HAVE LINES UPDATED	SUPPLEMENT TO STAFF HEARING BRIEF TC98-183
IN THE MATTER OF THE COMPLAINT FILED BY JOANN KLEIN, VALENTINE, NEBRASKA, AGAINST U S WEST COMMUNICATIONS, INC. REGARDING POOR SERVICE AND A REQUEST TO HAVE LINES UPDATED	TC98-184
IN THE MATTER OF THE COMPLAINT FILED BY LAWRENCE KLEIN, VALENTINE, NEBRASKA, AGAINST U S WEST COMMUNICATIONS, INC. REGARDING POOR SERVICE AND A REQUEST TO HAVE LINES UPDATED	TC98-199
IN THE MATTER OF THE COMPLAINT FILED BY MARGARET FIGERT, MISSION, SOUTH DAKOTA, AGAINST U S WEST COMMUNICATIONS, INC. REGARDING POOR SERVICE AND A REQUEST TO HAVE LINES UPDATED	TC98-212

As a supplement to its hearing brief in these dockets, Commission staff submits the following for consideration of the Commission.

Witness Edward A. Peters has filed U S WEST's proactive testing (hearing transcript p.165) results with the Commission. Of significance in his filing is the fact that U S WEST now proposes to take another 90 days to get the job done. Secondly, the report is deficient in that it does not address any testing of switches which witness Peters

indicated needed looking into (hearing transcript, p. 130). The relevance of any testing of switches is to see if the "411" calls are legitimate.

As to this issue of timeliness, the record reflects that these complaints were received on October 8, 1998, November 6, 1998, and the last one, Margaret Figert's, was received on December 11, 1998. Problems on this exchange are documented in January 1998 (see hearing Exhibit 11 received under advisement and transcript 10,11,18). There was a correlation between bad service and weather (Exhibit 11, and transcript 14-15). The bottom line here is that given these problems, and if U S WEST is given an additional 90 days, the patrons on this exchange have had deficient service for a year and one-half.

This is unreasonable on the part of U S WEST. These people pay the same telephone bill month in and month out and what do they get? They get static, interrupted service and pleas for additional time for "proactive" testing, ordering replacement cable and then more testing. The more fundamental question here is whether U S WEST is capable of providing service of any sustainable quality to these people. Why does U S WEST not have the replacement cable in stock? Is this so unusual that this multinational company does not stock or cannot readily procure the cable? It has to take an additional 60 days to get cable?

It is submitted that U S WEST does not take its commitment as a common carrier seriously. Under SDCL 49-2-4 it has a duty to accept and carry messages. U S WEST should be ordered forthwith to deliver service to these people under the authority of SDCL 49-31-7.1(2). To delay this any further is a disservice to these patrons.

Dated this 9th day of April, 1999.

Camron Hoseck
Staff Attorney
South Dakota Public Utilities Commission
500 East Capitol
Pierre, SD 57501
Telephone (605) 773-3201

CERTIFICATE OF SERVICE

I hereby certify that copies of Supplement to Staff Hearing Brief were served on the following by mailing the same to them by United States Post Office First Class Mail, postage thereon prepaid, at the address shown below on this the 9th day of April, 1999.

Ms. Sheryl L. Klein
HC 14, box 37
Valentine, NE 69201

Ms. JoAnn Klein
HC 14, Box 37A
Valentine, NE 69201

Mr. Lawrence Klein
HC 14, Box 37B
Valentine, NE 69201

Ms. Margaret Figert
P. O. Box 229
Mission, SD 57555

Mr. Thomas J. Welk
Attorney at Law
Boyce, Murphy, McDowell & Greenfield
P. O. Box 5015
Sioux Falls, SD 57117-5015

Ms. Colleen E. Sevold
Manager-Regulatory Affairs
U S WEST Communications, Inc.
125 South Dakota Avenue, 8th Floor
Sioux Falls, SD 57194

Camron Hoseck
Staff Attorney

BEFORE THE PUBLIC UTILITIES COMMISSION
OF THE STATE OF SOUTH DAKOTA

IN THE MATTER OF THE COMPLAINT FILED BY MRS. CLIFFORD (JOANN) KLEIN, VALENTINE, NEBRASKA, AGAINST U S WEST COMMUNICATIONS, INC. REGARDING POOR SERVICE AND A REQUEST TO HAVE LINES UPDATED	))))))	ORDER SETTING DEADLINE TC98-184

On October 8, 1998, the Public Utilities Commission (Commission) received a complaint filed by Mrs. Clifford (JoAnn) Klein, Valentine, Nebraska (Complainant), against U S WEST Communications, Inc. (U S WEST) regarding poor service. Complainant outlines a series of service outages, repair difficulties, outdated service, phantom calls, and staffing issues. Complainant also requested adjustment to her U S WEST bill for services not used and long distances calls not made by her.

Pursuant to ARSD 20:10:01:08.01 and 20:10:01:09, if a complaint cannot be settled without formal action, the Commission shall determine if the complaint shows probable cause of an unlawful or unreasonable act, rate, practice or omission to go forward with the complaint.

On November 3, 1998, at a duly noticed meeting, the Commission considered this matter. The Commission voted unanimously to find probable cause. U S WEST filed its answer on November 30, 1998.

The hearing was held on February 3, 1999, beginning at 1:30 o'clock P.M., at Cherry-Todd Electric Cooperative, West Highway 18, Mission, South Dakota. The Commission also heard the complaints filed against U S WEST in dockets TC98-183, TC98-199, and TC98-212, since those complaints concern the same general area as this complaint. At the hearing, U S WEST stated that it would do testing and any necessary repairs and report back to the Commission. U S WEST filed updates on April 2, 1999 and May 7, 1999. In its April 2, 1999, update, U S WEST reported that it needed to replace a portion of the buried cable and stated it would take around 90 days to get the cable, make the replacements, and test the system.

At its May 12, 1999, meeting, the Commission considered how to proceed. The Commission has jurisdiction in this matter pursuant to SDCL Chapters 1-26, 49-2, 49-13, including 49-13-1 through 49-13-14, inclusive, and SDCL Chapter 49-31, including 49-31-3, 49-31-7, 49-31-7.1, 49-31-7.2, 49-31-10, 49-31-11, 49-31-38, 49-31-38.1, 49-31-38.2, 49-31-38.3, 49-31-60 through 49-31-68, inclusive, and ARSD 20:10:01:07.01 through 20:10:01:28, inclusive. After listening to comments from the parties, the Commission unanimously voted to require U S WEST to complete its repairs and testing by June 8, 1999. It is therefore

ORDERED, that U S WEST shall complete its repairs and testing by June 8, 1999.

Dated at Pierre, South Dakota, this 20th day of May, 1999.

CERTIFICATE OF SERVICE

The undersigned hereby certifies that this document has been served today upon all parties of record in this docket, as listed on the docket service list, by facsimile or by first class mail, in properly addressed envelopes, with charges prepaid thereon.

By Melanie Kalbo

Date 5/21/99

(OFFICIAL SEAL)

BY ORDER OF THE COMMISSION:

James A. Burg

JAMES A. BURG, Chairman

Pam Nelson

PAM NELSON, Commissioner

Laska Schoenfelder

LASKA SCHOENFELDER, Commissioner

RECEIVED
JUN 0 8 1999
SOUTH DAKOTA PUBLIC
UTILITIES COMMISSION

BEFORE THE PUBLIC UTILITIES COMMISSION
OF THE STATE OF SOUTH DAKOTA

IN THE MATTER OF THE COMPLAINT FILED BY SHERYL L. KLEIN, VALENTINE, NEBRASKA, AGAINST U S WEST COMMUNICATIONS, INC. REGARDING POOR SERVICE AND A REQUEST TO HAVE LINES UPDATED	TC 98-183
IN THE MATTER OF THE COMPLAINT FILED BY MRS. CLIFFORD (JOANN) KLEIN, VALENTINE, NEBRASKA, AGAINST U S WEST COMMUNICATIONS, INC. REGARDING POOR SERVICE AND A REQUEST TO HAVE LINE UPDATED	TC 98-184
IN THE MATTER OF THE COMPLAINT FILED BY LAWRENCE KLEIN, VALENTINE, NEBRASKA, AGAINST U S WEST COMMUNICATIONS, INC. REGARDING POOR SERVICE AND A REQUEST TO HAVE LINES UPDATED	TC 98-199
IN THE MATTER OF THE COMPLAINT FILED BY MARGARET FIGERT, MISSION, SOUTH DAKOTA, AGAINST U S WEST COMMUNICATIONS, INC. REGARDING POOR SERVICE AND A REQUEST TO HAVE LINES UPDATED	TC 98-212

FAX Received JUN 04 1999

U S WEST COMMUNICATIONS, INC.'s MOTION TO EXTEND DEADLINE

U S WEST Communications, Inc. ("U S WEST") through the undersigned attorneys, moves to modify the Order Setting Deadline dated May 20, 1999 entered in these matters for US WEST to complete its repairs and testing from June 8, 1999 to July 30, 1999. This motion is based upon the affidavit of Edward A. Peters, attached hereto.

DATED this 4th day of June, 1999.

Thomas J. Welk
Tamara A. Wilka
BOYCE, MURPHY, McDOWELL & GREENFIELD, L.L.P.
101 North Phillips Avenue, Suite 600
P. O. Box 5015
Sioux Falls, SD 57117-5015
(605) 336-2424

Attorneys for U S WEST Communications, Inc.

CERTIFICATE OF SERVICE

I, Thomas J. Welk, do hereby certify that I am a member of the law firm of Boyce, Murphy, McDowell & Greenfield, L.L.P., and on the 4th day of June, 1999, a true and correct copy of U S WEST Communications, Inc.'s Motion to Extend Deadline was sent via US mail, postage prepaid, to the following addresses:

Sheryl L. Klein
HC 14, Box 37
Valentine, NE 69201

Clifford and JoAnn Klein
HC 14, Box 37A
Valentine, NE 69201

Lawrence Klein
HC 14, box 37B
Valentine, NE 69201

Margaret Figert
P.O. Box 229
Mission, SD 57555

Camron Hoseck
SD Public Utilities Commission
500 E. Capitol Avenue
Pierre, SD 57501

Thomas J. Welk

RECEIVED
JUN 0 8 1999
SOUTH DAKOTA PU
UTILITIES COMMISS
FAX Received JUN 08

BEFORE THE PUBLIC UTILITIES COMMISSION
OF THE STATE OF SOUTH DAKOTA

IN THE MATTER OF THE COMPLAINT FILED BY SHERYL L. KLEIN, VALENTINE, NEBRASKA, AGAINST U S WEST COMMUNICATIONS, INC. REGARDING POOR SERVICE AND A REQUEST TO HAVE LINES UPDATED	**TC 98-183**
IN THE MATTER OF THE COMPLAINT FILED BY MRS. CLIFFORD (JOANN) KLEIN, VALENTINE, NEBRASKA, AGAINST U S WEST COMMUNICATIONS, INC. REGARDING POOR SERVICE AND A REQUEST TO HAVE LINE UPDATED	**TC 98-184**
IN THE MATTER OF THE COMPLAINT FILED BY LAWRENCE KLEIN, VALENTINE, NEBRASKA, AGAINST U S WEST COMMUNICATIONS, INC. REGARDING POOR SERVICE AND A REQUEST TO HAVE LINES UPDATED	**TC 98-199**
IN THE MATTER OF THE COMPLAINT FILED BY MARGARET FIGERT, MISSION, SOUTH DAKOTA, AGAINST U S WEST COMMUNICATIONS, INC. REGARDING POOR SERVICE AND A REQUEST TO HAVE LINES UPDATED	**TC 98-212**

AFFIDAVIT OF EDWARD A. PETERS IN SUPPORT OF U S WEST COMMUNICATIONS, INC.'s MOTION TO EXTEND DEADLINE

STATE OF UTAH)
:ss
COUNTY OF SALT LAKE)

I, Edward A. Peters, being duly sworn upon oath, depose and state:

1. I am the same Ed Peters that testified at the hearing on this matter for U S WEST Communications, Inc. ("U S WEST") on February 3, 1999. I have read the Order Setting Deadlines dated May 20, 1999 entered by the Commission requiring U S WEST to complete its repairs and testing by June 8, 1999. For the reasons stated hereafter, U S WEST requests that the

deadline for completing all cable repairs and testing of the carrier systems be extended to the 30th day of July, 1999.

2. After the hearing concluded on February 3, 1999, U S WEST undertook a significant effort to test the cable and carrier system on the route that serves the complainants and make repairs as needed during February and early March. On April 2, 1999 I wrote a letter to William Bullard, Executive Director of the Commission, identifying the work that had been done and the work to be completed, a copy of which is attached as Exhibit A. I outlined in my April 2nd letter because of the extenuating circumstances that U S WEST had established a target date of July 2, 1999 for completing replacement of all cable and wire and doing final testing assuming no unforeseen circumstances. I had indicated to the Commission I would file a final status report by July 9, 1999.

3. On May 7, 1999 I wrote another letter to William Bullard, Executive Director of the Commission, which is attached hereto as Exhibit B, answering certain questions that the Commissioners had raised at the hearing on February 3, 1999 and also provided initial carrier results showing that transmitting signals were within acceptable range. I also indicated that we were replacing a 6,300 foot section of cable outlining the difficulty in returning a quality of service when service is located 35 to 40 miles from the central office.

4. On May 12, 1999 the Commission, after reviewing the letters that I previously sent, ordered that U S WEST complete its repairs and testing by June 8, 1999. I explained to the Commission at that time that U S WEST was hoping to have the cable placed by May 31, 1999 but additional time would be needed for testing.

5. Since the May 12, 1999 meeting of the Commission, the following work has been completed by U S WEST some of which began prior to May 12th:

a. Completed the replacement of the 6,300 foot section of cable;

b. Replaced a 300 foot section of cable;

c. Replaced a 5,500 foot section of cable;

d. Replaced a 1,500 foot section of cable;

e. Performed electrical bonding at ten closures; and

f. Replaced six closures and replaced the cable loops.

6. On May 27, 1999, I performed an inspection of the cable plant on this route, and performed cable and carrier testing. As a result of that inspection and the associated tests, I have determined that additional work is required; U S WEST will not have all repairs and testing completed by June 8, 1999. The additional work required is to replace older closures and the cable loops within them that may generate noise or other problems on the carrier systems serving customers in this area of the Valentine Exchange as a result of the normal aging process of the cable. Although I am fairly sure that most closures are not causing trouble, at least some of them are and replacing them at this time will avoid future problems. There are approximately 40 closures and loops that need to be replaced along a thirty-five mile section of this route. After this work has been completed, testing will have to be done to assure the quality of service for the subscribers on the line. I anticipate that the following work will need to be done with the following deadlines:

a. Replace a 4,000 foot section of cable by June 25, 1999;

b. Replace the drop serving Margaret Figert by June 25, 1999;

c. Replace the drop serving the Abott's field trailer (hired hand's home) by June 25, 1999;

d. Replace 50 closures and loops; and

e. Do routine maintenance on an additional 20 closures.

7. Since the February 3, 1999 hearing U S WEST has done the following work on the line serving the subscribers: (detail work)

a. Provided a total of 320 hours of testing and isolating trouble for repair and/or cable replacement (intermixed with repair activities);

b. Replaces 14 closures and loops;

c. Found five cable faults, dug up cable and made repairs; and

d. Engineered cable replacements, ordered cable and associated materials and hired contractor to do the work.

8. The work that has been done by U S WEST since the hearing has an approximate value of the following:

a. U S WEST labor of $30,000;

b. Material and Contract Labor of $20,000.

9. U S WEST asked the Commission to take judicial notice of the Complaint of Randy Kieffer, TC 98-176, at the hearing that occurred on June 2, 1999. The route that was at issue in the Kieffer matter is approximately 26 miles from the central office. The work that U S WEST expended on the Kieffer matter took approximately 103 work days to be completed as permitted by the Commission. The route in this matter exceeds the Kieffer route by 18 miles (27 versus 45 miles or a 67% increase in distance) and there are four complainants and numerous other participating customers in this matter where Randy Kieffer was substantially the only complainant. The distance from the central office to the subscribers on this line is one of the longest, if not the longest, loop in South Dakota. In this case, the Commission has allowed U S WEST only 88 work days measured from the date of the hearing when this route is longer and more complex than the Kieffer route and there are many more services to verify.

10. U S WEST has shown in the Kieffer matter that it has kept its commitment to provide the repairs and testing. It is impossible, based upon the current testing that has been done and the work that needs to be done, that all repairs and testing will be completed by June 8, 1999. I would respectfully request that an extension be granted to July 30, 1999 for the completion of all cable work and testing of all carrier systems on this route. I will also provide a report to the Commission and the complainants regarding the progress of the work on Friday of each week beginning June 18, 1999 until the completion date.

11. To date, all of the trouble U S WEST has found has been cable related, there are no known carrier problems. Recently the U S WEST technicians found another high resistant open on the carrier pair serving Milton and Sheryl Klein. That problem has been repaired and the noise detected on the services on this carrier have been cleared. It is my belief that as we continue to do the recommended cable repairs and/or cable replacements service in this area will improve.

DATED this 4th day of June, 1999.

Edward A. Peters

Sworn to before me this ____ day of June, 1999.

Notary Public
My Commission Expires:

JUN 4 '99 14:33 1 605 334 0618 PAGE.006
** TOTAL PAGE.002 **

NEXT

DOCUMENT (S)

BEST IMAGE

POSSIBLE

Edward A. Peters, Mgr.-Technical Witnessing
U S WEST Interconnection Planning
700 W. Mineral, MN F20.16
Littleton, Colorado 80120
303-707-7035

U S WEST Communications, Inc.

April 2, 1999

William Bullard, Jr.
Executive Director
Public Utilities Commission
State Capitol Avenue
Pierre, SD 57501

Re: In the Matter of the Complaint Filed by Sheryl L. Klein, Valentine, Nebraska, against U S WEST Communications, Inc. Regarding Poor Service and a Request to Have Lines Updated (TC 98-183)

Dear Mr. Bullard:

This letter is to provide you with a status of testing and repair work for the Valentine East Route which serves Mrs. Klein, and other customers in the same general area as the Kleins, as I committed to do at the hearing on this complaint held on February 3, 1999. U S WEST committed 2 employees each work day to the testing of the cable and carrier on this route, and to the making of repairs as needed, during February and early March. The testing and repair work is being done to ensure that all customers on this route receive quality voice services. Since the testing was completed, engineering jobs have been prepared and are now approve to do the necessary cable and drop wire replacements that were identified as being necessary. To date the following work has been completed:

- All sections of cable have been tested (approximately 42 miles) and the test results analyzed.
- The signal levels for all carrier systems have been tested at each repeater and at the remote terminals; all tests were within design parameters.
- All cable closures have been inspected; cables were re-spliced at four closures.
- One customer's network interface was replaced at the customer's home and their drop wire repaired.

The following work still needs to be completed:

EXHIBIT
A

- A 6,300' section of buried cable was found to be in the process of becoming defective and will be replaced.
- A 2000' buried distribution cable will be replaced due to damage to it.
- A 1500' section of buried wire was found to be noisy, and will be replaced.
- A 150' section of cable will also be replaced.
- One customer's buried drop will be replaced.
- A final test of all services on this route will be made after the cable and wire replacements are made.

All cables and wire to be replaced is 19 gauge. Since 19 gauge cable must be especially ordered, U S WEST has established a target date of July 2, 1999 for completing the replacement of all cable and wire and doing final testing, assuming no unforeseen circumstances. We will communicate with the Commission if any unforeseen circumstances are encountered that requires a modification of these dates. I will provide the Commission with a final status report by July 9, 1999.

Sincerely yours,

Edward A Peters, Manager
U S WEST Communications

cc: Carmon Hoseck
Cheryl Klein
Colleen Sevold
Todd Lundy
Tom Welk
John Lehner
Dennis Warner
Myron Wasson

Edward A. Peters, Mgr.-Technical Witnessing
U S WEST Interconnection Planning
700 W. Mineral, MN F20.16
Littleton, Colorado 80120
303-707-7035

U S WEST Communications, Inc.

May 7, 1999

FAXED TO 605-773-3809 on May 7, 1999

Mailed Overnight Delivery on May 7, 1999

William Bullard, Jr.
Executive Director
Public Utilities Commission
State Capitol Avenue
Pierre, SD 57501

Re: In the Matter of the Complaints Filed by Shery L. Klein (TC98-183), Joann Klein (TC98-184), and Lawrence Klein (TC98-199), Valentine, Nebraska, and Margaret Figert (TC98-212), Mission South Dakota, against U S WEST Communications, Inc. Regarding Poor Service and a Request to Have Lines Updated

Dear Mr. Bullard:

This letter answers questions that the Commission asked of me at the February 3, 1999 hearing in this matter. At that time I committed to investigate those issues raised by the Commissioners and provide clarification.

The Commissioners asked me to provide them with a list of CLASS services that are available to the customers served by the Valentine switch. The following CLASS features are available at the Valentine Ericsson switch: Caller ID, Caller ID Blocking, Continuous Redial, Call Rejection, Priority Call, Selective Call Forwarding, Last Call Return, and Call Trace. All of these services are available to customers receiving their telephone service via analog carrier except Caller ID and Caller ID Blocking.

I was also asked to identify under what circumstances the U S WEST technicians might have to disconnect an entire carrier system while making repairs. The answer to this question is complex and depends on the nature of the trouble. U S WEST technicians attempt to first isolate the problem to a single user's circuit. If the problem is on the customer's circuit, and that service uses a single service card (i.e., channel card or repeater card), then the rest of the carrier may be unaffected. If the trouble is on the carrier pair or a common card shared by other subscribers, then the repair will likely affect all subscribers on that carrier system. Most of the time this would be a relatively short period of time. If the source of the trouble is not readily apparent it becomes necessary to isolate the cable plant by opening the circuit at the repeaters so cable sections can be tested to identify where the trouble is located. The repeaters are usually four to five miles apart and sometimes this type of testing requires the technician to drive to the next repeater and test back towards the open end of the circuit. This can result in the circuit being left

EXHIBIT
B

open for a period of time consistent with the amount of time it takes to drive the distance between test points and back. This is a necessary part of testing circuits on loops serving customers who live a great distance from the central office. Of course, subscribers would not know that their phone line has been affected by testing unless they attempted to use their phone during the testing period.

Because service repair is complex and the work that is necessary differs from repair to repair, I cannot say how often non-complaining subscribers are affected by repairs. Many potential service interruptions to carrier subscribers are only momentary since many tests can be performed quickly and the carrier system restored to service. Other tests can last for a longer period of time while the technicians isolates the source of the problem. Trouble is more difficult to find and fix in extremely long loops, such as those in the Valentine Exchange. Although it is necessary from time to time to take a carrier system "down" to isolate the source of trouble, our technicians only do this when it is absolutely necessary.

Another item I was asked to investigate was if there is a switch problem that could cause subscribers to be billed for 411 calls. We have not discovered a switch problem that would cause these problems. It is possible that stray power on the carrier pairs, or current induced into the carrier circuit from lightening strikes may mimic the three digits "4-1-1". We can block 411 calls from being made on a per number basis so these kinds of calls do not appear on the customer's bill, but this "fix" would also prohibit subscribers from making legitimate 411 calls for directory assistance. After all repairs are made and quality service is restored to the affected customers in the "Klein Corner" area, we will review this issue and determine whether the cable replacements have also corrected this problem. If they have not, we will do additional work to resolve this issue.

Enclosed as Exhibit #1 is the initial carrier test results I committed to provide for this route in my April 2, 1999 letter. Initial tests were made at the last customer's location on the transmit signals for each carrier system. The test results show that all transmit signals were within the acceptable range.

Finally, I would like to address the questions and comments made by Mr. Hoseck in his "Supplement to Staff Hearing Brief" dated April 9, 1999. Mr. Hoseck states "U S WEST now proposes to take another 90 days to get the job done." I informed the Commission during the Klein hearing that U S WEST had already begun testing the cable serving both the Kleins and Ms. Figert, and I suggested that once testing was completed, if defects were found, that U S WEST would need additional time to correct the defects. I believe the 90 days I suggested in this case is consistent with what I requested of the commission in the Spear and Kieffer complaints which the Commission approved. I also believed when I made this request that it was a reasonable amount of time to do the necessary work. Nevertheless, we have continue to expedite this work and we are attempting to complete this work ahead of schedule. Mr. Hoseck also raises a question about the stocking, by U S WEST, of cable. This would require U S WEST to stock every possible size and gauge of cable that could be needed any where in the fourteen state region U S WEST serves (since changes in operations are regional in effect), and then to stock it in a length that would meet any possible requirement. This would be an extremely expensive and unreasonable undertaking for U S WEST. Rather than do this, U S WEST has established business relationships with different cable suppliers that requires them to stock commonly used size and gauge cables. Unfortunately, 19 gauge cable is not a commonly used type of cable, and therefore is not stocked.

It is U S WEST's desire to work with the Commission to further the best interest of the citizens of South Dakota. We are attempting to demonstrate our commitment by locating any and all sources of problems that could be causing the various Klein families, Ms. Figert, and

surrounding neighbors, phone service problems. Potential problems with the 6,300 foot section of cable that we are replacing was extremely difficult to identify. In fact, if not for the fact that we tested this cable on two different days, and in two different ways, we would not have picked up the fact that this section of cable was damp and is beginning to create trouble for individual services. The reason we tested this cable twice was because the carrier tests indicated that the service problems were not carrier related and experience has taught us that sometimes there is difficulty in identifying certain types of cable trouble. Given these facts, we tested this route a second time under different weather and environmental conditions, which allowed us to identify the early stages of cable problems.

We are replacing this 6,300' section of cable now, rather than trying to continue to maintain it, because it is our desire to provide quality voice grade phone service to the customers in this area. The fact remains, it is extremely difficult to ensure quality service 100% of the time when the service is located 35 to 40 miles from our central office, as it is in this case. And as hard as we try, there are times when the combined physical characteristics of a 40 miles pair of wires results in creating service problems that are disguised or hidden.

It is my recommendation that the Commission give U S WEST the opportunity to improve service for these customers by allowing us to complete the plan we have proposed to the Commission.

Sincerely yours,

Edward A Peters, Manager
U S WEST Communications

cc: Carmon Hoseck
John Lehner
Colleen Sevold
Sheryl Klein
Todd Lund
Tom Welk
Joann Klein
Lawrence Klein
Dennis Warner
Myron Wasson
Margaret Figert

Revised

RECEIVED
JUN 0 8 1999
SOUTH DAKOTA PUBLIC
UTILITIES COMMISSION

BEFORE THE PUBLIC UTILITIES COMMISSION
OF THE STATE OF SOUTH DAKOTA

IN THE MATTER OF THE COMPLAINT FILED BY SHERYL L. KLEIN, VALENTINE, NEBRASKA, AGAINST U S WEST COMMUNICATIONS, INC. REGARDING POOR SERVICE AND A REQUEST TO HAVE LINES UPDATED	TC 98-183
IN THE MATTER OF THE COMPLAINT FILED BY MRS. CLIFFORD (JOANN) KLEIN, VALENTINE, NEBRASKA, AGAINST U S WEST COMMUNICATIONS, INC. REGARDING POOR SERVICE AND A REQUEST TO HAVE LINE UPDATED	TC 98-184
IN THE MATTER OF THE COMPLAINT FILED BY LAWRENCE KLEIN, VALENTINE, NEBRASKA, AGAINST U S WEST COMMUNICATIONS, INC. REGARDING POOR SERVICE AND A REQUEST TO HAVE LINES UPDATED	TC 98-199
IN THE MATTER OF THE COMPLAINT FILED BY MARGARET FIGERT, MISSION, SOUTH DAKOTA, AGAINST U S WEST COMMUNICATIONS, INC. REGARDING POOR SERVICE AND A REQUEST TO HAVE LINES UPDATED	TC 98-212

AFFIDAVIT OF EDWARD A. PETERS IN SUPPORT OF U S WEST COMMUNICATIONS, INC.'s MOTION TO EXTEND DEADLINE

STATE OF SOUTH DAKOTA)
:ss
COUNTY OF HUGHES)

I, Edward A. Peters, being duly sworn upon oath, depose and state:

1. I am the same Ed Peters that testified at the hearing on this matter for U S WEST Communications, Inc. ("U S WEST") on February 3, 1999. I have read the Order Setting Deadlines dated May 20, 1999 entered by the Commission requiring U S WEST to complete its repairs and testing by June 8, 1999. For the reasons stated hereafter, U S WEST requests that the

deadline for completing all cable repairs and testing of the carrier systems be extended to the 30th day of July, 1999.

2. After the hearing concluded on February 3, 1999, U S WEST undertook a significant effort to test the cable and carrier system on the route that serves the complainants and make repairs as needed during February and early March. On April 2, 1999 I wrote a letter to William Bullard, Executive Director of the Commission, identifying the work that had been done and the work to be completed, a copy of which is attached as Exhibit A. I outlined in my April 2nd letter because of the extenuating circumstances that U S WEST had established a target date of July 2, 1999 for completing replacement of all cable and wire and doing final testing assuming no unforeseen circumstances. I had indicated to the Commission I would file a final status report by July 9, 1999.

3. On May 7, 1999 I wrote another letter to William Bullard, Executive Director of the Commission, which is attached hereto as Exhibit B, answering certain questions that the Commissioners had raised at the hearing on February 3, 1999 and also provided initial carrier results showing that transmitting signals were within acceptable range. I also indicated that we were replacing a 6,300 foot section of cable outlining the difficulty in returning a quality of service when service is located 35 to 40 miles from the central office.

4. On May 12, 1999 the Commission, after reviewing the letters that I previously sent, ordered that U S WEST complete its repairs and testing by June 8, 1999. I explained to the Commission at that time that U S WEST was hoping to have the cable placed by May 31, 1999 but additional time would be needed for testing.

5. Since the May 12, 1999 meeting of the Commission, the following work has been completed by U S WEST some of which began prior to May 12th:

a. Completed the replacement of the 6,300 foot section of cable;

b. Replaced a 300 foot section of cable;

c. Replaced a 5,500 foot section of cable;

d. Replaced a 1,500 foot section of cable;

e. Performed electrical bonding at ten closures; and

f. Replaced six closures and replaced the cable loops.

6. On May 27, 1999, I performed an inspection of the cable plant on this route, and performed cable and carrier testing. As a result of that inspection and the associated tests, I have determined that additional work is required; U S WEST will not have all repairs and testing completed by June 8, 1999. The additional work required is to replace older closures and the cable loops within them that may generate noise or other problems on the carrier systems serving customers in this area of the Valentine Exchange as a result of the normal aging process of the cable. Although I am fairly sure that most closures are not causing trouble, at least some of them are and replacing them at this time will avoid future problems. There are approximately 40 closures and loops that need to be replaced along a thirty-five mile section of this route. After this work has been completed, testing will have to be done to assure the quality of service for the subscribers on the line. I anticipate that the following work will need to be done with the following deadlines:

a. Replace a 4,000 foot section of cable by June 25, 1999;

b. Replace the drop serving Margaret Figert by June 25, 1999;

c. Replace the drop serving the Abott's field trailer (hired hand's home) by June 25, 1999;

d. Replace ~~50~~ 40 EAF closures and loops; and

e. Do routine maintenance on an additional 20 closures.

7. Since the February 3, 1999 hearing U S WEST has done the following work on the line serving the subscribers: (detail work)

a. Provided a total of 320 hours of testing and isolating trouble for repair and/or cable replacement (intermixed with repair activities);

b. Replaces 14 closures and loops;

c. Found five cable faults, dug up cable and made repairs; and

d. Engineered cable replacements, ordered cable and associated materials and hired contractor to do the work.

8. The work that has been done by U S WEST since the hearing has an approximate value of the following:

a. U S WEST labor of $30,000;

b. Material and Contract Labor of ~~$20,000~~ $37,585. EAP

9. U S WEST asked the Commission to take judicial notice of the Complaint of Randy Kieffer, TC 98-176, at the hearing that occurred on June 2, 1999. The route that was at issue in the Kieffer matter is approximately 26 miles from the central office. The work that U S WEST expended on the Kieffer matter took approximately 103 work days to be completed as permitted by the Commission. The route in this matter exceeds the Kieffer route by 18 miles (27 versus 45 miles or a 67% increase in distance) and there are four complainants and numerous other participating customers in this matter where Randy Kieffer was substantially the only complainant. The distance from the central office to the subscribers on this line is one of the longest, if not the longest, loop in South Dakota. In this case, the Commission has allowed U S WEST only 88 work days measured from the date of the hearing when this route is longer and more complex than the Kieffer route and there are many more services to verify.

10. U S WEST has shown in the Kieffer matter that it has kept its commitment to provide the repairs and testing. It is impossible, based upon the current testing that has been done and the work that needs to be done, that all repairs and testing will be completed by June 8, 1999. I would respectfully request that an extension be granted to July 30, 1999 for the completion of all cable work and testing of all carrier systems on this route. I will also provide a report to the Commission and the complainants regarding the progress of the work on Friday of each week beginning June 18, 1999 until the completion date.

11. To date, all of the trouble U S WEST has found has been cable related, there are no known carrier problems. Recently the U S WEST technicians found another high resistant open on the carrier pair serving Milton and Sheryl Klein. That problem has been repaired and the noise detected on the services on this carrier have been cleared. It is my belief that as we continue to do the recommended cable repairs and/or cable replacements service in this area will improve.

DATED this 8th day of June, 1999.

Edward A. Peters

Edward A. Peters

Sworn to before me this 8th day of June, 1999.

Notary Public
My Commission Expires: 3/6/02

NEXT

DOCUMENT (S)

BEST IMAGE

POSSIBLE

Edward A. Powers, Mgr -Technical Witnessing
U S WEST Interconnection Planning
700 W. Mineral, MN F20.16
Littleton, Colorado 80120
303-707-9213

U S WEST Communications, Inc.

April 2, 1999

William Bullard, Jr.
Executive Director
Public Utilities Commission
State Capitol Avenue
Pierre, SD 57501

Re: In the Matter of the Complaint Filed by Sheryl L. Klein, Valentine, Nebraska, against U S WEST Communications, Inc. Regarding Poor Service and a Request to Have Lines Updated (TC 98-183)

Dear Mr. Bullard:

This letter is to provide you with a status of testing and repair work for the Valentine East Route which serves Mrs. Klein, and other customers in the same general area as the Kleins, as I committed to do at the hearing on this complaint held on February 3, 1999. U S WEST committed 2 employees each work day to the testing of the cable and carrier on this route, and to the making of repairs as needed, during February and early March. The testing and repair work is being done to ensure that all customers on this route receive quality voice services. Since the testing was completed, engineering jobs have been prepared and are now approve to do the necessary cable and drop wire replacements that were identified as being necessary. To date the following work has been completed:

- All sections of cable have been tested (approximately 42 miles) and the test results analyzed.
- The signal levels for all carrier systems have been tested at each repeater and at the remote terminals; all tests were within design parameters.
- All cable closures have been inspected, cables were re-spliced at four closures.
- One customer's network interface was replaced at the customer's home and their drop wire repaired.

The following work still needs to be completed:

EXHIBIT
A

- A 6,300' section of buried cable was found to be in the process of becoming defective and will be replaced.
- A 2000' buried distribution cable will be replaced due to damage to it.
- A 1500' section of buried wire was found to be noisy, and will be replaced.
- A 150' section of cable will also be replaced.
- One customer's buried drop will be replaced.
- A final test of all services on this route will be made after the cable and wire replacements are made.

All cables and wire to be replaced is 19 gauge. Since 19 gauge cable must be especially ordered, U S WEST has established a target date of July 2, 1999 for completing the replacement of all cable and wire and doing final testing, assuming no unforeseen circumstances. We will communicate with the Commission if any unforeseen circumstances are encountered that requires a modification of these dates. I will provide the Commission with a final status report by July 9, 1999.

Sincerely yours,

Edward A Peters, Manager
U S WEST Communications

cc: Carmon Hoseck
Cheryl Klein
Colleen Sevold
Todd Lundy
Tom Welk
John Lehner
Dennis Warner
Myron Wasson

Edward A. Peters, Mgr.-Technical Witnessing
U S WEST Interconnection Planning
700 W. Mineral, MN P20.16
Littleton, Colorado 80120
303-707-7035

U S WEST Communications, Inc.

May 7, 1999

FAXED TO 605-773-3809 on May 7, 1999

Mailed Overnight Delivery on May 7, 1999

William Bullard, Jr.
Executive Director
Public Utilities Commission
State Capitol Avenue
Pierre, SD 57501

Re: In the Matter of the Complaints Filed by Shery L. Klein (TC98-183), Joann Klein (TC98-184), and Lawrence Klein (TC98-199), Valentine, Nebraska, and Margaret Figert (TC98-212), Mission South Dakota, against U S WEST Communications, Inc. Regarding Poor Service and a Request to Have Lines Updated

Dear Mr. Bullard:

This letter answers questions that the Commission asked of me at the February 3, 1999 hearing in this matter. At that time I committed to investigate those issues raised by the Commissioners and provide clarification.

The Commissioners asked me to provide them with a list of CLASS services that are available to the customers served by the Valentine switch. The following CLASS features are available at the Valentine Ericsson switch: Caller ID, Caller ID Blocking, Continuous Redial, Call Rejection, Priority Call, Selective Call Forwarding, Last Call Return, and Call Trace. All of these services are available to customers receiving their telephone service via analog carrier except Caller ID and Caller ID Blocking.

I was also asked to identify under what circumstances the U S WEST technicians might have to disconnect an entire carrier system while making repairs. The answer to this question is complex and depends on the nature of the trouble. U S WEST technicians attempt to first isolate the problem to a single user's circuit. If the problem is on the customer's circuit, and that service uses a single service card (i.e., channel card or repeater card), then the rest of the carrier may be unaffected. If the trouble is on the carrier pair or a common card shared by other subscribers, then the repair will likely affect all subscribers on that carrier system. Most of the time this would be a relatively short period of time. If the source of the trouble is not readily apparent it becomes necessary to isolate the cable plant by opening the circuit at the repeaters so cable sections can be tested to identify where the trouble is located. The repeaters are usually four to five miles apart and sometimes this type of testing requires the technician to drive to the next repeater and test back towards the open end of the circuit. This can result in the circuit being left

EXHIBIT
B

open for a period of time consistent with the amount of time it takes to drive the distance between test points and back. This is a necessary part of testing circuits on loops serving customers who live a great distance from the central office. Of course, subscribers would not know that their phone line has been affected by testing unless they attempted to use their phone during the testing period.

Because service repair is complex and the work that is necessary differs from repair to repair, I cannot say how often non-complaining subscribers are affected by repairs. Many potential service interruptions to carrier subscribers are only momentary since many tests can be performed quickly and the carrier system restored to service. Other tests can last for a longer period of time while the technicians isolates the source of the problem. Trouble is more difficult to find and fix in extremely long loops, such as those in the Valentine Exchange. Although it is necessary from time to time to take a carrier system "down" to isolate the source of trouble, our technicians only do this when it is absolutely necessary.

Another item I was asked to investigate was if there is a switch problem that could cause subscribers to be billed for 411 calls. We have not discovered a switch problem that would cause these problems. It is possible that stray power on the carrier pairs, or current induced into the carrier circuit from lightening strikes may mimic the three digits "4-1-1". We can block 411 calls from being made on a per number basis so these kinds of calls do not appear on the customer's bill, but this "fix" would also prohibit subscribers from making legitimate 411 calls for directory assistance. After all repairs are made and quality service is restored to the affected customers in the "Klein Corner" area, we will review this issue and determine whether the cable replacements have also corrected this problem. If they have not, we will do additional work to resolve this issue.

Enclosed as Exhibit #1 is the initial carrier test results I committed to provide for this route in my April 2, 1999 letter. Initial tests were made at the last customer's location on the transmit signals for each carrier system. The test results show that all transmit signals were within the acceptable range.

Finally, I would like to address the questions and comments made by Mr. Hoseck in his "Supplement to Staff Hearing Brief" dated April 9, 1999. Mr. Hoseck states "U S WEST now proposes to take another 90 days to get the job done." I informed the Commission during the Klein hearing that U S WEST had already begun testing the cable serving both the Kleins and Ms. Figert, and I suggested that once testing was completed, if defects were found, that U S WEST would need additional time to correct the defects. I believe the 90 days I suggested in this case is consistent with what I requested of the commission in the Spear and Kieffer complaints which the Commission approved. I also believed when I made this request that it was a reasonable amount of time to do the necessary work. Nevertheless, we have continue to expedite this work and we are attempting to complete this work ahead of schedule. Mr. Hoseck also raises a question about the stocking, by U S WEST, of cable. This would require U S WEST to stock every possible size and gauge of cable that could be needed any where in the fourteen state region U S WEST serves (since changes in operations are regional in effect), and then to stock it in a length that would meet any possible requirement. This would be an extremely expensive and unreasonable undertaking for U S WEST. Rather than do this, U S WEST has established business relationships with different cable suppliers that requires them to stock commonly used size and gauge cables. Unfortunately, 19 gauge cable is not a commonly used type of cable, and therefore is not stocked.

It is U S WEST's desire to work with the Commission to further the best interest of the citizens of South Dakota. We are attempting to demonstrate our commitment by locating any and all sources of problems that could be causing the various Klein families, Ms. Figert, and

surrounding neighbors, phone service problems. Potential problems with the 6,300 foot section of cable that we are replacing was extremely difficult to identify. In fact, if not for the fact that we tested this cable on two different days, and in two different ways, we would not have picked up the fact that this section of cable was damp and is beginning to create trouble for individual services. The reason we tested this cable twice was because the carrier tests indicated that the service problems were not carrier related and experience has taught us that sometimes there is difficulty in identifying certain types of cable trouble. Given these facts, we tested this route a second time under different weather and environmental conditions, which allowed us to identify the early stages of cable problems.

We are replacing this 6,300' section of cable now, rather than trying to continue to maintain it, because it is our desire to provide quality voice grade phone service to the customers in this area. The fact remains, it is extremely difficult to ensure quality service 100% of the time when the service is located 35 to 40 miles from our central office, as it is in this case. And as hard as we try, there are times when the combined physical characteristics of a 40 miles pair of wires results in creating service problems that are disguised or hidden.

It is my recommendation that the Commission give U S WEST the opportunity to improve service for these customers by allowing us to complete the plan we have proposed to the Commission.

Sincerely yours,

Edward A Peters, Manager
U S WEST Communications

cc: Carmon Hoseck
John Lehner
Colleen Sevold
Sheryl Klein
Todd Lundy
Tom Welk
Joann Klein
Lawrence Klein
Dennis Warner
Myron Wasson
Margaret Figert

BEFORE THE PUBLIC UTILITIES COMMISSION OF THE STATE OF SOUTH DAKOTA

IN THE MATTER OF THE COMPLAINT FILED BY MRS. CLIFFORD (JOANN) KLEIN, VALENTINE, NEBRASKA, AGAINST U S WEST COMMUNICATIONS, INC. REGARDING POOR SERVICE AND A REQUEST TO HAVE LINES UPDATED	ORDER GRANTING EXTENSION OF DEADLINE TC98-184

On October 8, 1998, the Public Utilities Commission (Commission) received a complaint filed by Mrs. Clifford (JoAnn) Klein, Valentine, Nebraska (Complainant), against U S WEST Communications, Inc. (U S WEST) regarding poor service. Complainant outlines a series of service outages, repair difficulties, outdated service, phantom calls, and staffing issues. Complainant also requested adjustment to her U S WEST bill for services not used and long distances calls not made by her.

Pursuant to ARSD 20:10:01:08.01 and 20:10:01:09, if a complaint cannot be settled without formal action, the Commission shall determine if the complaint shows probable cause of an unlawful or unreasonable act, rate, practice or omission to go forward with the complaint.

On November 3, 1998, at a duly noticed meeting, the Commission considered this matter. The Commission voted unanimously to find probable cause. U S WEST filed its answer on November 30, 1998.

The hearing was held on February 3, 1999, beginning at 1:30 o'clock P.M., at Cherry-Todd Electric Cooperative, West Highway 18, Mission, South Dakota. The Commission also heard the complaints filed against U S WEST in dockets TC98-183, TC98-199, and TC98-212, since those complaints concern the same general area as this complaint. At the hearing, U S WEST stated that it would do testing and any necessary repairs and report back to the Commission. U S WEST filed updates on April 2, 1999 and May 7, 1999. In its April 2, 1999, update, U S WEST reported that it needed to replace a portion of the buried cable and stated it would take around 90 days to get the cable, make the replacements, and test the system.

At its May 12, 1999, meeting, the Commission unanimously voted to require U S WEST to complete its repairs and testing by June 8, 1999. On June 4, 1999, the Commission received a Motion to Extend Deadline from U S WEST. U S WEST requested that an extension be granted until July 30, 1999, for the completion of all cable work and testing of all carrier systems on the route. At its June 8, 1999, meeting, the Commission considered how to proceed. The Commission has jurisdiction in this matter pursuant to SDCL Chapters 1-26, 49-2, 49-13, including 49-13-1 through 49-13-14, inclusive, and SDCL Chapter 49-31, including 49-31-3, 49-31-7, 49-31-7.1, 49-31-7.2, 49-31-10, 49-31-11, 49-31-38, 49-31-38.1, 49-31-38.2, 49-31-38.3, 49-31-60 through 49-31-68, inclusive,

and ARSD 20:10:01:07.01 through 20:10:01:28, inclusive. After listening to comments from the parties, the Commission voted to grant the extension until July 30, 1999. The Commission further voted that if U S WEST fails to meet the July 30, 1999, deadline, the Commission shall issue a show cause order as to why U S WEST should not be fined $1000 00 per day for each day the work remains uncompleted after July 30, 1999. The Commission also voted to hold another hearing after July 30, 1999, to take additional testimony as to the Complainant's quality of service. It is therefore

ORDERED, that U S WEST's Motion to Extend Deadline until July 30, 1999, is granted; and it is

FURTHER ORDERED, that if U S WEST fails to meet the July 30, 1999, deadline, the Commission shall issue a show cause order as to why U S WEST should not be fined $1000 00 per day for each day the work remains uncompleted after July 30, 1999; and it is

FURTHER ORDERED, that another hearing shall be held after July 30, 1999, to take additional testimony as to the Complainant's quality of service.

Dated at Pierre, South Dakota, this 15th day of June, 1999.

CERTIFICATE OF SERVICE

The undersigned hereby certifies that this document has been served today upon all parties of record in this docket, as listed on the docket service list, by facsimile or by first class mail, in properly addressed envelopes, with charges prepaid thereon.

By Delaine Kolbo

Date 6/15/99

(OFFICIAL SEAL)

BY ORDER OF THE COMMISSION:

PAM NELSON, Commissioner

LASKA SCHOENFELDER, Commissioner

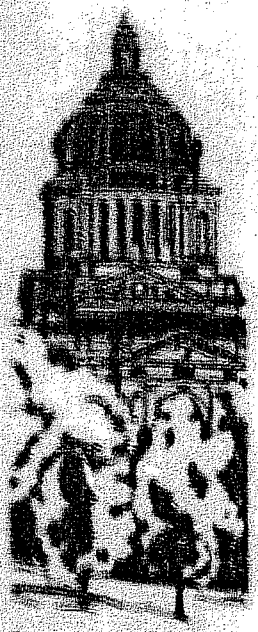

South Dakota Public Utilities Commission

State Capitol Building, 500 East Capitol Avenue, Pierre, South Dakota 57501-5070

July 19, 1999

Ms. Sheryl L. Klein
HC 14, box 37
Valentine, NE 69201

Ms. JoAnn Klein
HC 14, Box 37A
Valentine, NE 69201

Mr. Lawrence Klein
HC 14, Box 37B
Valentine, NE 69201

Ms. Margaret Figert
P. O. Box 229
Mission, SD 57555

Re: Sheryl Klein Complaint - Docket TC98-183
JoAnn Klein Complaint - Docket TC98-184
Lawrence Klein Complaint - Docket TC98-199
Margaret Figert Complaint - Docket TC98-212

Dear Folks:

Enclosed for your information each of you will find a copy of e-mails we recently received from U S WEST with reference to the above captioned matters.

Very truly yours,

Camron Hoseck
Staff Attorney

CH:dk
Enc.

Hoseck, Camron

From: Colleen Sevold
To: camronh
Subject: [Fwd: Klein status report for July 9, 1999]
Date: Tuesday, July 13, 1999 2:36PM

This is the latest report that was sent to Bill Bullard regarding the Klein.
---------- Forwarded by Colleen Sevold/PublicPolicy/USWEST/US on 07/13/99 02:20 PM ----------

First_name Last_name <your_cuid@uswest.com> on 07/13/99 10:15:58 PM

To: csevold@uswest.com

cc:

Subject: [Fwd: Klein status report for July 9, 1999]

Message ID: <3786C114.ECA1FAFB@uswest.com>
Date: Fri, 09 Jul 1999 21:42:13 -0600
From: First_name Last_name <your_cuid@uswest.com>
X-Mailer: Mozilla 4.06 [en] (Win95; U)
MIME-Version: 1.0
To: billb@puc.state.sd.us, tjwelk@boycemurphy.com, csevold@uswest.com
Subject: Klein status report for July 9, 1999
Content-Type: text/plain; charset=us-ascii
Content-Transfer-Encoding: 7bit

Friday, July 9, 1999 Status Report to the South Dakota Commission regarding service improvement work for Klein Corner

I worked with our local crews this week testing the cable from the Valentine central office towards the Klein corner area of the exchange. This testing began on Tuesday, July 6th. Prior to beginning, I personally called as many customers as I could reach. I tried each customer both during the day and evening. I reached approximately 17 out of 26 customers, either directly or by leaving a voice message for them explaining that testing would be going on all week and there could be service interruptions to their service during the daylight hours. This notification process included personally talking to Sheryl Klein

and Randy Klein, I also left a voice message for Margaret Figart. I was unable to reach either Clifford Klein or Lawrence Klein.

The testing that was done required the carrier pairs to be cut so we could test sections of the cable. This was also necessary because the carrier operates on 270 volts and it produces a real "zing" when touched. This type of indepth testing requires repeated cutting and splicing of the carrier cable pair so we can narrow cable trouble to a specific spot, thus the need to keep power off of the carrier line while conducting tests. On Tuesday night the power card on the carrier system serving Milton and Sheryl Klein, and other customers, failed which may have been due to the testing work conducted that day that resulted in power surges to the card. Service was restored the next day when we became aware of the problem. On Friday I became aware of a trouble report that had been filed on the Milton Klein phone number from 12:23 p.m. on Thursday. The out of service condition was due to testing and cable repair work we were doing all day Thursdaty until about 8:30 p.m., thus there was no real service problem. This out-of-service condition was within the period of time that I had told Sheryl Klein that service could be interrupted due to the work on the line that we were engaged in.

The only work left from the original list I provided to the Commission is the replacement of about 5,000 feet of cable near Margaret Figart, and the drop serving Ms. Figart. We have received the Todd County road permit and this cable will be replaced next week and it will also be spliced into service next week. When I originally requested an extension to July 30th I anticipated that some additional work would be discovered once final testing began. This has proven to be the case. I committed to fixing the cable and carrier plant so USW could honestly say that quality service was being provided to the customers in the Klein corner area. Testing this week concentrated on potential problems that could create future service problems since we have already fixed the known problems. This week we found three potential problems. These "problems" are not now adversely affecting the service to any of the customers in the Klein corner area, but could have affected service although perhaps not for years. The first problem is a short section of buried cable that we discovered to have water in it. The insulation around each cable conductor has protected the circuits from signal interference, but we will replace a 200' section of 19 gauge, 100 pair cable next week. Because this is a short section of cable, we have it in stock in Omaha so this work will not jepardize the July 30th deadline. We also found a small (about 15 inches long) spot on the buried cable where gophers have eaten the outer shealth. Although the metal inner shealth has kept water out, this could ultimately result in service affecting trouble. It has been repaired. Finally, we found another section of cable where the gophers have eaten the outer cable sheath. We have uncovered a forty foot section of cable where the entire outer shealth is gone. Next week we will expose the cable as far as necessary to find where the gophers stopped eating the cable sheath. We haven't done that yet because it will require crossing a road and we don't want to open a trench near a road until we have the replacement cable in hand. We have a 400 foot section of 19 gauge, 50 pair cable in Ainsworth and will have our subcontractor go over to Ainsworth and get it the first part of next week. We expect the total amount of cable damaged by the gophers will be less than 400' so we should be able to complete all repairs before the July 30th deadline. Again, this damage, although extensive, is not service affecting at this time because the metal inner shealth has kept moisture out of the cable.

Additional testing will be done next week on the cables we didn't get to this week. I anticipate that we will begin carrier and subscriber line testing will begin the week of July 19th.

Hoseck, Camron

From: Bullard, Bill
To: Best, Harlan; Healy, Leni; Hoseck, Camron; Cremer, Karen
Subject: FW: July 19, 1999 Report to Commission
Date: Monday, July 19, 1999 11:50AM

-----Original Message-----
From: First_name Last_name [mailto:your_cuid@uswest.com]
Sent: Monday, July 19, 1999 10:21 PM
To: [illegible]
Subject: July 19, 1999 Report to Commission

This is my report to the South Dakota Commission regarding service quality improvements we are making in the Klein Corner area of the Valentine, NE exchange. Please share this with the Commissioners.

This report is being mailed out today because I was in a hearing in Phoenix the end of last week which, with travel, prevented me from gathering the data until this morning. Last week we completed the cable/wire replacement (including splicing) of about 5,500' serving Margaret Figert (this is the work delayed for the Todd County road permit). We also replaced about 200' of 100 pair cable that was found to be wet, per my last report. This cable is spliced and working. We also continued our testing and we have not found any additional work that is needed.

This week we are replacing about 200' of cable we found to have the sheath eaten away by gophers, as I previously reported to you. That replacement will be spliced and in service by the end of this week. Testing will continue this week on the cable and carrier systems. Next week I will conduct end-to-end testing of the cable, the carrier systems serving the customers in the Klein Corner area, and I will also do testing at the customers' homes to make sure that service quality readings are within acceptable service parameters. Any adjustments required to deliver quality service to the customers in this area will be done prior to July 30th.

Sincerely,
Ed Peters
Manager, U S WEST

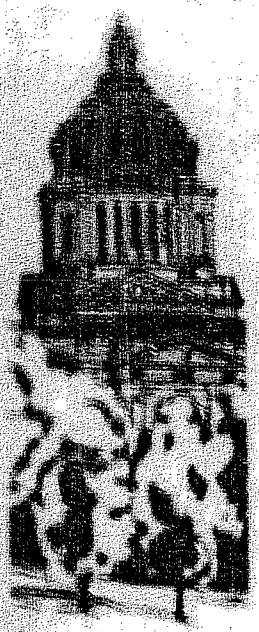

South Dakota
Public Utilities Commission

State Capitol Building, 500 East Capitol Avenue, Pierre, South Dakota 57501-5070

July 29, 1999

Ms. Sheryl L. Klein
HC 14, box 37
Valentine, NE 69201

Ms. JoAnn Klein
HC 14, Box 37A
Valentine, NE 69201

Mr. Lawrence Klein
HC 14, Box 37B
Valentine, NE 69201

Ms. Margaret Figert
P. O. Box 229
Mission, SD 57555

Re: Sheryl Klein Complaint - Docket TC98-183
JoAnn Klein Complaint - Docket TC98-184
Lawrence Klein Complaint - Docket TC98-199
Margaret Figert Complaint - Docket TC98-212

Dear Folks:

As you know, the Commission on June 15, 1999, entered an order giving U S WEST until July 30, 1999, to complete its work on your exchange. The question I have is whether or not your service has become more reliable and the quality has improved or whether the conditions that plagued you in the past continue to do so. The reason I would value your input is that if U S WEST has not done this by July 30, 1999, we may have to institute proceedings for fines and we would probably have to have another hearing to take additional testimony with regard to the quality of service that you have.

If you could drop me a note as to what your situation is, I would appreciate it. Likewise, if this could be done the sooner the better after July 30, 1999, it would be most useful to me.

Thank you.

Very truly yours,

Camron Hoseck
Staff Attorney

CH:dk
Enc.

cc: Ms. Leni Healy

faxed copy sent 8/6/99

U S WEST COMMUNICATIONS

Sioux Falls, South Dakota
August 6, 1999

RECEIVED
AUG 09 1999
SOUTH DAKOTA PUBLIC
UTILITIES COMMISSION

Mr. William Bullard
Executive Director
Public Utilities Commission
State Capitol Building
Pierre, South Dakota 57501

Attached is a memo from Ed Peters along with the final test results for the four Valentine customers.

The Commission indicated their intention to hold another hearing regarding this matter. Please notify U S WEST of the hearing date.

Sincerely,

Colleen Sevold

Colleen Sevold
Manager-Regulatory

MEMORANDUM

Re: Final Report on Service Quality for Klein Corner, South Dakota in the Valentine, Nebraska Exchange

This is my final report to the Commission regarding the service quality complaints in the Klein Corner, South Dakota, area of the Valentine, Nebraska Exchange. Please share this report with the Commissioners. As I informed you last week, all voice services in this area now meet the service quality standards that U S WEST seeks to provide to its customers. I tested all services on July 26, 1999, and found these to not only be within standards, but to be well within the standards. I believe all customers are getting a high level of voice grade service.

U S WEST completed all work that was promised to the Commission prior to July 30, 1999, as ordered by the Commission. In addition, U S WEST replaced additional drops and network interface devices, not previously reported to the Commission, at the customer's homes to ensure a high quality of service to the customers in this area. The work U S WEST performed extended to all customers in this general area. Attachment 'A' provides the actual results I measured on July 26 as compared to the standards, for the four customers that filed complaints in this area.

Ed Peters
8/5/99

TEST RESULTS FOR SERVICE QUALITY IN KLEIN CORNER, VALENTINE, NE EXCHANGE

Measurement	Standard	Milton & Sheryl Klein	Clifford & JoAnne Klein	Randy Klein	Lawrence Klein	Margaret Figart
Loop Current	20 ma or greater	22.0 ma	22.1 dB	22.5 ma	22.0 ma	23.3 ma
Loss	8.5 dbm or less	6.1 dBm	5.6 dBm	5.3 dBm	5.2 dBm	5.4 dBm
Metallic Noise	30.0 dBnrc or less	10.1 dBnrc	13.4 dBnrc	8.4 dBnrc	10.0 dBnrc	14.7 dBnrc

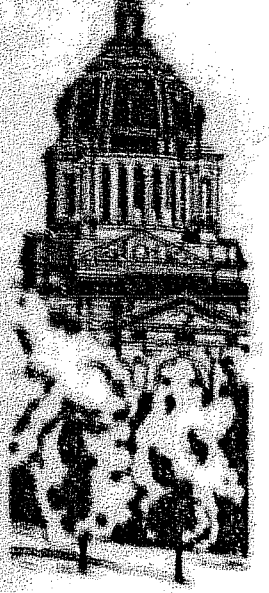

South Dakota
Public Utilities Commission

State Capitol Building, 500 East Capitol Avenue, Pierre, South Dakota 57501-5070

August 11, 1999

Ms. Sheryl L. Klein
HC 14, box 37
Valentine, NE 69201

Ms. JoAnn Klein
HC 14, Box 37A
Valentine, NE 69201

Mr. Lawrence Klein
HC 14, Box 37B
Valentine, NE 69201

Ms. Margaret Figert
P. O. Box 229
Mission, SD 57555

Re: Sheryl Klein Complaint - Docket TC98-183
JoAnn Klein Complaint - Docket TC98-184
Lawrence Klein Complaint - Docket TC98-199
Margaret Figert Complaint - Docket TC98-212

Dear Folks:

Enclosed each of you will find a copy of a letter from Colleen Sevold dated August 6, 1999, together with Ed Peters' report. It is my feeling that no further hearing need be held with reference to this matter. If you feel differently than that, please let me know.

Thank you.

Very truly yours,

Camron Hoseck
Staff Attorney

CH:dk
Enc.

cc: Ms. Leni Healy

P.S. Dear Mr. Klein: To date, I have not received a response from you concerning the letter I sent to you on July 29, 1999. I am enclosing a copy of that letter and I would appreciate hearing from you as soon as possible. Thank you.

CH
Enc

BEFORE THE PUBLIC UTILITIES COMMISSION OF THE STATE OF SOUTH DAKOTA

IN THE MATTER OF THE COMPLAINT FILED BY MRS. CLIFFORD (JOANN) KLEIN, VALENTINE, NEBRASKA, AGAINST U S WEST COMMUNICATIONS, INC. REGARDING POOR SERVICE AND A REQUEST TO HAVE LINES UPDATED	))))))	ORDER FOR AND NOTICE OF HEARING TC98-184

On October 8, 1998, the Public Utilities Commission (Commission) received a complaint filed by Mrs. Clifford (JoAnn) Klein, Valentine, Nebraska (Complainant), against U S WEST Communications, Inc. (U S WEST) regarding poor service. Complainant outlines a series of service outages, repair difficulties, outdated service, phantom calls, and staffing issues. Complainant also requested adjustment to her U S WEST bill for services not used and long distances calls not made by her.

Pursuant to ARSD 20:10:01:08.01 and 20:10:01:09, if a complaint cannot be settled without formal action, the Commission shall determine if the complaint shows probable cause of an unlawful or unreasonable act, rate, practice or omission to go forward with the complaint.

On November 3, 1998, at a duly noticed meeting, the Commission considered this matter. The Commission voted unanimously to find probable cause. U S WEST filed its answer on November 30, 1998.

The hearing was held on February 3, 1999, beginning at 1:30 P.M., at Cherry-Todd Electric Cooperative, West Highway 18, Mission, South Dakota. The Commission also heard the complaints filed against U S WEST in dockets TC98-183, TC98-199, and TC98-212, since those complaints concern the same general area as this complaint. At the hearing, U S WEST stated that it would do testing and any necessary repairs and report to the Commission. U S WEST filed updates on April 2, 1999 and May 7, 1999. In its April 2, 1999, update, U S WEST reported that it needed to replace part of the buried cable and stated it would take around 90 days to get the cable, make the replacements, and test the system.

At its May 12, 1999, meeting, the Commission unanimously voted to require U S WEST to complete its repairs and testing by June 8, 1999. On June 4, 1999, the Commission received a Motion to Extend Deadline from U S WEST. U S WEST requested that an extension be granted until July 30, 1999, for the completion of all cable work and testing of all carrier systems on the route. At its June 8, 1999, meeting, the Commission considered how to proceed. After listening to comments from the parties, the Commission voted to grant the extension until July 30, 1999. The Commission further voted that if U S WEST fails to meet the July 30, 1999, deadline, the Commission shall issue a show cause order as to why U S WEST should not be fined $1000.00 per day for each day the work remains uncompleted after July 30, 1999. The Commission also voted to hold another hearing after July 30, 1999, to take additional testimony as to the Complainant's quality of service.

The Commission again considered this matter at its August 17, 1999, regularly scheduled meeting. A report was given by both U S WEST and complainants who noted that service problems still exist. The Commission has jurisdiction in this matter pursuant to SDCL Chapters 1-26, 49-2, 49-13, including 49-13-1 through 49-13-14, inclusive, and SDCL Chapter 49-31, including 49-31-3,

49-31-7, 49-31-7.1, 49-31-7.2, 49-31-10, 49-31-11, 49-31-38, 49-31-38.1, 49-31-38.2, 49-31-38.3, 49-31-60, 49-31-61, and ARSD Chapter 20:10:33.

A hearing shall be held on November 4, 1999, beginning at 1:30 P.M., at Cherry-Todd Electric Cooperative, West Highway 18, Mission, South Dakota. All persons so testifying will be subject to cross-examination by the parties. The order of the proceeding will be in the following sequence: (1) Complainant; (2) U S WEST; and (3) Staff.

The issues at the hearing are: (1) If the quality of service being provided by U S WEST since July 30, 1999, has been reliable and adequate; and (2) If U S WEST has failed to provide reliable and adequate service since July 30, 1999, what action should now be taken by the Commission.

The hearing shall be an adversary proceeding conducted pursuant to SDCL Chapter 1-26. All parties have the right to be present and to be represented by an attorney. These rights and other due process rights shall be forfeited if not exercised at the hearing. If you or your representative fail to appear at the time and place set for the hearing, the Final Decision will be based solely on the testimony and evidence provided, if any, during the hearing or a Final Decision may be issued by default pursuant to SDCL 1-26-20. After the hearing, the Commission will consider all evidence and testimony presented at the hearing. The Commission will then enter Findings of Fact, Conclusions of Law, and a Final Decision regarding this matter. As a result of the hearing, the Commission shall determine whether U S WEST committed an unlawful or unreasonable act, rate, practice, or omission; and specifically, whether U S WEST has been providing adequate and reliable service since July 30, 1999, and, if not, what relief may be appropriate. The Commission's Final Decision may be appealed by the parties to the state Circuit Court and the state Supreme Court as provided by law. It is therefore

ORDERED that a hearing shall be held at the time and place specified above on the issue of whether U S WEST committed an unlawful or unreasonable act, rate, practice or omission; specifically, whether U S WEST has been providing adequate and reliable service since July 30, 1999, and if not, what relief would be appropriate.

Pursuant to the Americans with Disabilities Act, this hearing is being held in a physically accessible location. Please contact the Public Utilities Commission at 1-800-332-1782 at least 48 hours before the hearing if you have special needs so arrangements can be made to accommodate you.

Dated at Pierre, South Dakota, this 27th day of September, 1999.

CERTIFICATE OF SERVICE

The undersigned hereby certifies that this document has been served today upon all parties of record in this docket, as listed on the docket service list, by facsimile or by first class mail, in properly addressed envelopes, with charges prepaid thereon.

By Melanie Kolbo

Date 9/27/99

(OFFICIAL SEAL)

BY ORDER OF THE COMMISSION:

James A. Burg

JAMES A. BURG, Chairman

Pam Nelson

PAM NELSON, Commissioner

Laska Schoenfelder

LASKA SCHOENFELDER, Commissioner

THE PUBLIC UTILITIES COMMISSION

OF THE STATE OF SOUTH DAKOTA

RECEIVED
NOV 10 1999
SOUTH DAKOTA PUBLIC
UTILITIES COMMISSION

IN THE MATTER OF THE COMPLAINT FILED BY SHERYL L. KLEIN, VALENTINE NEBRASKA, AGAINST U S WEST COMMUNICATIONS, INC. REGARDING POOR SERVICE AND REQUEST TO HAVE LINES UPDATED	TC98-183
IN THE MATTER OF THE COMPLAINT FILED BY JOANN C. KLEIN, VALENTINE NEBRASKA, AGAINST U S WEST COMMUNICATIONS, INC. REGARDING POOR SERVICE AND REQUEST TO HAVE LINES UPDATED	TC98-184
IN THE MATTER OF THE COMPLAINT FILED BY LAWRENCE KLEIN, VALENTINE NEBRASKA, AGAINST U S WEST COMMUNICATIONS, INC. REGARDING POOR SERVICE AND REQUEST TO HAVE LINES UPDATED	TC98-199
IN THE MATTER OF THE COMPLAINT FILED BY MARGARET FIGERT, MISSION SOUTH DAKOTA, AGAINST U S WEST COMMUNICATIONS, INC. REGARDING POOR SERVICE AND REQUEST TO HAVE LINES UPDATED	TC98-212

HEARD BEFORE THE PUBLIC UTILITIES COMMISSION

PROCEEDINGS: November 4, 1999
1:30 P.M.
Cherry-Todd Electric Co-op
West Highway 18
Mission, South Dakota

ORIGINAL

PUC COMMISSION: Jim Burg, Chairman
Laska Schoenfelder, Commissioner
Pam Nelson, Commissioner

COMMISSION STAFF PRESENT: Rolayne Wiest
Camron Hoseck
Gregory A. Rislov
Michele Farris

Reported by: Lori J. Grode, RMR/CRR

A P P E A R A N C E S

For US West: Thomas J. Welk
P.O. Box 5015
Sioux Falls, South Dakota
57117-5015

and Colleen Sevold

Also Present: Edward Peters

INDEX

Witness	Page
Margaret Figert	7
JoAnn Klein	10
Lawrence Klein	12
Milton Klein	23
Sheryl Klein	35
Edward A. Peters	38

EXHIBITS

1	6-18 e-mail from Ed Peters
2	6-29 e-mail from Ed Peters
3	7-3 e-mail from Ed Peters
4	7-19 e-mail from Ed Peters
5	7-29 e-mail from Ed Peters
6	Memorandum from Ed Peters
7	Ed Peters Report
8	Milton Klein e-mail to Ms. Sevold
A	Lawrence Klein Calendar
B	Sheryl and Milton Klein Calendar
C	Sheryl and Milton Klein notes

P R O C E E D I N G S

(EXHIBITS NO. 1 - 7 WERE MARKED FOR IDENTIFICATION.)

CHAIRMAN BURG: I'll open this hearing. I will resume the hearing from the February 3rd hearing for Dockets TC98-183, TC98-184, TC98-199, and TC98-210 in the matter of the complaints filed by Sheryl L. Klein, JoAnn Klein, Lawrence Klein, all of Valentine, Nebraska, and Margaret Figert of Mission, South Dakota, against U S West Communications regarding poor service and a request to have lines updated.

The time is approximately 1:30, the day is November 4, 1999; and the location of the hearing is at Cherry-Todd Electric Cooperative, West Highway 18, Mission, South Dakota.

I am Jim Burg, Commission Chairman. Commissioners Laska Schoenfelder and Pam Nelson are also present. I'm presiding over this hearing.

The hearing was noticed pursuant to the Commission's Order for and Notice of Hearing issued September 27, 1999.

The issue at this hearing are, one, if the quality of service being provided by U S West since July 30, 1999, has been reliable and adequate, and item two, if U S West has failed to provide reliable

and adequate service since July 30, 1999, what action should now be taken by the Commission.

All parties have the right to be present and to be represented by an attorney. All persons so testifying will be sworn in and subject to cross-examination by the parties. The Commission's final decision may be appealed by the parties to the State Circuit Court and the State Supreme Court.

Rolayne Wiest will act as Commission counsel. She may provided recommended rulings on procedural and evidentiary matters. The Commission may overrule its counsel's preliminary rulings throughout the hearing. If not overruled, preliminary rulings will become final rulings.

And at this time I'll turn it over to Rolayne to conduct the hearing.

MS. WIEST: I'll just take the appearances of the parties first. Sheryl Klein? (Indicated present.)

JoAnn Klein?

MS. JOANN KLEIN: Yes.

MS. WIEST: Lawrence Klein?

MR. LAWRENCE KLEIN: Here.

MS. WIEST: And Margaret Figert?

MS. FIGERT: Right here.

MS. WIEST: U S West?

MR. WELK: Tom Welk, attorney from Sioux Falls representing U S West. Today with me are [illegible] Sevold, manager of the regulatory affairs, and [illegible] Peters.

CHAIRMAN BURG: Staff.

MR. HOSECK: Camron Hoseck on behalf of Commission staff.

MS. WIEST: Are there any motions from any of the parties before we get started with the testimony?

MR. HOSECK: I don't think that this would necessarily be a motion, but I talked to Mr. Welk about this beforehand.

What I would intend to do is call the parties, since we're in the compliance phase of this matter, and in the name of the public interest just call the parties as witnesses and do redirect examination of them as a staff counsel.

CHAIRMAN BURG: Did you have any objection, Mr. Welk?

MR. WELK: No.

MS. WIEST: Does anybody want to make an opening statement before we get started with the testimony?

MR. HOSECK: None by me.

MR. WELK: No.

MS. WIEST: Do any of the complainants? Okay. I think we can get started. Mr. Hoseck.

MR. HOSECK: Okay. I would call Margaret Figert to the stand, please.

MARGARET FIGERT,

called as a witness, being first duly sworn, was examined and testified as follows:

DIRECT EXAMINATION

BY MR. HOSECK:

Q. Would you state your name for the record, please?

A. Margaret Figert.

Q. And are you the same Margaret Figert that testified in this matter on February 3rd, 1999?

A. I hope so, yes.

Q. Would you describe for the Commission what your phone service has been like at your residence since July 30, 1999?

A. Fantastic. You guys ought to be happy to hear that. It's been good. We've had some echoing. But every time I've used the phone since the new lines I understand we've been on, it's been good.

I am concerned about the fact that we had no rain, because prior to that time every time it rained we lost phone service. Every time it froze, the ground

heaved and shifted, we lost phone service. My sense is we'll learn this winter a lot more about whether the changes and the upgrades have been adequate.

MR. HOSECK: I have no further questions of this witness.

MS. WIEST: Mr. Welk.

CROSS-EXAMINATION

BY MR. WELK:

Q. Margaret, have you made any trouble reports to the company on your service since July 30?

A. No.

MR. WELK: I have nothing further.

MS. WIEST: Commissioners?

COMMISSIONER SCHOENFELDER: Do you have a computer where this phone is?

A. As of last week, yes.

COMMISSIONER SCHOENFELDER: Do you have Internet service?

A. Not yet. I ordered the modem this morning. I wanted to do it before today's hearing, I told Cameron that, but I simply couldn't. I haven't been home.

COMMISSIONER SCHOENFELDER: But I believe before this the testimony has been that that line might not support it, so I was interested is all. I'll see that later on from someone.

A. I'm hoping it will because I made the investment this morning and it's been ordered. And when we get it installed, we'll see what happens.

COMMISSIONER SCHOENFELDER: Thank you.

CHAIRMAN BURG: You have not had any outage or any static problems since July 30?

A. We've had some echoing. I don't know how to describe it. Do you ever get echoes on the cell phone? Almost the same thing, kind of a drum beat in the background.

COMMISSIONER SCHOENFELDER: You don't think that's your own phone set or something like that? You think it's coming off the line?

A. It came off the line before July 31st.

COMMISSIONER SCHOENFELDER: Have you tried a different phone?

A. Yes.

COMMISSIONER SCHOENFELDER: Thanks.

CHAIRMAN BURG: I guess I don't have anything else.

MS. WIEST: Any redirect?

MR. HOSECK: No redirect.

MS. WIEST: Thank you.

MS. FIGERT: That's it?

MS. WIEST: Sheryl Klein. I'm sorry.

MR. HOSECK: I'd like to call JoAnn Klein to the stand, please.

JOANN KLEIN,

called as a witness, being first duly sworn, was examined and testified as follows:

DIRECT EXAMINATION

BY MR. HOSECK:

Q. Would you state your name for the record, please?

A. JoAnn Klein.

Q. And are you the same JoAnn Klein that testified on this matter on February 3rd, 1999?

A. Yes.

Q. Would you describe for the Commission what your phone service has been like since July 10, 1999?

A. Essentially it's been good. We've had a couple incidents in which we have talked. One, I was talking to my sister-in-law, Jo Klein, and it was noisy so we ceased our conversation. And my husband was talking to his brother Lawrence one day and the same thing happened. And one of them said, "I'm going to hang up and I'll call back." Essentially that's the only problems we've had. And we did not call in to report it.

MR. HOSECK: I have no further questions of

this witness.

MS. WIEST: Mr. Welk.

CROSS-EXAMINATION

BY MR. WELK:

Q. JoAnn, when were these two incidents you just described?

A. Within the last month, but I didn't write it down on the calendar. I didn't.

Q. In October?

A. Yes.

MR. WELK: And both of those instances were to Lawrence's house?

A. That's right.

MR. WELK: Okay. Thank you very much. That's all I have.

CHAIRMAN BURG: When you called back, was it clear then?

A. Well, one of the calls, I think, was my husband to his brother and then it was all right. And the other we just -- I said just, "Okay, well, I told you what I wanted you to know, bye," you know.

CHAIRMAN BURG: But when he re-called, the noise was gone?

A. I think so, yes.

CHAIRMAN BURG: Thank you.

MS. WIEST: Any other questions of the Commissioners? Any redirect?

MR. HOSECK: No redirect.

MS. WIEST: Thank you.

MR. HOSECK: I would call Lawrence Klein to the stand, please.

LAWRENCE KLEIN,

called as a witness, being first duly sworn, was examined and testified as follows:

DIRECT EXAMINATION

BY MR. HOSECK:

Q. Would you state your name for the record, please?

A. Lawrence Klein.

Q. And are you the same Lawrence Klein that testified in this matter on February 3rd, 1999?

A. I am.

Q. Okay. Since July 30, 1999, have you had any problems with your phone service?

A. Yes.

Q. Okay. And at a point in time did I send you a calendar in which to mark days in which you had experienced problems with your phone service?

A. That you did.

Q. Okay.

(EXHIBIT A WAS MARKED FOR IDENTIFICATION.)

A. Now, my wife kept this record, not me.

Q. I'm going to show you what has been marked as Exhibit A and ask you if you recognize that document?

A. I do.

Q. And is that the document that you filled out and sent back to me?

A. My wife filled it out and sent it back to you.

Q. Okay. And when this document was filled out, were you present when your wife was --

A. I was present when she filled it out.

Q. And do these represent days that you had some sort of problem with your phone service?

A. Yes, they did.

MR. HOSECK: At this time I would move Exhibit A into the record.

MS. WIEST: Any objection?

MR. WELK: No, except some foundation as to what the problems were, but I don't have any problem with the exhibit itself.

MS. WIEST: Okay. Exhibit A has been offered and received.

Q. Lawrence, could you go through and to the best of your recollection tell the Commission what

problems you experienced on the days that are marked on this Exhibit A?

A. Well, I cannot honestly tell you all of them. I mean this one on the 13th, I'm pretty sure was when she was visiting with a neighbor and all of a sudden it got so noisy that they couldn't understand each other so they just discontinued the conversation. And she called the same day and the representative came out the next day to check the phone, but how do you check a phone when the trouble is gone? I mean, you can't be right there when it happens, that's for sure.

Q. And when you say --

A. And I think these other instances are cases that she always called U S West when something happened.

Q. Okay. When you say the 13th, are you talking about the 13th of September?

A. 13th of September, yes.

Q. Okay. And since the 14th of September what has your phone service been like?

A. The only problem we've had since then was that we'd get a ring and we'd pick it up before the second ring and nobody on the line. Now, in most instances if we'd let it ring the second time, for some reason or another we had the party. I don't understand

that. But that's the way it worked out any way.

Q. Okay. And so would it be accurate to say that after the 14th of September you have not had any problems with your phone service?

A. No, I can't say that because, like I say, we've had these instances with where we've got a ring and we picked up the phone and nobody on the line.

Q. Did you phone those instances in to U S West?

A. No, we didn't. I guess they were so minor that we didn't. I don't know why we didn't.

Q. Okay. When did you first start having problems with your phone service? When this all started?

A. I'm sure it's been over two years ago probably. I think the first complaint we filed was November of '98 but we had trouble before that.

Q. Do you have computer usage on your phone service at all?

A. No, we do not.

Q. And do you -- have you checked out any of your inside wiring? In other words, the wiring inside your house as to a possible cause of this problem?

A. Well, he's been out and checked it and his help have been out and checked it. And I've still got backup wiring, so they're supposed to take care of my

inside lines and they have checked it.

Q. And the gentleman you were speaking to was Mr. Peters?

A. Peters.

Q. With U S West; is that correct?

A. Yeah. And he had some other guys out with him the day they was checking it.

Q. When you say you have the service, what did you call the service that you say you had as far as inside wiring?

A. Would you repeat that question, please?

Q. What kind of -- you used the term to describe the service that you had with regard to your inside wiring. What was that?

A. Well, we didn't know what it was. Just the reason we checked it out because we was having a problem with and couldn't figure out what it was so they decided they would check the inside wire.

And they did loan me a phone to use for a week or so and they wanted us to log all the problems we had in the meantime. And she did that, and we didn't have that much of a problem. But I'm sure it wasn't the phone because we've used the same phone since and no problem.

Q. Do you subscribe to a service from U S West

to maintain your inside wiring?

A. That's right.

MR. HOSECK: Okay. I don't believe I have any further questions of this witness.

MS. WIEST: Mr. Welk.

MR. WELK: Wait, wait, wait.

A. Sorry.

CROSS-EXAMINATION

BY MR. WELK:

Q. Lawrence, I want to make sure that I understand the number of times that the trouble has been reported. Did you make yourself any reports to U S West for any trouble?

A. I did not. My wife did.

Q. All right. I want to tell you that our records only reflect maybe one or two reports on service. So what's your understanding as to how many times there were reports of trouble to U S West?

A. I think that she reported more often than that. I just don't understand why it didn't.

Q. I can only tell you what I've been told were the records.

A. Yeah.

Q. Now, there have been several people from U S West out looking at your phones; is that correct?

A. Yes, there has.
Q. Do you have a cordless phone in your house?
A. Yes, I do.
Q. How many do you have?
A. Just one.
Q. Just one. And you said that and I understand, too, that U S West gave you a loaner phone for a week or two to see?
A. Right.
Q. And when you had the loaner phone, were there any problems?
A. I don't believe there was, but the biggest problem was that we was gone for the week that we had one week we had the phone so how would we know.
Q. Well, I know that they've been trying to isolate the problems out there and they've had difficulty with your phones out there wanting to know whether that's a problem or not. Do you still hear some sounds on the cordless phone now today?
A. I don't think we had any sounds on the cordless phone that we didn't have on the other one.
Q. You don't think it was anything to do with your phones?
A. I sure don't.
Q. When you did have the loaner phone when you

were home, did you have any problems on the loaner phone?

A. No.

Q. And let's get back to what the complaints have been on that. Now, are you saying that there was one -- on these dates that you have on the calendar like August 4th, what was wrong with your service on August 4th?

A. There again, I can't verify it because my wife is the one that put the information down on the calendar.

Q. So you don't know what the problem was?

A. No, I can't.

Q. And on August 7th on the calendar do you know what the problem was?

A. Nope.

Q. And if I ask you for each day on the calendar, you couldn't give me an answer?

A. I could not, until we get down here.

Q. On which date?

A. The 13th of September.

Q. And that was the date and what was on that day?

A. She was talking to my neighbor and the phone got so noisy that they couldn't understand the

conversation, so they just hung up and forgot about it I guess.

Q. And then did they call back that day?

A. They did call in that day. And you've got a record of that?

Q. We'll ask Mr. Peters if we've got some records on some of that. There was a call in on 8/14 which would have been --

A. That would have been August.

Q. Yeah, in August.

A. I've got the thing marked here so evidently

Q. But all right, there was on August 14th there was -- I've been informed there was a call in?

A. Uh-huh.

Q. But the day that your wife had problems with the noisy line and hung up, did she call back then later and it worked, or what do you recall happened?

A. I don't recall. I think they just forgot about the whole thing is what I thought.

Q. So you don't know whether it cleared on that day or not?

A. I think -- I mean she wasn't talking to the same party on that day. The phone was clear after that I'm sure of that. But, like I said, she called in that day and then the guy came out the next day. Well, what

do you do the next day the problem isn't there any more? I don't know.

Q. Lawrence, how many times have U S West people been out to your place to help look at your service?

A. Oh, I'd say probably a half a dozen since probably since the 30th of July.

Q. Just checking in I mean all the lines went in before then and correct?

A. They had to make some corrections since then, haven't you?

Q. We'll have Ed testify to that.

A. As far as changing over to a different line or something coming into town?

MR. PETERS: I don't believe I'm allowed to respond.

Q. I'll put him up and explain. I just want to know from your perspective.

A. The question was what again?

Q. How many times have they been out to look to try to work with you?

A. Well, I'm sure I'd say five or six.

Q. Okay. And have you found them all courteous and responsive to your concerns?

A. Yes.

Q. And as I understand, you haven't had,

although you can't state except for the 11th of September what the issue was since then, there's been no problems with your service?

A. Other than this, like I say, single ring and you pick up the phone and nobody there.

MR. WELK: I have nothing further.

MS. WIEST: Commissioners?

CHAIRMAN BURG: I just have a couple quick ones. You had talked about the service that you have from U S West that they looked at the -- just for the record, do you recall is that service called line backer?

A. Yes.

CHAIRMAN BURG: I just wanted to make sure because that is the name of a service I'm aware of.

A. Yeah.

CHAIRMAN BURG: Oh, the person that your wife was talking to when you had this, the static on the line, is that neighbor also on a U S West line?

A. Yes.

CHAIRMAN BURG: Okay. I just wanted to see if we made sure we pinned that down.

MS. WIEST: Any redirect?

MR. HOSECK: No redirect.

MS. WIEST: Thank you.

MR. HOSECK: I would call Milton Klein to the stand at this time.

MILTON KLEIN,

called as a witness, being first duly sworn, was examined and testified as follows:

DIRECT EXAMINATION

BY MR. HOSECK:

Q. Would you state your name for the record, please?

A. Milton Klein.

Q. And are you the same Milton Klein that testified in this matter on February 3rd, 1999?

A. Yes, I am.

Q. And is it your understanding that certain extensions of time have been granted to U S West in order to test and fix what is commonly referred to as the Valentine Exchange here in South Dakota?

A. Yes.

Q. And do you further understand that there was a July 30, 1999, deadline for U S West to provide reliable and adequate service?

A. Yes.

Q. And that would have been on that exchange; is that correct?

A. Correct.

Q. Since July 30, 1999, have you kept a log or notes of the situations that you have encountered in telephone service?

A. Yes, we have.

Q. And did you during this period of time report problems that you encountered to U S West?

A. There's one incident that I believe I'll have one trouble report that was reported during that time period.

(EXHIBIT B WAS MARKED FOR IDENTIFICATION.)

Q. Milton, I'm going to show you what's been marked as Exhibit B and I would ask you to tell the Commission what this exhibit is.

A. Mr. Hoseck requested that we fill out a calendar indicating since July 30 what days we had encountered any kind of situations involving the phone. And so from my log I marked those dates on this calendar. I have log entries on those dates indicating various phone situations that we encountered.

MR. HOSECK: I would move Exhibit B into evidence.

MS. WIEST: Any objection?

MR. WELK: No objection.

CHAIRMAN BURG: B as in boy?

MS. WIEST: B has been offered and admitted.

(EXHIBIT C WAS MARKED FOR IDENTIFICATION.)

Q. Milton, I have given you a document which has been marked as Exhibit C and I would ask you to identify that document for the Commission, please.

A. This is a -- copies of the logs that we had from 30th of July until the present.

Q. And Exhibit C consists of five pages; is that correct?

A. That's correct.

Q. Okay. Let's start with the first page which has a reference to the 8th of August 1999. Could you summarize your notes and tell the Commission what the phenomenon was that you observed with regard to your telephone service?

A. Yes. In the morning, that was a Sunday morning, and my wife tried to call Lawrence. It says Jo on here, that's his wife, at 378-3848. And I was also present in the room same time, and you could just hear instead of just this real loud squealing sound, you couldn't even -- I could hear this clear across the room.

And she tried again and got the same thing. And then she called Lawrence's daughter-in-law Vickie and let them know what the situation was with their phone was. And I tried another time the same day at

11:30 and I got the same thing. And the next day I tried again and got the same sound.

Q. Okay. Going to the second page, would you just go through these various dates and tell the Commission what it was that you observed?

A. Well, this particular time period I was calling around the neighborhood to in preparation for the last -- we had a Commission meeting on I believe the 16th or 17th of August. We were to review what was going on with this problem, and I was trying to figure out how any neighbors were getting along.

And I called the Bakers and he said his phone had been better. But while we were talking, I kept having this loud ringing noise in the background. And I tried to call another one of my neighbors, Evelyn Whiting, on several times on the 13th and 14th and 15th, and I just kept getting a busy signal. And I found out later that apparently they weren't talking on the phone. It was just inoperational.

And I talked to another neighbor, Don Bryan. They said there was still some ringing on their phone from time to time. I didn't hear this myself but this is what he told me. And on the 15th my wife talked to Evelyn Whiting, and she told her that her phone was worse than ever, dinging, shrieking and no dial tone.

et cetera.

Q. But was this something that you personally observed?

A. I did not, my wife. No, I didn't witness that. The only thing I witnessed on their phone was I just kept getting a busy when I tried to call her.

Q. And then if you would go to the third page of Exhibit C and explain what your notes mean.

A. Those are my wife's writing on the 15th. She tried to call Lawrence again and still -- and talked to Jo and indicated that their phone had still been pinging that afternoon. And they had a long distance call and they couldn't talk due to the shrieking sounds on the 15th.

Q. And turning to the fourth page, would you go over your notes there and explain them to the Commission?

A. This is 25 of August?

Q. Yes.

A. Okay. I got in here at 7:50 in the morning the phone had a loud background noise, and this is the same problem I had had the night before. I was making some local calls. And I checked it out. I checked out my internal phones to make sure there wasn't a problem there. And I then -- I put an automated trouble ticket

on it.

Q. Would you explain what this automated trouble ticket is?

A. Well, I went on the Internet. U S West has a site where you can put in your symptoms and send them in.

Q. And that's what you did in this incident?

A. That's what I did in that incident.

Q. Please continue.

A. Later that morning Mr. Peters was there with a tech from Norfolk had been working on the lines, and he indicated at that time that he had been soldering on the lines that morning. I believe they were trying to fix the problems that I had reported earlier from the -- I don't know, they were fixing some problems anyway. And he said that probably accounted for that all the noise on the line. They couldn't figure out for sure what caused the problem the night before because that was after dark.

Q. And then with regard to the last page of Exhibit C, would you explain to the Commission what those notes mean?

A. On September 6th we were, both my wife and I were both in our living room and the phone started making a random chirping noise again several times

It's been one of our major headache symptoms when our phone was bad.

And we both looked at each other and thought, "Oh-oh, here we go again." And so we logged that. But we didn't hear any more of it so we did not report that and we haven't heard that since.

MR. HOSECK: I'd move Exhibit C into evidence. I would offer Exhibit C.

MS. WIEST: Any objection?

MR. WELK: I object to the extent it has hearsay conversations. Whatever the witness talked and saw, or what he saw, I have no objections to, but there's a number of hearsay conversations in here which he didn't that I object to on that basis that I can't cross-examine those people.

MS. WIEST: Well, you're going to have to be more specific. What do you want?

MR. WELK: Well, he testified on --

MS. WIEST: I mean which exactly.

MR. WELK: Everything that he testified to that he didn't see or observe I'm going to object on the basis of hearsay. If you want me to go through, I can ask every one of these, which one he saw. He said several times in his testimony, "I didn't see it, I just wrote it down," and that's hearsay.

MS. WIEST: Mr. Hoseck, do you have a response?

MR. HOSECK: Well, you know, I think the record stands for itself as to -- speaks for itself, rather, as to what Milton has observed. And I can -- another witness if we need to substantiate parts of this exhibit which may have been observed by another party.

MS. WIEST: Then we can strike the parts that actually state what other people told him.

MR. HOSECK: I would have no objection to that.

MS. WIEST: Okay. And with that exception then Exhibit C is admitted.

CHAIRMAN BURG: B was admitted?

MS. WIEST: B has been, yes.

Q. Now, Milton, in looking at Exhibit B, which is the calendar that you completed at my request, how has your service been since the 6th of September?

A. It's been good.

Q. And does this include Internet usage?

A. Yes.

Q. And so would it be fair to say that the last day that you encountered problems was the 6th of September 1999?

A. That's correct.

Q. Do you recall when the complaint was originally filed by you or a member of your family?

A. I looked that up. My notes indicate that it was written on, they dated it the 5th of August 1998, and it was received in your office on -- I have it here somewheres. We signed it on the 5th of August -- or 5th of October 1998.

Q. And so for purposes of the record so we know who submitted this on behalf of your household, who is Sheryl Klein?

A. Sheryl Klein is my wife.

Q. And she was the person that actually submitted this complaint; is that right?

A. Yeah. She went in and had it notarized and signed it. We both helped prepare it.

Q. Generally what kind of problems were you encountering before the time that you filed this complaint?

MR. WELK: That's objected to. That's beyond the scope of the Notice of Hearing.

MS. WIEST: Technically it is beyond the scope.

MR. HOSECK: I think that the Commission, since we are in a phase in this thing of compliance and

remedies, the Commission has a right to have their recollection refreshed as to what the extent of these problems have been and how long they've been going on.

MS. WIEST: Wouldn't that already be in the record?

MR. HOSECK: Like I say, it's for the purpose of refreshing the recollection of the Commission since the last hearing in this matter was in February. That's the only purpose of the question.

MS. WIEST: Still it's outside the scope of the notice.

Q. Okay. Have the problems that you encountered at the time that you filed this complaint now disappeared?

A. Yes.

MR. HOSECK: I have no further questions of this witness.

CHAIRMAN BURG: Mr. Welk.

MR. WELK: Thank you.

CROSS-EXAMINATION

BY MR. WELK:

Q. Good afternoon, Milton.

A. Good afternoon.

(EXHIBIT NO. 8 WAS MARKED FOR IDENTIFICATION.)

Q. Milton, I would hand you what the Court Reporter -- has been marked by the Court Reporter as Exhibit 8, which appears to be an E-mail that you sent to Colleen Sevold on or about 10-25-99; is that correct?

A. That's correct.

Q. And this is in response to an inquiry that Ms. Sevold asked about your status and on your phone service; is that correct?

A. That's right.

Q. Was this E-mail sent from your home?

A. Correct.

Q. And at that time did she inquire as to how the status of your service had been?

A. That's correct. She left a phone message for me, wanted to know how our phone was, something to that effect.

Q. Now, Milton, as I understand your testimony, everything that you testified about today, except the August 25th, was not reported to U S West?

A. I didn't directly report -- the only one of these that I directly reported was the 25th. I think I attempted to cause it to be reported on the one the 8th and 9th and the ones on the 13th, 14th, and 15th I reported at the last on the August 17th, I believe,

Commission meeting I made them aware at that time of those problems. But as far as filing through the repair channels and trouble report would have been on the 25th.

Q. And the 25th when you did make the report, did they come out right away and respond? You said you sent it through the Internet site. Was there people that came out and responded?

A. I think they responded to it, but Mr. Barnes and the other tech happened to be already coming out there that day so I don't remember exactly what.

Q. And whatever that problem was, did it clear after that day?

A. Yes.

MR. WELK: I have nothing further. Move for admission of Exhibit 8.

MS. WIEST: Any objection?

MR. HOSECK: No objection.

MS. WIEST: Exhibit 8 has been offered and received. Commissioners, do you have any questions?

CHAIRMAN BURG: I had one. You indicated that when you called Lawrence Klein on one particular one or two days, there was a screeching noise?

A. Yes.

CHAIRMAN BURG: Are you familiar with what

happens if there's a fax machine turned on to the line?

A. Yes, I am.

CHAIRMAN BURG: Do you know if Lawrence has a fax machine or could it have been that?

A. I don't -- I'm confident he doesn't. He always testified he doesn't have a computer, so I don't think he has a fax machine.

CHAIRMAN BURG: That's all I had.

MS. WIEST: Any redirect?

MR. HOSECK: No redirect.

MS. WIEST: Thank you. Any other witness?

MR. HOSECK: At this time I would call Sheryl Klein to the stand, please.

SHERYL KLEIN,

called as a witness, being first duly sworn, was examined and testified as follows:

DIRECT EXAMINATION

BY MR. HOSECK:

Q. Would you state your name for the record, please?

A. Sheryl Klein.

Q. And are you the same Sheryl Klein that testified in this matter on February 3rd of this year?

A. Yes, sir.

Q. And have you been present in ths hearing roo

this afternoon and heard the testimony of the various parties?

A. Yes, sir.

Q. And that would include the testimony of your husband, Milton; is that correct?

A. Yes, sir.

Q. Okay. Would you tell the Commission what your recollection of the quality of service of your phone service has been since July 30, 1999? And if necessary, refer to any notes on Exhibit C which may refresh your recollection.

A. Overall we've seen some improvement compared to say a year ago when we'd go days without service. We have seen some improvement, as indicated on the notes, which in part reflect my writing and my husband's entries. We still have seen some problems. Do you want me to go over the ones that Milton was not a party to?

Q. Would you please go over the ones which represents your writing in that matter?

A. Represent my writing, okay. Mine is the cursive on the bottom of page two. August 15th I called several of the neighbors in reference to their experience. Do you want me to go over each one of those contacts?

Q. Sure.

A. First was Reggie Lameroux. She was not aware of any problems.

MR. WELK: Do you want to spell that for the Court Reporter?

A. L-a-m-e-r-o-u-x. The second was to Abbotts, which would be Bill and Kay Abbott. They didn't indicate any problems. The third was to Evelyn Whiting, which she lives about a mile from us. She indicated her phone was, quote, unquote, "worse than ever." She's an elderly woman. Her husband is elderly. They're both very frail. Dinging, shrieking and so on, as my husband read. And, well, I better not say that, I guess.

Q. And are there any other notes in Exhibit C which you would have written in there?

A. Well, the third page is in my handwriting, top of the third page, the call to Jo and Lawrence where Jo shared with me the phone was still troublesome and they had a pinging that afternoon.

Q. Is there anything further in Exhibit C?

A. The fourth and last page would be in my cursive where I recorded that the phone chirped several times. It was in the evening close to 10 o'clock.

Q. And in looking at Exhibit B, which is the

calendar, do you recall any problems with your phone after September 6th, 1999?

A. No, sir.

MR. HOSECK: I have no further questions of this witness.

MS. WIEST: Mr. Welk.

MR. WELK: I have no questions.

MS. WIEST: Commissioners? Thanks. Any other witnesses?

MR. HOSECK: I have no further witnesses.

MS. WIEST: Mr. Welk.

MR. WELK: Yes. We would call Ed Peters, please.

EDWARD A. PETERS,

called as a witness, being first duly sworn, was examined and testified as follows:

DIRECT EXAMINATION

BY MR. WELK:

Q. Would you please state your name for the record.

A. My name is Edward A. Peters.

Q. And are you the same Mr. Peters who has testified before the Commission on this matter and has filed affidavits with the Commission regarding U S West's work in regard to these complaints?

A. I am.

Q. Mr. Peters, I want to take you since the last Commission hearing when the extension was granted by this Commission. What did you do? What did U S West do after the Commission granted this extension in order to provide these complainants reliable telephone service?

A. At the hearing with the Commission where the Commission granted an extension, I identified additional work that would have to be done by U S West to bring the service in the Klein corner area up to the standards that we were shooting for.

But we have performed all that work, and we also did additional work over and above what I had identified at that time.

Q. Did you agree as part of the extension that was granted by the Commission to provide them and the complainants with updates as the work progressed?

A. I did.

Q. Did you provide a series of reports to Mr. Hoseck and the complainants and the executive director of the Commission regarding your work?

A. I believe I provided reports to Mr. Bullard and to yourself and Colleen Sevold and that she then forwarded reports on to Mr. Hoseck and to the

A. I am.

Q. Mr. Peters, I want to take you since the last Commission hearing when the extension was granted by this Commission. What did you do? What did U S West do after the Commission granted this extension in order to provide these complainants reliable telephone service?

A. At the hearing with the Commission where the Commission granted an extension, I identified additional work that would have to be done by U S West to bring the service in the Klein corner area up to the standards that we were shooting for.

But we have performed all that work, and we also did additional work over and above what I had identified at that time.

Q. Did you agree as part of the extension that was granted by the Commission to provide them and the complainants with updates as the work progressed?

A. I did.

Q. Did you provide a series of reports to Mr. Hoseck and the complainants and the executive director of the Commission regarding your work?

A. I believe I provided reports to Mr. Bullard and to yourself and Colleen Sevold and that she then forwarded reports on to Mr. Hoseck and to the

complainants.

Q. I'm going to hand you what the Court Repor has marked Exhibits 1 through 7 and ask you to ident for the record exhibit by exhibit what those are. Wh is Exhibit 1?

A. Exhibit 1 is an E-mail I sent to Mr. Bullar and I asked him in that E-mail to provide the Commission with an update of the information that I w providing to him. It is dated Friday, June 18th, 199

Q. What is Exhibit 2?

A. Exhibit 2 is another E-mail message I sent Mr. Bullard on June 29th giving a status report, and again I ask him to share this information with the Commissioners.

Q. What is Exhibit 3?

A. Exhibit 3 is another E-mail update report that I sent to Mr. Bullard on Saturday, July 3rd.

Q. As you testified, that might have been sent on Saturday, not to Mr. Bullard. You sent it to Mr. Bullard, or Ms. Sevold, or myself and it would hav been forwarded?

A. I actually prepared this message on Saturday July 3rd, and I sent it to Mr. Bullard, to yourself, and to Ms. Sevold.

Q. So Exhibit 4?

A. Is again another E-mail message that was sent out on Monday, July 19th, to Mr. Bullard and then internally to yourself and Colleen Sevold.

Q. Exhibit 5?

A. Exhibit 5 is an E-mail message I sent out on Thursday, July 29th, again to Mr. Bullard and then internally to yourself and Ms. Sevold and again with the expectation that this would be forwarded to the Commissioners.

Q. Exhibit 6, it's entitled Final Report on Service Quality, dated August 5, 1999.

A. Yes. This was memo that I prepared, and because I was on the road at that time, it was done in a Word format. It was attached to an E-mail message that I believe went to Colleen Sevold, and I believe she forwarded it on to the appropriate people who had a need to know, including Mr. Bullard and the complainants and Mr. Hoseck.

Q. Exhibit 7?

A. Is a Word document that I prepared in memo format to Mr. Bullard, dated August 31st, 1999, giving a report on the readings that were taken on the services for the complainants, as well as other people who lived in that general area, showing that the services were all within standards.

MR. WELK: Move for admission of Exhibits 1 through 7.

MS. WIEST: Is there any objection?

MR. HOSECK: I have no objection.

MS. WIEST: Exhibits 1 through 7 have been offered and admitted.

MR. WELK: Without going in detail of all the memos, the memos would set forth the work; and as you advised the Commission the work was being done; is that correct?

A. Correct.

Q. Now, let's talk a little bit about the Lawrence Klein situation and the Whiting situation. Did you advise the Commission in the August 31st letter about the Lawrence Klein situation and the Whiting situation? It's on page two.

A. Yes, I did.

Q. All right. You identified there that there was an issue regarding his phone service that had been identified and also the Whitings. What did you do to investigate those issues as set forth in that letter?

A. Yes. In your question you reference he, that being Mr. Lawrence Klein. I did investigate the problems that were going on with Mr. Klein's phone service as well as the Whiting's phone service.

Q. And what can you tell the Commission about your investigation about his service?

A. We found the intermittent problem we were having trouble identifying as to the cause of his service, his being Mr. Lawrence Klein. At that time I was working directly with the technicians, and under my direction we did several things. We loaned him a U S West telephone set because we were concerned that his telephone set may be causing part of the problem.

We also was concerned about the drop that went from his house over to a shed that we thought could be causing a problem. Mr. Klein had indicated that he was not using the phone out at that location, so we went ahead and removed the drop from the house over to the shed.

We also thought there could possibly be a switch problem, so we changed his connection at the switch.

And if I could digress for a minute, that was the time when we were doing that was when Mr. Milton Klein experienced problems, and I believe that was August 18th. And so he called in a trouble report that day, but that was us working on the line.

Q. Who was working on the line on August?

A. The technician and myself.

Q. So that was part of the problem because you were working on the line that day?

A. Right. We were working on the central office in the connections for the carrier that serves Mr. Milton Klein. Again, at this point we did not know what was causing the problem at Mr. Lawrence Klein's home but we wanted to rule out the possibility of it being a switch-related problem. So we were making some modifications on that central office connections. We also on that day moved Mr. Lawrence Klein to a different channel within the same carrier system just to make sure that it wasn't a carrier problem.

Q. Did you finally clear the problem with Mr. Klein, Lawrence Klein?

A. Yes, I believe we did.

Q. Well, in your last paragraph of your report of August 31st you say to the Commission, "It's my recommendation the complaint of Lawrence Klein remain open until it's demonstrated the current fix is permanent."

After you wrote the August 31st letter, what has been the situation with Lawrence Klein's line as far as you know?

A. According to the trouble reports that's been filed, there's only been one trouble report, that was

October 6, indicating that there was a hum on the line. Other than that, the service from our records would appear to be that it was in standards and not causing any problems.

Q. What about the Whitings that you also identified on your August 31st letter to the Commission?

A. We were able to correct the problem that existed at that time on the Whitings. We were -- we replaced a channel card at their remote terminal near their home. That appeared to correct the problem but the problem reappeared. We did additional work on that line. We were able to bring it into standards. And to the best of my knowledge there's been no ongoing problems with their service.

Q. On August 31st in your letter, Exhibit 7, you detail the engineering standard tests that were done on their lines; is that correct?

A. Yes, I did.

Q. And you did testing on not only the complainants' lines, but who else are the people listed on that chart in the middle of Exhibit 7?

A. What we did at the time that I was working with the technician to test the service for those individuals who had filed complaints, we also went

throughout the immediate area, immediate area being several miles in each direction, and I directed the technician to test at each house that we could see or knew about, recognizing that a lot of people are somewhat distant from the road. But we tried to identify as many physical residences as we could and we did testing at that location.

Part of the tests we were able to have an automatic number identification test done which tells us what phone number is. I later matched up the phone numbers with the names, because we didn't always know whose home we were at.

And then I put all of that data into a chart which was included in this memo, which demonstrated that for the current, that the current was adequate to meet standards in every case, that the loss reading on the line met standards and also the noise on the line met standards for each of these people. There was a total of 15 different phone numbers or lines that we tested.

Q. And you've testified before about the method of testing and what these standards mean. What was your conclusion as a result of those tests conducted on Wednesday, August 25?

A. At this point when we did the tests, the

services were meeting standards and we were not aware of any additional work that would need to be done other than the work that I had specified that we had to follow up on.

Q. And is all the work that you informed the Commission that was going to be done, has it been done?

A. Yes, it has.

Q. What is your opinion as to the status of the voice grade service to the complainants in this docket?

A. My opinion is that we're meeting standards. Lawrence Klein has indicated there's been some ongoing problems. I've talked to the technician this morning, and his analysis and testing the line --

MR. HOSECK: Objection. This is hearsay.

MS. WIEST: Sustained.

Q. Well, has there been any reports other than what Mr. Klein has reported about his service other than the one report?

A. Not that I know of.

Q. Have you checked with the technicians to see if there's some reports that might have been made that aren't in the record keeping system?

A. Yes. I talked to the technician this morning. He was only aware of one report.

MR. HOSECK: Excuse me, this is hearsay

again.

MR. WELK: You can't testify as to what he said. I'll just ask have you been made aware of any other reports other than the one single report in our records?

A. No, none.

Q. Now let's talk about, you know, the service on this line. I mean even though U S West expended a great deal of time and effort on and work, I mean is this service going to be perpetually good; that they're never going to have another problem with this service?

A. I don't think there's any service in the U S West network that we could say would be perpetually good and would never have a problem.

Q. Based on what has been done, the work out there, what's your opinion from an engineering standpoint in regard to the status of the facilities that serve these complainants?

A. I think the physical facilities, meaning the cable and the buried drops, are in good condition and shape; and we do not know of any additional cable problems out there. Certainly we cannot predict when gophers go through and eat cable. We did find some cable problems because of gophers and other rodents that have eaten the sheathe off the cable.

All of our tests indicate that we've identified all of those sections and we've replaced them. The electronics are all meeting standards and, to the best of our knowledge, the electronics are in good shape. But certainly if lightning should hit one of those pedestals it could knock the electronics out again.

Q. Let's talk about the equipment that the customer has on his or her premise. How does that affect the quality of the telephone call that one has with one another?

A. The circuit that the customer is using is made up of the U S West portion, which is our switch and our facilities out to the many network interface device at the customer's location. Beyond that you have the inside wiring and you also have the phone set which is part of the network. If the inside wiring or the phone itself is causing a problem, that will cause noise, static, dropped calls, errant rings. It could cause a lot of different types of problems.

Q. So when someone calls up and says I've got a problem on my line tomorrow, I mean it could be either a U S West problem or it could be a problem with the inside facilities, one you would have to investigate?

A. Correct.

Q. These complainants, do all of them have cordless phones?

A. I don't know what each individual family has in the way of phone sets. I do know from working with some of the customers that some of them have cordless phones, and I know that Mr. Lawrence Klein does have a cordless phone.

Q. So one would have to look at each situation if there is a complaint in the future as to what's occurred; is that correct?

A. Correct.

Q. I mean it wouldn't be fair to say that it was the cordless phone's problem or it wouldn't be fair to say it's a U S West problem. You would to have look at each individual situation?

A. That's correct.

MR. WELK: I have nothing further.

MS. WIEST: Mr. Hoseck.

CROSS-EXAMINATION

BY MR. HOSECK:

Q. Mr. Peters, when I refer to this situation here, I'm going to call it the Valentine Exchange, realizing that it's part of the Valentine Exchange that's here in South Dakota. Do we understand that?

A. Yes, I do.

Q. Are you representing to the Commission that the problems on this Valentine Exchange now have been solved?

A. Yes, I believe that they have been solved.

Q. And do you know why any of these problems occurred in August and September as have been demonstrated in Exhibits A and B?

A. I know some of the causes of those problems.

Q. Okay. Is there anything from your perspective that would explain why in the case of Milton and Sheryl that for instance since the 6th of September there have been no problems?

A. I think that the fact that there's been no problems with most of the customers, if not all of them, represents the fact that this service -- the network that provides this service is reliable network and it is providing good quality service.

Q. I don't think you answered my question. And that is can you tell the Commission why since the 6th of September in the case of Milton and Sheryl everything has worked fine?

A. Yes, because of all the work that we did since the beginning of the year.

Q. Okay. And with regard to Lawrence Klein, car you tell the Commission that since the 14th of

September why there has been at least an apparent working in the system as far as his phone is concerned?

A. Well, again, I think it reflects the quality of the work that we've done since the beginning of the year.

Q. Did you do any of this testing personally that you refer to in Exhibit 7?

A. I was with the technician. I let the technician run the test set, but I observed all of the tests that were done.

Q. And with regard to Evelyn Whiting, I believe you testified that the standards were met in her case, is that correct?

A. We found that we were meeting standards but there was some ongoing problems. And I know the technician worked on it, and I don't remember exactly what he found on it but there was some problems with, I think, one of the channel cards that was creating a problem, or power card. I don't remember which one it was.

Q. Do you know if that card was changed?

A. Yes, it was.

Q. Okay. Would that --

A. Previously we also had a problem with the bad splice on the new cable that we had put in. It had

gone open and was causing intermittent problems for her and some of her neighbors.

Q. Would these things that would have been done with regard to Mrs. Whiting have been done before or after the time that you did your testing as shown on Exhibit 7?

A. I believe that at the end of July, I think it was around the 25th of July, when we did the final tests that we determined that there was ongoing problems with Miss Whiting and Mr. Lawrence Klein. So some of that work was done right at the end of July and probably carried over into the first part of August.

Q. Okay. So the tests that are shown on Exhibit 7 really were not done until August 25th, is that correct?

A. Correct. I believe I did testing at the end of July, but then I went back and did additional testing at the end of August. So at the end of July we were meeting standard with everyone else.

Q. With regard to these standards on Exhibit 7, even if your company met these standards, what explains these problems that these people have still had with regard to noise on the line and chirping and things of that nature? In other words -- excuse me, that's a poorly worded question. Can the standards still be met

and those phenomena still occur? Let me put it that way.

A. Yes. Would you like an example?

Q. No, I think we have an example in the record.

MR. HOSECK: I have no further questions of this witness.

MS. WIEST: Do any of the complainants have any questions of Mr. Peters?

MR. MILTON KLEIN: I got a question about his testimony. You have stated --

MS. WIEST: Will it be in the form of a question to Mr. Peters?

MR. MILTON KLEIN: You stated something on the August 18th and stated that we'd had problems, and that conflicts with my records. My trouble report was on the --

A. Can you refer me to what you're looking at?

MR. MILTON KLEIN: I'm looking at my calendar. And my logs indicate my trouble report would have been on the 24th of August or 25th of August, and you stated something about the 18th of August.

A. Was that in my verbal testimony?

MR. MILTON KLEIN: Correct.

A. I don't remember what I said about the 18th

I believe I was out doing testing on the 25th of August. In fact, my memo on Exhibit 7, dated August 31st, I said testing of the service was conducted on Wednesday, August 25th, and that was with Michele Farris of the Commission staff. And I believe that was the day that we came out with the technician, and as you testified, Mr. Milton Klein, that was the morning that we told you that we had been doing some work on the switch which would have caused the noise on your line, which is what you had reported on August 25th.

MR. MILTON KLEIN: Okay. I believe you said something in your verbal testimony about the 18th, that you were working on the switch and caused that problem.

A. If I did, then I misspoke and was the 25th.

MS. WIEST: Any other questions from the complainants? Commissioners?

CHAIRMAN BURG: I have a couple. Can you give me what type of improvements and after the fact now all you have done, what type of improvements did you have to do to bring this up to the standards you had testified to?

A. We had substantial amount of cable and buried drops that we replaced. Some of it was done on a preventative basis. Some of it was done because we

found defects in the cable. For instance, I've talked about the gophers eating the cable sheathe. We found some sections where we had water in the cable, so we replaced a lot of cable along there. The rest of the cable we've tested out and all of it tests out good.

Obviously that will be an ongoing obligation to maintain the cable out there. We have gone through the carrier actually was not -- there wasn't a lot of work we had to do on the carrier itself. It was mostly cable work. But we did go through and do all the testing on the carrier and made sure everything was falling within range. There was some bad plugs that we replaced such as in the case of the Whittings. So I think that pretty much encompasses the work.

CHAIRMAN BURG: Excuse me, you indicated that you replaced some cards. How much of that did you have to do?

A. I don't have a quantity. Sometimes when you're doing work on carrier systems, you replace cards just to see if that is the problem. Because the fastest way to see if something clears is to put a new card in. If it clears, you know you have a bad card. If it turns out it's not a bad card, then you re-use that card because it's still good. So I really don't know how many changes we made that was a result of

actually having bad cards.

CHAIRMAN BURG: I know the memos you gave us indicate the amounts of some of the cable that was put in, but just a ball park figure, do you have any idea how many feet or whatever of cable were actually replaced?

A. Cable? To be honest with you, I would have to go back through and add up what I've reported. I know there was times when I reported, you know, large sections, thousands of feet, and I would guess that the total amount that we've replaced may be in the 15 to 20,000 feet.

CHAIRMAN BURG: Okay. A little different line, and you may or may not know this, the answers to these. Has an agreement been made to sell Valentine Exchange?

A. That's not an area that I personally work in. It's my understanding, just from things I've heard in the company, that Citizens has agreed to buy the Valentine Exchange, along with a number of other exchanges, and I believe that that is in the process of going before the Commission.

CHAIRMAN BURG: And you don't know the status of that sale or the timing of any of these events?

A. I really don't.

CHAIRMAN BURG: And my last question is a lot of references and questions have been made about cordless phones. Do cordless phones in general cause some problems that may be blamed on the system and yet it's that technology?

A. I appreciate that question because I've done extensive amount of work throughout South Dakota, and wherever I go and I talk to techniciane, that is their biggest complaint, that cordless phones are a predominant cause of trouble as far as noise and other problems.

And it's interesting that when I talk to these technicians that they don't know each other and they're not talking with each other and yet I hear the same story in different areas of the state. So it is my opinion that cordless phones, essentially lower-priced cordless phones, are a predominant problem.

CHAIRMAN BURG: Is there a lot of variation in the quality of the cordless phones? Is that one of the indicators?

A. There is. And there's also a lot of variation in the quality of phone sets in general, even wired phones. There's the K-Mart special where you can go down and buy a phone for $9.99, and those phones

have very little of the electronics inside that the old Bell system phones used to put in to ensure the quality.

And so any time you have a low-quality phone, whether it's cordless or your wireline phone is going to cause problems.

CHAIRMAN BURG: That's all I have.

COMMISSIONER SCHOENFELDER: Will you look at your Exhibit 7? I believe you have Harold Whitney. Is that Harold Whiting? Is that the number for the Whitings?

MR. WELK: Which page are you on?

COMMISSIONER SCHOENFELDER: I'm sorry, in the chart it says Harold Whitney.

A. Yes, that's probably Whiting.

COMMISSIONER SCHOENFELDER: And the rest is about Harold Whiting's phone, and I wanted to make sure we were talking about the same person. I think it's probably a typo.

A. To the best of my knowledge, I believe that her husband's name is Harold, and I don't know of a Whitney out there so I believe that it is Whiting.

CHAIRMAN BURG: We should be able to check that with the phone number.

COMMISSIONER SCHOENFELDER: I just thought

there might be an error there.

A. I appreciate you pointing that out.

COMMISSIONER SCHOENFELDER: Since I haven't seen this memo before, bear with me. But you talk about the school and in the beginning there were people here from the school that testified at the first hearing. And a major concern of mine are those schools, especially in the wintertime.

A. Right.

COMMISSIONER SCHOENFELDER: So your testimony seems to say they should have as good as reliable service as anybody else in South Dakota if they have to call if they have kids picked up during blizzards or whatever?

A. Yes.

COMMISSIONER SCHOENFELDER: And I see that you seem to indicate they've gone to some kind of a wireless service for their Internet that hooks them to -- must be the Todd Schools?

A. I was out there, and I would also mention to you that Michele Farris was out there with me. She also talked to Jan, the school teacher, so she can verify what I'm about to tell you.

But what I was told by this school teacher -- I don't know her last name, but her first name was Jan,

was that the school district had decided to go to a wireless connection for Internet. She also told me that she had seen a significant improvement in the voice grade service and that they had not had any ongoing problems like the Kleins.

She had been keeping a listing of when they had problems. It was tacked up on the board. She showed that to Michele and myself, and you could see the reports drop off as you got into the later spring time. And she indicated that she had not been having problems this fall.

COMMISSIONER SCHOENFELDER: Of course in the summer we wouldn't have known about the schools. But there were three schools, you have them all listed as Klein Schools, are those the three separate rural education centers?

A. Those are the three lines to the Klein School.

COMMISSIONER SCHOENFELDER: Did you visit with anybody in the other two schools?

A. No. The other schools are not on this route so we did not work with them.

COMMISSIONER SCHOENFELDER: Okay. I can't remember the names of those schools. But they were at one time they had some kind of Internet service because

I think in the first hearing you said you were a little surprised that they had as good as service as what they did on the Internet, that they could get on at all.

A. Yes, your memory is very good. I did say that.

COMMISSIONER SCHOENFELDER: I worry about these schools.

A. And they still are using the phone line for Internet today, as Mr. Milton Klein testified he is. And as he testified, he is able to get onto the Internet. We don't warrant that this line is for that purpose, but they are able to do that.

I believe, to the best of my recollection, that Jan had indicated that she had seen some improvement on the Internet, but that was not a major focus when I talked to her after she told me that they were going to go up to the wireless.

COMMISSIONER SCHOENFELDER: Okay. Let's -- and I haven't gone over this completely, but I think you, in your testimony, you have quite a bit. When you were talking about Mr. Lawrence Klein's phone and you said you changed his connection to the switch to make sure the problem was not switch-related?

A. Correct.

COMMISSIONER SCHOENFELDER: Then I have a

question to follow up on that. If when you first answer the phone on the first ring and there's no one there and then it rings again, I mean if you wait for two rings and then -- I don't know how to explain it. But is that a switch? Could that be a -- it's just a function of the switch, that the connection hasn't quite made the ring? I mean could that be causing the ringing and then no one there if they answer on the first ring? And I'm saying it badly, I know.

A. I think I know what you mean. To the best of my knowledge, that is not a switch-related problem. The switch problem that we were most concerned about was no dial tone, and we were afraid that the switch connection was staying open after he hung up his phone.

So we wanted to eliminate that possibility. So that's why we made the rearrangement of the switch. To the best of my knowledge, that did not affect -- that did not diminish the particular type of problems that he was having, so to the best of my knowledge, we did not have a switch problem.

COMMISSIONER SCHOENFELDER: I think that's all I have. Thank you.

CHAIRMAN BURG: I have one other. I keep hearing that automatic dialers with sellers and that

cause a problem and you'll get a ring and you pick it up because all of the -- what do I want to call it -- people that's doing the calling are busy, telemarketers are busy. Is that accurate? Does that happen sometimes?

Is that why I have the same thing happen in my home with probably really no phone problem but you'll have a ring, you pick it up and it's dial tone? I've been told that and I'm just asking if that's accurate?

A. From a technical perspective, if any call is made to another phone and then the calling party disconnects, you may be hearing the ring and picking it up at the time that they're disconnecting and you're going to get a dead, you know, condition. That can happen whether it's automatic dialer or somebody just dialing.

CHAIRMAN BURG: Right. But the automatic dialer, I mean, it is exacerbated to the degree that a lot of companies are doing it. It's a way to get more efficiency out of the caller. Is that accurate? So we're having that occur because that situation actually does happen? I mean this is not a false statement that I've heard?

A. The problem with automatic dialers is they

can be programmed to try for a certain period of time, you know, for five seconds or eight seconds or whatever, or to try for certain number of rings. And if someone doesn't pick it up in that period of time, then it will automatically disconnect and goes to the next register in for doing the automatic calling. So I think that could exasperate the problems because you may answer your phone on the fifth ring and it may be hanging up after the fourth.

CHAIRMAN BURG: It usually happens to me after a couple rings, it takes that long to get there. But what I've been told is that the telemarketers -- if all the telemarketers are busy, it will drop that off because there's nobody there to answer it.

A. Yes, oh, yes.

CHAIRMAN BURG: That's the point I was making.

A. Yes. I haven't investigated the telemarketers and how they operate in any great detail, but that does make sense.

CHAIRMAN BURG: And so I just -- I mean sometimes when we have this problem of ringing, we're all very frustrated, what's wrong with the system because it keeps getting a ring and nobody there when I answer the phone. And I've been told it's not the

phone system's problem, it's many times telemarketers or something like that. That's all I have.

MS. WIEST: On Exhibit 7 in objective standards was there a previous testing where these standards show an improvement over previous testing?

A. I don't recall providing test results earlier in the process. So I couldn't tell you what the change was on an individual service-by-service basis.

MR. WELK: You've got results on Exhibit 6.

A. Yeah, Exhibit 6 was approximately three weeks earlier when we did testing at the end of the July and I reported on August 5th. Maybe it was about four weeks earlier. But I think the question is, if I understood it correctly, was more along the lines of whether or not there was test results from prior to the time we started doing the work.

MS. WIEST: Right.

A. And I believe, to the best of my recollection, that we do not have those test results.

MS. WIEST: And I'm just curious why do you have unknown names for telephone numbers?

A. Because when I -- we can do an automatic number identification, which is a mechanical database where if you know the number, you can call in and it will tell you what number you're calling from.

I then went to the phone book and tried to match up these phone numbers with names, and I was unable to find that particular phone number so I don't know whose residence I was at because there was no name on the box or on the house.

MS. WIEST: Okay. Do you have any redirect, Mr. Welk?

MR. WELK: Just one question in answer to a question Mr. Hoseck asked.

REDIRECT EXAMINATION

BY MR. WELK:

Q. He asked a question if you met the engineering standards on the design of the facilities. Is there an explanation as to why some of the problems that Lawrence described today and Milton could still occur?

A. There is. Certainly as I indicated earlier that, you know, we can't guarantee that lightning or other factors aren't going to cause problems. We can also continue to have problems if there is a problem with the inside wiring of the residence or if there's problems with the phone set itself.

For instance, in the case of Lawrence Klein, I think there's maybe some disagreement as to what his problem has been. But it is our belief that he does

have a problem with his cordless phone and that that has introduced a number of problems.

And to illustrate why I believe that to be true, the first Mrs. Klein testified this afternoon indicated the only problem she had was when she was calling his residence. Mr. Milton Klein then went through his list -- and is that available, his list of trouble? His first comment on 8/8 was that they tried to call the Kleins, being Jo Klein, which is Lawrence Klein's wife, that that was a problem. Again they tried later in the day and that was a problem. 8/1 they tried to call and it was same noise problem.

So when you look at this in the proper perspective, many of the problems that the other residences of this area are complaining about could all be traced back to the Lawrence Klein residence. We have tested it. The standards are being met.

When we provided him with one of our phones, he did not have a problem. He testified to that today. We had a technician that was out there. I don't know what the date was. But when I talked to him today, he said that was the only problem that he's been out on and he traced it back to the phone nets themselves.

So, to the best of our knowledge, there is

not a problem with the system. There may be a problem with his individual phone sets.

MS. WIEST: I'll give you an opportunity. I'm sorry, Mr. Klein, can you just wait a minute?

MR. WELK: I don't have any further questions.

MS. WIEST: Do you have any further cross, Mr. Hoseck?

MR. HOSECK: Yeah, in light of this last bit of testimony here.

RECROSS-EXAMINATION

BY MR. HOSECK:

Q. Mr. Peters, I would like to know if you're telling the Commission that it's your professional opinion that Lawrence Klein's wireless phone is the cause of all his problems?

A. To the best of our ability to diagnose a problem, that's the only thing we've been able to figure out as to why he has had problems. Again, I believe, according to his own testimony, he has not had ongoing problems since September 14th. But when we have tested his service in the past, that's what we traced it back to.

And, again, based on the fact that many of the other problems the other residents in that area had

has been when they tried to call him, that is what we believe to be the case.

We certainly are not saying we're unwilling to continue to look into that problem though.

Q. If that's the case, how do you explain the fact that ever since the 14th of September the problem has ceased?

A. When you have a phone set that is introducing intermittent problems, cordless phones are particularly bad because of the batteries. If they're not charged up appropriately or if they become weak and they don't hold a charge, they will introduce problems into the network. If it is being kept on a charger it may not be perpetuating that problem but it could if the battery gets weak again.

Q. Did you hear Mr. Lawrence Klein testify that he's on the plan that U S West has that maintains his inside wiring?

A. Yes, I did.

Q. As any part of your testing did you test the inside wiring in his house?

A. Yes. When I was out there with a technician I know we did some investigation of his wire. We did find a defect where the inside wire comes out of the house and then to our connection box, what we call the

Internet device -- not Internet, network interface device, and we did re-splice or cut back the bad section and we did re-wire that.

The technicians have done other testing on his inside wiring, and we don't believe the wire itself is a problem. But, again, we only go to the phone jacks. We don't take responsibility for the phone sets.

Q. When was this repair work done on his inside wiring?

A. When I was there. I can't remember if that was the end of July or the end of August. That's when we did the work I just described. I believe that there's been testing on his inside wiring since then. I believe that that's what I heard Mr. Lawrence Klein testify to today.

MR. HOSECK: I have no further questions.

MS. WIEST: Do any of the complainants have any questions of Mr. Peters?

MR. LAWRENCE KLEIN: I had one on that. On them dates that you're mentioning there, I was not at home.

A. Which dates, sir, was that?

MR. LAWRENCE KLEIN: I mean October such and such there's three dates mentioned. I think I was

absent all three days.

MR. WELK: Is that the date of the report you mean, sir?

MR. LAWRENCE KLEIN: It's the one Milton turned in, I think, when they tried to call us at our home.

MR. PETERS: Is that August? I'm sorry.

MR. MILTON KLEIN: You weren't home. That's why I called Vickie. She told us you weren't home. I didn't know that.

MS. WIEST: Any of you had any questions of Mr. Peters from anyone?

MR. LAWRENCE KLEIN: I had one more and that is you mention the fact that you had switches to a different line on this Internet or certain party lines or something like that. Now, you've never changed that. I mean once you switched us, you never changed us back?

A. I'm not sure what the question was.

MR. LAWRENCE KLEIN: You said that you had changed a line or something within.

A. Channel.

MR. LAWRENCE KLEIN: Channel, and you've never changed that back. We still got the same line you switched us to?

A. Right.

MR. LAWRENCE KLEIN: I mean we haven't had problems since we've switched to that line, very little anyway.

A. Yeah. I don't remember what day we did that. It was -- I don't know if that was at the end of July or the end of August. It may have been.

MR. LAWRENCE KLEIN: I think it was the end of August is what I think. I think it was about the same time Michele was out there?

A. Yeah, I don't remember what day we did that.

COMMISSIONER NELSON: Could you check? Is there a record, a file, a trouble report? Certainly you log where you are every day.

A. Actually there's the log would be for the trouble reports that we actually have on the record. In July and August we were up there every day doing th work, so I don't believe there is a record, but I cou go back and see what I could find.

COMMISSIONER NELSON: What I'm interested i knowing though after you switched him over to the new line, if that for the most part eliminated his problem. Because there's a big difference in my mind I'm curious if it really is his phone or it's all the other things you did.

Because your testimony sort of leaves with the impression that most of Mr. Klein, Lawrence Klein's problems, were because he had poor quality or not very working portable phone when you did a lot of other things that you know solved his problem. I mean did you replace cable?

A. All of the cable replacement that we did was in prior to probably prior to the first part of July. So anything that we did after that -- I mean any of these trouble reports that's being reported here was after the time that we did cable replacement.

We did have a trouble report on October 4th and I did talk to the technician about that today and he traced it back to trouble with inside phone.

COMMISSIONER NELSON: Are you trying to tell me, though, that -- do you want me to believe that all of Mr. Klein, Lawrence Klein's problems, would have if you've done none of the other things, if you had not replaced the little part inside wiring that you said you replaced, if you hadn't replaced any cable, if you hadn't switched any of the lines, that even if he got better quality -- even your model that you gave him, the model of phone, that he would have had no problems?

A. No, that isn't what I'm testifying to. And going back to my Exhibit 7, I think I've said that --

clearly, that at this point in time we had done all of the work that we've done. Certainly that was improving his service.

There was some ongoing complaints about his service after that point in time, and it appears that at least part of it, and I'm not saying all of it, may have been caused by his phone set itself. Because when we took his phones off line and we give him a loaner phone, he did not experience trouble.

COMMISSIONER NELSON: In my mind I was just trying to clarify since your testimony here today is later than your memo, if you now reached the conclusion that it was his head set or his phone set versus any of the other things that you've done to eliminate the problem.

A. No. Certainly the work that U S West has done since the beginning of the year up into and including August certainly improved the phone service, not only for Mr. Lawrence Klein but all of the people that live up in that area. There has been some report of some ongoing problems. Certainly not to the same extent that existed previously.

But what I'm testifying to is the fact that some of those ongoing problems could be related to the cordless phone.

COMMISSIONER NELSON: Do you believe that those ongoing -- some of those problems that were ongoing are going to continue to be there?

A. Again, I have no way of knowing what is going on with his phone set.

COMMISSIONER NELSON: Well, I'm talking now broader that than, Mr. Lawrence Klein.

A. Oh, okay. I think in any scenario, whether we talk about downtown Pierre or, you know, any place that we operate, there's always going to be problems just by virtue of the fact that you've got so many network elements between switches and cables and carrier systems and you got the weather to contend with and lightning and all these things.

Is the service going to be perfect? Absolutely not, not for these people or anyone else. But I think the phone service will be reliable. I don't think we're going to have the type of problems, the magnitude of problems, that we were experiencing a year ago.

I think we have built a reliable system out there, and I think we are providing good quality service, and I think we're going to be able to maintain providing good quality service. It will take from time to time for us to go out and visit these areas and

continue to maintain it.

COMMISSIONER NELSON: Looking at your map of August, September, and October, after like the, let's say the first part of October there don't seem to be any problems that happened be more reflective of what most people experience.

Do you think now all the work is completed that I should look forward to seeing that kind of performance in the next few months in the next -- I mean everybody can have a problem now and then.

A. Right.

COMMISSIONER NELSON: But these people seem to have ongoing repeated problems.

A. I think they had ongoing repeated problems up to the time that we completed our work. Again, I don't think Milton Klein reported some ongoing problems. I think that was really by virtue of the fact they were calling Lawrence. We know we had some problems with Lawrence's service into August. We believe it's fixed. It appears from his trouble reports that he has not had substantial problems, although he had a couple in September.

But for everyone who has testified today, there has been no problems in October and almost negligible problems in September, so I think we have a

good two solid months here of them not experiencing the kind of problems they were experiencing before. So I think we can say with reliability that the service is meeting standards and the network is reliable.

COMMISSIONER NELSON: Right. Some of their problems -- most of their problems did seem to come when there was thawing and freezing, moisture, those kinds of things, and we really haven't had an opportunity to experience that kind of weather since you've completed your work. Would you not agree?

A. I would agree that we have not had the severe weather so far this fall that we typically would experience during a late fall, winter, early spring time frame.

COMMISSIONER NELSON: So it might be premature to assume we've solved all the problems.

A. I don't know that I would necessarily agree with that from this standpoint that, you know, problems can occur not only from thawing and freezing, but also from extreme heat. Certainly we will continue to look at and monitor the service that's out there, and if we have any indication that additional work needs to be done, or if we have individual cases of trouble, we're certainly going to be investigating those.

But we have this type of carrier system in

other areas. We have not had the magnitude of these problems. They work through the winter. Right now we have all of the cables in good shape. The carrier systems are in good shape. I would have no reason to expect we're going to have problems as we go into the winter months.

COMMISSIONER NELSON: We also haven't had any extreme heat either since then since you repaired the bulk of it.

A. That's true.

COMMISSIONER NELSON: So?

A. I have to take your word for it. I don't know about Pierre here.

COMMISSIONER NELSON: We really haven't. But then my other question is what kind of carrier system is that?

A. That is an Anaconda.

COMMISSIONER NELSON: Thank you.

MS. WIEST: Any other questions of this witness?

CHAIRMAN BURG: Just one. What was the date of what the basic the separation where you said the splice kind of gave way? When did you repair that? That's what I should ask.

A. I don't remember exactly. I know that was an

issue that we first became aware of that neighbors were having problems up there when Mr. Milton Klein testified at one of the hearings, and I don't remember the date of the hearing. So it would have been first within a few days after that.

CHAIRMAN BURG: Would that particular [illegible] problem have affected all of these consumers?

A. No. It was affecting, as I recall, just three of the residences up there.

COMMISSIONER SCHOENFELDER: I have to follow up on one for my own information. You just told Commissioner Nelson that was an Anaconda carrier system. I thought that this was a SLC 8 on size core?

A. Size core is another carrier system we have also.

COMMISSIONER SCHOENFELDER: I thought that is what this was.

A. No, this is not size core.

COMMISSIONER SCHOENFELDER: I thought the transcript before said it was size core. Correct me if I'm wrong. I just need to know.

A. I think at one time I testified that we had size core in the exchange and that we may be over time converting some of this area to size core, but this right now is not size core.

COMMISSIONER SCHOENFELDER: This is Anaconda carrier then?

A. Yeah. I've been involved in so many parts of the state, I believe it's Anaconda and I would have to go back and look at my records to make sure.

COMMISSIONER SCHOENFELDER: Would you let me know that off the record afterwards, please, just for my own information?

A. You bet. Is it appropriate to contact you directly?

COMMISSIONER SCHOENFELDER: You can about this because it's not going to affect my decision about this.

MS. WIEST: Any other questions of this witness?

MS. FIGERT: Is it appropriate to ask Mr. Peters or the Commissioners how to handle future complaints if we have any?

MS. WIEST: You can ask Mr. Peters.

MS. FIGERT: Just report them? Record them and report them?

A. Yes.

MS. FIGERT: If we get rain, which I hope we do, if you would quit using cherry and strawberry flavor wiring, throw the gophers off a little bit, or

something?

A. Yes, we very much would like to get trouble reports. We appreciate the fact that many people -- and I find this to be true throughout the state, wherever I go, that people are so nice they don't like to report trouble. Unfortunately, it doesn't give us an opportunity to go out and fix the problem. So we need to have individual cases of trouble reported so that we can get on top of it early in the game.

MS. FIGERT: Early in the game. That's what you said, early in the game. We're not going to have to go through a complaint system again? I don't know what your attitude is whether this is fixed now and we can go on to Hayti or Hot Springs someplace and do theirs, or whether there will be some attention to our complaints, real attention?

A. I have worked with the supervisor for this area. He is very much supportive of the fact that these problems should never have occurred, and he's going to stay on top of it and make sure it doesn't recur. And I certainly support that position as well.

So that's why we need to get the reports early on so that we can identify what is happening to the services out there and whether or not it's indicative of a problem only for that one service or

whether it's becoming more widespread.

MS. FIGERT: Seriously, is there wiring available to your company that would not be so attractive to vermin?

A. There are. The cable, it's constantly -- technology is constantly undergoing changes.

MS. FIGERT: Sure.

A. Certainly cable manufactured in 1999 is go to contain chemicals that is more -- causes the plas to be more distasteful to the rodents than the cable that was placed at that point in time when we originally placed it. So the sections we've already replaced probably are less likely for the gophers an rodents to get into it.

MS. FIGERT: You still got old cable out there though, don't you, in places?

A. Yes. And none of the newer cable is 100 percent resistant. You know, you're going to get so gopher out there that doesn't have any taste buds an don't care.

MS. FIGERT: You make your best effort and from there. I understand that. I just hope my Internet service is going to work. I don't want to a monthly fee and then be off half the time, you kn

A. Right. And as always, if you do find that

you are without service, Colleen is very courteous for giving credit for that.

MS. WIEST: Mr. Klein.

MR. LAWRENCE KLEIN: Mr. Peters, how do you explain the fact that you changed this line? Now, I mean, how do you explain that improves our service if we've got bad service in our house?

A. Oftentimes problems that a customer experiences is a multitude of different things, and it may not be one source that is causing it. As I indicated earlier, we certainly recognize that the carrier system and the cable was causing a vast amount of the problem that you and your neighbors were experiencing.

That doesn't negate the fact that there is times when it's possible that a particular problem could be caused by something else such as a bad phone. For instance, we find that with cordless phones, if the battery is not holding a charge, sometimes it will create stray current which will cause chirping on the line or cause a phone to ring and there's nobody there. That is not the only thing that could cause that. It could be stray current on our carrier system that is getting onto the phone as well.

So we're not saying it's always going to be

bad phone. We're just saying that that can't be -- we can't neglect the fact that some problems can be caused by inside wiring problems or bad phones.

MR. LAWRENCE KLEIN: Would you feel safe in putting us back on the same line we was on?

A. You're actually on the same carrier system you were on before. You're just on a different set of frequencies within that carrier.

MR. LAWRENCE KLEIN: Would you feel safe in putting us back on the other frequency?

A. Yes, I would.

MR. LAWRENCE KLEIN: I don't want it, but I'm satisfied with what we got.

MS. WIEST: Any other questions?

MR. LAWRENCE KLEIN: I'm not so sure it wouldn't be something any different.

MS. WIEST: Any other questions of this witness from anyone?

If not, U S West, do you have any other witnesses?

MR. WELK: No, we do not.

MS. WIEST: Mr. Hoseck, do you have any rebuttal witnesses?

MR. HOSECK: No.

MS. WIEST: Do the complainants have any

further testimony that they would like to give at this time?

CHAIRMAN BURG: I have a question. I'd like to ask for each one of the complainants is the aim of this was to get your phone system. I really appreciate the process you used. And the question that I have, will preface it with the fact that if you ever have any more problems, be sure to contact us. We're here to serve you. We will certainly be able to do it.

But do you find at this point any reason why we should not consider the burden upon U S West satisfied for the time being and close these dockets? And I guess I'll ask each one of you that.

Margaret, do you have any --

MS. FIGERT: I appreciate you're saying for the time being.

CHAIRMAN BURG: I definitely mean that.

MS. FIGERT: I can't really -- I don't know.

CHAIRMAN BURG: Our intent is not to keep dockets hanging open and open and open. We can open another one if you have a recurring problem.

A. We would go through U S West first with our complaint and if we did not receive satisfactory responses, then we would re-file and open a new docket with you? Is that correct?

CHAIRMAN BURG: Right. But the purpose of this hearing and this is to see if what we required at this time is satisfied. And I'm asking you is there any reason do you not feel that it's satisfied so we can close the dockets?

MS. FIGERT: I think you can close my docket for this set. I don't know the weather this winter.

CHAIRMAN BURG: I'd ask JoAnn the same thing.

MS. JOANN KLEIN: Yes.

CHAIRMAN BURG: And Lawrence?

MR. LAWRENCE KLEIN: Yes.

CHAIRMAN BURG: And then Milton and Sheryl?

MS. SHERYL KLEIN: I say yes but with the qualified, A, for the time being, and, B, I don't want to have to go through two years of this again next time the problems surface. That's totally unreasonable.

CHAIRMAN BURG: Certainly. I recognize that. I've always been amazed how patient you were not to contact us sooner, or how patient people are in not coming to us when they've had recurring and recurring and recurring problems.

MS. FIGERT: Maybe it's because the technicians are good looking and they come out and see us so often. I'm never home when they're there so I

don't know what they look like.

CHAIRMAN BURG: You've got to get worse looking technicians or something.

MS. WIEST: Are there any closing statements then?

MR. HOSECK: Yes, I would like to make one.

MS. WIEST: Go ahead.

MR. HOSECK: Mr. Chairman, Members of the Commission: What I'm passing around is not evidence, it's argument. And what I have done is as I see the issues before the Commission today are, one, whether or not the quality of service has been reliable and adequate since July 30, 1999; and, secondly, if it hasn't been, or it has been, what action the Commission should take.

What this exhibit is intended to do is to summarize for you the time frame that we've been working in here and that these people have experienced in the complaint process as to when they first had a problem and as to what I would submit is very generous time frames that U S West has had to resolve these problems.

And I think that this bit of information speaks for itself in that some of these people had problems going back essentially starting the calendar

year 1998. Now, as I said, this speaks for itself.

The issue before the Commission, per your order, is what's happened since July 30th of 1999 and has it been reliable and adequate.

As to reliability and adequacy, I would ask the Commission to consider the testimony of the parties here, primarily Lawrence Klein and Milton and Sheryl Klein, who have had the problems that have persisted. These problems are put forth on the two exhibits which are essentially the calendars that indicate that the Commission-imposed deadline of July 30 was not met. That's the first thing that he wants proven. And, secondly, whether or not there has been reliable and adequate service.

These people have testified as to what they had experienced. I would submit to you that Mr. Peters' testimony about the phone set, especially in Mr. Lawrence Klein's case, as that being the cause is speculative at best.

Now, this brings us to the question of what should the Commission do. What action should the Commission take? By order June 15, 1999, you set this July 30 deadline. The evidence indicates that that has not been met. I would ask you to look at SDCL 49-31-38, which is your authority for fining for

failure to comply with a lawful order. The law provides for this civil fine of not less than $200, no more than $1,000.

I think that the evidence in front of you shows that at least since September 6th in the case of Sheryl and Milton Klein, they have had good service, but prior to that time they have not had reliable service because the problems cropped up. The problems came back.

And as for Mr. Lawrence Klein, the Exhibit A shows that it goes through September 14 where the reliability factor is not there. And if my recollection is correct, there was testimony by Lawrence that October 6th he had another occurrence of a problem.

Now, in each of these cases you have set an order in each of these cases are, as I read them, to be considered separately. And so with that statute in mind, I think that there is ample evidence in the record for a fine to be imposed against U S West for service which has really been inadequate as the evidence has shown for a couple years. This is not reasonable. And I would ask that a fine be imposed within those statutory limits. Thank you.

MS. WIEST: Do you have anything, Mr. Weis?

MR. WELK: Yes, I do. I'm sorry that these people had to complain to get the service, but I can tell you since Mr. Peters has been involved in this deal, the record is undisputed as to the amount of effort, time, money, that U S West has worked on these problems.

These people have not asked for money. They asked for good service. They're entitled to good service, and they've got it. Now, apparently Mr. Hoseck didn't listen to the four people that went around the room and said they're satisfied with the service.

The only evidence that we had today was Lawrence Klein and a couple of instances from Milton Klein. Now, we're not going to sit here and say it was all Lawrence Klein's phone problem or not, but the issue clearly and the evidence is that most of the other people, there weren't any problems whatsoever.

Mr. Peters was very up front with the Commission. It's unfortunate that your executive director didn't give you these reports because you were being informed as the progress occurred about what was going on.

And Mr. Peters informed you that Lawrence Klein had an issue, they went out and eliminated it. I

mean it was clear to me that from the testimony of Mr. Peters, based upon engineering and testing, that Mr. Lawrence Klein has a problem with his phone. Is it all his phone? I don't think anybody can say that.

But the issue you have imposing a fine is has U S West tried to comply with your order and have they provided good reliable service? And there isn't any one of these people out here who said they didn't respond; that substantial amounts of money and manpower have not been expended in their efforts, and I think it would be totally inappropriate.

Based on this record, U S West has gone out of its way to help these people. We're not going to have perfect service. I wish Mr. Hoseck could go out and fix the systems himself. He would find out these systems are, because they're electronic in nature, they're not going to be perfect.

But I think that the company's example and conduct in this instance has been responsive and they've expended a lot of time and effort, and I think a fine would be totally inappropriate based on the evidence that you've heard today on what they've done. That's all I have.

MS. WIEST: Anything from the complainants?

If not, did the Commissioners want to close

the hearing at this time?

CHAIRMAN BURG: Yes. I think we'll take it under advisement.

MS. WIEST: The hearing will be closed. I'm sorry, Mr. Peters, do you have something?

MR. PETERS: Could I add a couple final comments because unfortunately the reports were not provided to the Commissioners on a regular basis?

But I would ask you to look at my reports because no work was done to improve Milton Klein's service after July 30. Everything was done and completed for him, Margaret Figert, and JoAnn Klein. We did find some new problems with Lawrence Klein. That work was done into the August time frame. But I do want to make it clear that we did not continue to have to do work on the other three complainants after July 30.

MS. WIEST: The hearing is closed.

MR. HOSECK: May I comment?

MS. WIEST: Go ahead.

MR. HOSECK: I think the Commission should understand, and I'm sure Mr. Welk does, that this is a contested case. And the fact that reports were sent in by a witness to be sent to Commissioners is totally outside the realm of a contested case hearing. That's

why it was put into evidence today. That's why they were not furnished to the Commissioners prior to this time. And I think it is important that U S West raises this as some sort of impropriety on the part of staff.

MS. WIEST: If nothing else, that will close the hearing.

(THE HEARING CONCLUDED AT 3:18 P.M.)

STATE OF SOUTH DAKOTA)
)
COUNTY OF HUGHES)

I, LORI J. GRODE, Registered Merit Reporter and Notary Public in and for the State of South Dakota:

DO HEREBY CERTIFY that the above hearing, pages 1 through 94, inclusive, was recorded stenographically by me and reduced to typewriting.

I FURTHER CERTIFY that the foregoing transcript of the said hearing is a true and correct transcript of the stenographic notes at the time and place specified hereinbefore.

I FURTHER CERTIFY that I am not a relative or employee or attorney or counsel of any of the parties, nor a relative or employee of such attorney or counsel, or financially interested directly or indirectly in this action.

IN WITNESS WHEREOF, I have hereunto set my hand and seal of office at Pierre, South Dakota, this 9th day of November 1999.

Lori J. Grode, RMR, RPR

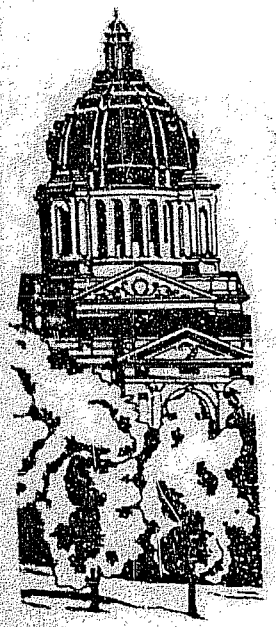

South Dakota Public Utilities Commission

State Capitol Building, 500 East Capitol Avenue, Pierre, South Dakota 57501-5070

November 12, 1999

Mr. William Bullard, Jr.
Executive Director
South Dakota Public Utilities Commission
500 East Capitol
Pierre, SD 57501

Re: Dockets TC98-183, 184, 199 and 212

Dear Mr. Bullard:

Please file in this docket the following correction to the transcript of the hearing in these matters which was held on November 4, 1999:

On page 94, line 3, the word "important" should be stricken and the word "atrocious" should be substituted therefor. The sentence should thus read: "And I think it is atrocious that U S WEST raises this as some sort of impropriety on the part of staff." That was my statement.

Very truly yours,

Camron Hoseck
Staff Attorney

CH:dk

cc: Mr. Thomas J. Welk
Ms. Sheryl L. Klein
Ms. JoAnn C. Klein
Mr. Lawrence Klein
Ms. Margaret Figert

Capitol Office
Telephone (605)773-3201
FAX (605)773-3809

Transportation/
Warehouse Division
Telephone (605)773-5280
FAX (605)773-3225

Consumer Hotline
1-800-332-1782

TTY Through
Relay South Dakota
1-800-877-1113

Internet Website
www.puc.state.sd.us/puc/

Jim Burg
Chairman
Pam Nelson
Vice-Chairman
Laska Schoenfelder
Commissioner

William Bullard Jr.
Executive Director

Harlan Best
Martin C. Bettmann
Sue Cichos
Karen E. Cremer
Michele M. Farris
Marlette Fischbach
Heather K. Forney
Shirleen Fugitt
Mary Giddings
Lewis Hammond
Leni Healy
Camron Hoseck
Lisa Hull
Dave Jacobson
Katie Johnson
Bob Knadle
Delaine Kolbo
Charlene Lund
Terry Norum
Gregory A. Rislov
Keith Senger
Rolayne Ailts Wiest

BEFORE THE PUBLIC UTILITIES COMMISSION OF THE STATE OF SOUTH DAKOTA

IN THE MATTER OF THE COMPLAINT FILED BY MRS. CLIFFORD (JOANN) KLEIN, VALENTINE, NEBRASKA, AGAINST U S WEST COMMUNICATIONS, INC. REGARDING POOR SERVICE AND A REQUEST TO HAVE LINES UPDATED	))))))	ORDER KEEPING DOCKET OPEN TC98-184

On October 8, 1998, the Public Utilities Commission (Commission) received a complaint filed by Mrs. Clifford (JoAnn) Klein, Valentine, Nebraska (Complainant), against U S WEST Communications, Inc. (U S WEST) regarding poor service. Complainant outlines a series of service outages, repair difficulties, outdated service, phantom calls, and staffing issues. Complainant also requested adjustment to her U S WEST bill for services not used and long distances calls not made by her.

Pursuant to ARSD 20:10:01:08.01 and 20:10:01:09, if a complaint cannot be settled without formal action, the Commission shall determine if the complaint shows probable cause of an unlawful or unreasonable act, rate, practice or omission to go forward with the complaint.

On November 3, 1998, at a duly noticed meeting, the Commission considered this matter. The Commission voted unanimously to find probable cause. U S WEST filed its answer on November 30, 1998.

The hearing was held on February 3, 1999, beginning at 1:30 P.M., at Cherry-Todd Electric Cooperative, West Highway 18, Mission, South Dakota. The Commission also heard the complaints filed against U S WEST in dockets TC98-183, TC98-199, and TC98-212, since those complaints concern the same general area as this complaint. At the hearing, U S WEST stated that it would do testing and any necessary repairs and report to the Commission. U S WEST filed updates on April 2, 1999 and May 7, 1999. In its April 2, 1999, update, U S WEST reported that it needed to replace part of the buried cable and stated it would take around 90 days to get the cable, make the replacements, and test the system.

At its May 12, 1999, meeting, the Commission unanimously voted to require U S WEST to complete its repairs and testing by June 8, 1999. On June 4, 1999, the Commission received a Motion to Extend Deadline from U S WEST. U S WEST requested that an extension be granted until July 30, 1999, for the completion of all cable work and testing of all carrier systems on the route. At its June 8, 1999, meeting, the Commission considered how to proceed. After listening to comments from the parties, the Commission voted to grant the extension until July 30, 1999. The Commission further voted that if U S WEST fails to meet the July 30, 1999, deadline, the Commission shall issue a show cause order as to why U S WEST should not be fined $1000.00 per day for each day the work remains uncompleted after July 30, 1999. The Commission also voted to hold another hearing after July 30, 1999, to take additional testimony as to the Complainant's quality of service.

The Commission again considered this matter at its August 17, 1999, regularly scheduled meeting. A report was given by both U S WEST and complainants who noted that service problems still exist. The Commission has jurisdiction in this matter pursuant to SDCL Chapters 1-26, 49-2, 49-13, including 49-13-1 through 49-13-14, inclusive, and SDCL Chapter 49-31, including 49-31-3,

49-31-7, 49-31-7.1, 49-31-7.2, 49-31-10, 49-31-11, 49-31-38, 49-31-38.1, 49-31-38.2, 49-31-38.3, 49-31-60, 49-31-61, and ARSD Chapter 20:10:33.

A hearing was held as scheduled on November 4, 1999, beginning at 1:30 P.M. at Cherry-Todd Electric Cooperative, West Highway 18, Mission, South Dakota. At the hearing, the Complainant stated that she had experienced some problems when she attempted to call the Lawrence Klein residence but that essentially her service had been good. U S WEST witness, Ed Peters, stated that according to testing completed prior to July 30, 1999, the services in the area met U S WEST's service quality standards.

At its December 14, 1999, meeting, the Commission considered this matter. The Commission declined to close this docket. The Commission noted that due to the dry fall, the docket should be kept open to determine whether additional problems would arise after it rained or snowed. It is therefore

ORDERED, that this docket shall remain open.

Dated at Pierre, South Dakota, this 21st day of December, 1999.

CERTIFICATE OF SERVICE

The undersigned hereby certifies that this document has been served today upon all parties of record in this docket, as listed on the docket service list, by facsimile or by first class mail, in properly addressed envelopes, with charges prepaid thereon.

By: Delaine Kolbo

Date: 12/23/99

(OFFICIAL SEAL)

BY ORDER OF THE COMMISSION.

JAMES A. BURG, Chairman

PAM NELSON, Commissioner

LASKA SCHOENFELDER, Commissioner

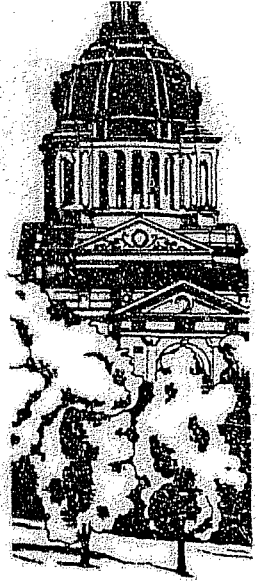

South Dakota Public Utilities Commission

State Capitol Building, 500 East Capitol Avenue, Pierre, South Dakota 57501-5070

May 19, 2000

Ms. Sheryl L. Klein
HC 14, box 37
Valentine, NE 69201

Ms. JoAnn Klein
HC 14, Box 37A
Valentine, NE 69201

Mr. Lawrence Klein
HC 14, Box 37B
Valentine, NE 69201

Ms. Margaret Figert
P. O. Box 229
Mission, SD 57555

Re: Sheryl Klein Complaint - Docket TC98-183
JoAnn Klein Complaint - Docket TC98-184
Lawrence Klein Complaint - Docket TC98-199
Margaret Figert Complaint - Docket TC98-212

Dear Folks:

I thought it appropriate to keep you informed of the action which has occurred regarding the sale of the Valentine exchange in Todd County. As you know, staff asked the Commission for a hearing on the sale of this exchange given the problems we have witnessed in the past, the continued data transmission problems and some concerns over the purchaser, Citizens Communications.

Our motion was argued this past Wednesday before the Commission. The Commission denied our motion on a 2 to 1 vote. That means that no hearing on the sale itself will occur.

Citizens, however, does not have a certificate of authority to operate in South Dakota and will need one before it can take over the actual operation of this exchange. We would hope to raise some of the same questions through this process.

Should any of you have questions or opinions, feel free to contact me at any time. Our toll free number is on the letterhead.

With best regards, I remain

Very truly yours,

Camron Hoseck
Staff Attorney

cc: Ms. Leni Healy
Mr. Harlan Best

Capitol Office
Telephone (605)773-3201
FAX (605)773-3809

Transportation/
Warehouse Division
Telephone (605)773-5280
FAX (605)773-3225

Consumer Hotline
1-800-332-1782

TTY Through
Relay South Dakota
1-800-877-1113

Internet Website
www.state.sd.us/puc/

Jim Burg
Chairman
Pam Nelson
Vice-Chairman
Laska Schoenfelder
Commissioner

William Bullard Jr.
Executive Director

Harlan Best
Martin C. Bettmann
Sue Cichos
Karen E. Cremer
Terry Emerson
Michele M. Farris
Marlette Fischbach
Heather K. Forney
Mary Giddings
Lewis Hammond
Leni Healy
Mary Healy
Camron Hoseck
Lisa Hull
Dave Jacobson
Jennifer Kirk
Bob Knadle
Delaine Kolbo
Charlene Lund
Gregory A. Rislov
Keith Senger
Rolayne Ailts Wiest

BEFORE THE PUBLIC UTILITIES COMMISSION OF THE STATE OF SOUTH DAKOTA

IN THE MATTER OF THE COMPLAINT FILED BY MRS. CLIFFORD (JOANN) KLEIN, VALENTINE, NEBRASKA, AGAINST U S WEST COMMUNICATIONS, INC. REGARDING POOR SERVICE AND A REQUEST TO HAVE LINES UPDATED	))))))	ORDER CLOSING DOCKET TC98-184

On October 8, 1998, the Public Utilities Commission (Commission) received a complaint filed by Mrs. Clifford (JoAnn) Klein, Valentine, Nebraska (Complainant), against U S WEST Communications, Inc. (U S WEST) regarding poor service. Complainant outlines a series of service outages, repair difficulties, outdated service, phantom calls, and staffing issues. Complainant also requested adjustment to her U S WEST bill for services not used and long distances calls not made by her.

Pursuant to ARSD 20:10:01:08.01 and 20:10:01:09, if a complaint cannot be settled without formal action, the Commission shall determine if the complaint shows probable cause of an unlawful or unreasonable act, rate, practice or omission to go forward with the complaint.

On November 3, 1998, at a duly noticed meeting, the Commission considered this matter. The Commission voted unanimously to find probable cause. U S WEST filed its answer on November 30, 1998.

The hearing was held on February 3, 1999, beginning at 1:30 P.M., at Cherry-Todd Electric Cooperative, West Highway 18, Mission, South Dakota. The Commission also heard the complaints filed against U S WEST in dockets TC98-183, TC98-199, and TC98-212, since those complaints concern the same general area as this complaint. At the hearing, U S WEST stated that it would do testing and any necessary repairs and report to the Commission. U S WEST filed updates on April 2, 1999 and May 7, 1999. In its April 2, 1999, update, U S WEST reported that it needed to replace part of the buried cable and stated it would take around 90 days to get the cable, make the replacements, and test the system.

At its May 12, 1999, meeting, the Commission unanimously voted to require U S WEST to complete its repairs and testing by June 8, 1999. On June 4, 1999, the Commission received a Motion to Extend Deadline from U S WEST. U S WEST requested that an extension be granted until July 30, 1999, for the completion of all cable work and testing of all carrier systems on the route. At its June 8, 1999, meeting, the Commission considered how to proceed. After listening to comments from the parties, the Commission voted to grant the extension until July 30, 1999. The Commission further voted that if U S WEST fails to meet the July 30, 1999, deadline, the Commission shall issue a show cause order as to why U S WEST should not be fined $1000.00 per day for each day the work remains uncompleted after July 30, 1999. The Commission also voted to hold another hearing after July 30, 1999, to take additional testimony as to the Complainant's quality of service.

The Commission again considered this matter at its August 17, 1999, regularly scheduled meeting. A report was given by both U S WEST and complainants who noted that service problems still exist.

A hearing was held as scheduled on November 4, 1999, beginning at 1:30 P.M. at Cherry-Todd Electric Cooperative, West Highway 18, Mission, South Dakota. At the hearing, the Complainant stated that she had experienced some problems when she attempted to call the Lawrence Klein residence but that essentially her service had been good. U S WEST witness, Ed Peters, stated that according to testing completed prior to July 30, 1999, the services in the area met U S WEST's service quality standards.

At its December 14, 1999, meeting, the Commission considered this matter. The Commission declined to close this docket. The Commission noted that due to the dry fall, the docket should be kept open to determine whether additional problems would arise after it rained or snowed. The Commission voted to keep the docket open.

At its February 21, 2001, meeting, this matter was on the Commission's agenda for an update, however, it was deferred at that time. Complainant has now reported to Commission Staff that she is satisfied with her service and wished to have the docket closed.

The Commission has jurisdiction in this matter pursuant to SDCL Chapters 1-26, 49-2, 49-13, including 49-13-1 through 49-13-14, inclusive, and SDCL Chapter 49-31, including 49-31-3, 49-31-7, 49-31-7.1, 49-31-7.2, 49-31-10, 49-31-11, 49-31-38, 49-31-38.1, 49-31-38.2, 49-31-38.3, 49-31-60, 49-31-61, and ARSD Chapter 20:10:33.

At its October 10, 2001, meeting, the Commission considered this matter. Upon recommendation of Commission Staff, the Commission voted to close the docket. It is therefore

ORDERED, that the docket shall be closed.

Dated at Pierre, South Dakota, this 18th day of October, 2001.

CERTIFICATE OF SERVICE

The undersigned hereby certifies that this document has been served today upon all parties of record in this docket, as listed on the docket service list, by facsimile or by first class mail, in properly addressed envelopes, with charges prepaid thereon.

By: Delaine Kolbo

Date: 10/19/01

(OFFICIAL SEAL)

BY ORDER OF THE COMMISSION

JAMES A. BURG, Chairman

PAM NELSON, Commissioner

BOYCE, MURPHY, McDOWELL & GREENFIELD, L.L.P.

ATTORNEYS AT LAW

Jeremiah D. Murphy
Russell R. Greenfield
David J. Vickers
Gary J. Pashby
Vance R.C. Goldammer
Thomas J. Welk
Terry N. Prendergast
James E. McMahon
Michael S. McKnight
Gregg S. Greenfield
Tamara A. Wilka
Roger A. Sudbeck
Carolyn A. Thompson
Lisa Hansen Marso

Norwest Center, Suite 600
101 North Phillips Avenue
Sioux Falls, South Dakota 57104
P.O. Box 5015
Sioux Falls, South Dakota 57117-5015

Telephone 605 336-2424
Facsimile 605 334-0618

Counsel
John R. McDowell

J.W. Boyce (1884-1915)
John S. Murphy (1924-1966)

RECEIVED
DEC 01 1998
SOUTH DAKOTA PUBLIC UTILITIES COMMISSION

FAX Received NOV 30 1998

November 30, 1998

William Bullard, Executive Director
Public Utilities Commission
State Capitol Building
500 East Capitol Avenue
Pierre, SD 57501

VIA FACSIMILE – 773-3809

Re: In the Matter of the Complaint Filed by Mrs. Clifford (JoAnn) Klein, Valentine, Nebraska, against U S WEST Communications, Inc. Regarding Poor Service and a Request to Have Lines Updated (TC 98-184)

Dear Bill:

Enclosed please find the Answer to Complaint and Certificate of Service in the above referenced file. The original and ten (10) copies are being mailed to you today.

Sincerely yours,

BOYCE, MURPHY, MCDOWELL
& GREENFIELD, L.L.P.

Thomas J. Welk

TJW/vjj
Enclosure
cc: Colleen Sevold (w/enc.)
Jim Gallegos (w/enc.)
Joann Klein (w/enc.)

EXHIBIT
4
3-3-99 LG

DEC 01 1998
SOUTH DAKOTA PUBLIC UTILITIES COMMISSION

BEFORE THE PUBLIC UTILITIES COMMISSION
OF THE STATE OF SOUTH DAKOTA

IN THE MATTER OF THE COMPLAINT FILED BY MRS. CLIFFORD (JOANN) KLEIN, VALENTINE, NEBRASKA, AGAINST U S WEST COMMUNICATIONS, INC. REGARDING POOR SERVICE AND A REQUEST TO HAVE LINE UPDATED	**TC 98-184** **ANSWER TO COMPLAINT AND CERTIFICATE OF SERVICE**

FAX Received NOV 30 1998

Pursuant to the November 9, 1998 Order of the Public Utilities Commission ("Commission") in this docket, received on November 12, 1998, and pursuant to ARSD 20:10:01:11.01 U S WEST Communications, Inc. ("U S WEST") provides the following Answer to the Complaint in this matter:

1. U S WEST admits, as alleged in the Complaint of Clifford and JoAnn Klein of Valentine, Nebraska ("Customer") that the Customer has experienced certain outages of telephone and that at certain times such outages were reported to U S WEST. To its best knowledge and belief, U S WEST responded to all trouble reports.

2. This customer is served out of the Valentine, Nebraska office.

3. The U S WEST technicians in Nebraska have done extensive work on this system to provide the Klein's good voice grade service.

4. U S WEST has credited and will credit the Customer for any days the Customer was out of service.

5. In regard to any damages suffered by the Customer as alleged in the Complaint, such damages, if any, are limited by the applicable tariff which has been filed and approved by the Commission, which is attached hereto as Exhibit A. In addition, in the extent that such damages alleged by the Customer are not limited by the tariff, U S WEST remits the Customer to prove any damages sustained.

DATED this 30th day of November, 1998.

Thomas J. Welk
BOYCE, MURPHY, McDOWELL &
GREENFIELD, L.L.P.
101 North Phillips Avenue, Suite 600
P. O. Box 5015
Sioux Falls, SD 57117-5015
(605) 336-2424

Attorneys for U S WEST Communications, Inc.

CERTIFICATE OF SERVICE

I, Thomas J. Welk, do hereby certify that I am a member of the law firm of Boyce, Murphy, McDowell & Greenfield, L.L.P., and on the 30th day of November, 1998, a true and correct copy of U S WEST's Answer to Complaint was sent via US mail, postage prepaid, to the following address:

Clifford and JoAnn Klein
HC 14, Box 37A
Valentine, NE 69201

Thomas J. Welk

2. GENERAL REGULATIONS - CONDITIONS OF OFFERING

2.4 LIABILITY OF THE COMPANY

2.4.1 SERVICE LIABILITIES

A. Limitations

1. The Company's liability, if any, for its willful misconduct is not limited by this Tariff. With respect to any other claim or suit, by a customer or by any others, for damages associated with the installation, provision, preemption, termination, maintenance, repair, or restoration of service, the Company's liability, if any, shall not exceed an amount equal to the proportionate part of the monthly recurring charge for the service for the period during which the service was affected. This liability shall be in addition to any amounts that may otherwise be due the customer under this Tariff as an allowance for interruptions.

2. The services furnished by the Company, in addition to the limitations set forth preceding, also are subject to the following limitation: The Company shall not be liable for damage arising out of mistakes, omissions, interruptions, delays, errors or defects in transmission or other injury, including but not limited to injuries to persons or property from voltages or currents transmitted over the service of the Company caused by Customer-provided equipment (except where a contributing cause is the malfunctioning of a Company-provided connecting arrangement, in which event the liability of the Company shall not exceed an amount equal to a proportional amount of the Company billing for the period of service during which such mistake, omission, interruption, delay, error, defect in transmission or injury occurs).

3. The customer indemnifies and saves the Company harmless against claims for libel, slander, infringement of copyright arising from the use of material transmitted over its facilities, or infringement of patents arising from combining with or using in connection with, facilities of the Company, apparatus or systems of the customer, and against all other claims arising out of any act or omission of the customer in connection with facilities provided by the Company.

4. Calling Privileges

Company tariffs govern and fix the outgoing service of customers and in no manner guarantees to them the same incoming service. All incoming service of a customer depends upon and is limited by the right of a calling customer to such service.

EXHIBIT
A

USWEST COMMUNICATIONS

http://www.uswest.com

CLIFFORD KLEIN
Bill Date: Oct 7, 1998
Account No: 605 378-3851 369

Balance Forward	New Charges	Total Amount Due	Due Date for New Charges
$.18CR	$88.54	$88.36	Oct 28, 1998

Account Summary

▼ Previous Balance

Charges		50.43
Adjustments		.18CR
Payment	*Thank you for your payment*	50.43CR
Balance Forward		**$.18CR**

▼ New Charges

	For questions, call:	
U S WEST Communications	1-800-244-1111	29.79
AT&T	1-800-222-0300	58.75
Total New Charges		**$88.54**

TOTAL AMOUNT DUE **$88.36**

We appreciate your business.

A late payment charge of 1.5% or minimum of $1.00 may apply if total amount due does not reach us by Nov 7, 1998.

The company you have chosen for interLATA calls (long distance calls outside your local toll calling area) is AT&T.

The new CustomChoice package includes your phone line PLUS your choice of 16 services for a flat rate of $29.95 per month! CustomChoice makes you automatically eligible for special discounts on such services as Voice Messaging. Voice Messaging gets the messages your answering machine misses when you're on the phone or online. Call 1-888-305-2484 by 11-6 and receive a $20 gift check.

▼ LOCAL CHARGES

MONTHLY SERVICE-OCT 7 THRU NOV 6	
(INCLUDES 50 FOR EXTENDED LOCAL CALLING AREA) 378-3851	22.60
BASIC SERVICES	
These services are necessary for you to use your telephone.	
RESIDENCE LINE 22.60	
FEDERAL ACCESS CHARGE	3.50
FEATURE USAGE	.75
LONG DISTANCE	.85
TELECOMMUNICATIONS RELAY SERVICES	.15
TAX: FED .83 STATE 1.11	1.94
U S WEST COMMUNICATIONS LOCAL CHARGES	**$29.79**

ADJUSTMENTS

ADJUSTMENTS APPLIED-AT&T	.18CR
TOTAL ADJUSTMENTS	**.18CR**

FEATURE USAGE

NO.	DATE	TIME	DESCRIPTION	
1.	OCT 4	927PM	LAST CALL RETURN ACTIVATION	.75
			LAST CALL RETURN USAGE	
			1 ACTIVATIONS AT $ .75 PER ACTIVATION	.75
			LAST CALL RETURN CARRIES A MAXIMUM CHARGE OF 6.00 PER LINE	
TOTAL FEATURE USAGE				**.75**

LONG DISTANCE CALLS

NO.	DATE	TIME	PLACE	AREA-NUMBER	TYPE	MIN	AMOUNT
2.	OCT 5	211AM	TO NATL DA	605 555-1212	L	1.0	.85
	Type of Long Distance Calls:						
	L-LATE NIGHT						
TOTAL LONG DISTANCE CALLS						**1.0**	**.85**

continued on back

AT&T True Reach Savings ℠ Summary

Total Calls Eligible for True Reach	37.25	
1. Calls Eligible for Discount	37.25 Disc @ 25%	27.93

Total Charges for AT&T True Reach Savings ℠ **$27.93**

NOTE: You have saved 9.32 with AT&T True Reach ℠ Savings this month.

AT&T Itemized Long Distance Calls

- Direct Dialed Calls
  - Domestic Calls

	Date	Time	Place And Number Called		Type	Rate	Min	Amount
2.	SEP 21	10:08A	To DIR ASST	NE 402 411-0000	Direct		1	1.10
3.	SEP 21	3:12P	To DIR ASST	NE 402 411-0000	Direct		1	1.10
4.	SEP 21	4:54P	To DIR ASST	NE 402 411-0000	Direct		1	1.10
5.	SEP 21	5:29P	To DIR ASST	NE 402 411-0000	Direct		1	1.10
6.	SEP 21	6:13P	To DIR ASST	NE 402 411-0000	Direct		1	1.10
7.	SEP 21	7:23P	To DIR ASST	NE 402 411-0000	Direct		1	1.10
8.	SEP 21	7:51P	To DIR ASST	NE 402 411-0000	Direct		1	1.10
9.	SEP 22	12:52A	To DIR ASST	NE 402 411-0000	Direct		1	1.10
10.	SEP 22	2:11A	To DIR ASST	NE 402 411-0000	Direct		1	1.10
11.	SEP 22	2:40A	To DIR ASST	NE 402 411-0000	Direct		1	1.10
12.	SEP 22	3:13A	To DIR ASST	NE 402 411-0000	Direct		1	1.10
13.	SEP 22	3:31A	To DIR ASST	NE 402 411-0000	Direct		1	1.10
14.	SEP 22	6:33A	To DIR ASST	NE 402 411-0000	Direct		1	1.10
15.	SEP 22	10:12A	To DIR ASST	NE 402 411-0000	Direct		1	1.10
16.	SEP 22	11:09A	To DIR ASST	NE 402 411-0000	Direct		1	1.10
17.	SEP 22	12:30P	To DIR ASST	NE 402 411-0000	Direct		1	1.10
18.	SEP 22	1:02P	To DIR ASST	NE 402 411-0000	Direct		1	1.10
19.	SEP 22	2:10P	To DIR ASST	NE 402 411-0000	Direct		1	1.10
20.	SEP 25	4:50A	To DIR ASST	NE 402 411-0000	Direct		1	1.10
21.	SEP 25	5:17A	To DIR ASST	NE 402 411-0000	Direct		1	1.10
22.	SEP 25	7:23A	To DIR ASST	NE 402 411-0000	Direct		1	1.10
23.	SEP 25	7:29A	To DIR ASST	NE 402 411-0000	Direct		1	1.10
24.	SEP 25	5:32A	To DIR ASST	NE 402 411-0000	Direct		1	1.10

	Date	Time	Place And Number Called		Type	Rate	Min	Amount
1.	SEP 27	6:02A	To DIR ASST	NE 402 411-0000	Direct		1	1.10
	Total Domestic Calls					24 Minutes		26.40
Total Direct Dialed Calls						24 Minutes		26.40

Total AT&T Itemized Long Distance Calls **$26.40**

Taxes And Surcharges

	Description	Amount
2.	Federal Tax @ 3%	1.68
3.	State and Local Tax	.96

Total Taxes And Surcharges **$2.64**

This portion of your bill is provided as a service to AT&T. There is no connection between U S WEST Communications and AT&T. You may choose another company for your long distance telephone calls while still receiving your local telephone service from U S WEST Communications.