Exhibit 3

230 kV LANGE LINE (LNG)

TO 87L-LNG
TO 21L-LNG
(3) S/AS 192 kV
89a
23474

23460 | 23461 (FUTURE) | 23462 | 23463 | 23464 | 23465

5HT1
87L-LNG
21L-LNG
87T1 PRI
87T1 BU
5HT1
86BT1

2000:5MR SET @ 2000:5 | 2000:5MR SET @ 1200:5 | CT | 2000:5MR SET @ 1200:5 | 2000:5MR SET @ 1200:5

CCVT-LNG
(3) CCVT
1155/20001
P1

PT, BUS PTBUS
20001 20001
FU FU

21L-SRC (23470)
87L-LNG (DTT-LNG)
5HT1 (23464)
87L-SRC (DTT-SRC)
LOCKOUT

21L-SRC
SEL-421

21L-SRC
87L-LNG
21L-LNG
87L-SRC

21L-SRC
86BT1
87T1 PRI
5HT1

87L-SRC (DTT-SRC)
5HT1 (23464)
21L-LNG (23467)
51-CT4 (6WR07)
87T1 PRI (6WR16)

87L-SRC
SEL-311L

RELAY PANEL 3

21L-LNG (23467)
87L-LNG (DTT-LNG)
21L-SRC (23470)
51-CT4 (6WR07)
87T1 PRI (6WR16)

21L-LNG
SEL-421

86BT1
21L-LNG
87L-LNG
87T1 PRI
5HT1

B@ ONLY

5HT1 (23464)
87L-LNG (DTT-LNG)
87L-SRC (DTT-SRC)
21L-SRC (23470)

21L-LNG
87L-LNG
87L-SRC
21L-SRC

8 7LNG
SEL-311L

RELAY PANEL 3

230 KV BUS T1

8 7BT1
SEL-587Z

87BTICO
86BTL

RELAY PANEL 4

TRIP TC1 & TC2
23464
23470
6WR07
6WR16
BF1
5HT1 (23464)
51-CT4 (6WR07)
87T1 PRI (6WR16)
21L-SRC (23470)

21L-SRC
87L-LNG
21L-LNG
87L-SRC
21L-SRC

87L-LNG
21L-LNG

CCVT-SRC
(3) CCVT
1155/20001
P2

PT1BP PT2BP
20001 20001
FU FU

21L-SRC
87L-SRC
21L-SRC
87T1 PRI
87T1 BU
86BT1
5HT1

87L-SRC
21L-SRC
86BT1

23466 | 2000:5MR SET @ 1200:5 | 2000:5MR SET @ 1200:5 | 23467 | 2000:5MR SET @ 1200:5 | 2000:5MR SET @ 1200:5 | 23468

23469 | 2000:5MR SET @ 2000:5 | 2000:5MR SET @ 1200:5 | 23470 | 2000:5MR SET @ 1200:5 | 2000:5MR SET @ 1200:5 | 23471

23472

P3
PT3P
20001
FU
BM
20001
FU

CCVT-T1
(1) CCVT
1155/20001

5HT1
86BT1
87L-LNG
21L-LNG
87T1 PRI

5HT1
SEL-451

87L-LNG (DTT-LNG)
21L-LNG (23467)
21L-SRC (23470)
51-CT4 (6WR07)
87T1 PRI (6WR16)

5HT1 (23464)
87L-SRC (DTT-SRC)
21L-LNG (23467)
51-CT4 (6WR07)
87T1 PRI (6WR16)
21L-SRC (23470)

RELAY PANEL 4

51-CT4 (6WR07)
87L-BF2 PRI (DTT-BF2)
87L-BF2 BU (6WR13)
5HT1 (23464)
21L-SRC (23470)

8 7BTRI
SEL-487E

FROM 87T1 BU

87T1 PRI (6WR16)
5HT1 (23464)
21L-SRC (23470)
87L-CT4 (6WR07)

87T1 PRI (6WR16)
87L-CT4 (DTT-CT4)
21L-LNG69 BU (6WR04)
5HT1 (23464)
21L-SRC (23470)

87T1 PRI
87L-BF2 BU
87L-BF2 PRI
86BT1

87T1 PRI
86BT1
87L-CT4
51-CT4

RELAY PANEL 5

23475
89a
TO 87L-SRC
TO 21L-SRC
(3) S/AS 192 kV

230 kV SOUTH RAPID LINE (SRC)

43P1
FU
TS

MTR-T1
SEL-735

8 7TBU
SEL-387

TO 87T1 (87T1 PRD

RELAY PANEL 5

CD
FROM 69 kV BKR CT 6WR16
WRC-E-001C

CC
FROM 69 kV BKR CT 6WR07
WRC-E-001B

1200:5MR SET @ 600:5
1200:5MR SET @ 600:5
2000:5MR SET @ 2000:5

XFMR T1
230/69/13.2kV
90/120/150
ONAN/ONAF/ONAF

12000:5MR SHORTED
12000:5MR SHORTED
12000:5MR SHORTED

2000:5MR SET @ 1200:5

(3) S/AS 60 kV

BA
TO 69 kV BUS 1
VIA 6WR22
WRC-E-001B

(3) S/AS 192 kV

2000:5MR SET @ 2000:5
2000:5MR SET @ 1200:5
2000:5MR SHORTED

(3) S/AS 18 kV

CB
FROM 69 kV BKR CT 6WR16
WRC-E-001C

P5A
FROM P5
WRC-E-001B

P9A
FROM P9
WRC-E-001C

CA
FROM 69 kV BKR CT 6WR07
WRC-E-001B

NOTES:
1. SIGNALS PRECEDED BY AN ASTERISK (*) ARE SENT VIA GOOSE MESSAGING, NOT VIA HARD-WIRED OUTPUTS.

P:\04\233\00\DWG\RECORD\WRC\CAD\WRC-E-001A.DWG

DGR ENGINEERING
ROCK RAPIDS, IOWA
(712) 472-2531

DATE	DRAWN BY	NO.	APPROVED BY	REVISION DESCRIPTION
06-20	SMW	1	PDK	CONFORMING TO CONSTRUCTION RECORDS
10-19	SMW	0	PDK	FOR CONSTRUCTION

BLACK HILLS ENERGY

WEST RAPID CITY SUBSTATION

PROTECTION AND CONTROL ONE LINE
230 kV

DRAWN BY MEL DATE 06-18
APPROVED BY PDK DATE 06-18

DWG NO. WRC-E-001A REVISION 1

69 kV LINE
LANGE
(LNG69)

69 kV LINE
RAPID CITY CT #4
(CT4)

TO BF CT4
VIA BEN FRENCH
SUBSTATION

RELAY
PANEL 10

RELAY
PANEL 8

RELAY
PANEL 8

P:\0423300\DWGRECORD\WRCC\CAD\WRC-E-001B.DWG

DGR ENGINEERING
ROCK RAPIDS, IOWA
(712) 472-2531

DATE	DRAWN BY	NO.	APPROVED BY	REVISION DESCRIPTION
06-20	SMW	1	PDK	CONFORMING TO CONSTRUCTION RECORDS
10-19	SMW	0	PDK	FOR CONSTRUCTION

BLACK HILLS ENERGY

WEST RAPID CITY SUBSTATION

PROTECTION AND CONTROL ONE LINE
69 kV BAY 1

DRAWN BY MEL DATE 09-18
APPROVED BY PDK DATE 09-18
DWG NO. WRC-E-001B REVISION 1

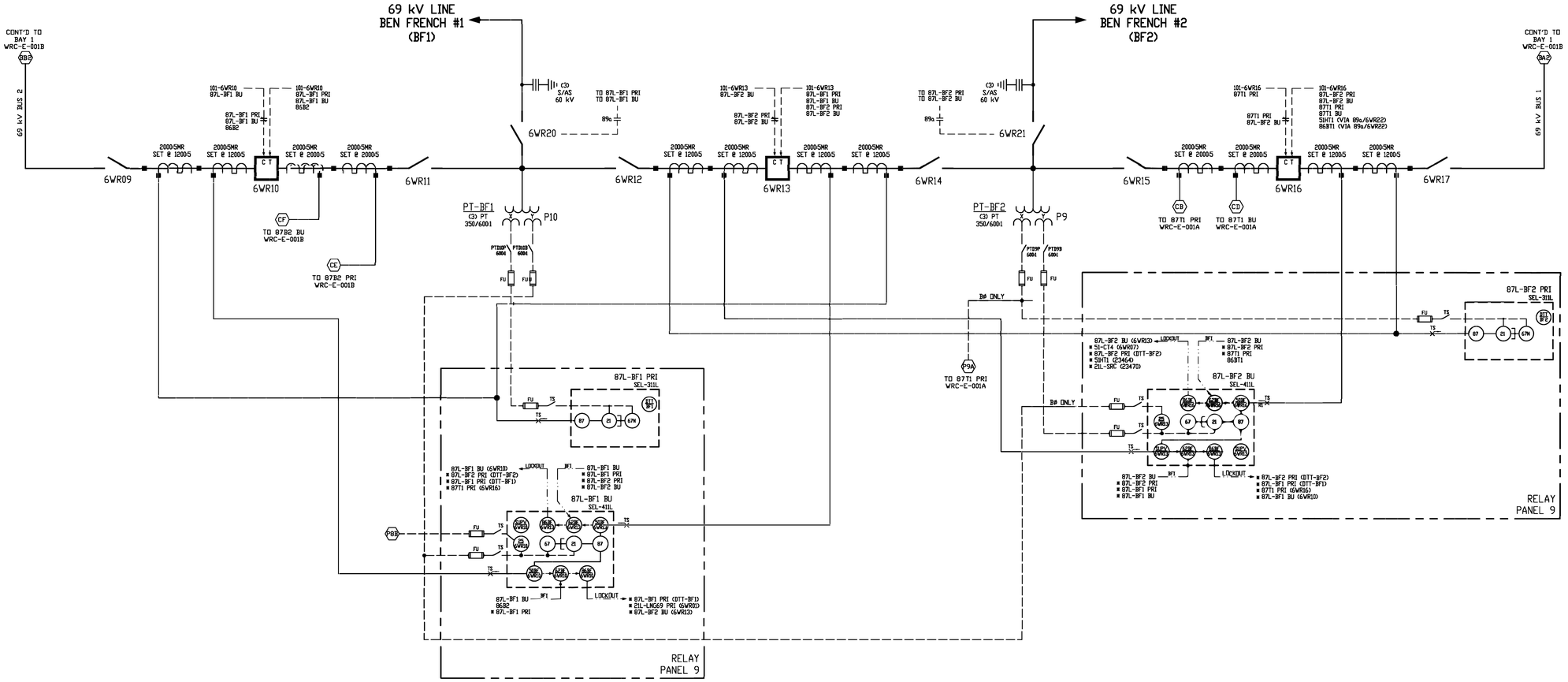

P:\04023\00\DWG\RECORD\WRC\CAD\WRC-E-001C.DWG

DGR ENGINEERING
ROCK RAPIDS, IOWA
(712) 472-2531

DATE	DRAWN BY	NO.	APPROVED BY	REVISION DESCRIPTION
06-20	SMW	1	PDK	CONFORMING TO CONSTRUCTION RECORDS
10-19	SMW	0	PDK	FOR CONSTRUCTION

BLACK HILLS ENERGY

WEST RAPID CITY SUBSTATION

PROTECTION AND CONTROL ONE LINE
69 kV BAY 2

DRAWN BY	MEL	DATE	09-18	DWG NO.	WRC-E-001C	SECTION	1	REV
APPROVED BY	PDK	DATE	09-18					

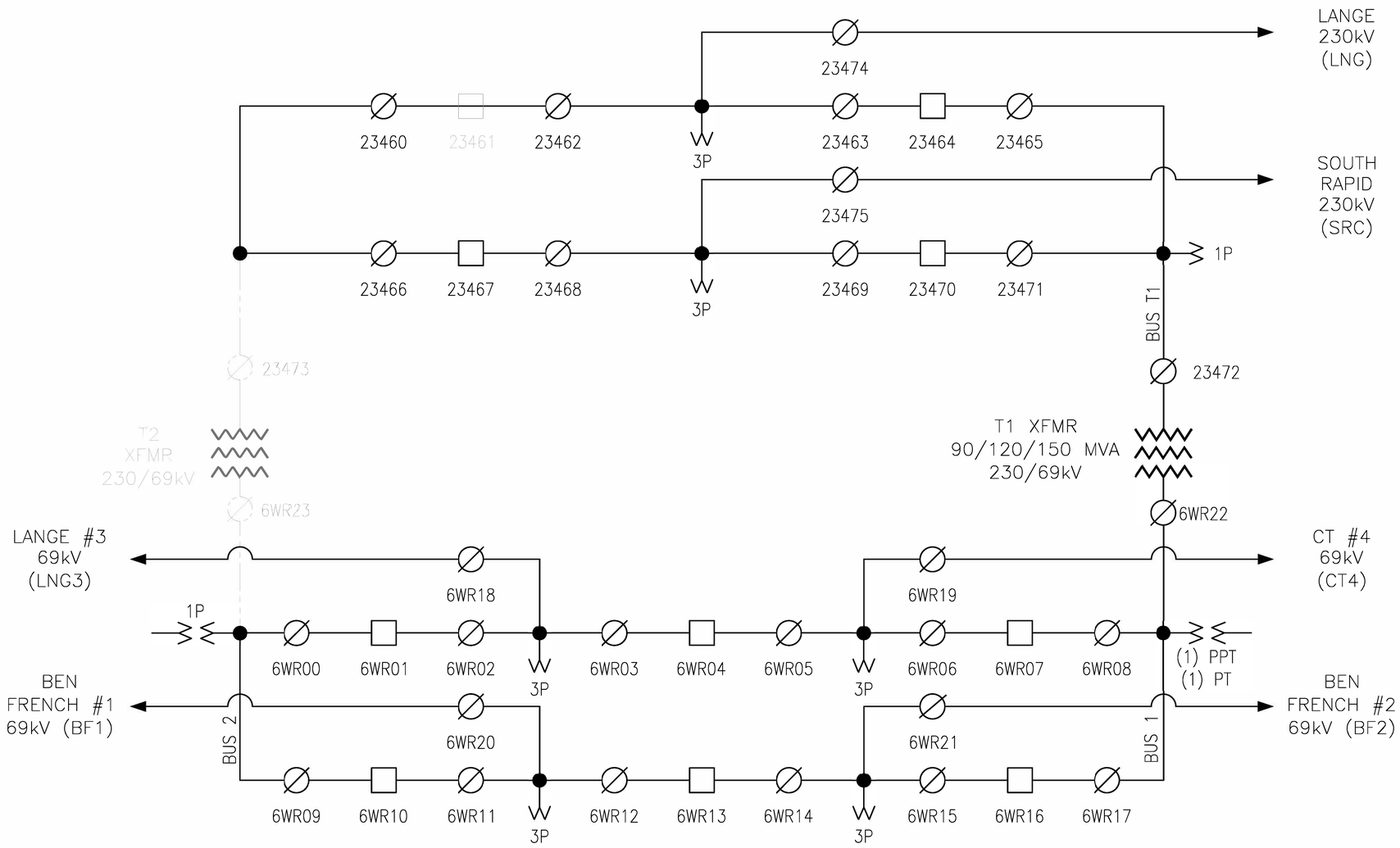

DATE	DRAWN BY	NO.	APPROVED BY	REVISION DESCRIPTION
06-20	SMV	1	PDK	CONFORMING TO CONSTRUCTION RECORDS
01-19	SMV	0	PDK	FOR CONSTRUCTION

BLACK HILLS ENERGY

WEST RAPID CITY SUBSTATION

SWITCHING ONE-LINE

DRAWN BY AP DATE 6/11/18

APPROVED BY JA DATE 6/11/18

DWG NO. WRC-E-006

REVISION NO. 1

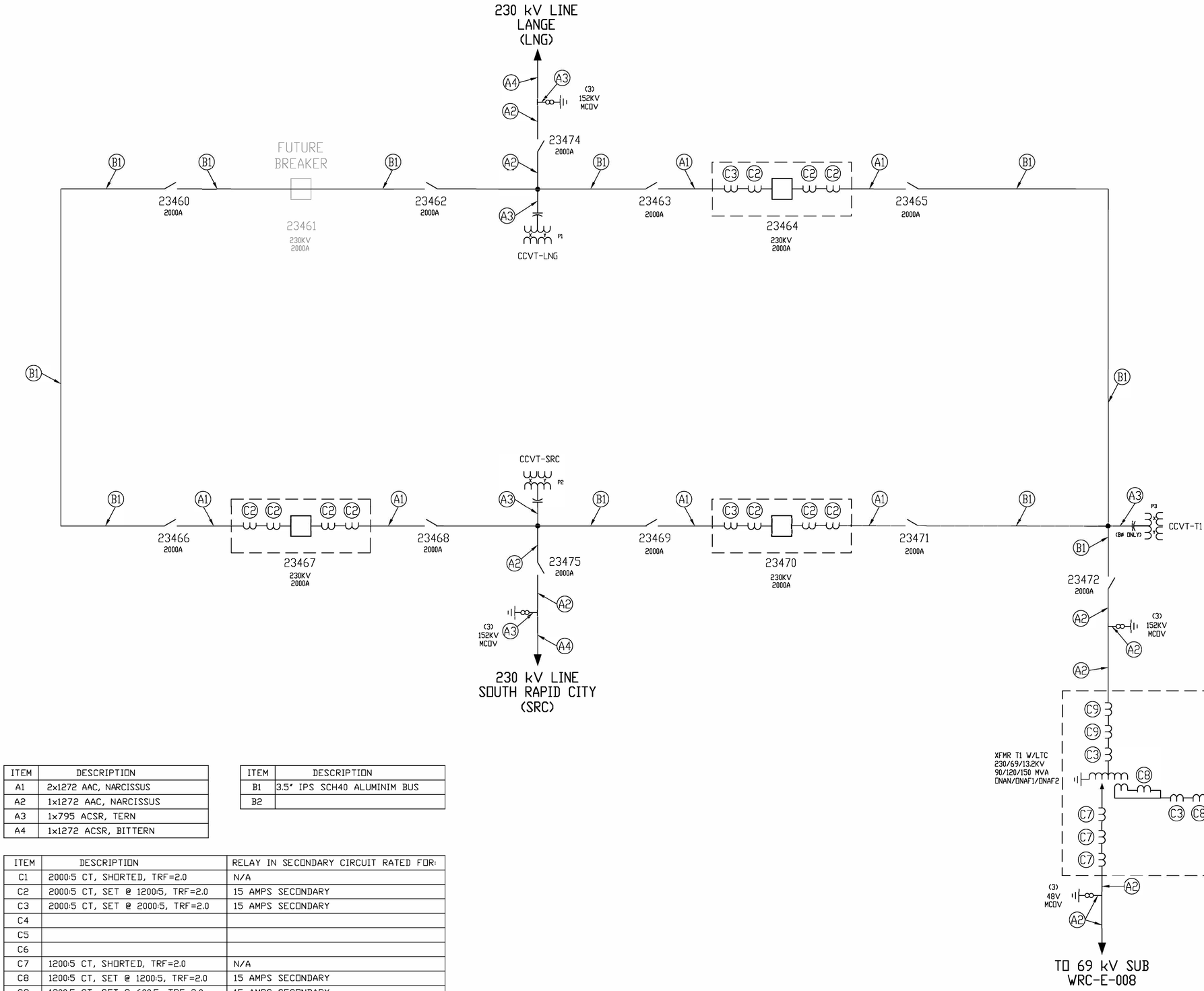

ITEM	DESCRIPTION
A1	2x1272 AAC, NARCISSUS
A2	1x1272 AAC, NARCISSUS
A3	1x795 ACSR, TERN
A4	1x1272 ACSR, BITTERN

ITEM	DESCRIPTION
B1	3.5" IPS SCH40 ALUMINIM BUS
B2	

ITEM	DESCRIPTION	RELAY IN SECONDARY CIRCUIT RATED FOR:
C1	2000:5 CT, SHORTED, TRF=2.0	N/A
C2	2000:5 CT, SET @ 1200:5, TRF=2.0	15 AMPS SECONDARY
C3	2000:5 CT, SET @ 2000:5, TRF=2.0	15 AMPS SECONDARY
C4		
C5		
C6		
C7	1200:5 CT, SHORTED, TRF=2.0	N/A
C8	1200:5 CT, SET @ 1200:5, TRF=2.0	15 AMPS SECONDARY
C9	1200:5 CT, SET @ 600:5, TRF=2.0	15 AMPS SECONDARY
C10		

DATE	DRAWN BY	NO.	APPROVED BY	REVISION DESCRIPTION
06-20	SMV	1	PDK	CONFORMING TO CONSTRUCTION RECORDS
10-19	SMV	0	PDK	FOR CONSTRUCTION

BLACK HILLS ENERGY

WEST RAPID CITY SUBSTATION

230kV RATINGS ONE-LINE

DRAWN BY: A.P DATE: 5/31/18

APPROVED BY: JA DATE: 5/31/18

DWG NO. WRC-E-007 REVISION NO. 1

P:\04\233\00\DWG\RECORD\WRC\CAD\WRC-E-007.DWG

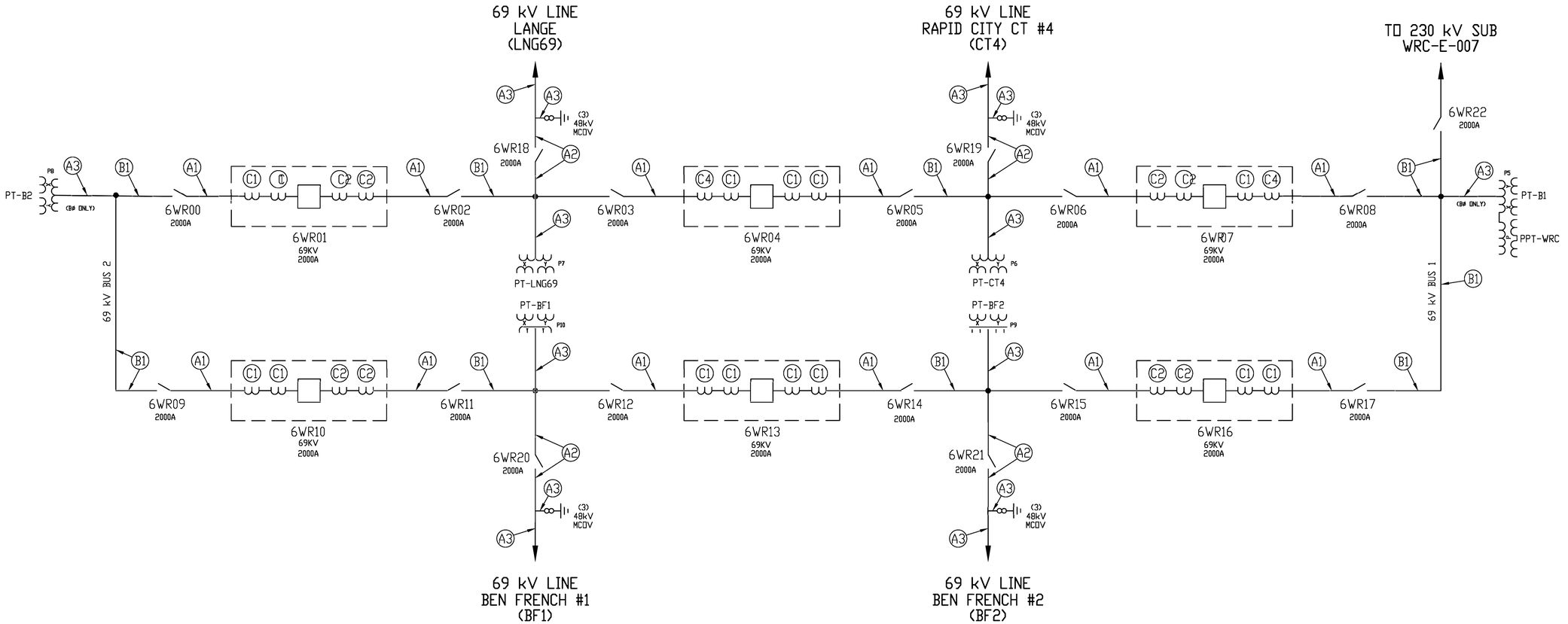

ITEM	DESCRIPTION
A1	2x1272 AAC, NARCISSUS
A2	1x1272 AAC, NARCISSUS
A3	1x795 ACSR, TERN
A4	1x1272 ACSR, BITTERN

ITEM	DESCRIPTION
B1	3.5" IPS SCH40 ALUMINIM BUS

ITEM	DESCRIPTION	RELAY IN SECONDARY CIRCUIT RATED FOR:
C1	2000:5 CT, SET @ 1200:5, TRF=2.0	15 AMPS
C2	2000:5 CT, SET @ 2000:5, TRF=2.0	15 AMPS
C3	2000:5 CT, SHORTED, TRF=2.0	N/A
C4	2000:5 CT, SET @ 800:5, TRF=2.0	10 AMPS

P:\04233\00\DWG\RECORD\WRC\CAD\WRC-E-008.DWG

DATE	DRAWN BY	NO.	APPROVED BY	REVISION DESCRIPTION
06-20	SMW	1	PBK	CONFORMING TO CONSTRUCTION RECORDS
10-19	SMW	0	PBK	FOR CONSTRUCTION

BLACK HILLS ENERGY

WEST RAPID CITY SUBSTATION

69kV RATINGS ONE-LINE

DRAWN BY AP DATE 5/31/18

APPROVED BY JA DATE 5/31/18

DWG NO. WRC-E-008

REVISION 1

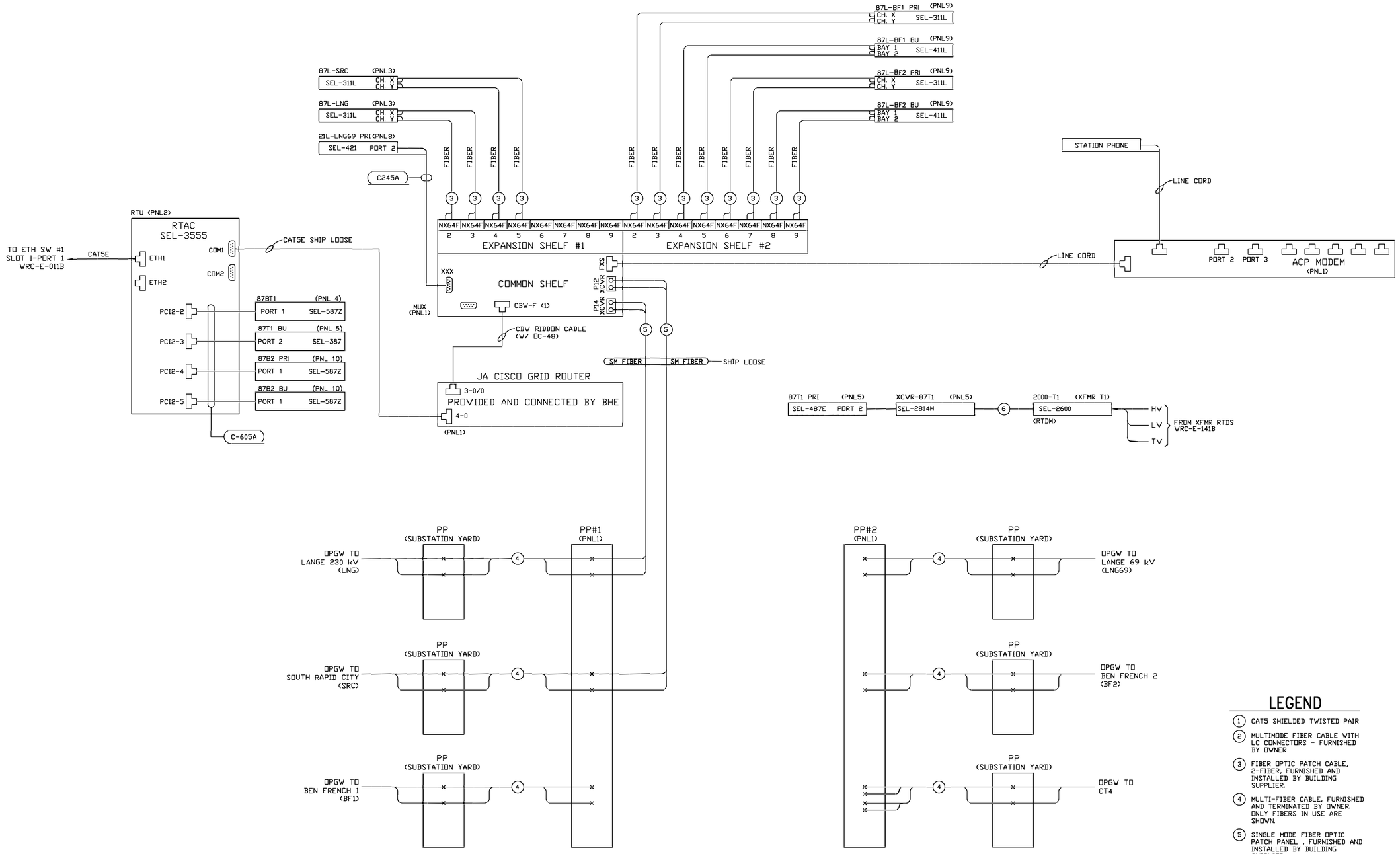

LEGEND

1. CAT5 SHIELDED TWISTED PAIR
2. MULTIMODE FIBER CABLE WITH LC CONNECTORS - FURNISHED BY OWNER
3. FIBER OPTIC PATCH CABLE, 2-FIBER, FURNISHED AND INSTALLED BY BUILDING SUPPLIER.
4. MULTI-FIBER CABLE, FURNISHED AND TERMINATED BY OWNER. ONLY FIBERS IN USE ARE SHOWN.
5. SINGLE MODE FIBER OPTIC PATCH PANEL , FURNISHED AND INSTALLED BY BUILDING SUPPLIER.

DATE	DRAWN BY	NO.	APPROVED BY	REVISION DESCRIPTION
06-20	SMW	1	PDK	CONFORMING TO CONSTRUCTION RECORDS
10-19	SMW	0	PDK	FOR CONSTRUCTION

BLACK HILLS ENERGY

WEST RAPID CITY SUBSTATION COMMUNICATION NETWORK DIAGRAM

DRAWN BY SMW DATE 11-18
APPROVED BY PDK DATE 11-18
DWG NO. WRC-E-011A REVISION 1

DGR ENGINEERING
ROCK RAPIDS, IOWA
(712) 472-2531

P:\04233\00\DWG\RECORD\WRC\CAD\WRC-E-011A.DWG

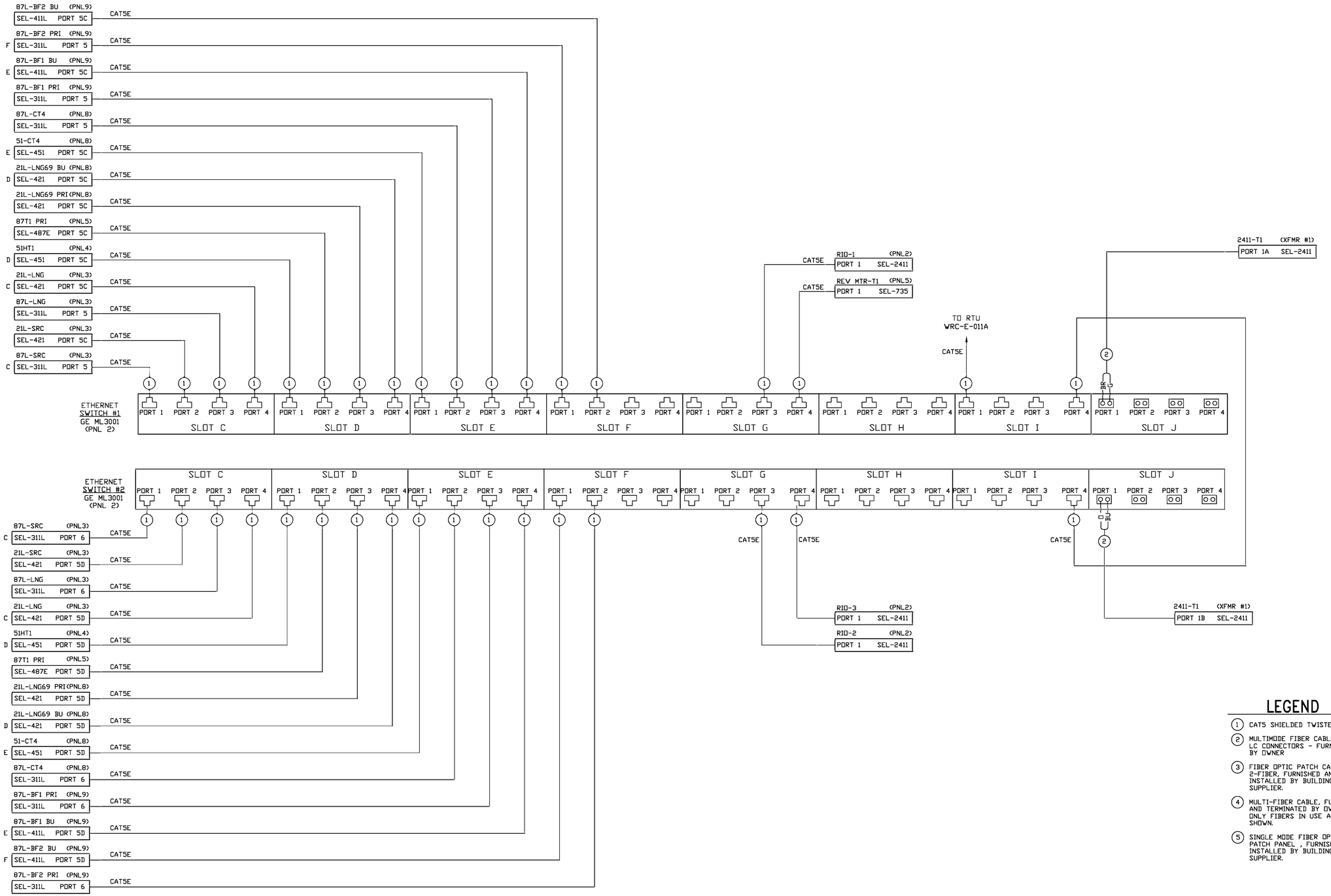

LEGEND

1. CAT5 SHIELDED TWISTED PAIR
2. MULTIMODE FIBER CABLE WITH LC CONNECTORS - FURNISHED BY OWNER
3. FIBER OPTIC PATCH CABLE, 2-FIBER, FURNISHED AND INSTALLED BY BUILDING SUPPLIER.
4. MULTI-FIBER CABLE, FURNISHED AND TERMINATED BY OWNER. ONLY FIBERS IN USE ARE SHOWN.
5. SINGLE MODE FIBER OPTIC PATCH PANEL , FURNISHED AND INSTALLED BY BUILDING SUPPLIER.

P:\04233\00\DWG\RECORD\WRC\CAD\WRC-E-011B.DWG

DGR ENGINEERING
ROCK RAPIDS, IOWA
(712) 472-2531

DATE	DRAWN BY	NO.	APPROVED BY	REVISION DESCRIPTION
06-20	SMW	1	PDK	CONFORMING TO CONSTRUCTION RECORDS
10-19	SMW	0	PDK	FOR CONSTRUCTION

BLACK HILLS ENERGY

WEST RAPID CITY SUBSTATION COMMUNICATION NETWORK DIAGRAM

DRAWN BY SMW DATE 11-18
APPROVED BY PDK DATE 11-18
DWG NO. WRC-E-011B REVISION 1

NOTES:

1. DO NOT PLACE MORE THAN TEN (10) IED'S ON EACH SEL2407 OUTPUT WITH STANDARD IRIG-B AND NO MORE THAN TWENTY (20) IED'S ON EACH SEL2407 OUTPUT FOR HIGH ACCURACY IRIG-B (SEL400 SERIES RELAYS).
2. MAXIMUM CABLE LENGTH PER OUTPUT IS 40 METERS (131.2 FEET).
3. ADD 50 OHM BNC TERMINATOR FOR OUTPUTS THAT HAVE FOUR (4) IED'S OR LESS ON AN OUTPUT.
4. IRIG-B SIGNALS SHOULD BE LIMITED TO CONTROL ENCLOSURE DESIGN APPLICATIONS (DO NOT RUN THIS SIGNAL INTO THE SUBSTATION YARD).

LEGEND:

(2) 4970 BNC BREAKOUT

(3) BNC TEE CONNECTOR - JACK PLUG JACK

(6) BNC TEE CONNECTOR - JACK JACK JACK

[4] 50 OHM BNC TERMINATOR

[5] GPS CLOCK SURGE PROTECTOR

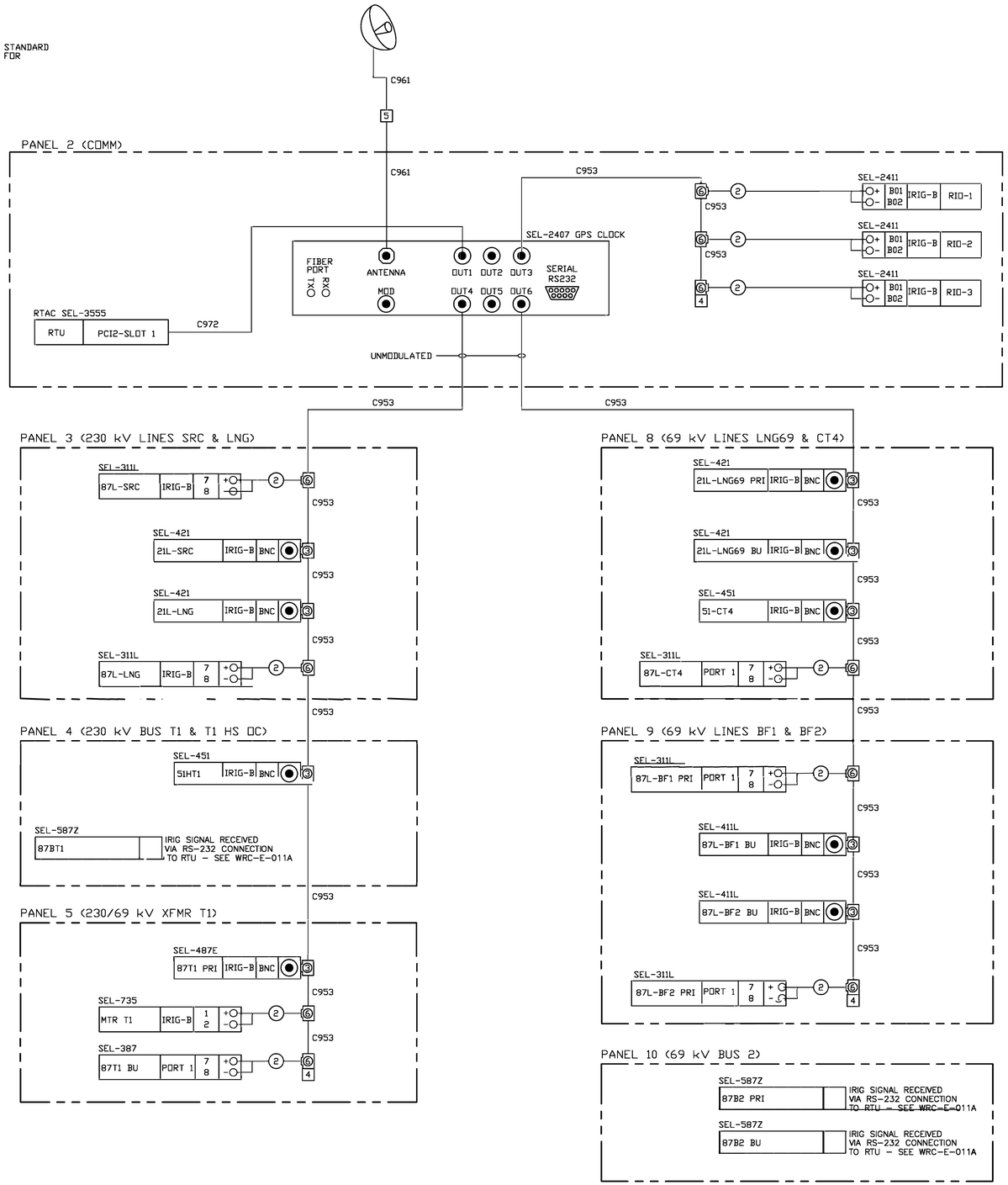

P:\04123\00\DWG\RECORD\WRC\CAD\WRC-E-012.DWG

DGR ENGINEERING
ROCK RAPIDS, IOWA
(712) 472-2531

DATE	DRAWN BY	NO.	APPROVED BY	REVISION DESCRIPTION
06-20	SMW	1	PDK	CONFORMING TO CONSTRUCTION RECORDS
10-19	SMW	0	PDK	FOR CONSTRUCTION

BLACK HILLS ENERGY

WEST RAPID CITY SUBSTATION

IRIG-B COMMUNICATION DIAGRAM

DRAWN BY SMW DATE 11-18
APPROVED BY PDK DATE 11-18

DWG NO. WRC-E-012

REVISION 1

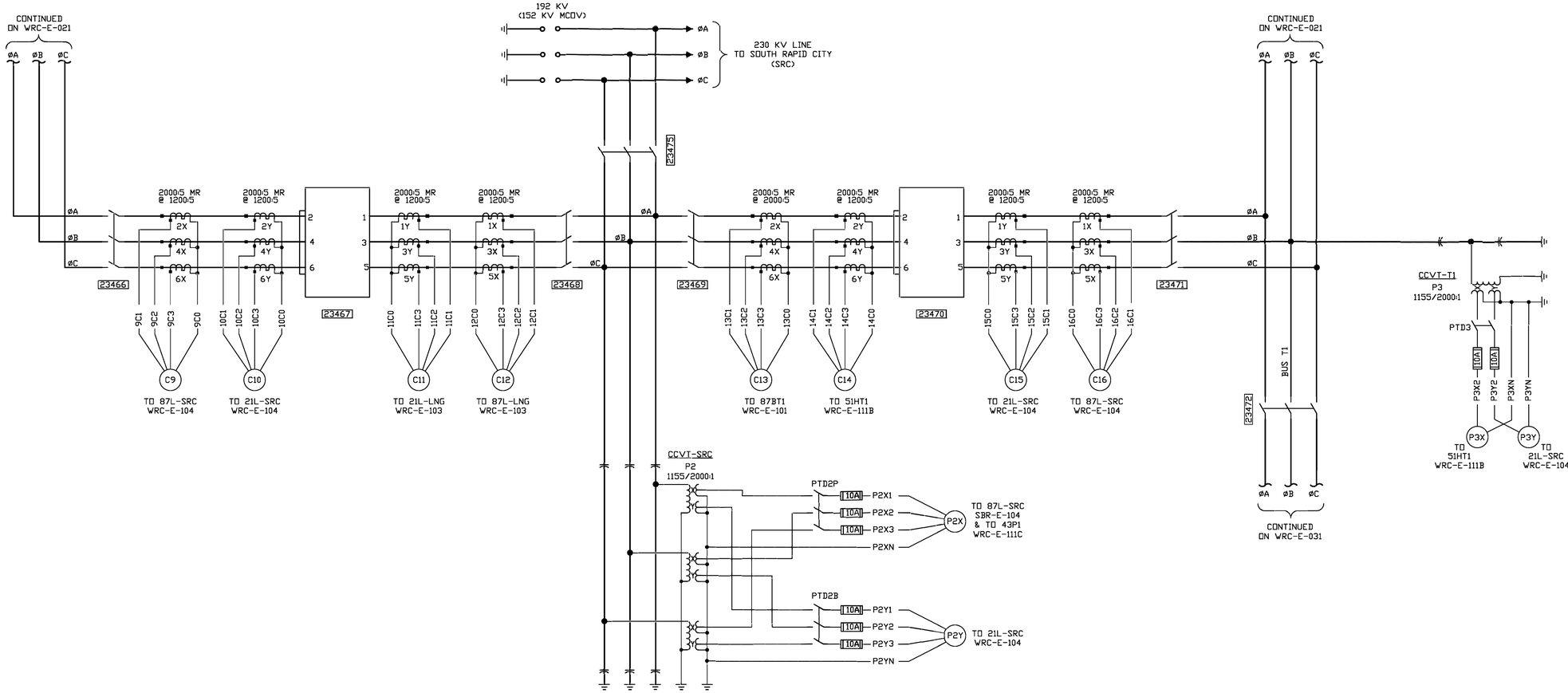

P:\04023\00\DWG\RECORD\WRC\CAD\WRC-E-020.DWG

DGR ENGINEERING
ROCK RAPIDS, IOWA
(712) 472-2531

DATE	DRAWN BY	NO.	APPROVED BY	REVISION DESCRIPTION
06-20	KLV	1	PDK	CONFORMING TO CONSTRUCTION RECORDS
10-19	SMW	0	PDK	FOR CONSTRUCTION

BLACK HILLS ENERGY

WEST RAPID CITY SUBSTATION

THREE LINE DIAGRAM
230 kV

DRAWN BY SMW DATE 11-18
APPROVED BY PDK DATE 11-18

DWG NO. WRC-E-020 REVISION 1

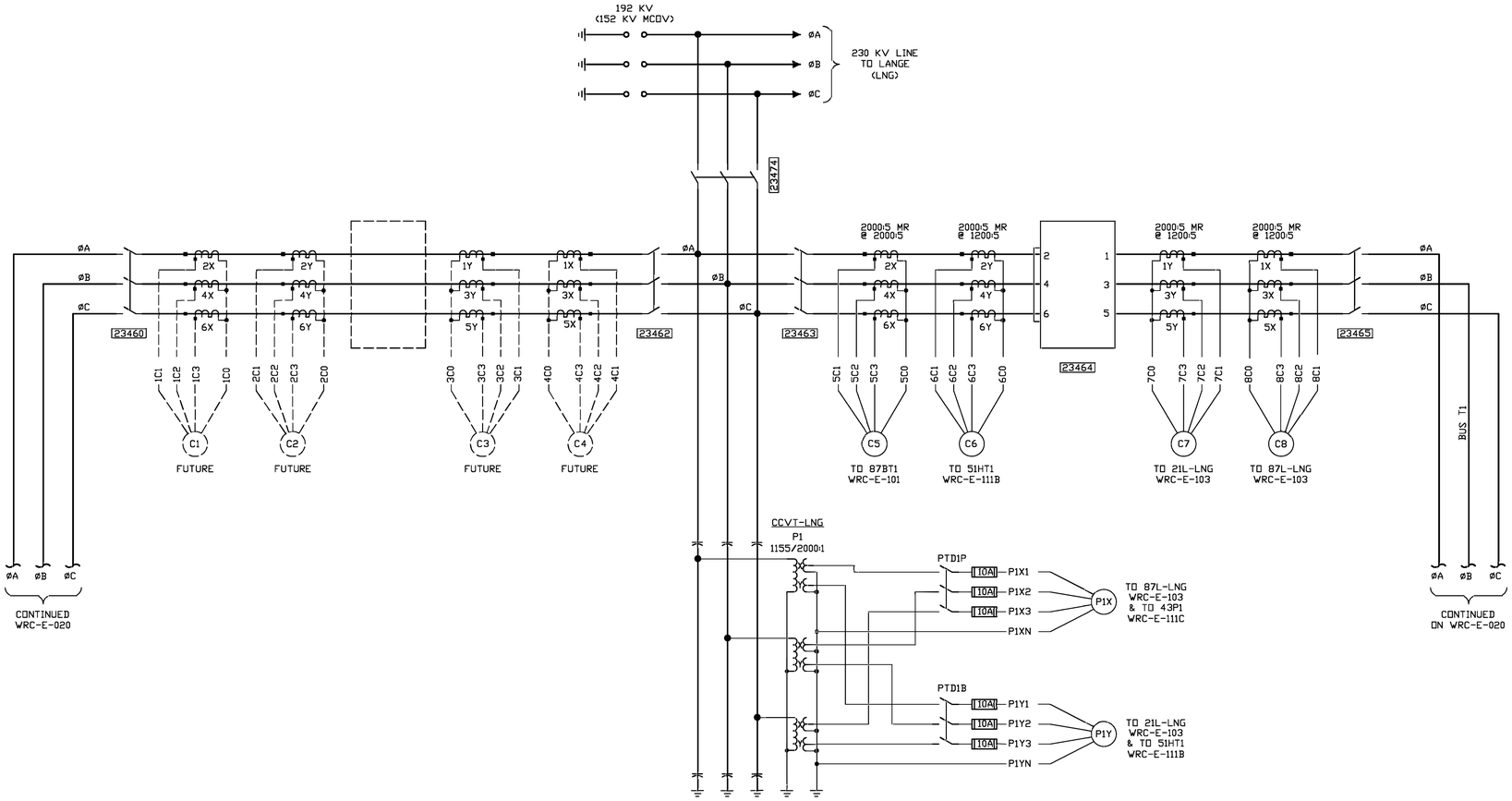

P:\04233\00\DWG\RECORD\WRC\CAD\WRC-E-021.DWG

DATE	DRAWN BY	NO.	APPROVED BY	REVISION DESCRIPTION
06-20	KLV	1	PDK	CONFORMING TO CONSTRUCTION RECORDS
10-19	SMW	0	PDK	FOR CONSTRUCTION

BLACK HILLS ENERGY

WEST RAPID CITY SUBSTATION

THREE LINE DIAGRAM
230 kV

DRAWN BY SMW DATE 11-18
APPROVED BY PDK DATE 11-18

DWG NO. WRC-E-021 REVISION 1

DGR ENGINEERING
ROCK RAPIDS, IOWA
(712) 472-2531

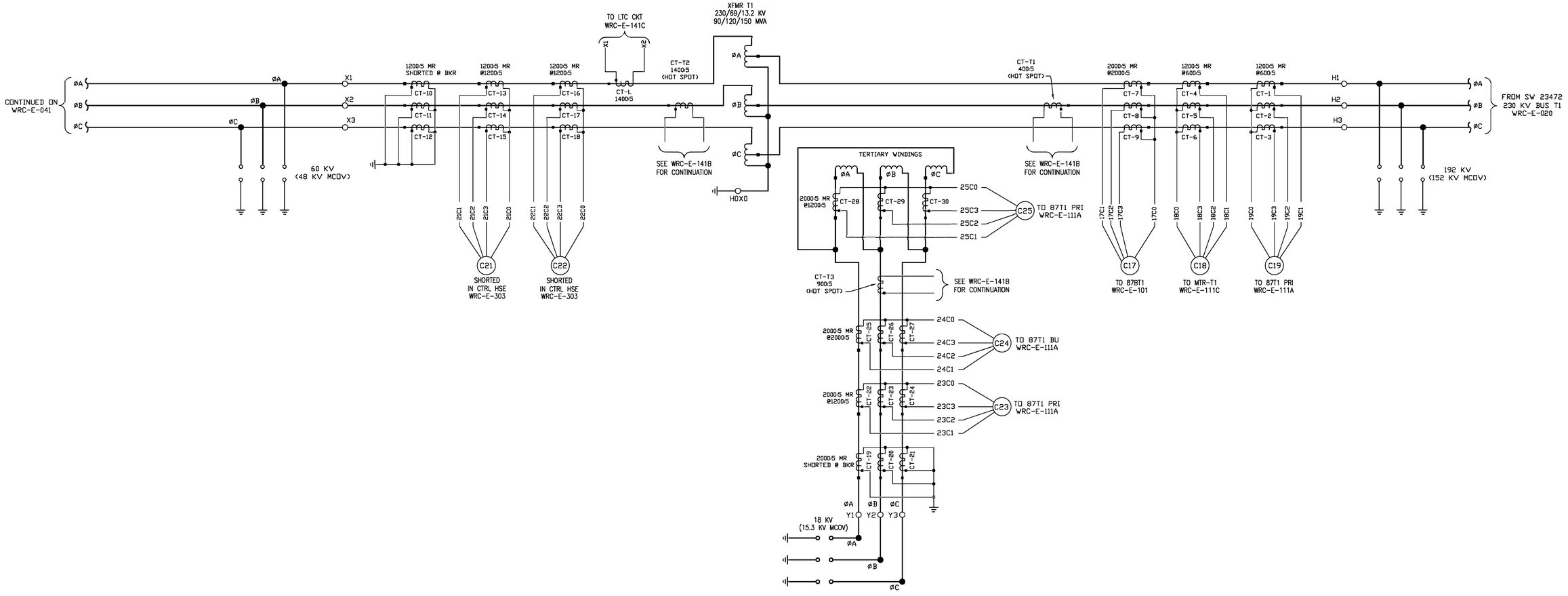

P:\04023\001\DWG\RECORD\WRC\CAD\WRC-E-031.DWG

DGR ENGINEERING
ROCK RAPIDS, IOWA
(712) 472-2531

DATE	DRAWN BY	NO.	APPROVED BY	REVISION DESCRIPTION
06-20	KLV	1	PDK	CONFORMING TO CONSTRUCTION RECORDS
10-19	SMW	0	PDK	FOR CONSTRUCTION

BLACK HILLS ENERGY

WEST RAPID CITY SUBSTATION
THREE LINE DIAGRAM
230/69 kV XFMR T1

DRAWN BY SMW DATE 11-18
APPROVED BY PDK DATE 11-18
DWG NO. WRC-E-031
SECTION 1 NO.

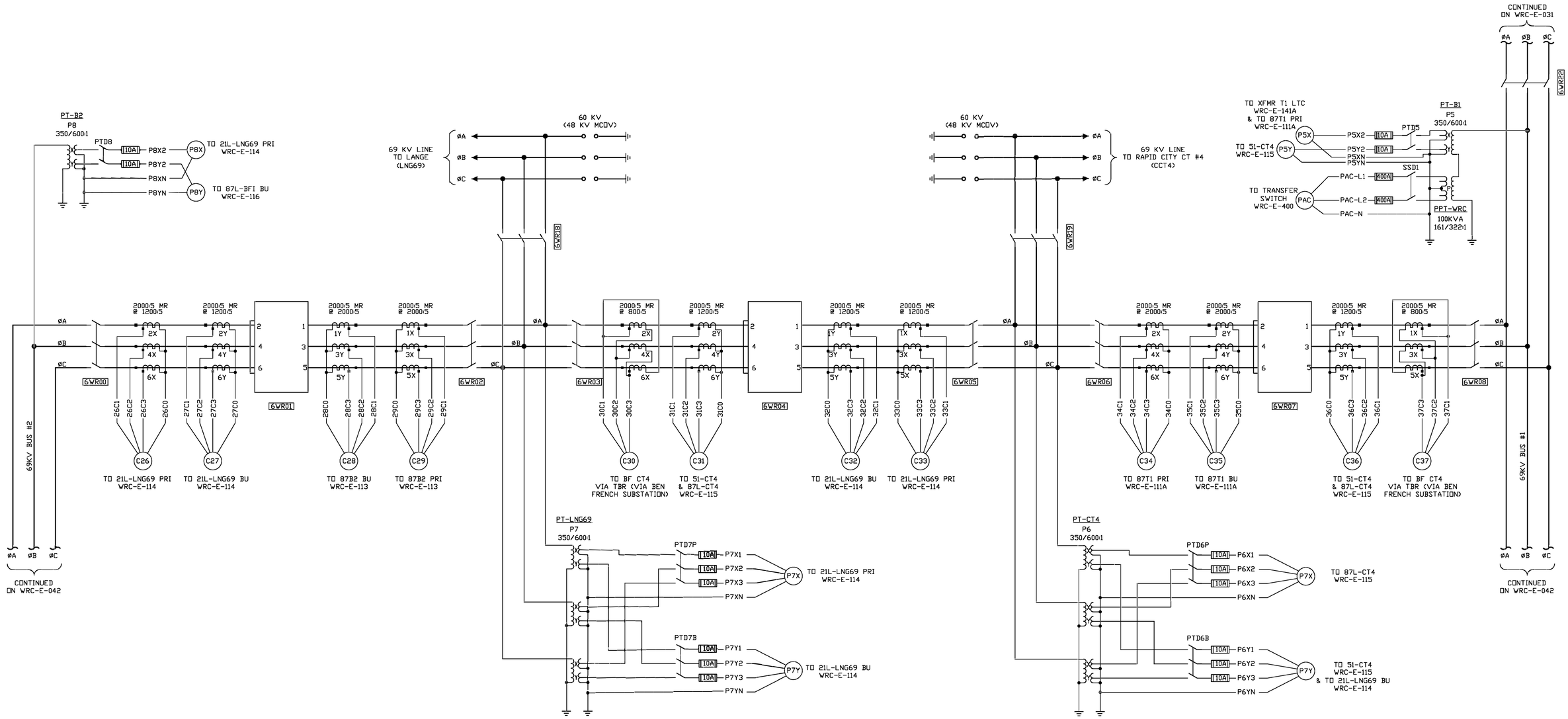

P:\04023\00\DWG\RECORD\WRCCAD\WRC-E-041.DWG

DGR ENGINEERING
ROCK RAPIDS, IOWA
(712) 472-2531

DATE	DRAWN BY	NO.	APPROVED BY	REVISION DESCRIPTION
06-20	KLV	1	PJK	CONFORMING TO CONSTRUCTION RECORDS
10-19	SMW	0	PJK	FOR CONSTRUCTION

BLACK HILLS ENERGY

WEST RAPID CITY SUBSTATION

THREE LINE DIAGRAM
69 kV BAY 1

DRAWN BY SMW DATE 11-18
APPROVED BY PJK DATE 11-18

DWG NO. WRC-E-041 REVISION 1

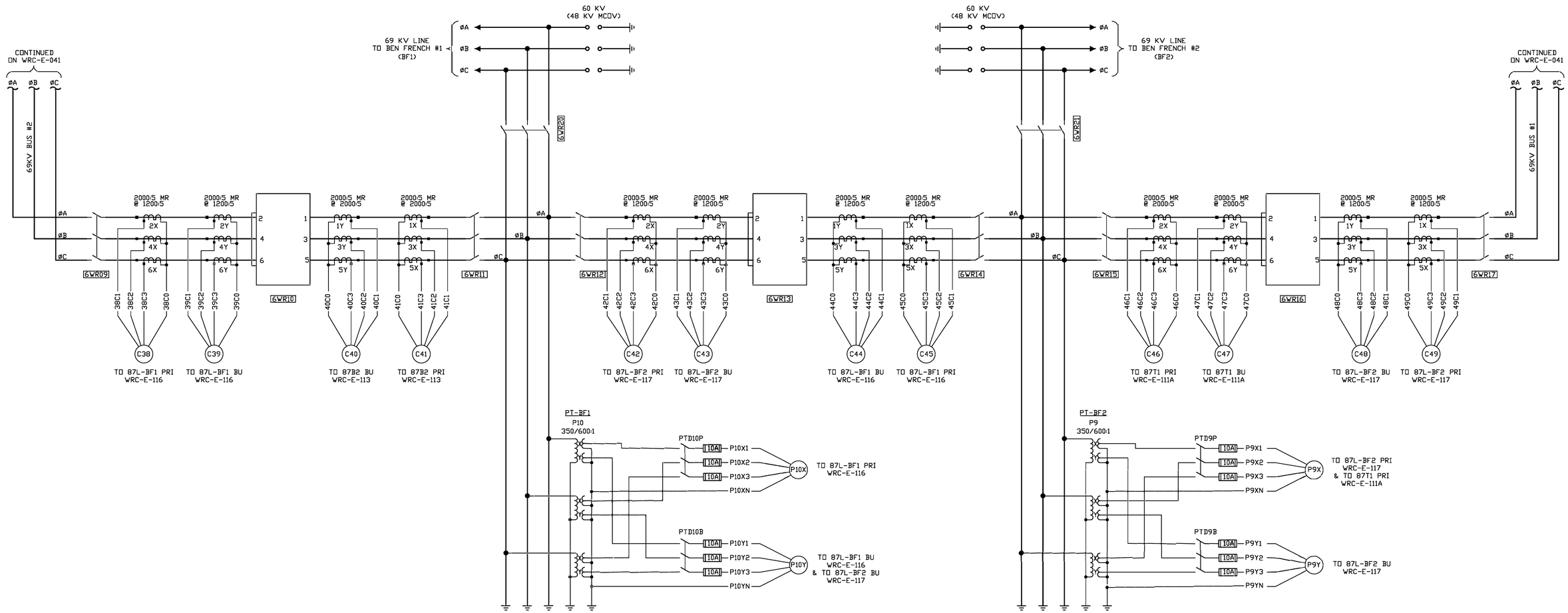

P:\04023\00\DWG\RECORD\WRC\CAD\WRC-E-042.DWG

DGR ENGINEERING
ROCK RAPIDS, IOWA
(712) 472-2531

DATE	DRAWN BY	NO.	APPROVED BY	REVISION DESCRIPTION
06-20	KLV	1	PJK	CONFORMING TO CONSTRUCTION RECORDS
10-19	SMW	0	PJK	FOR CONSTRUCTION

BLACK HILLS ENERGY

WEST RAPID CITY SUBSTATION

THREE LINE DIAGRAM
69 kV BAY 2

DRAWN BY SMW DATE 11-18
APPROVED BY PJK DATE 11-18

DWG NO. WRC-E-042 REVISION 1

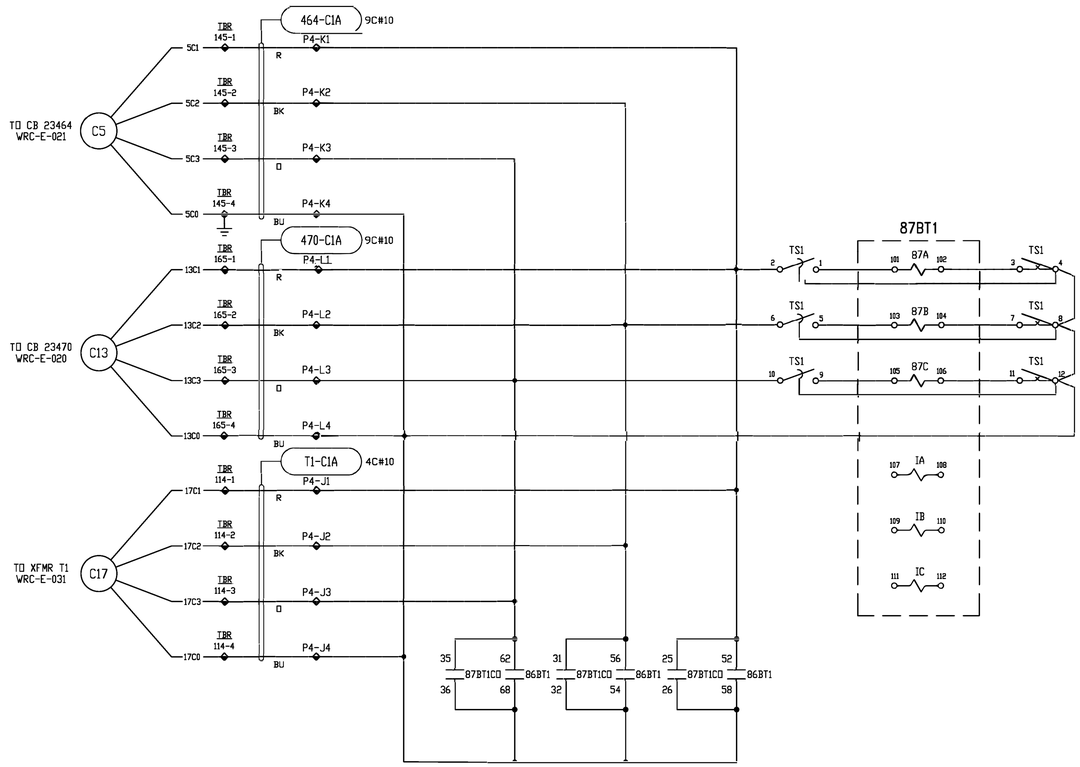

NOTES:
1. ALL WIRING TO BE #12, UNLESS NOTED.
2. MULTI CONDUCTOR CABLE TO BE XHHW-2 WITH CPE JACKET.

LEGEND:
◇ INDICATES TERMINAL POINT
◆ INDICATES SHORTING TYPE TERMINAL POINT

P:\04023\00\DWG\RECORD\WRC\CAD\WRC-E-101.DWG

DGR ENGINEERING
ROCK RAPIDS, IOWA
(712) 472-2531

DATE	DRAWN BY	NO.	APPROVED BY	REVISION DESCRIPTION
06-20	KLV	1	PDK	CONFORMING TO CONSTRUCTION RECORDS
10-19	SMW	0	PDK	FOR CONSTRUCTION

BLACK HILLS ENERGY

WEST RAPID CITY SUBSTATION

AC SCHEMATIC
230 kV BUS T1

DRAWN BY SMW DATE 1-19
APPROVED BY PDK DATE 1-19

DWG NO. WRC-E-101

REVISION 1

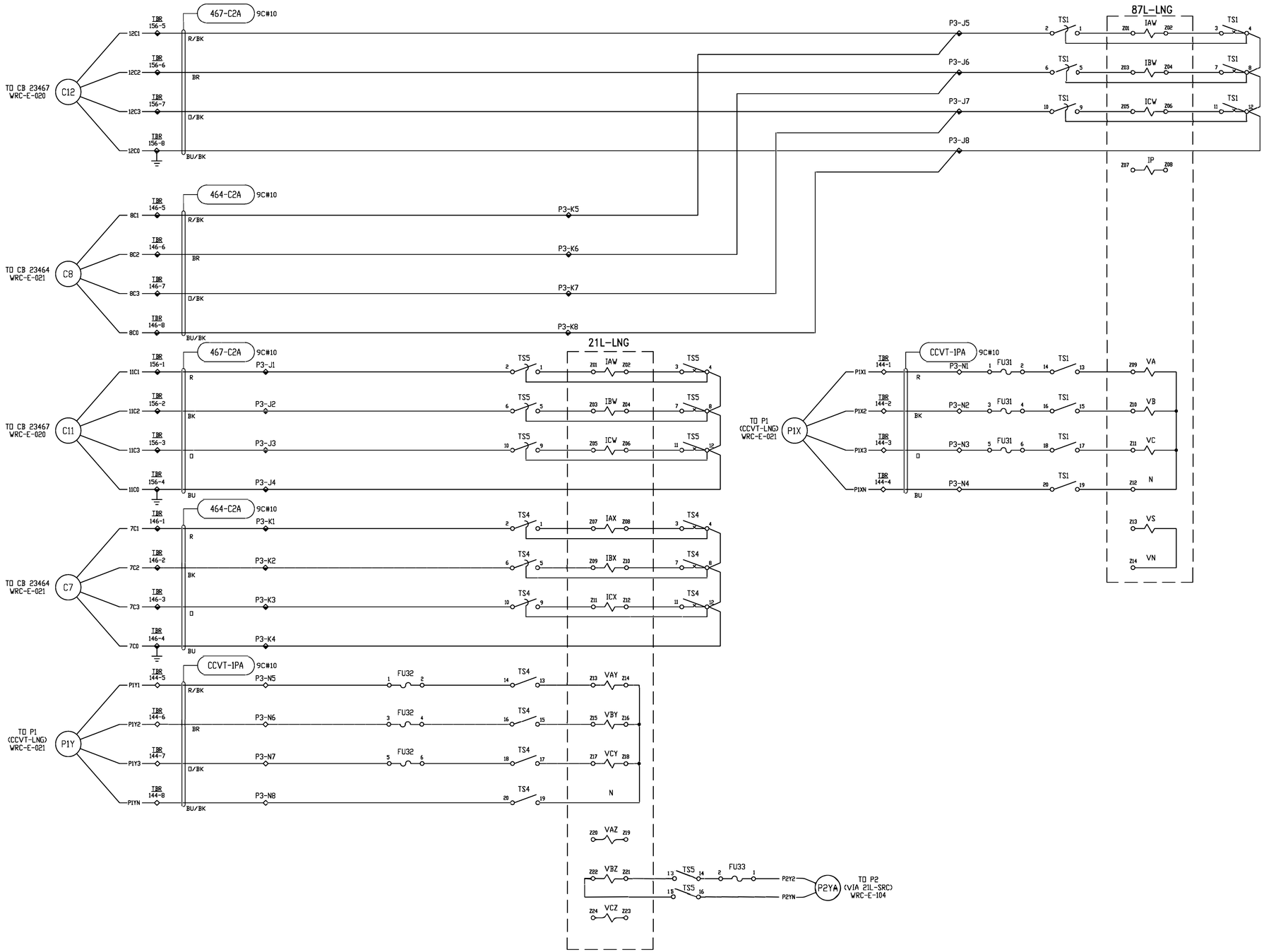

P:\04233\00\DWG\RECORD\WRC\CAD\WRC-E-103.DWG

NOTES:
1. ALL WIRING TO BE #12, UNLESS NOTED.
2. MULTI CONDUCTOR CABLE TO BE XHHW-2 WITH CPE JACKET.

LEGEND:
◇ INDICATES TERMINAL POINT
◆ INDICATES SHORTING TYPE TERMINAL POINT

DGR ENGINEERING
ROCK RAPIDS, IOWA
(712) 472-2531

DATE	DRAWN BY	NO.	APPROVED BY	REVISION DESCRIPTION
06-20	KLV	1	PDK	CONFORMING TO CONSTRUCTION RECORDS
10-19	SMW	0	PDK	FOR CONSTRUCTION

BLACK HILLS ENERGY

WEST RAPID CITY SUBSTATION
AC SCHEMATIC
230 kV LANGE LINE (LNG)

DRAWN BY SMW DATE 1-19
APPROVED BY PDK DATE 1-19
DWG NO. WRC-E-103
SECTION 1 NO

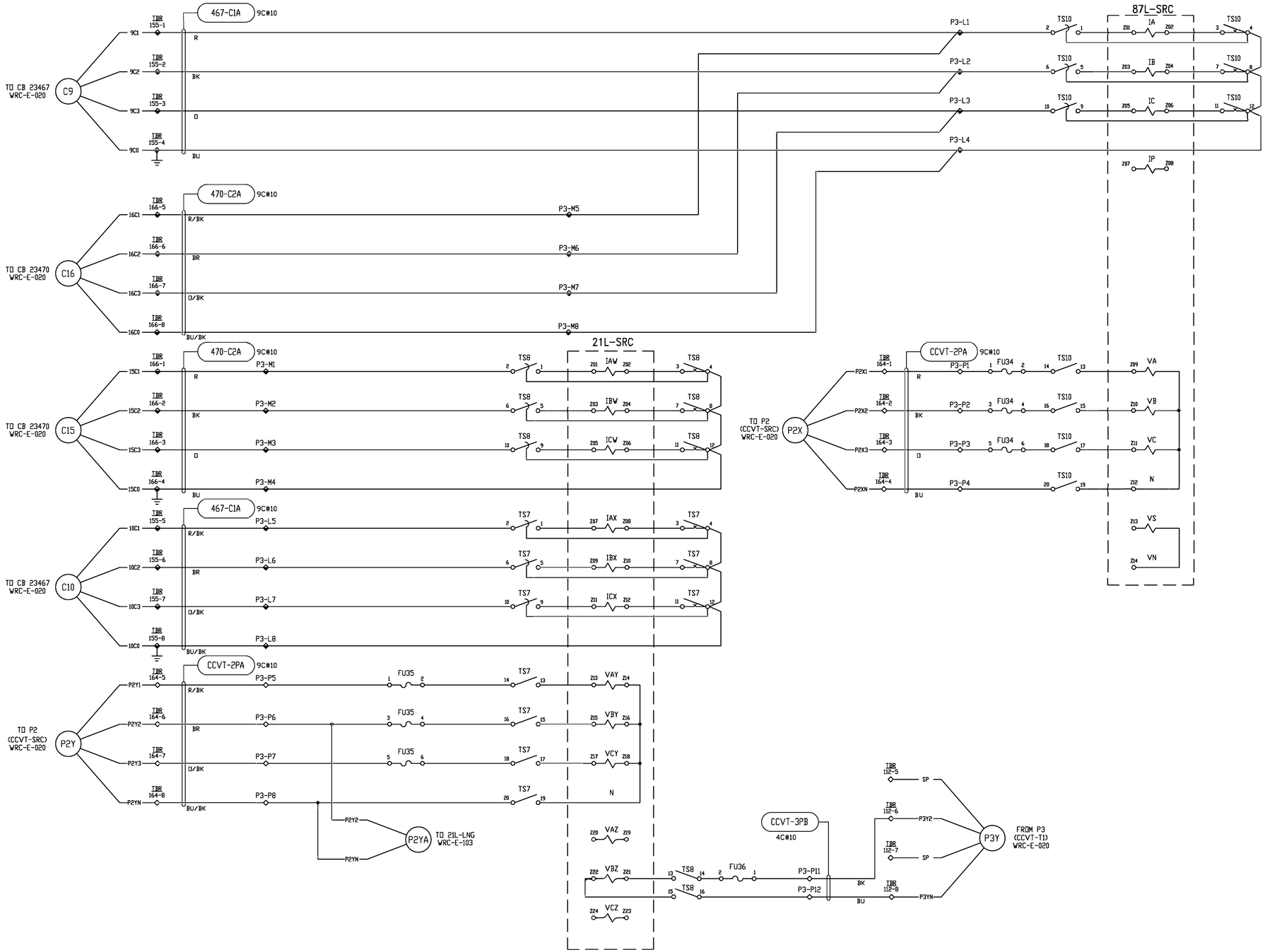

NOTES:
1. ALL WIRING TO BE #12, UNLESS NOTED.
2. MULTI CONDUCTOR CABLE TO BE XHHW-2 WITH CPE JACKET.

LEGEND:
◇ INDICATES TERMINAL POINT
◆ INDICATES SHORTING TYPE TERMINAL POINT

DGR ENGINEERING
ROCK RAPIDS, IOWA
(712) 472-2531

DATE	DRAWN BY	NO.	APPROVED BY	REVISION DESCRIPTION
06-20	KLV	1	PDK	CONFORMING TO CONSTRUCTION RECORDS
10-19	SMW	0	PDK	FOR CONSTRUCTION

BLACK HILLS ENERGY

WEST RAPID CITY SUBSTATION
AC SCHEMATIC
230 kV SOUTH RAPID CITY LINE (SRC)

DRAWN BY SMW DATE 1-19
APPROVED BY PDK DATE 1-19

DWG NO. WRC-E-104 REVISION NO. 1

P:\042330\DWG\RECORD\WRC\CAD\WRC-E-104.DWG

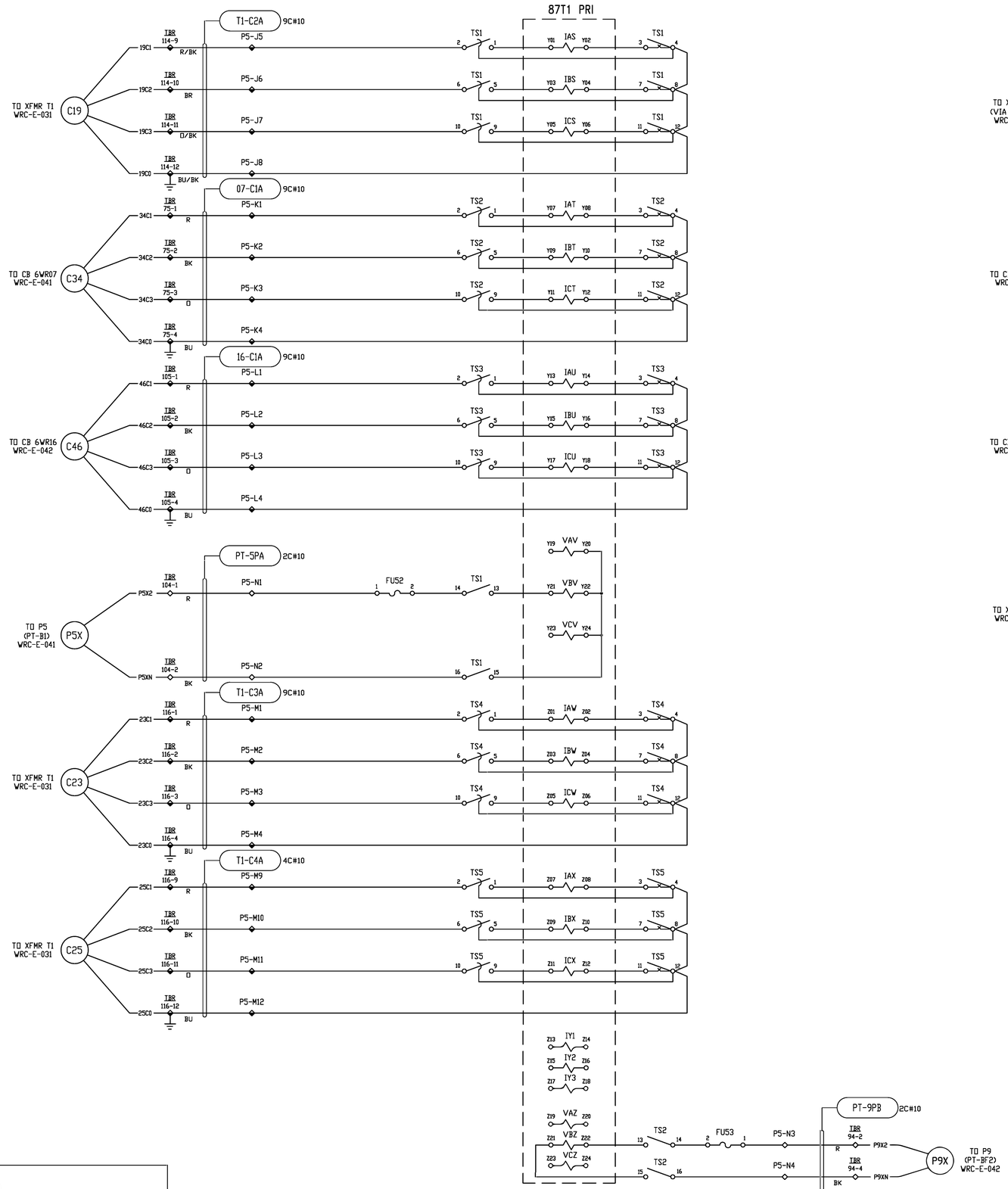

NOTES:
1. ALL WIRING TO BE #12, UNLESS NOTED.
2. MULTI CONDUCTOR CABLE TO BE XHHW-2 WITH CPE JACKET.

LEGEND:
◇ INDICATES TERMINAL POINT
◆ INDICATES SHORTING TYPE TERMINAL POINT

DATE	DRAWN BY	NO.	APPROVED BY	REVISION DESCRIPTION
06-20	KLV	1	PJK	CONFORMING TO CONSTRUCTION RECORDS
10-19	SMW	0	PJK	FOR CONSTRUCTION

DGR ENGINEERING
ROCK RAPIDS, IOWA
(712) 472-2531

BLACK HILLS ENERGY

WEST RAPID CITY SUBSTATION
AC SCHEMATIC
XFMR T1 DIFFERENTIAL PROTECTION

DRAWN BY SMW DATE 1-19
APPROVED BY PJK DATE 1-19
DWG NO. WRC-E-111A REVISION NO. 1

P:\0423300\DWG\RECORD\WRC\CAD\WRC-E-111A.DWG

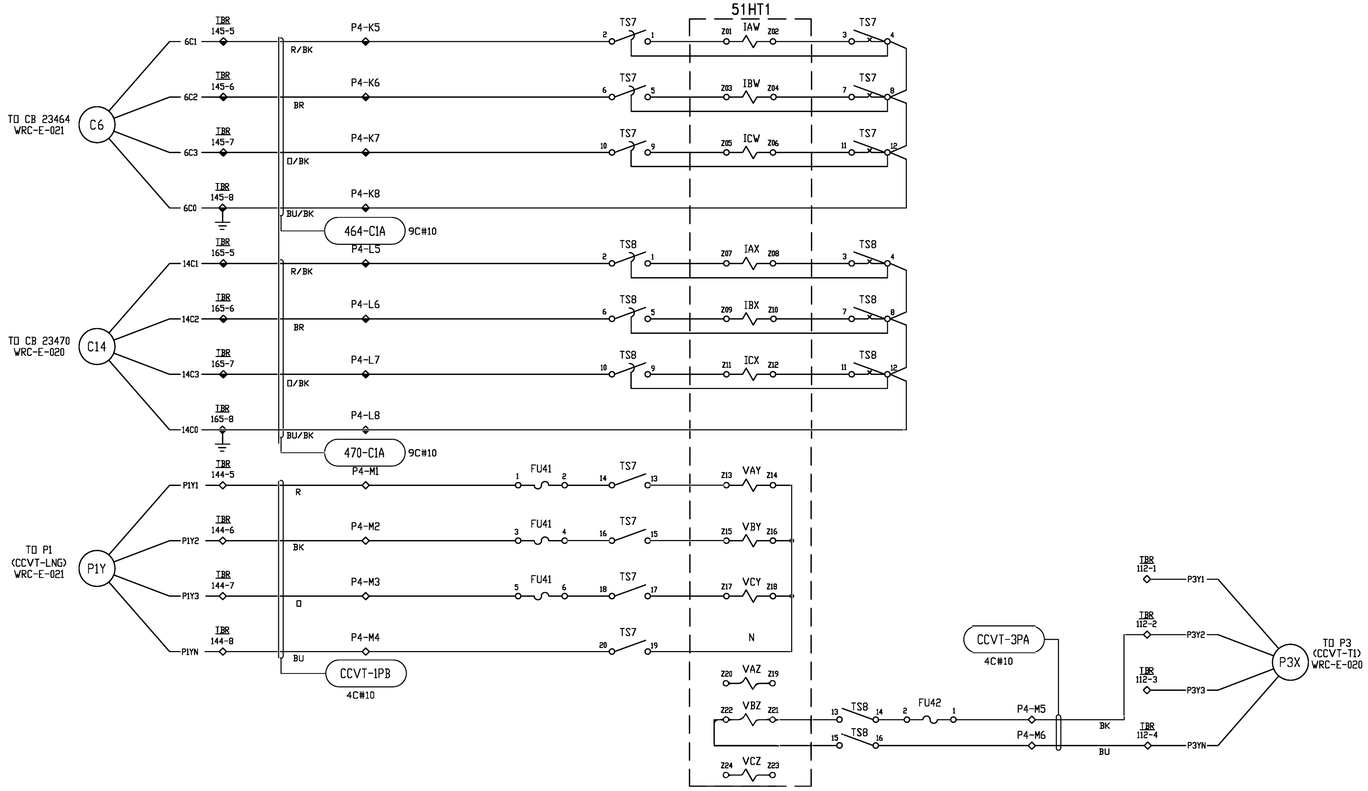

NOTES:
1. ALL WIRING TO BE #12, UNLESS NOTED.
2. MULTI CONDUCTOR CABLE TO BE XHHW-2 WITH CPE JACKET.

LEGEND:
◇ INDICATES TERMINAL POINT
◆ INDICATES SHORTING TYPE TERMINAL POINT

DATE	DRAWN BY	NO.	APPROVED BY	REVISION DESCRIPTION
06-20	KLV	1	PDK	CONFORMING TO CONSTRUCTION RECORDS
10-19	SMW	0	PDK	FOR CONSTRUCTION

BLACK HILLS ENERGY

WEST RAPID CITY SUBSTATION

AC SCHEMATIC
XFMR T1 OC PROTECTION

DRAWN BY SMW DATE 1-19
APPROVED BY PDK DATE 1-19

DWG NO. WRC-E-111B REVISION 1

DGR ENGINEERING
ROCK RAPIDS, IOWA
(712) 472-2531

P:\04233\00\DWG\RECORD\WRC\CAD\WRC-E-111B.DWG

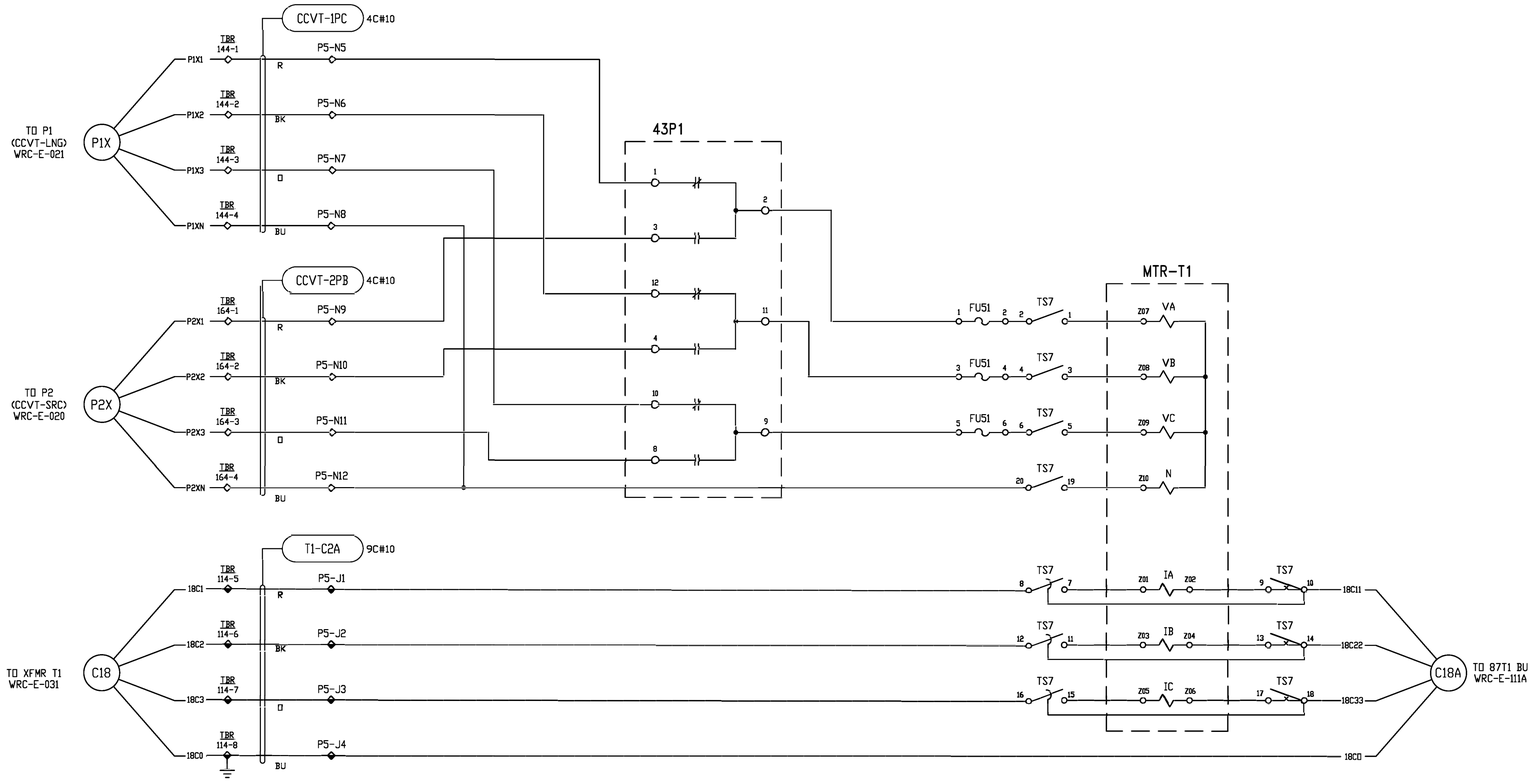

NOTES:
1. ALL WIRING TO BE #12, UNLESS NOTED.
2. MULTI CONDUCTOR CABLE TO BE XHHW-2 WITH CPE JACKET.

LEGEND:
◇ INDICATES TERMINAL POINT
◆ INDICATES SHORTING TYPE TERMINAL POINT

DATE	DRAWN BY	NO.	APPROVED BY	REVISION DESCRIPTION
06-20	KLV	1	PJK	CONFORMING TO CONSTRUCTION RECORDS
10-19	SMW	0	PJK	FOR CONSTRUCTION

BLACK HILLS ENERGY

WEST RAPID CITY SUBSTATION

AC SCHEMATIC
XFMR T1 METERING

DRAWN BY SMW DATE 1-19
APPROVED BY PJK DATE 1-19

DWG NO. WRC-E-111C REVISION NO. 1

DGR ENGINEERING
ROCK RAPIDS, IOWA
(712) 472-2531

P:\042319\00\DWGRECORD\WRCCAD\WRC-E-111C.DWG

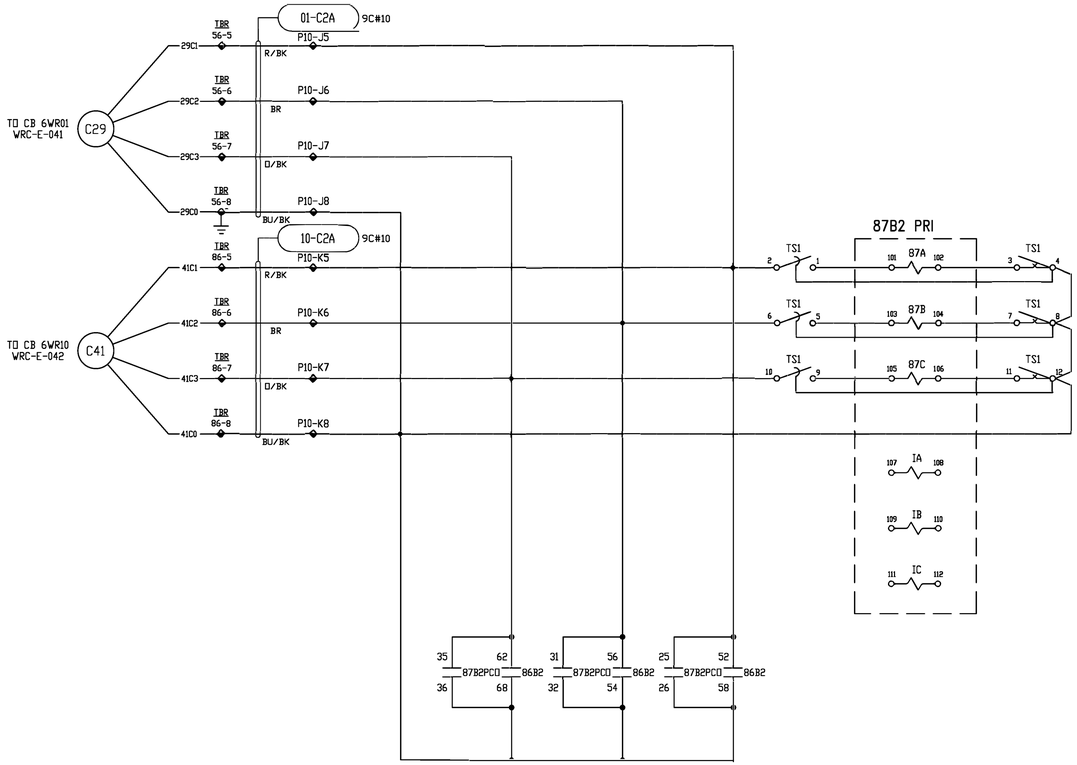

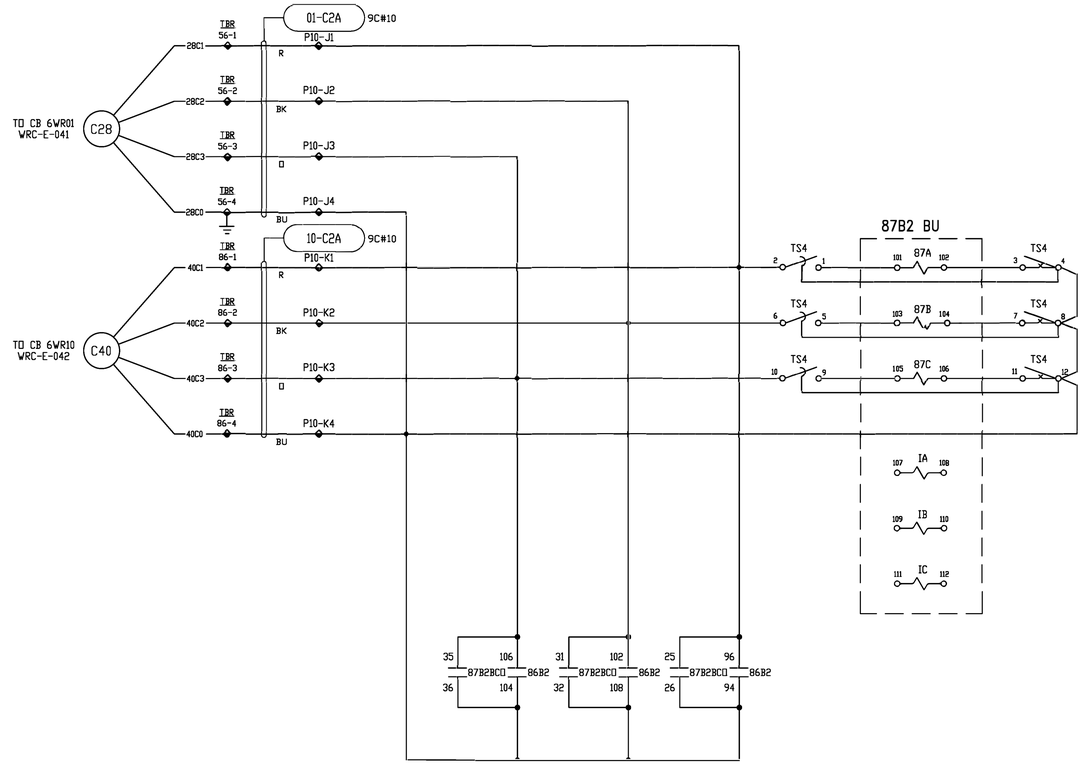

NOTES:
1. ALL WIRING TO BE #12, UNLESS NOTED.
2. MULTI CONDUCTOR CABLE TO BE XHHW-2 WITH CPE JACKET.

LEGEND:
◇ INDICATES TERMINAL POINT
◆ INDICATES SHORTING TYPE TERMINAL POINT

P:\04233\00\DWG\RECORD\WRC\CAD\WRC-E-113.DWG

DGR ENGINEERING
ROCK RAPIDS, IOWA
(712) 472-2531

DATE	DRAWN BY	NO.	APPROVED BY	REVISION DESCRIPTION
06-20	KLV	1	PDK	CONFORMING TO CONSTRUCTION RECORDS
10-19	SMW	0	PDK	FOR CONSTRUCTION

BLACK HILLS ENERGY

WEST RAPID CITY SUBSTATION

AC SCHEMATIC
69 kV BUS 2

DRAWN BY SMW DATE 1-19
APPROVED BY PDK DATE 1-19

DWG NO. WRC-E-113 REVISION NO. 1

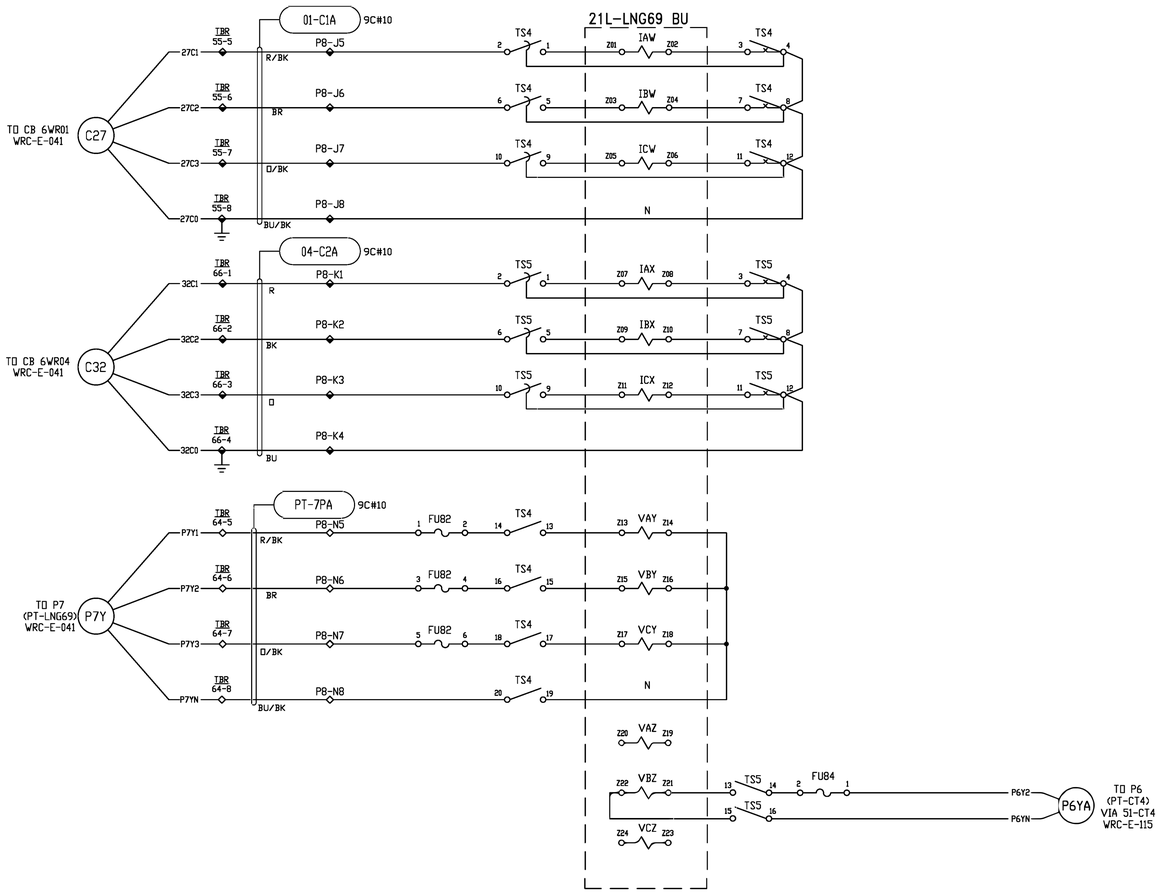

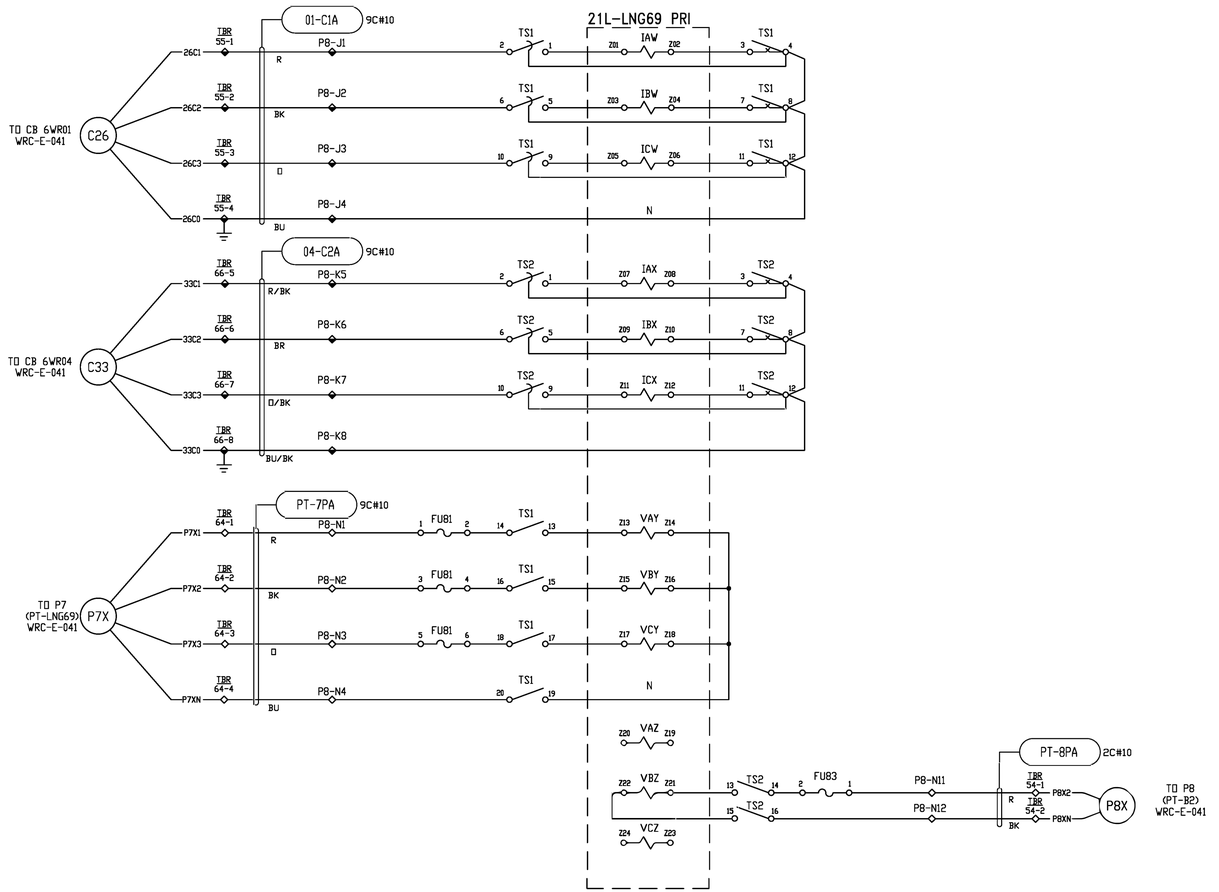

P:\0423300\DWG\RECORD\WRC\CAD\WRC-E-114.DWG

NOTES:
1. ALL WIRING TO BE #12, UNLESS NOTED.
2. MULTI CONDUCTOR CABLE TO BE XHHW-2 WITH CPE JACKET.

LEGEND:
◇ INDICATES TERMINAL POINT
◆ INDICATES SHORTING TYPE TERMINAL POINT

DGR ENGINEERING
ROCK RAPIDS, IOWA
(712) 472-2531

DATE	DRAWN BY	NO.	APPROVED BY	REVISION DESCRIPTION
06-20	KLV	1	PDK	CONFORMING TO CONSTRUCTION RECORDS
10-19	SMW	0	PDK	FOR CONSTRUCTION

BLACK HILLS ENERGY

WEST RAPID CITY SUBSTATION
AC SCHEMATIC
69 kV LANGE LINE (LNG69)

DRAWN BY SMW DATE 1-19
APPROVED BY PDK DATE 1-19
DWG NO. WRC-E-114
REVISION NO. 1

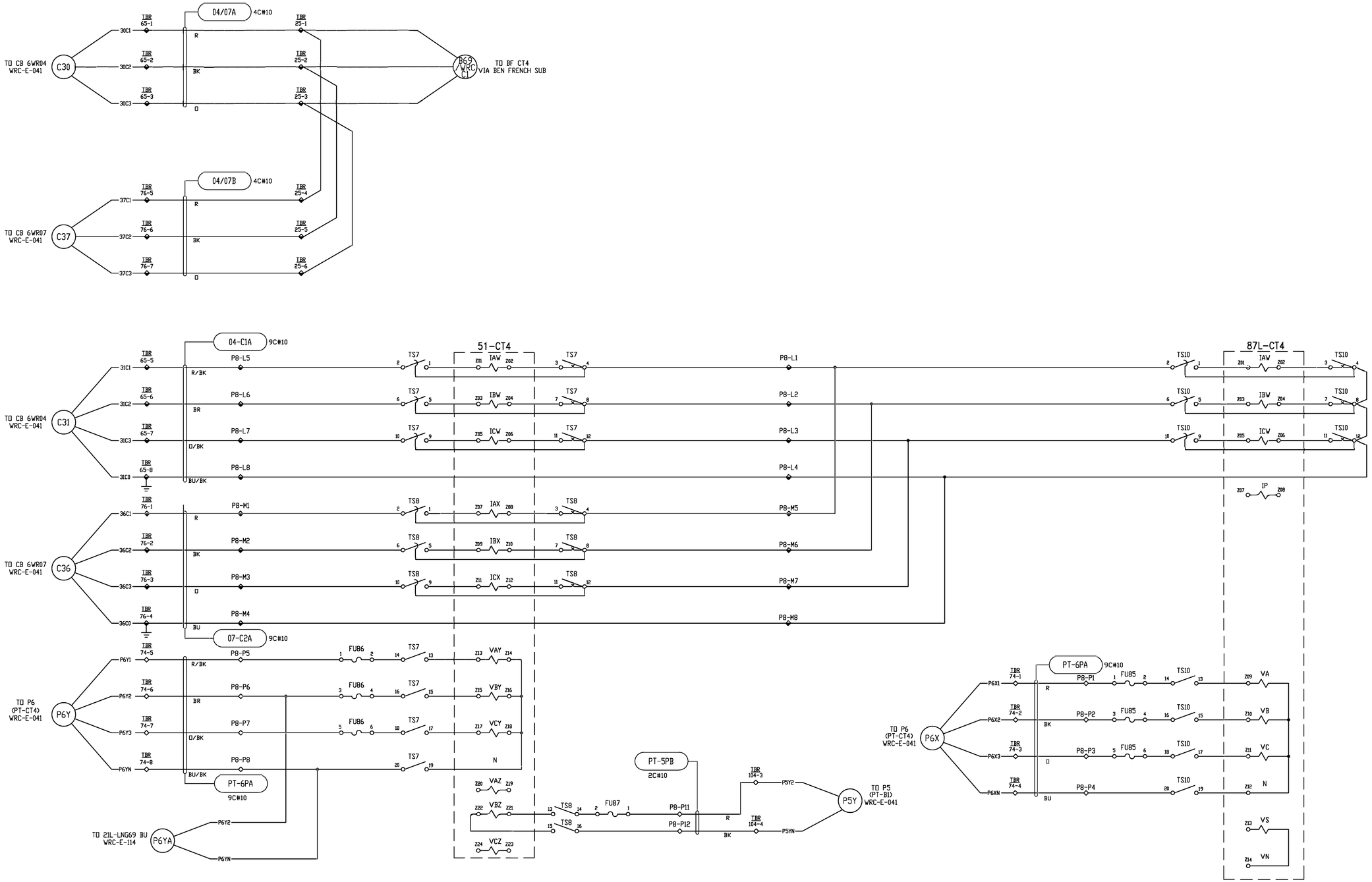

P:\04233\00\DWG\RECORD\WRCCAD\WRC-E-115.DWG

NOTES:
1. ALL WIRING TO BE #12, UNLESS NOTED.
2. MULTI CONDUCTOR CABLE TO BE XHHW-2 WITH CPE JACKET.

LEGEND:
◇ INDICATES TERMINAL POINT
◆ INDICATES SHORTING TYPE TERMINAL POINT

DGR ENGINEERING
ROCK RAPIDS, IOWA
(712) 472-2531

DATE	DRAWN BY	NO.	APPROVED BY	REVISION DESCRIPTION
06-20	KLV	1	PDK	CONFORMING TO CONSTRUCTION RECORDS
10-19	SMW	0	PDK	FOR CONSTRUCTION

BLACK HILLS ENERGY

WEST RAPID CITY SUBSTATION
AC SCHEMATIC
69 kV RAPID CITY CT #4 LINE (CT4)

DRAWN BY SMW DATE 1-19
APPROVED BY PDK DATE 1-19
DWG NO. WRC-E-115
SECTION 1 REV

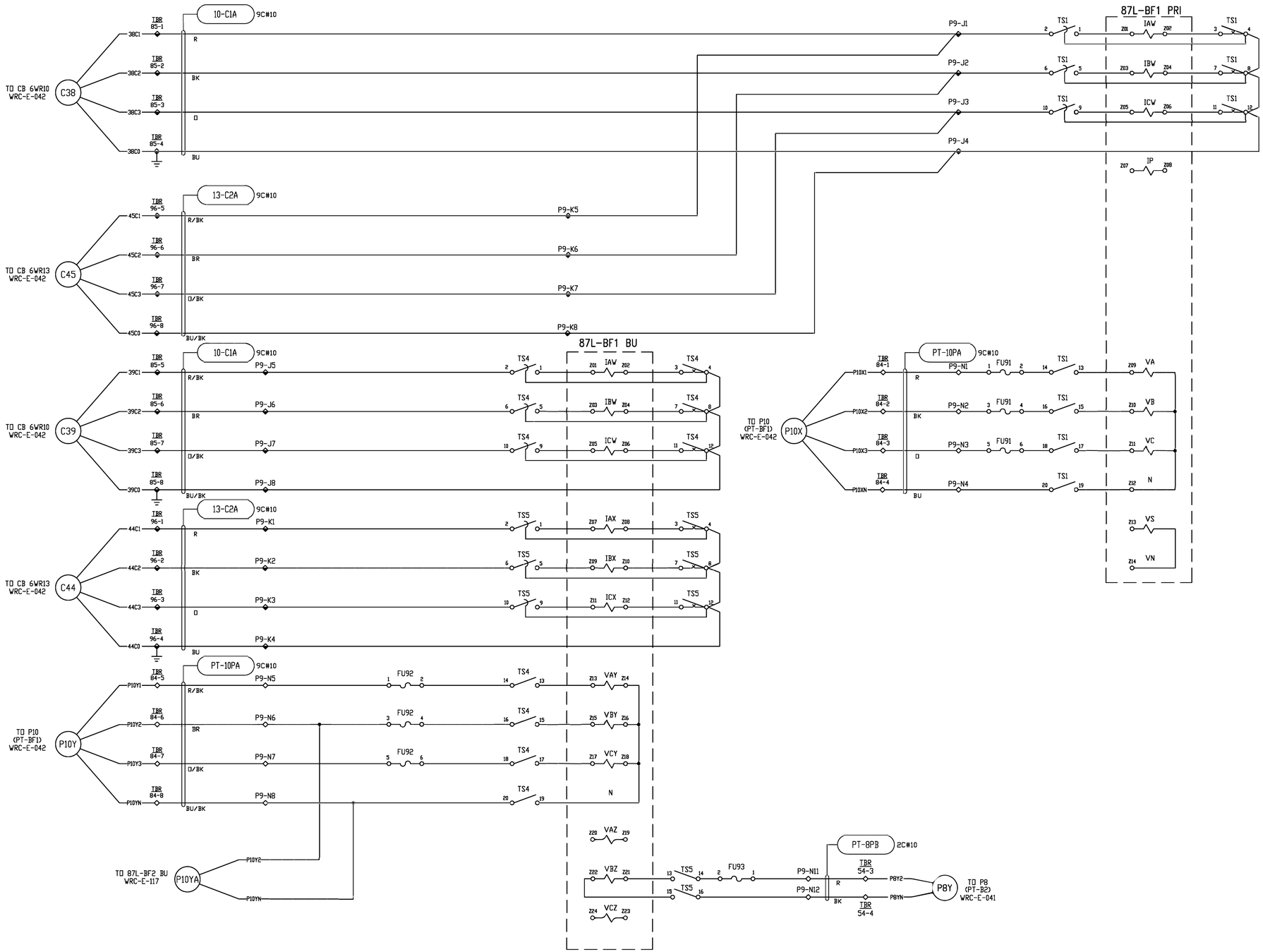

NOTES:
1. ALL WIRING TO BE #12, UNLESS NOTED.
2. MULTI CONDUCTOR CABLE TO BE XHHW-2 WITH CPE JACKET.

LEGEND:
◇ INDICATES TERMINAL POINT
◆ INDICATES SHORTING TYPE TERMINAL POINT

DGR ENGINEERING
ROCK RAPIDS, IOWA
(712) 472-2531

DATE	DRAWN BY	NO.	APPROVED BY	REVISION DESCRIPTION
06-20	KLV	1	PDK	CONFORMING TO CONSTRUCTION RECORDS
10-19	SMW	0	PDK	FOR CONSTRUCTION

BLACK HILLS ENERGY
WEST RAPID CITY SUBSTATION
AC SCHEMATIC
69 kV BEN FRENCH #1 LINE (BF1)

DRAWN BY SMW DATE 1-19
APPROVED BY PDK DATE 1-19
DWG NO. WRC-E-116
SECTION 1 NO.

P:\04023\00\DWG\RECORD\WRC\CAD\WRC-E-116.DWG

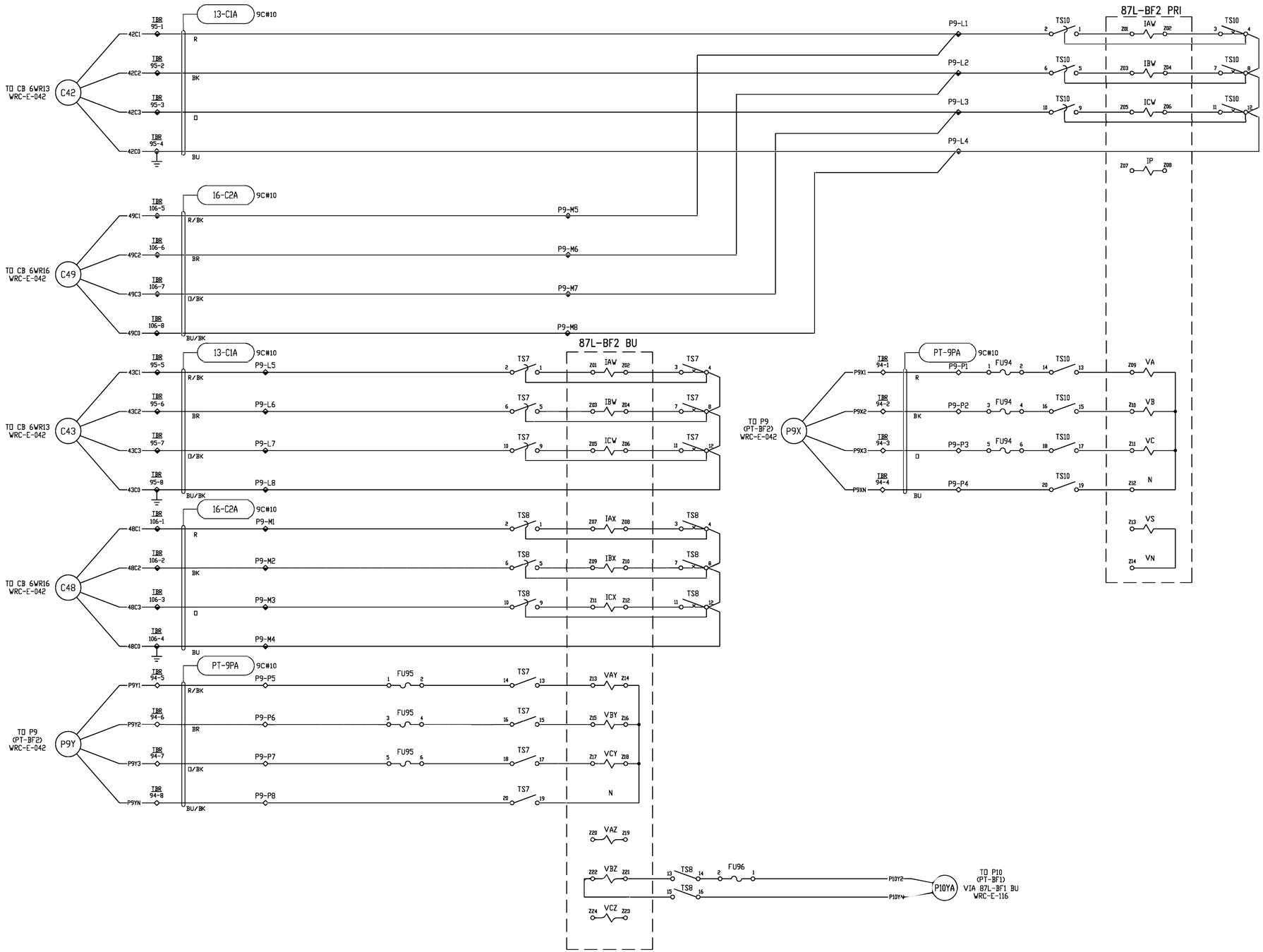

P:\04023\00\DWG\RECORD\WRC\CAD\WRC-E-117.DWG

NOTES:
1. ALL WIRING TO BE #12, UNLESS NOTED.
2. MULTI CONDUCTOR CABLE TO BE XHHW-2 WITH CPE JACKET.

LEGEND:
◇ INDICATES TERMINAL POINT
◆ INDICATES SHORTING TYPE TERMINAL POINT

DGR ENGINEERING
ROCK RAPIDS, IOWA
(712) 472-2531

DATE	DRAWN BY	NO.	APPROVED BY	REVISION DESCRIPTION
06-20	KLV	1	PDK	CONFORMING TO CONSTRUCTION RECORDS
10-19	SMW	0	PDK	FOR CONSTRUCTION

BLACK HILLS ENERGY

WEST RAPID CITY SUBSTATION
AC SCHEMATIC
69 kV BEN FRENCH #2 LINE (BF2)

DRAWN BY SMW DATE 1-19
APPROVED BY PDK DATE 1-19
DWG NO. WRC-E-117
SECTION 1 NO.

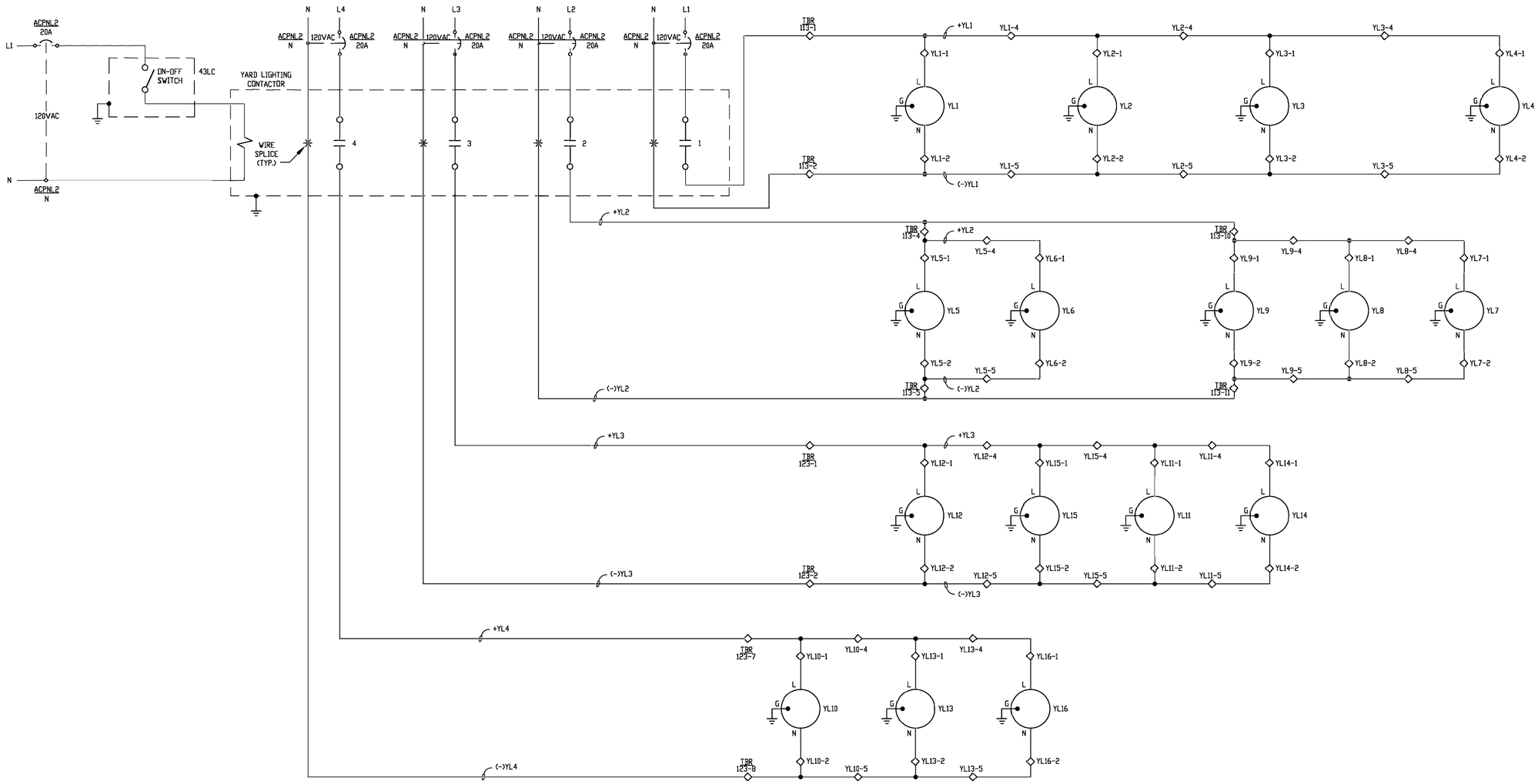

LEGEND:
◇ INDICATES TERMINAL POINT

DATE	DRAWN BY	NO.	APPROVED BY	REVISION DESCRIPTION
06-20	KLV	1	PDK	CONFORMING TO CONSTRUCTION RECORDS
10-19	SMW	0	PDK	FOR CONSTRUCTION

BLACK HILLS ENERGY

WEST RAPID CITY SUBSTATION

AC SCHEMATIC
YARD LIGHTS

DRAWN BY SMW DATE 1-19
APPROVED BY PDK DATE 1-19

DWG NO. WRC-E-120A REVISION 1

DGR ENGINEERING
ROCK RAPIDS, IOWA
(712) 472-2531

P:\04233\00\DWG\RECORD\WRC\CAD\WRC-E-120A.DWG

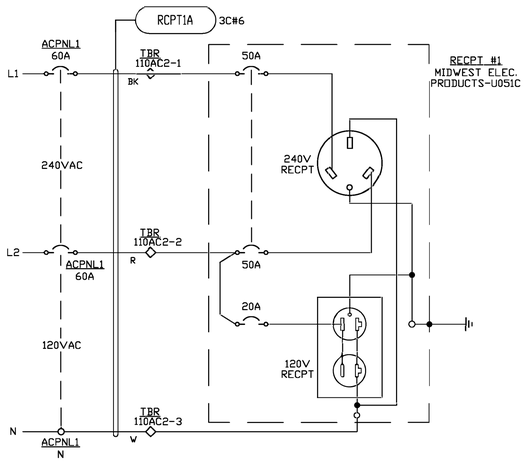

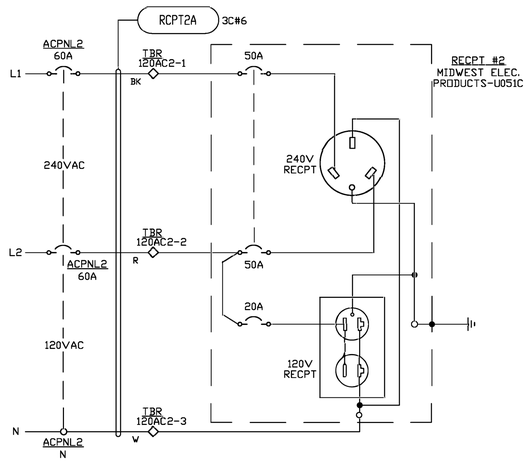

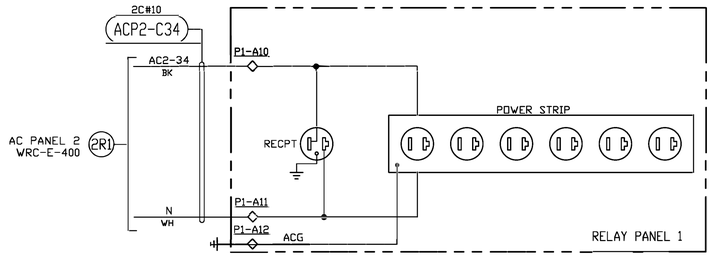

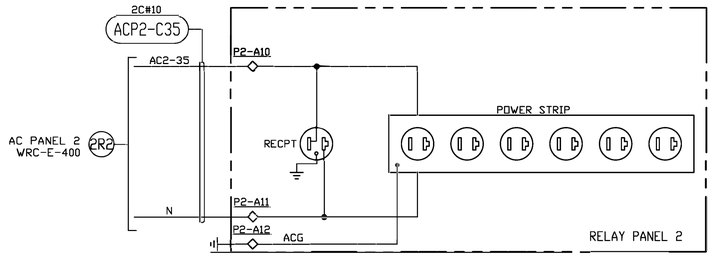

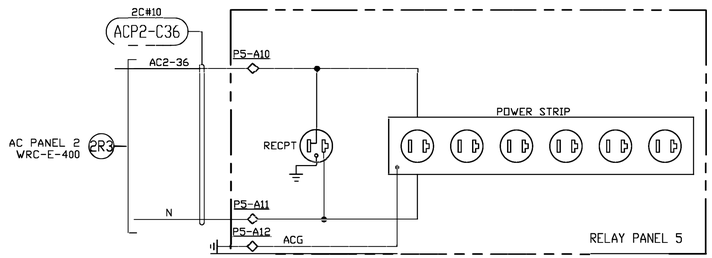

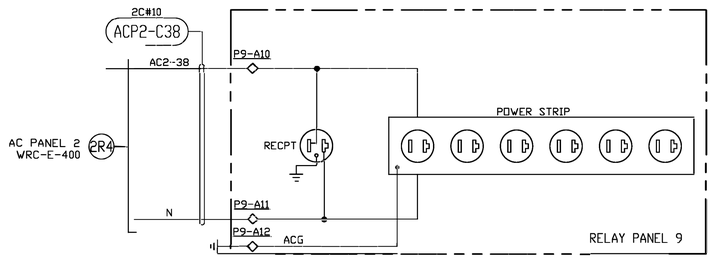

LEGEND:
◇ INDICATES TERMINAL POINT

DATE	DRAWN BY	NO.	APPROVED BY	REVISION DESCRIPTION
06-20	KLV	1	PDK	CONFORMING TO CONSTRUCTION RECORDS
10-19	SMW	0	PDK	FOR CONSTRUCTION

BLACK HILLS ENERGY

WEST RAPID CITY SUBSTATION

AC SCHEMATIC
PANEL AND YARD RECEPTACLES

DRAWN BY SMW DATE 1-19
APPROVED BY PDK DATE 1-19

DWG NO. WRC-E-120B REVISION 1

DGR ENGINEERING
ROCK RAPIDS, IOWA
(712) 472-2531

P:\04023300\DWG\RECORD\WRC\CAD\WRC-E-120B.DWG

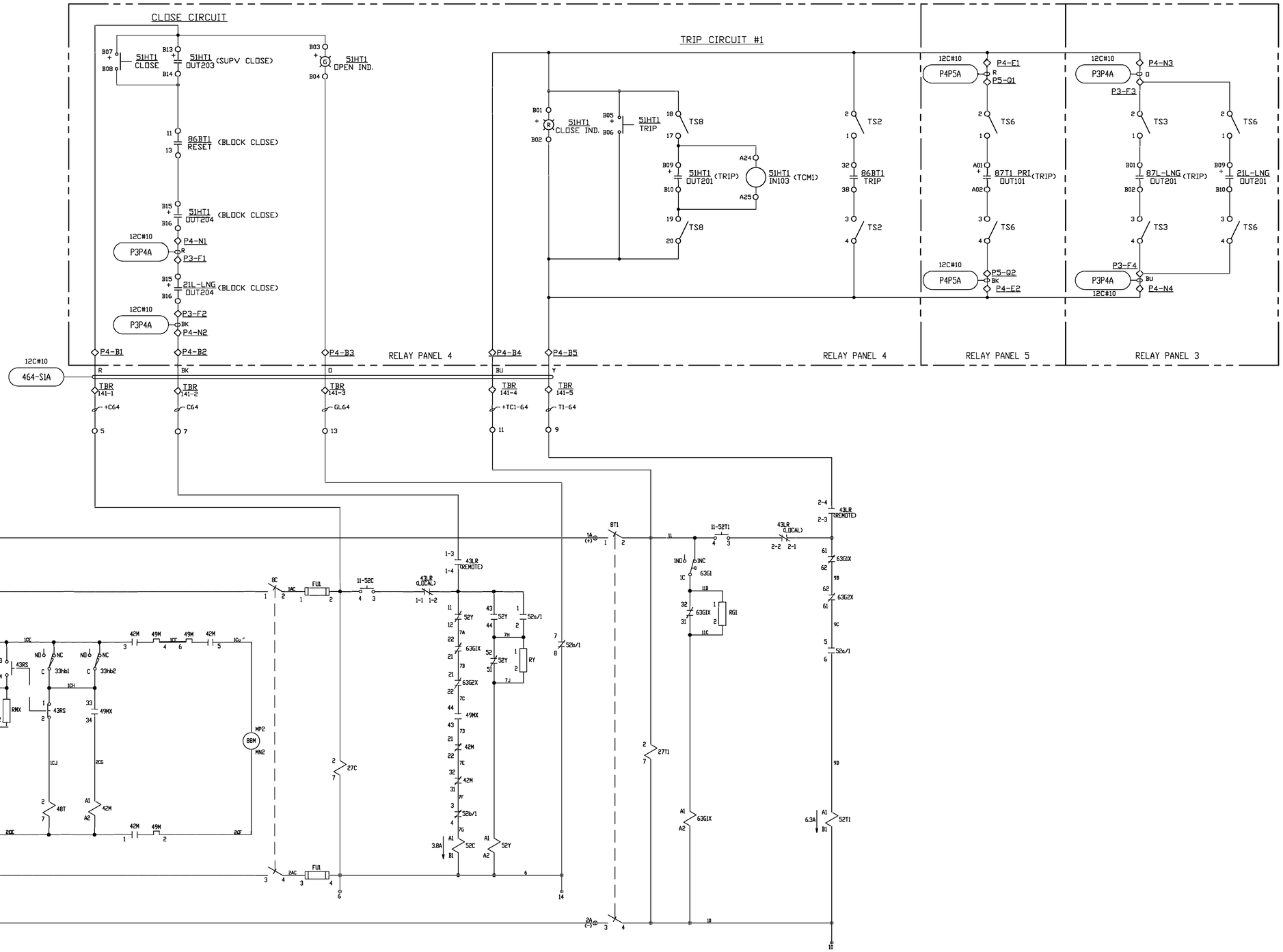

NOTES:
1. ALL WIRING TO BE #12, UNLESS NOTED.
2. MULTI CONDUCTOR CABLE TO BE XHHW-2 WITH CPE JACKET.

LEGEND:
◇ INDICATES TERMINAL POINT

DATE	DRAWN BY	NO.	APPROVED BY	REVISION DESCRIPTION
06-20	KLV	1	PDK	CONFORMING TO CONSTRUCTION RECORDS
10-19	SMW	0	PDK	FOR CONSTRUCTION

DGR ENGINEERING
ROCK RAPIDS, IOWA
(712) 472-2531

BLACK HILLS ENERGY

WEST RAPID CITY SUBSTATION
CONTROL SCHEMATIC
CB 23464 TRIP #1/CLOSE/MOTOR

DRAWN BY SMW DATE 1-19
APPROVED BY PDK DATE 1-19
DWG NO. WRC-E-122A REVISION 1

P:\04233\00\DWG\RECORD\WRC\CAD\WRC-E-122A.DWG

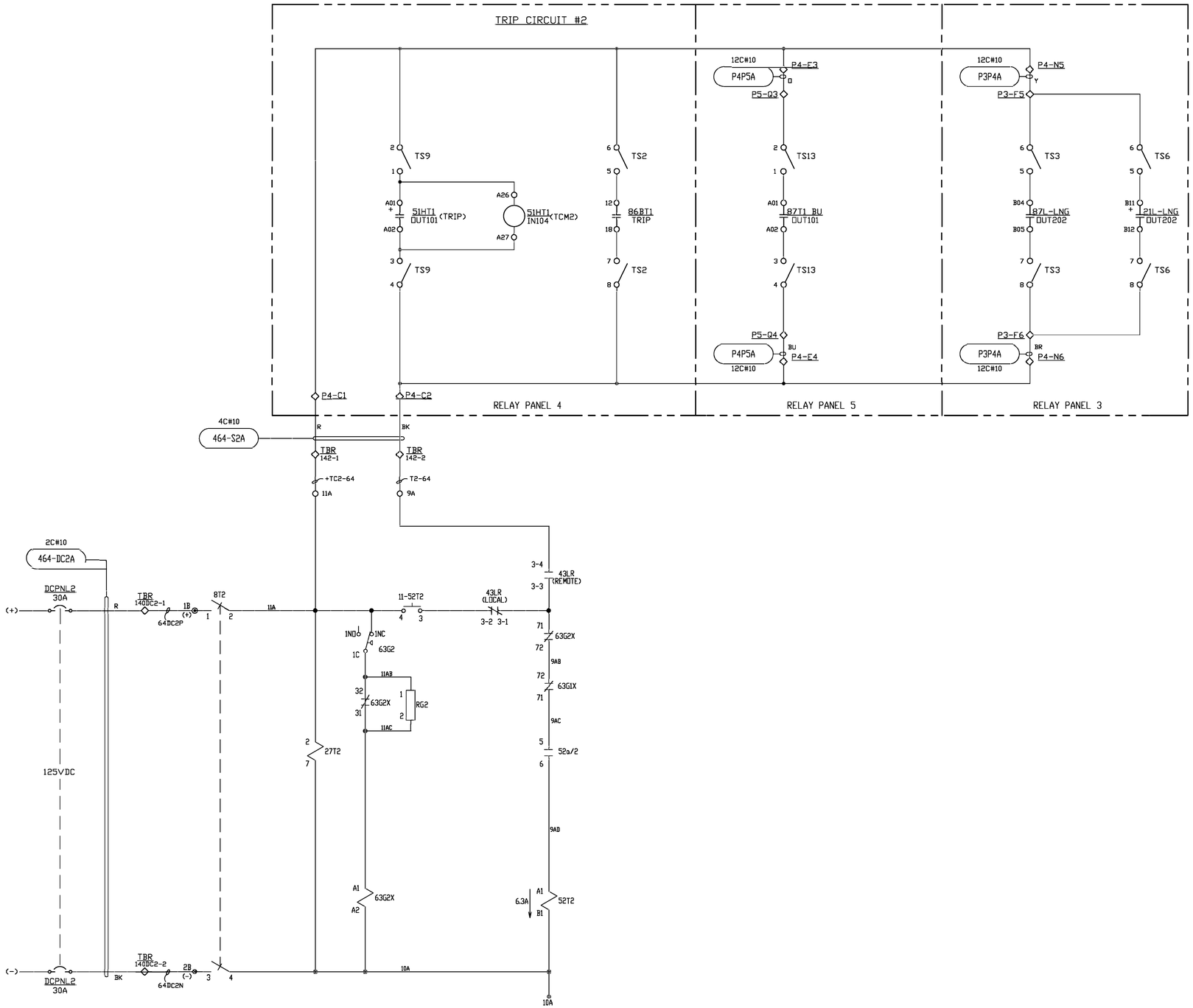

NOTES:
1. ALL WIRING TO BE #12, UNLESS NOTED.
2. MULTI CONDUCTOR CABLE TO BE XHHW-2 WITH CPE JACKET.

LEGEND:
◇ INDICATES TERMINAL POINT

P:\04023\00\DWG\RECORD\WRC\CAD\WRC-E-122B.DWG

DGR ENGINEERING
ROCK RAPIDS, IOWA
(712) 472-2531

DATE	DRAWN BY	NO.	APPROVED BY	REVISION DESCRIPTION
06-20	KLV	1	PDK	CONFORMING TO CONSTRUCTION RECORDS
10-19	SMW	0	PDK	FOR CONSTRUCTION

BLACK HILLS ENERGY

WEST RAPID CITY SUBSTATION
CONTROL SCHEMATIC
CB 23464 TRIP #2

DRAWN BY SMW DATE 1-19
APPROVED BY PDK DATE 1-19
DWG NO. WRC-E-122B REVISION 1

OPERATING CHARACTERISTICS			
DEVICE	NOMINAL VOLTAGE	CURRENT	OPERATING VOLTAGE RANGE
52C	125 VDC	3.8 A	90-140 VDC
52T1,2	125 VDC	6.3 A	70-140 VDC
88M	125 VDC	START 48.0 A RUN 13.0 A	90-140 VDC

AUXILIARY SWITCH CONTACTS 10a,10b
(FOR CUSTOMER USE)

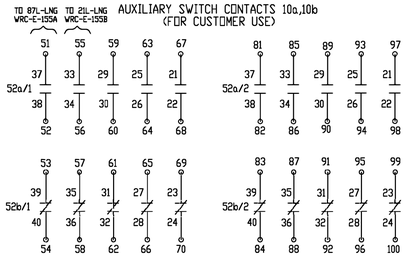





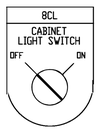

ALARM CONTAACTS

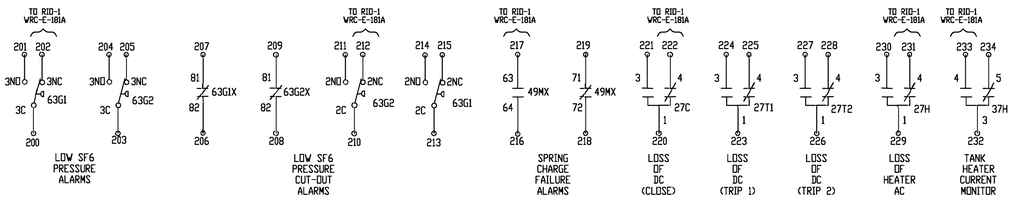

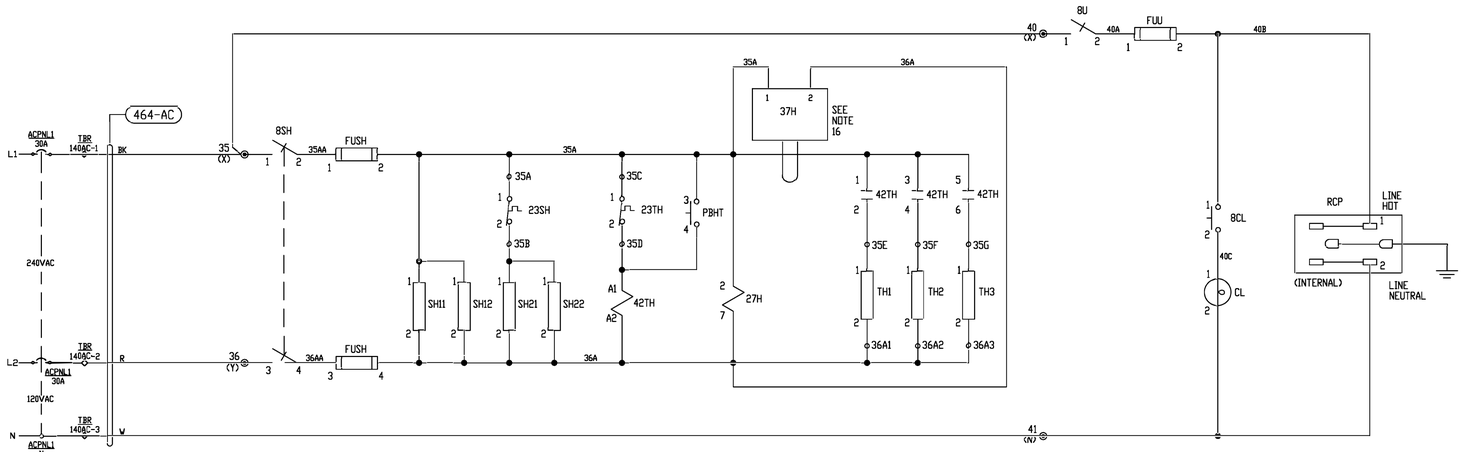

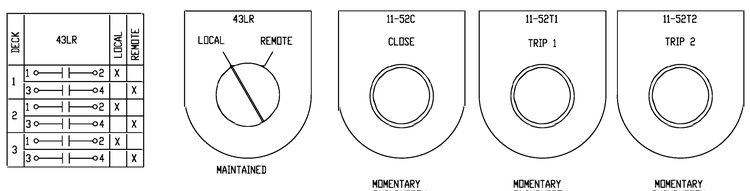

DEVICE	DESCRIPTION	MEPPI #	MANUFACTURE MANF #	
8C,8M1,8SH,8T1,8T2	2 POLE, KNIFE SWITCH, 30A, 600V FRONT CONNECTED		STATES COMPANY 402-W TYPE SMH	
8CL	LIGHT SWITCH	13177	SQUARE D 9001-KS12BH36Y238	
8U	SINGLE POLE, KNIFE SWITCH, 30A, 600V FRONT CONNECT		STATES COMPANY 401-A	
11-52C,11-52T1,11-52T2,PBHT	CLOSE/TRIP PUSHBUTTON SWITCH	12984	SQUARE D 9001-KR1BH5Y238	
23SH	THERMOSTAT, CABINET HEATERS	12082	ELMWOOD SENSORS 245SRDV81S10033 W/B206 BRACKET OR GE WR50X50	
23TH	THERMOSTAT, TANK HTR -15oC (5oF) 1500VAC HIPOT	13242	ELMWOOD 3100U-020B-0006	
27C,27T1,27T2	125VDC DPDT RELAY	12225	SQUARE D 8501KPDR12V63	
27H	240VAC AUX RELAY	12619	SQUARE D 8501KPR12V24	
33hb1,33hb2	MECHANISM LIMIT SWITCH CHARGED OPEN	10253	OMRON X-10GM2-B	
37H	CURRENT MONITOR, 230VAC	14082	ABB ECSV6MBHT	
42M	125VDC MOTOR CONTACTOR, 32A	14517	MITSUBISHI SD-T21BCDC1252A2B	
42M	CONNECTOR FOR THERM-OVRLD TO CONTACTOR	14537	MITSUBISHI UN-TH21	
42TH	200-240VAC CONTACTOR 13A	14337	MITSUBISHI S-T12BCAC200V1A1B	
43RS	PUSHBUTTON SWITCH		SQUARE D 9001-KR1BH1Y238	
43LR	LOCAL/REMOTE SELECTOR SWITCH		SQUARE D 9001-KS11BH3Y238	
48T	TIME DELAY RELAY 110VDC/120VAC, 0.6-60 SEC	14542	SQUARE D 9050JCK13V20	
49M	THERMAL OVERLOAD (7-11A)	14528	MITSUBISHI TH-T25BCKP9A	
49MX,52Y	CONTACTOR RELAY 48VDC	14409	MITSUBISHI SRD-T5BCDC48V3A2B	
49MX	ADDER DECK (2 NO 2 NC)	14524	MITSUBISHI UT-AX4BC2A2B	
52a/1,52a/2 52b/1,52b/2	AUXILIARY SWITCH 20a 20b	D100290H02	MITSUBISHI ELECTRIC D100290H02	
52C	COIL, CLOSE, 125 VDC, 33 OHM	10020	MEPPI 10020	
52T1,52T2	COIL, TRIP, 125VDC, 20 OHM	10378	MEPPI 10378	
63G1,63G2	SF6 Gas Pressure Switch 71PSIG New Style w/ Tank Heaters	D101010H01	Solon Manufacturing 27C/301	
63G1X,63G2X	36VDC RELAY	12707	TELEMECANIQUE CAD326CD	
63G1X,63G2X	ADD-ON AUXILIARY CONTACT BLOCK 4NC	12812	TELEMECANIQUE LADN04	
88M	120VAC/125VDC, SPRING CHARGE MOTOR	C100306H02	MEPPI C100306H02	
CL	50/60V 120/130VAC ROUGH SERVICE CABINET LIGHT	11462	GE OR EQUIVALENT	
FU1,FUM1	15A, 250V, 2 POLE FUSE, FUSETRON		BUSSMANN FRN-R-15 W/HLDR RM25030-2SR	
FUSH	20A, 250V, 2 POLE FUSE, FUSETRON		BUSSMANN FRN-R-20 W/HLDR RM25030-2SR	
FUU	15A, 250V, 1 POLE FUSE, FUSETRON		BUSSMAN FRN-R-15 W/HLDR RM25030-1SR	
RCP	RECEPTACLE,15A 125VAC (INTERNAL)		HUBBELL HBL5262	
RG1,RG2,RMX,RY	RESISTOR 25W 1k OHM	11332	OHMITE L25J1K0E	
SH11,SH12,SH21,SH22	CABINET HEATER 240VAC, 150W	D101924H02	MEPPI D101924H02	
TH1,TH2,TH3	TANK HEATER, 240VAC, 1200W	D103353H09	MEPPI D103353H09	

NOTES
1. CLOSING SPRING IS DISCHARGED.
2. AUXILIARY SWITCHES ARE SHOWN WITH BREAKER IN OPEN POSITION.
3. RELAY CONTACTS ARE SHOWN DE-ENERGIZED.
4. PRESSURE SWITCHES ARE SHOWN WITH LOW SF6 PRESSURE.
5. KNIFE SWITCHES ARE SHOWN OPEN.
6. MAKE CONTACT
   BREAK CONTACT
   (TDC)
   TIME DELAY MAKE CONTACT
   BREAK CONTACT OF PRESSURE SWITCH
   CLOSED CONTACT OF THERMOSTAT
   CLOSED CONTACT OF LIMIT SWITCH
   OPEN CONTACT OF LIMIT SWITCH
   MAKE CONTACT WITH HAND RESET
   BREAK CONTACT WITH HAND RESET
   OPEN CONTACT WITH SPRING RETURN
   CUSTOMER SUPPLIED INDICATING LIGHT
   CUSTOMER SUPPLIED CONTACT
   PUSH BUTTON MAKE CONTACT
   PUSH BUTTON BREAK CONTACT
7. WIRE SPECIFICATION
   CABINET HEATER LEAD WIRES - 600V SFF-2 12AWG (WHITE)
   CABINET HEATER COVER GROUND - 600V SFF-2 10AWG (GREEN)
   GROUNDING CIRCUITS - 600V 12AWG SIS (GREEN)
   HEATER CIRCUIT - 600V 12AWG SIS (GRAY)
   TANK HEATER LEAD WIRES - 600V TEFLON 14AWG (WHITE OR BLACK)
   ALL OTHER CIRCUITS - 600V 14AWG SIS (GRAY)
8. TERMINAL BLOCKS
   8.1 CONTROL CIRCUIT
   TYPE AND RATING: GENERAL ELECTRIC, EB-25, 600V, 30A
   TERMINAL SCREW: #10-32
   CAPABLE OF CONNECTION UP TO 10AWG
   8.2 SUPPLY
   TYPE AND RATING: GENERAL ELECTRIC,EB-1, 600V, 100A
   TERMINAL SCREW: 1/4-20
   CAPABLE OF CONNECTION UP TO 4AWG
9. WIRE TERMINATIONS: NON-INSULATED, RING TONGUE, COMPRESSION TYPE, WITH BRAZED SEAM, AND SERRATED BARREL.
10. TO RESET 49M PRESS BUTTON ON 49M.
11. TO RESET 49MX OPEN 43RS.
12. WIRE NUMBER IS THE SAME AS THE TERMINAL POINT NUMBER UNLESS OTHERWISE IDENTIFIED.
13. ALL PANEL GROUNDING IS ACCOMPLISHED USING A GROUNDING WIRE ATTACHED TO THE CABINET GROUND BUS.
14. IN ADDITION TO DEVICE NUMBERS, LABELING FOR KNIFE SWITCHES AND FUSES WILL INCLUDE DESCRIPTIONS PER TABLE BELOW. ALL ENGRAVED LABELS ATTACHED WITH SCREWS.

DEVICE	DESCRIPTION
8C	8C 125VDC CLOSE
8T1	8T1 125VDC TRIP 1
8T2	8T2 125VDC TRIP 2
8M1	8M1 125VDC SPRING MOTOR
8SH	8SH 240VAC HEATERS
8U	8U 120VAC RECEPTACLE
FU1	FU1 125VDC CLOSE
FUT1	FUT1 125VDC TRIP 1
FUT2	FUT2 125VDC TRIP 2
FUM1	FUM1 125VDC SPRING MOTOR
FUSH	FUSH 240VAC HEATERS
FUU	FUU 120VAC RECEPTACLE

15. 43RS MUST BE ACTIVATED ON INITIAL START UP TO ALLOW BREAKER TO CLOSE. 43RS MUST ALSO BE ACTIVATED TO RESET FROM A SPRING CHARGE ALARM.



16. TANK HEATER MONITOR SETTINGS FOR 37H
    T: 1 SEC
    OVERCURRENT TRIP: 18 AMPS
    UNDERCURRENT TRIP: 12 AMPS
    CONTACT 3-4 (NO) CLOSES IF CURRENT DROPS BELOW 12 AMPS.
    NOTE: WIRE 35A MUST BE LOOPED THROUGH CURRENT SENSING 1 TIME.
17. 43LR SWITCH IS SHOWN IN THE LOCAL POSITION

DEVICE	FUNCTION
27C	LOSS OF DC CLOSE RELAY
27T1	LOSS OF DC TRIP 1 RELAY
27T2	LOSS OF DC TRIP 2 RELAY
42M	MAGNETIC CONTACTOR FOR 88M
42TH	MAGNETIC CONTACTOR FOR TANK HEATERS
48T	TIME LIMIT RELAY FOR 42M (SET AT 30 SEC)
49M	THERMAL OVERLOAD RELAY (SET AT 9A)
49MX	AUXILIARY RELAY FOR 49M
52Y	ANTI-PUMPING RELAY
63G1X	AUXILIARY RELAY FOR 63G1
63G2X	AUXILIARY RELAY FOR 63G2

THIS DRAWING WAS CREATED FROM MEPPI DRAWING D406757, REV. G

P:\04233\00\DWG\RECORD\WRC\CAD\WRC-E-122C.DWG

DGR ENGINEERING
ROCK RAPIDS, IOWA
(712) 472-2531

DATE	DRAWN BY	NO.	APPROVED BY	REVISION DESCRIPTION
06-20	KLV	1	PJK	CONFORMING TO CONSTRUCTION RECORDS
10-19	SNW	0	PJK	FOR CONSTRUCTION

BLACK HILLS ENERGY
WEST RAPID CITY SUBSTATION
AUXILIARY SCHEMATIC
CB 23464

DRAWN BY SNW DATE 1-19
APPROVED BY PJK DATE 1-19
DWG NO. WRC-E-122C REVISION NO. 1

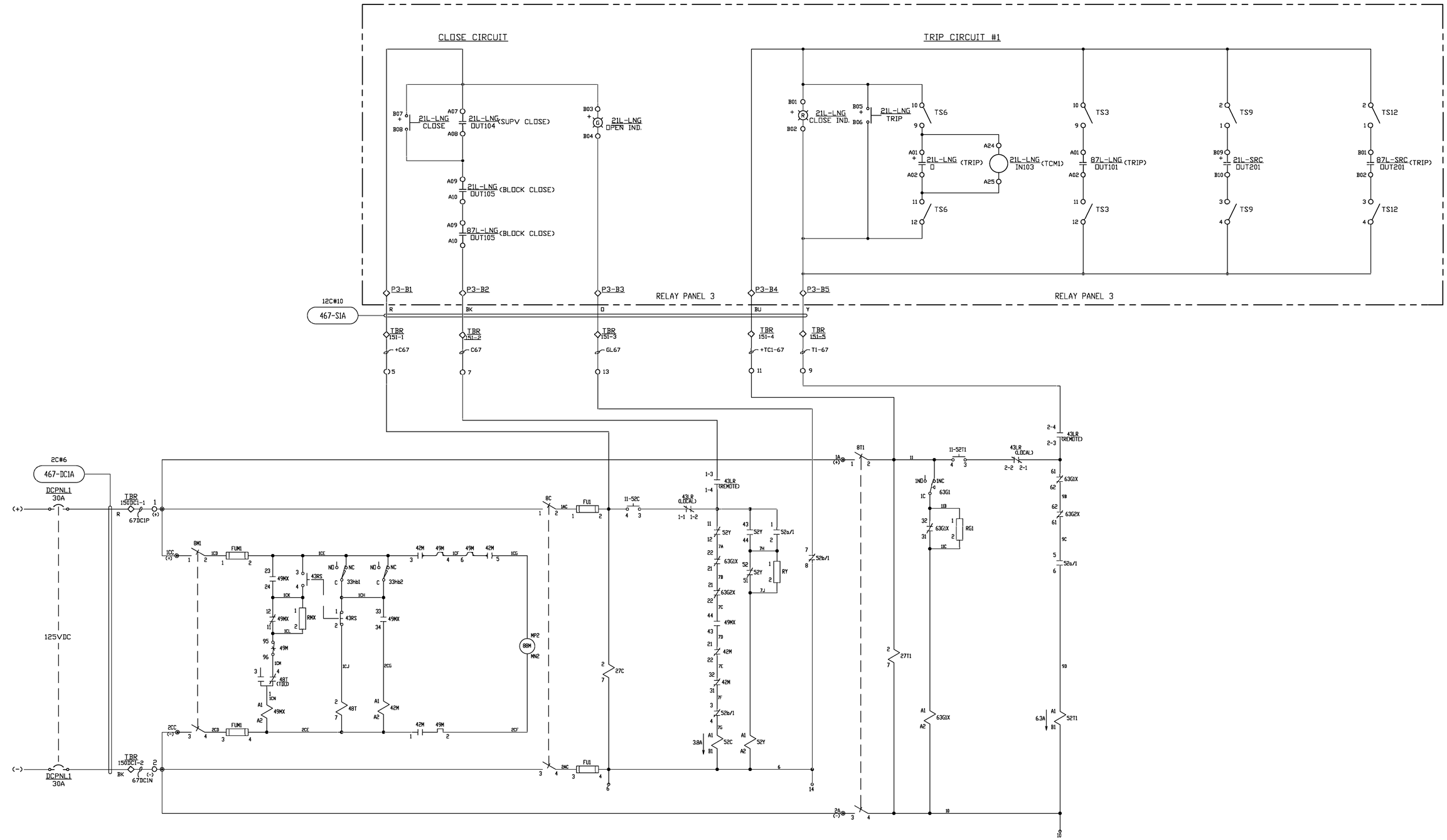

NOTES:
1. ALL WIRING TO BE #12, UNLESS NOTED.
2. MULTI CONDUCTOR CABLE TO BE XHHW-2 WITH CPE JACKET.

LEGEND:
◇ INDICATES TERMINAL POINT

DATE	DRAWN BY	NO.	APPROVED BY	REVISION DESCRIPTION
06-20	KLV	1	PDK	CONFORMING TO CONSTRUCTION RECORDS
10-19	SMW	0	PDK	FOR CONSTRUCTION

DGR ENGINEERING
ROCK RAPIDS, IOWA
(712) 472-2531

BLACK HILLS ENERGY

WEST RAPID CITY SUBSTATION
CONTROL SCHEMATIC
CB 23467 TRIP #1/CLOSE/MOTOR

DRAWN BY SMW DATE 1-19
APPROVED BY PDK DATE 1-19

DWG NO. WRC-E-123A REVISION NO. 1

P:\040239\00\DWGRECORD\WRCCAD\WRC-E-123A.DWG

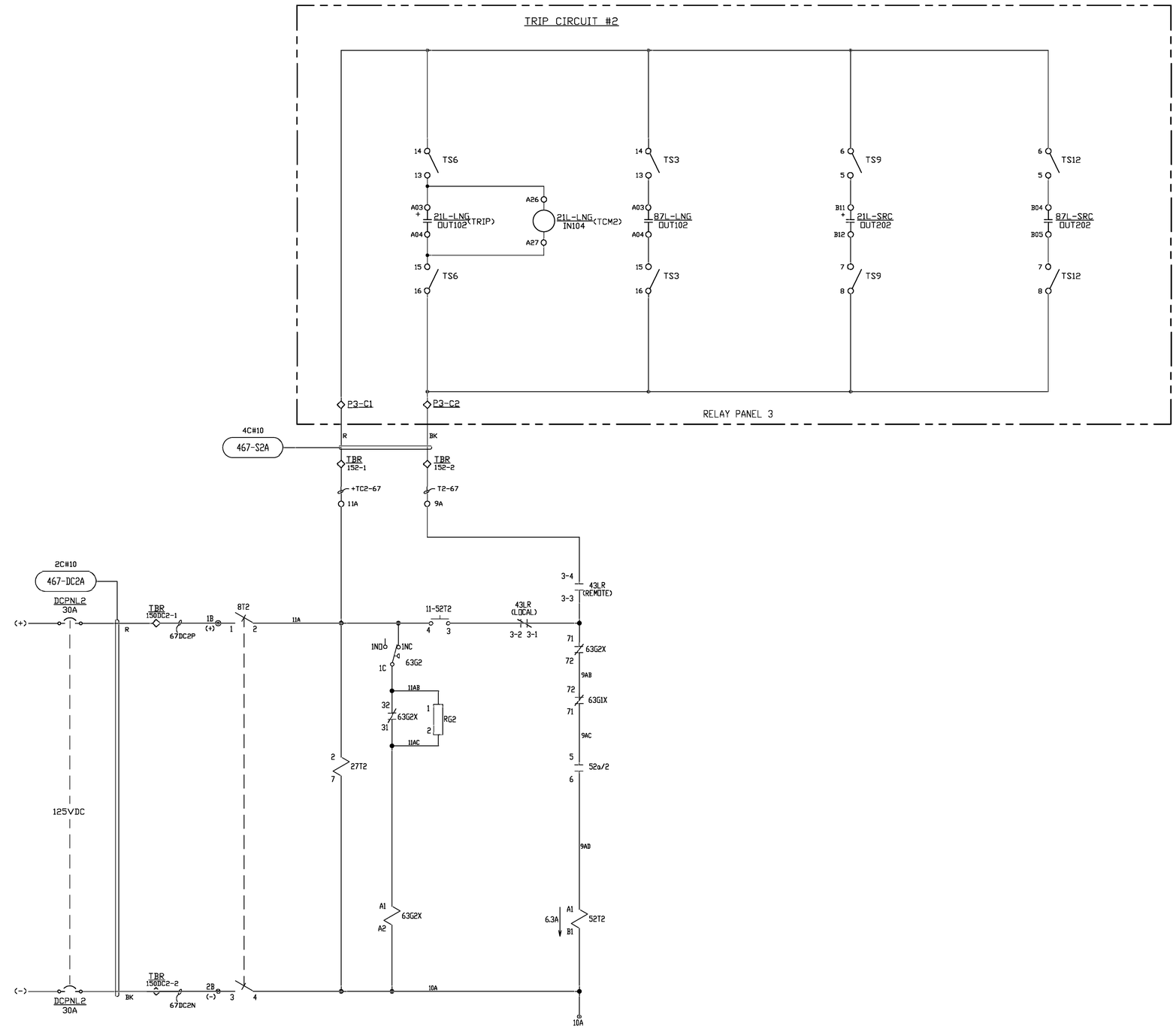

NOTES:
1. ALL WIRING TO BE #12, UNLESS NOTED.
2. MULTI CONDUCTOR CABLE TO BE XHHW-2 WITH CPE JACKET.

LEGEND:
◇ INDICATES TERMINAL POINT

P:\04233\00\DWG\RECORD\WRC\CAD\WRC-E-123B.DWG

DGR ENGINEERING
ROCK RAPIDS, IOWA
(712) 472-2531

DATE	DRAWN BY	NO.	APPROVED BY	REVISION DESCRIPTION
06-20	KLV	1	PJK	CONFORMING TO CONSTRUCTION RECORDS
10-19	SMW	0	PJK	FOR CONSTRUCTION

BLACK HILLS ENERGY
WEST RAPID CITY SUBSTATION
CONTROL SCHEMATIC
CB 23467 TRIP #2

DRAWN BY SMW DATE 1-19
APPROVED BY PJK DATE 1-19
DWG NO. WRC-E-123B REVISION 1

OPERATING CHARACTERISTICS			
DEVICE	NOMINAL VOLTAGE	CURRENT	OPERATING VOLTAGE RANGE
52C	125 VDC	3.8 A	90-140 VDC
52T1,2	125 VDC	6.3 A	70-140 VDC
88M	125 VDC	START 48.0 A RUN 13.0 A	90-140 VDC

AUXILIARY SWITCH CONTACTS 10a,10b
(FOR CUSTOMER USE)

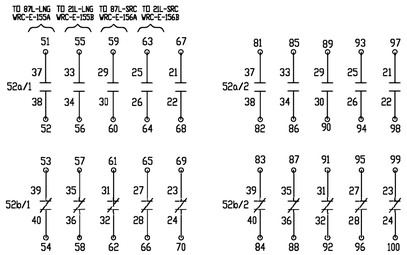





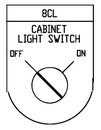

ALARM CONTAACTS

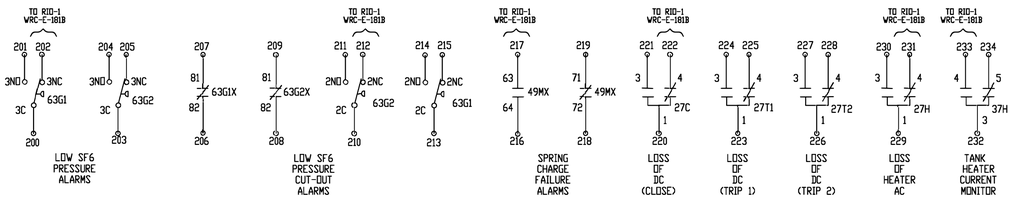

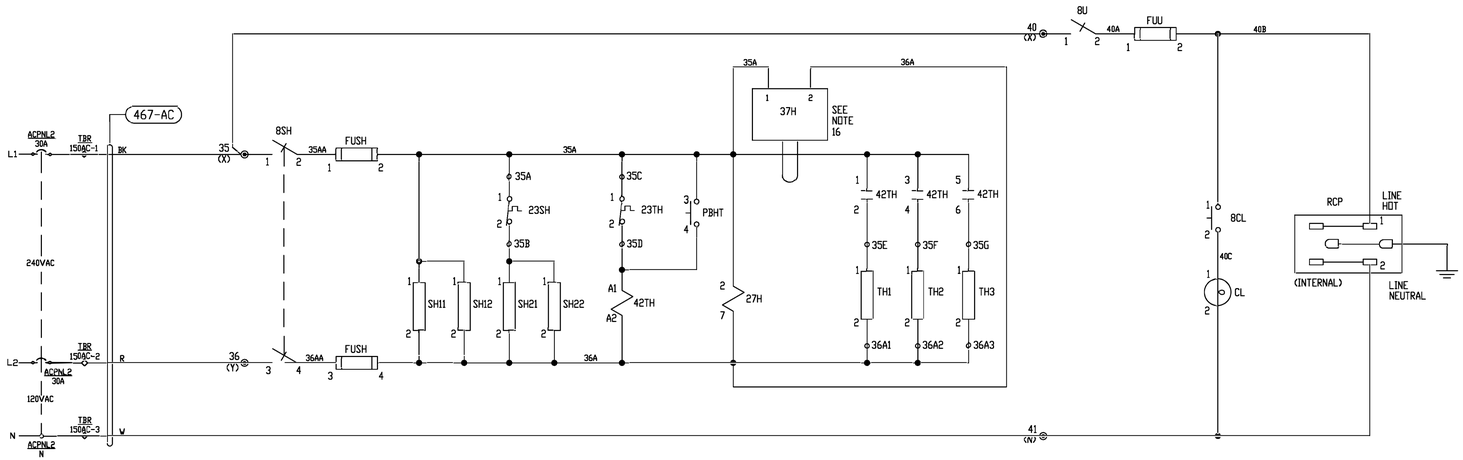

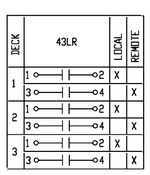

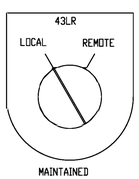

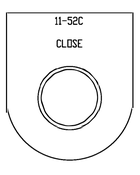

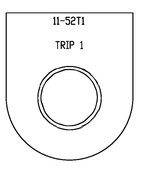

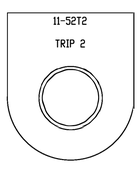

DEVICE	DESCRIPTION	MEPPI #	MANUFACTURE MANF #	
8C,8M1,8SH,8T1,8T2	2 POLE, KNIFE SWITCH, 30A, 600V FRONT CONNECTED		STATES COMPANY 402-W TYPE SMH	
8CL	LIGHT SWITCH	13177	SQUARE D 9001-KS12BH36Y238	
8U	SINGLE POLE, KNIFE SWITCH, 30A, 600V FRONT CONNECT		STATES COMPANY 401-A	
11-52C,11-52T1,11-52T2,PBHT	CLOSE/TRIP PUSHBUTTON SWITCH	12984	SQUARE D 9001-KR1BH5Y238	
23SH	THERMOSTAT, CABINET HEATERS	12082	ELMWOOD SENSORS 245SRDV81S10093 W/B206 BRACKET OR GE WR50X50	
23TH	THERMOSTAT, TANK HTR -15oC (5oF) 1500VAC HIPOT	13242	ELMWOOD 3100U-020B-0006	
27C,27T1,27T2	125VDC DPDT RELAY	12225	SQUARE D 8501KPDR12V63	
27H	240VAC AUX RELAY	12619	SQUARE D 8501KPR12V24	
33hb1,33hb2	MECHANISM LIMIT SWITCH CHARGED OPEN	10253	OMRON X-10GM2-B	
37H	CURRENT MONITOR, 230VAC	14082	ABB ECSV6MBHT	
42M	125VDC MOTOR CONTACTOR, 32A	14517	MITSUBISHI SD-T21BCDC1252A2B	
42M	CONNECTOR FOR THERM-OVRLD TO CONTACTOR	14537	MITSUBISHI UN-TH21	
42TH	200-240VAC CONTACTOR 13A	14337	MITSUBISHI S-T12BCAC200V1A1B	
43RS	PUSHBUTTON SWITCH		SQUARE D 9001-KR1BH1Y238	
43LR	LOCAL/REMOTE SELECTOR SWITCH		SQUARE D 9001-KS11BH3Y238	
48T	TIME DELAY RELAY 110VDC/120VAC, 0.6-60 SEC	14542	SQUARE D 9050JCK13V20	
49M	THERMAL OVERLOAD (7-11A)	14528	MITSUBISHI TH-T25BCKP9A	
49MX,52Y	CONTACTOR RELAY 48VDC	14409	MITSUBISHI SRD-T5BCDC48V3A2B	
49MX	ADDER DECK (2 NO 2 NC)	14524	MITSUBISHI UT-AX4BC2A2B	
52a/1,52a/2 52b/1,52b/2	AUXILIARY SWITCH 20a 20b	D100290H02	MITSUBISHI ELECTRIC D100290H02	
52C	COIL, CLOSE, 125 VDC, 33 OHM	10020	MEPPI 10020	
52T1,52T2	COIL, TRIP, 125VDC, 20 OHM	10378	MEPPI 10378	
63G1,63G2	SF6 Gas Pressure Switch 71PSIG New Style w/ Tank Heaters	D101010H01	Solon Manufacturing 27C/301	
63G1X,63G2X	36VDC RELAY	12707	TELEMECANIQUE CAD326CD	
63G1X,63G2X	ADD-ON AUXILIARY CONTACT BLOCK 4NC	12812	TELEMECANIQUE LADN04	
88M	120VAC/125VDC, SPRING CHARGE MOTOR	C100306H02	MEPPI C100306H02	
CL	50/60V 120/130VAC ROUGH SERVICE CABINET LIGHT	11462	GE OR EQUIVALENT	
FU1,FUM1	15A, 250V, 2 POLE FUSE, FUSETRON		BUSSMANN FRN-R-15 W/HLDR RM25030-2SR	
FUSH	20A, 250V, 2 POLE FUSE, FUSETRON		BUSSMANN FRN-R-20 W/HLDR RM25030-2SR	
FUU	15A, 250V, 1 POLE FUSE, FUSETRON		BUSSMAN FRN-R-15 W/HLDR RM25030-1SR	
RCP	RECEPTACLE,15A 125VAC (INTERNAL)		HUBBELL HBL5262	
RG1,RG2,RMX,RY	RESISTOR 25W 1k OHM	11332	OHMITE L25J1K0E	
SH11,SH12,SH21,SH22	CABINET HEATER 240VAC, 150W	D101924H02	MEPPI D101924H02	
TH1,TH2,TH3	TANK HEATER, 240VAC, 1200W	D103353H09	MEPPI D103353H09	

NOTES
1. CLOSING SPRING IS DISCHARGED.
2. AUXILIARY SWITCHES ARE SHOWN WITH BREAKER IN OPEN POSITION.
3. RELAY CONTACTS ARE SHOWN DE-ENERGIZED.
4. PRESSURE SWITCHES ARE SHOWN WITH LOW SF6 PRESSURE.
5. KNIFE SWITCHES ARE SHOWN OPEN.
6. MAKE CONTACT
   BREAK CONTACT
   (TDC) TIME DELAY MAKE CONTACT
   BREAK CONTACT OF PRESSURE SWITCH
   CLOSED CONTACT OF THERMOSTAT
   CLOSED CONTACT OF LIMIT SWITCH
   OPEN CONTACT OF LIMIT SWITCH
   MAKE CONTACT WITH HAND RESET
   BREAK CONTACT WITH HAND RESET
   OPEN CONTACT WITH SPRING RETURN
   CUSTOMER SUPPLIED INDICATING LIGHT
   CUSTOMER SUPPLIED CONTACT
   PUSH BUTTON MAKE CONTACT
   PUSH BUTTON BREAK CONTACT
7. WIRE SPECIFICATION
   CABINET HEATER LEAD WIRES - 600V SFF-2 12AWG (WHITE)
   CABINET HEATER COVER GROUND - 600V SFF-2 10AWG (GREEN)
   GROUNDING CIRCUITS - 600V 12AWG SIS (GREEN)
   HEATER CIRCUIT - 600V 12AWG SIS (GRAY)
   TANK HEATER LEAD WIRES - 600V TEFLON 14AWG (WHITE OR BLACK)
   ALL OTHER CIRCUITS - 600V 14AWG SIS (GRAY)
8. TERMINAL BLOCKS
   8.1 CONTROL CIRCUIT
   TYPE AND RATING: GENERAL ELECTRIC, EB-25, 600V, 30A
   TERMINAL SCREW: #10-32
   CAPABLE OF CONNECTION UP TO 10AWG
   8.2 SUPPLY
   TYPE AND RATING: GENERAL ELECTRIC,EB-1, 600V, 100A
   TERMINAL SCREW: 1/4-20
   CAPABLE OF CONNECTION UP TO 4AWG
9. WIRE TERMINATIONS: NON-INSULATED, RING TONGUE, COMPRESSION TYPE, WITH BRAZED SEAM, AND SERRATED BARREL.
10. TO RESET 49M PRESS BUTTON ON 49M.
11. TO RESET 49MX OPEN 43RS.
12. WIRE NUMBER IS THE SAME AS THE TERMINAL POINT NUMBER UNLESS OTHERWISE IDENTIFIED.
13. ALL PANEL GROUNDING IS ACCOMPLISHED USING A GROUNDING WIRE ATTACHED TO THE CABINET GROUND BUS.
14. IN ADDITION TO DEVICE NUMBERS, LABELING FOR KNIFE SWITCHES AND FUSES WILL INCLUDE DESCRIPTIONS PER TABLE BELOW. ALL ENGRAVED LABELS ATTACHED WITH SCREWS.

DEVICE	DESCRIPTION
8C	8C 125VDC CLOSE
8T1	8T1 125VDC TRIP 1
8T2	8T2 125VDC TRIP 2
8M1	8M1 125VDC SPRING MOTOR
8SH	8SH 240VAC HEATERS
8U	8U 120VAC RECEPTACLE
FU1	FU1 125VDC CLOSE
FUT1	FUT1 125VDC TRIP 1
FUT2	FUT2 125VDC TRIP 2
FUM1	FUM1 125VDC SPRING MOTOR
FUSH	FUSH 240VAC HEATERS
FUU	FUU 120VAC RECEPTACLE

15. 43RS MUST BE ACTIVATED ON INITIAL START UP TO ALLOW BREAKER TO CLOSE. 43RS MUST ALSO BE ACTIVATED TO RESET FROM A SPRING CHARGE ALARM.

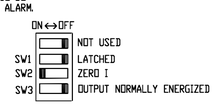

16. TANK HEATER MONITOR SETTINGS FOR 37H
    T: 1 SEC
    OVERCURRENT TRIP: 18 AMPS
    UNDERCURRENT TRIP: 12 AMPS
    CONTACT 3-4 (NO) CLOSES IF CURRENT DROPS BELOW 12 AMPS.
    NOTE: WIRE 35A MUST BE LOOPED THROUGH CURRENT SENSING 1 TIME.
17. 43LR SWITCH IS SHOWN IN THE LOCAL POSITION

DEVICE	FUNCTION
27C	LOSS OF DC CLOSE RELAY
27T1	LOSS OF DC TRIP 1 RELAY
27T2	LOSS OF DC TRIP 2 RELAY
42M	MAGNETIC CONTACTOR FOR 88M
42TH	MAGNETIC CONTACTOR FOR TANK HEATERS
48T	TIME LIMIT RELAY FOR 42M (SET AT 30 SEC)
49M	THERMAL OVERLOAD RELAY (SET AT 9A)
49MX	AUXILIARY RELAY FOR 49M
52Y	ANTI-PUMPING RELAY
63G1X	AUXILIARY RELAY FOR 63G1
63G2X	AUXILIARY RELAY FOR 63G2

THIS DRAWING WAS CREATED FROM MEPPI DRAWING D406757, REV. G

P:\04233\00\DWG\RECORD\WRC\CAD\WRC-E-123C.DWG

DGR ENGINEERING
ROCK RAPIDS, IOWA
(712) 472-2531

DATE	DRAWN BY	NO.	APPROVED BY	REVISION DESCRIPTION
06-20	KLV	1	PJK	CONFORMING TO CONSTRUCTION RECORDS
10-19	SMW	0	PJK	FOR CONSTRUCTION

BLACK HILLS ENERGY
WEST RAPID CITY SUBSTATION
AUXILIARY SCHEMATIC
CB 23467

DRAWN BY SMW DATE 1-19
APPROVED BY PJK DATE 1-19
DWG NO. WRC-E-123C REVISION NO. 1

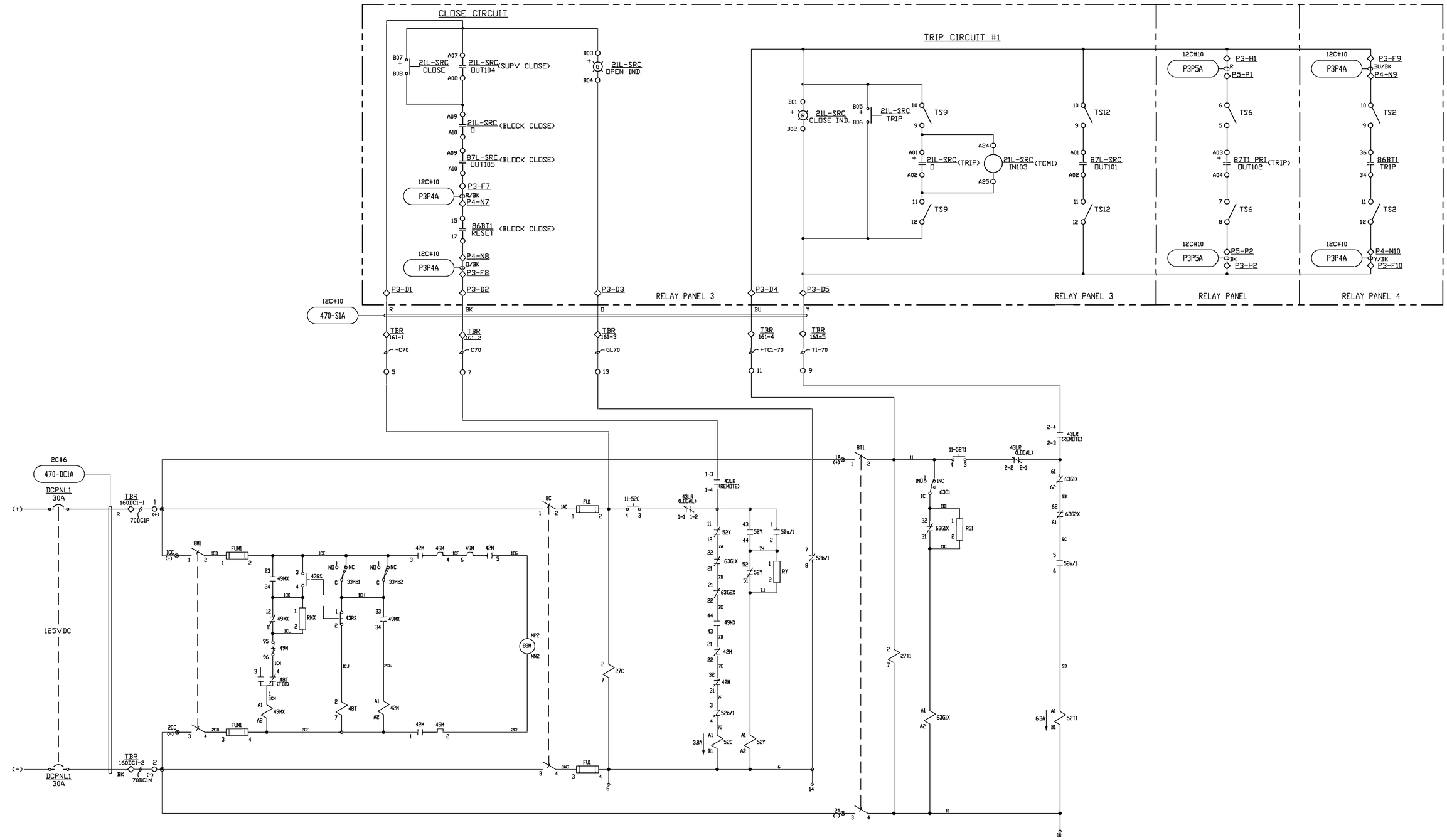

NOTES:
1. ALL WIRING TO BE #12, UNLESS NOTED.
2. MULTI CONDUCTOR CABLE TO BE XHHW-2 WITH CPE JACKET.

LEGEND:
◇ INDICATES TERMINAL POINT

P:\040239\00\DWGRECORD\WRCCAD\WRC-E-124A.DWG

DGR ENGINEERING
ROCK RAPIDS, IOWA
(712) 472-2531

DATE	DRAWN BY	NO.	APPROVED BY	REVISION DESCRIPTION
06-20	KLV	1	PJK	CONFORMING TO CONSTRUCTION RECORDS
10-19	SMW	0	PJK	FOR CONSTRUCTION

BLACK HILLS ENERGY
WEST RAPID CITY SUBSTATION
CONTROL SCHEMATIC
CB 23470 TRIP #1/CLOSE/MOTOR

DRAWN BY SMW DATE 1-19
APPROVED BY PJK DATE 1-19
DWG NO. WRC-E-124A REVISION 1

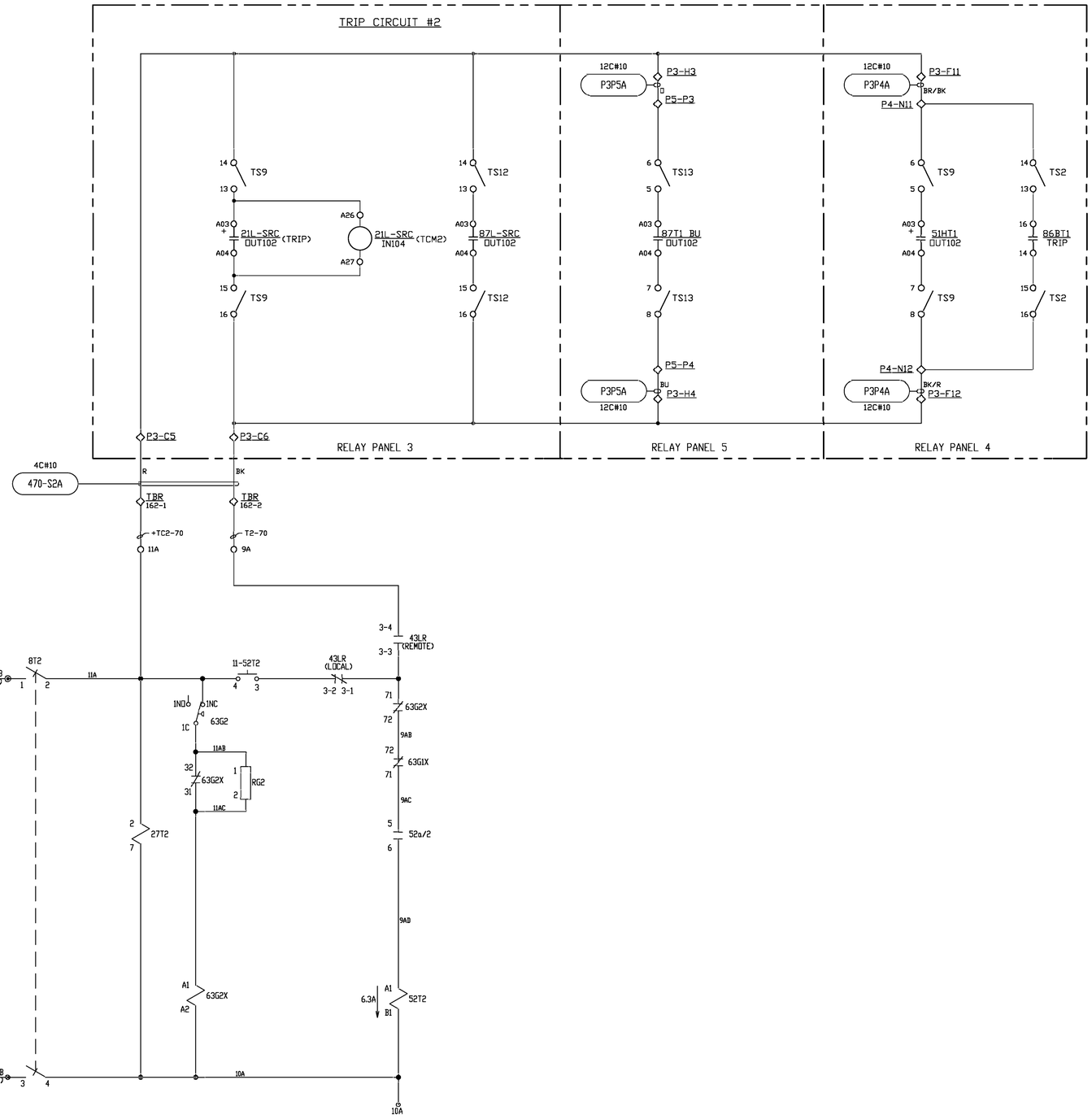

NOTES:
1. ALL WIRING TO BE #12, UNLESS NOTED.
2. MULTI CONDUCTOR CABLE TO BE XHHW-2 WITH CPE JACKET.

LEGEND:
◇ INDICATES TERMINAL POINT

P:\04233\00\DWG\RECORD\WRCCAD\WRC-E-124B.DWG

DGR ENGINEERING
ROCK RAPIDS, IOWA
(712) 472-2531

NO.	BRAWN BY	DATE	APPROVED BY	REVISION DESCRIPTION
06-20	KLV	1	PJK	CONFORMING TO CONSTRUCTION RECORDS
10-19	SMW	0	PJK	FOR CONSTRUCTION

BLACK HILLS ENERGY

WEST RAPID CITY SUBSTATION
CONTROL SCHEMATIC
CB 23470 TRIP #2

BRAWN BY SMW DATE 1-19
APPROVED BY PJK DATE 1-19

DWG NO. WRC-E-124B REVISION 1

OPERATING CHARACTERISTICS			
DEVICE	NOMINAL VOLTAGE	CURRENT	OPERATING VOLTAGE RANGE
52C	125 VDC	3.8 A	90-140 VDC
52T1,2	125 VDC	6.3 A	70-140 VDC
88M	125 VDC	START 48.0 A RUN 13.0 A	90-140 VDC

AUXILIARY SWITCH CONTACTS 10a,10b
(FOR CUSTOMER USE)

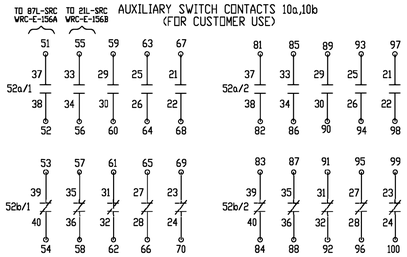





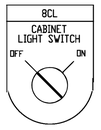

ALARM CONTAACTS

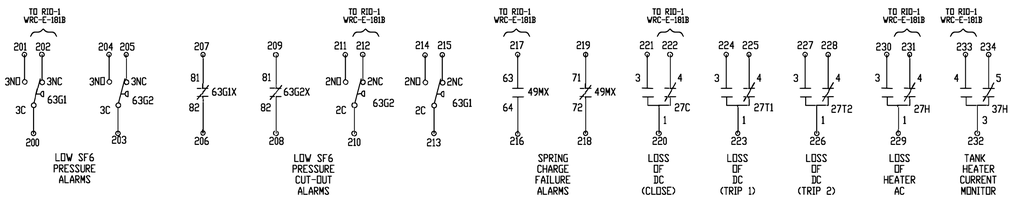

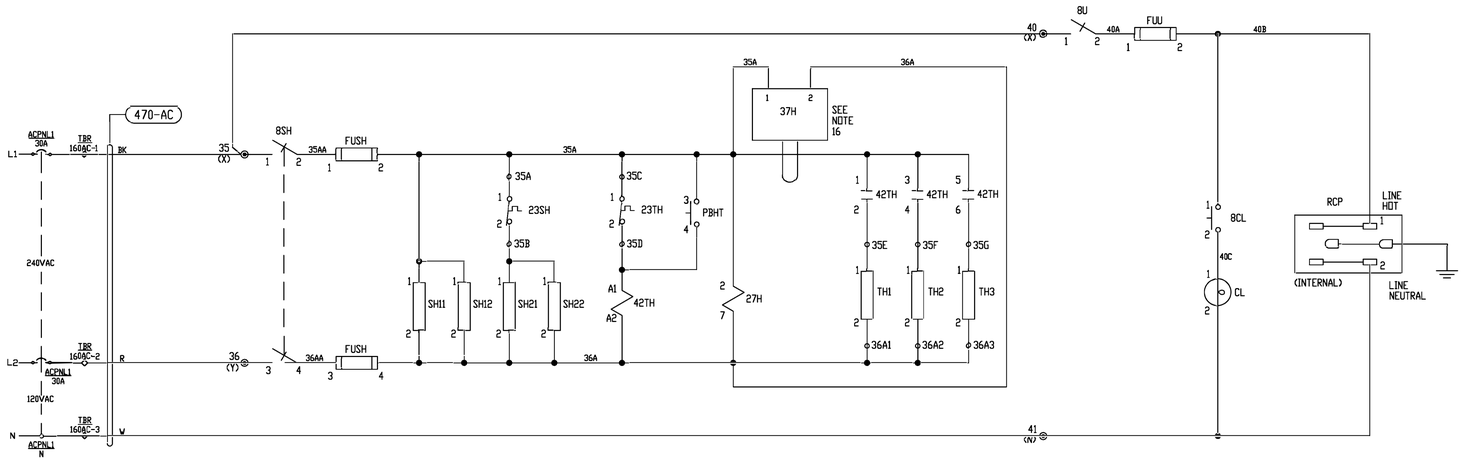

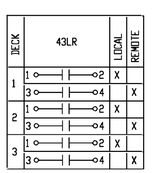

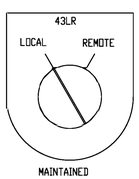

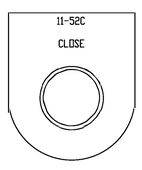

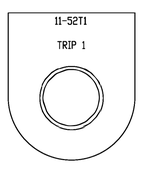

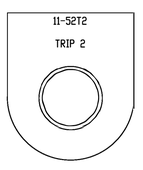

DEVICE	DESCRIPTION	MEPPI #	MANUFACTURE MANF #	
8C,8M1,8SH,8T1,8T2	2 POLE, KNIFE SWITCH, 30A, 600V FRONT CONNECTED		STATES COMPANY 402-W TYPE SMH	
8CL	LIGHT SWITCH	13177	SQUARE D 9001-KS12BH36Y238	
8U	SINGLE POLE, KNIFE SWITCH, 30A, 600V FRONT CONNECT		STATES COMPANY 401-A	
11-52C,11-52T1,11-52T2,PBHT	CLOSE/TRIP PUSHBUTTON SWITCH	12984	SQUARE D 9001-KR1BH5Y238	
23SH	THERMOSTAT, CABINET HEATERS	12082	ELMWOOD SENSORS 245SRDV81S10093 W/B206 BRACKET OR GE WR50X50	
23TH	THERMOSTAT, TANK HTR -15oC (5oF) 1500VAC HIPOT	13242	ELMWOOD 3100U-020B-0006	
27C,27T1,27T2	125VDC DPDT RELAY	12225	SQUARE D 8501KPDR12V63	
27H	240VAC AUX RELAY	12619	SQUARE D 8501KPR12V24	
33hb1,33hb2	MECHANISM LIMIT SWITCH CHARGED OPEN	10253	OMRON X-10GM2-B	
37H	CURRENT MONITOR, 230VAC	14082	ABB ECSV6MBHT	
42M	125VDC MOTOR CONTACTOR, 32A	14517	MITSUBISHI SD-T21BCDC1252A2B	
42M	CONNECTOR FOR THERM-OVRLD TO CONTACTOR	14537	MITSUBISHI UN-TH21	
42TH	200-240VAC CONTACTOR 13A	14337	MITSUBISHI S-T12BCAC200V1A1B	
43RS	PUSHBUTTON SWITCH		SQUARE D 9001-KR1BH1Y238	
43LR	LOCAL/REMOTE SELECTOR SWITCH		SQUARE D 9001-KS11BH3Y238	
48T	TIME DELAY RELAY 110VDC/120VAC, 0.6-60 SEC	14542	SQUARE D 9050JCK13V20	
49M	THERMAL OVERLOAD (7-11A)	14528	MITSUBISHI TH-T25BCKP9A	
49MX,52Y	CONTACTOR RELAY 48VDC	14409	MITSUBISHI SRD-T5BCDC48V3A2B	
49MX	ADDER DECK (2 NO 2 NC)	14524	MITSUBISHI UT-AX4BC2A2B	
52a/1,52a/2 52b/1,52b/2	AUXILIARY SWITCH 20a 20b	D100290H02	MITSUBISHI ELECTRIC D100290H02	
52C	COIL, CLOSE, 125 VDC, 33 OHM	10020	MEPPI 10020	
52T1,52T2	COIL, TRIP, 125VDC, 20 OHM	10378	MEPPI 10378	
63G1,63G2	SF6 Gas Pressure Switch 71PSIG New Style w/ Tank Heaters	D101010H01	Solon Manufacturing 27C/301	
63G1X,63G2X	36VDC RELAY	12707	TELEMECANIQUE CAD326CD	
63G1X,63G2X	ADD-ON AUXILIARY CONTACT BLOCK 4NC	12812	TELEMECANIQUE LADN04	
88M	120VAC/125VDC, SPRING CHARGE MOTOR	C100306H02	MEPPI C100306H02	
CL	50/60V 120/130VAC ROUGH SERVICE CABINET LIGHT	11462	GE OR EQUIVALENT	
FU1,FUM1	15A, 250V, 2 POLE FUSE, FUSETRON		BUSSMANN FRN-R-15 W/HLDR RM25030-2SR	
FUSH	20A, 250V, 2 POLE FUSE, FUSETRON		BUSSMANN FRN-R-20 W/HLDR RM25030-2SR	
FUU	15A, 250V, 1 POLE FUSE, FUSETRON		BUSSMAN FRN-R-15 W/HLDR RM25030-1SR	
RCP	RECEPTACLE,15A 125VAC (INTERNAL)		HUBBELL HBL5262	
RG1,RG2,RMX,RY	RESISTOR 25W 1k OHM	11332	OHMITE L25J1K0E	
SH11,SH12,SH21,SH22	CABINET HEATER 240VAC, 150W	D101924H02	MEPPI D101924H02	
TH1,TH2,TH3	TANK HEATER, 240VAC, 1200W	D103353H09	MEPPI D103353H09	

NOTES
1. CLOSING SPRING IS DISCHARGED.
2. AUXILIARY SWITCHES ARE SHOWN WITH BREAKER IN OPEN POSITION.
3. RELAY CONTACTS ARE SHOWN DE-ENERGIZED.
4. PRESSURE SWITCHES ARE SHOWN WITH LOW SF6 PRESSURE.
5. KNIFE SWITCHES ARE SHOWN OPEN.
6. MAKE CONTACT
   BREAK CONTACT
   (TDC) TIME DELAY MAKE CONTACT
   BREAK CONTACT OF PRESSURE SWITCH
   CLOSED CONTACT OF THERMOSTAT
   CLOSED CONTACT OF LIMIT SWITCH
   OPEN CONTACT OF LIMIT SWITCH
   MAKE CONTACT WITH HAND RESET
   BREAK CONTACT WITH HAND RESET
   OPEN CONTACT WITH SPRING RETURN
   CUSTOMER SUPPLIED INDICATING LIGHT
   CUSTOMER SUPPLIED CONTACT
   PUSH BUTTON MAKE CONTACT
   PUSH BUTTON BREAK CONTACT
7. WIRE SPECIFICATION
   CABINET HEATER LEAD WIRES - 600V SFF-2 12AWG (WHITE)
   CABINET HEATER COVER GROUND - 600V SFF-2 10AWG (GREEN)
   GROUNDING CIRCUITS - 600V 12AWG SIS (GREEN)
   HEATER CIRCUIT - 600V 12AWG SIS (GRAY)
   TANK HEATER LEAD WIRES - 600V TEFLON 14AWG (WHITE OR BLACK)
   ALL OTHER CIRCUITS - 600V 14AWG SIS (GRAY)
8. TERMINAL BLOCKS
   ○ 8.1 CONTROL CIRCUIT
   TYPE AND RATING: GENERAL ELECTRIC, EB-25, 600V, 30A
   TERMINAL SCREW: #10-32
   CAPABLE OF CONNECTION UP TO 10AWG
   ◉ 8.2 SUPPLY
   TYPE AND RATING: GENERAL ELECTRIC,EB-1, 600V, 100A
   TERMINAL SCREW: 1/4-20
   CAPABLE OF CONNECTION UP TO 4AWG
9. WIRE TERMINATIONS: NON-INSULATED, RING TONGUE, COMPRESSION TYPE, WITH BRAZED SEAM, AND SERRATED BARREL.
10. TO RESET 49M PRESS BUTTON ON 49M.
11. TO RESET 49MX OPEN 43RS.
12. WIRE NUMBER IS THE SAME AS THE TERMINAL POINT NUMBER UNLESS OTHERWISE IDENTIFIED.
13. ALL PANEL GROUNDING IS ACCOMPLISHED USING A GROUNDING WIRE ATTACHED TO THE CABINET GROUND BUS.
14. IN ADDITION TO DEVICE NUMBERS, LABELING FOR KNIFE SWITCHES AND FUSES WILL INCLUDE DESCRIPTIONS PER TABLE BELOW. ALL ENGRAVED LABELS ATTACHED WITH SCREWS.

DEVICE	DESCRIPTION
8C	8C 125VDC CLOSE
8T1	8T1 125VDC TRIP 1
8T2	8T2 125VDC TRIP 2
8M1	8M1 125VDC SPRING MOTOR
8SH	8SH 240VAC HEATERS
8U	8U 120VAC RECEPTACLE
FU1	FU1 125VDC CLOSE
FUT1	FUT1 125VDC TRIP 1
FUT2	FUT2 125VDC TRIP 2
FUM1	FUM1 125VDC SPRING MOTOR
FUSH	FUSH 240VAC HEATERS
FUU	FUU 120VAC RECEPTACLE

15. 43RS MUST BE ACTIVATED ON INITIAL START UP TO ALLOW BREAKER TO CLOSE. 43RS MUST ALSO BE ACTIVATED TO RESET FROM A SPRING CHARGE ALARM.
16. TANK HEATER MONITOR SETTINGS FOR 37H
    T: 1 SEC
    OVERCURRENT TRIP: 18 AMPS
    UNDERCURRENT TRIP: 12 AMPS
    CONTACT 3-4 (NO) CLOSES IF CURRENT DROPS BELOW 12 AMPS.
    NOTE: WIRE 35A MUST BE LOOPED THROUGH CURRENT SENSING 1 TIME.

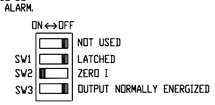

17. 43LR SWITCH IS SHOWN IN THE LOCAL POSITION

DEVICE	FUNCTION
27C	LOSS OF DC CLOSE RELAY
27T1	LOSS OF DC TRIP 1 RELAY
27T2	LOSS OF DC TRIP 2 RELAY
42M	MAGNETIC CONTACTOR FOR 88M
42TH	MAGNETIC CONTACTOR FOR TANK HEATERS
48T	TIME LIMIT RELAY FOR 42M (SET AT 30 SEC)
49M	THERMAL OVERLOAD RELAY (SET AT 9A)
49MX	AUXILIARY RELAY FOR 49M
52Y	ANTI-PUMPING RELAY
63G1X	AUXILIARY RELAY FOR 63G1
63G2X	AUXILIARY RELAY FOR 63G2

THIS DRAWING WAS CREATED FROM MEPPI DRAWING D406757, REV. G

P:\0423300\DWG\RECORD\WRC\CAD\WRC-E-124C.DWG

DGR ENGINEERING
ROCK RAPIDS, IOWA
(712) 472-2531

DATE	DRAWN BY	NO.	APPROVED BY	REVISION DESCRIPTION
06-20	KLV	1	PJK	CONFORMING TO CONSTRUCTION RECORDS
10-19	SNW	0	PJK	FOR CONSTRUCTION

BLACK HILLS ENERGY
WEST RAPID CITY SUBSTATION
AUXILIARY SCHEMATIC
CB 23470

DRAWN BY SNW DATE 1-19
APPROVED BY PJK DATE 1-19
DWG NO. WRC-E-124C REVISION NO. 1

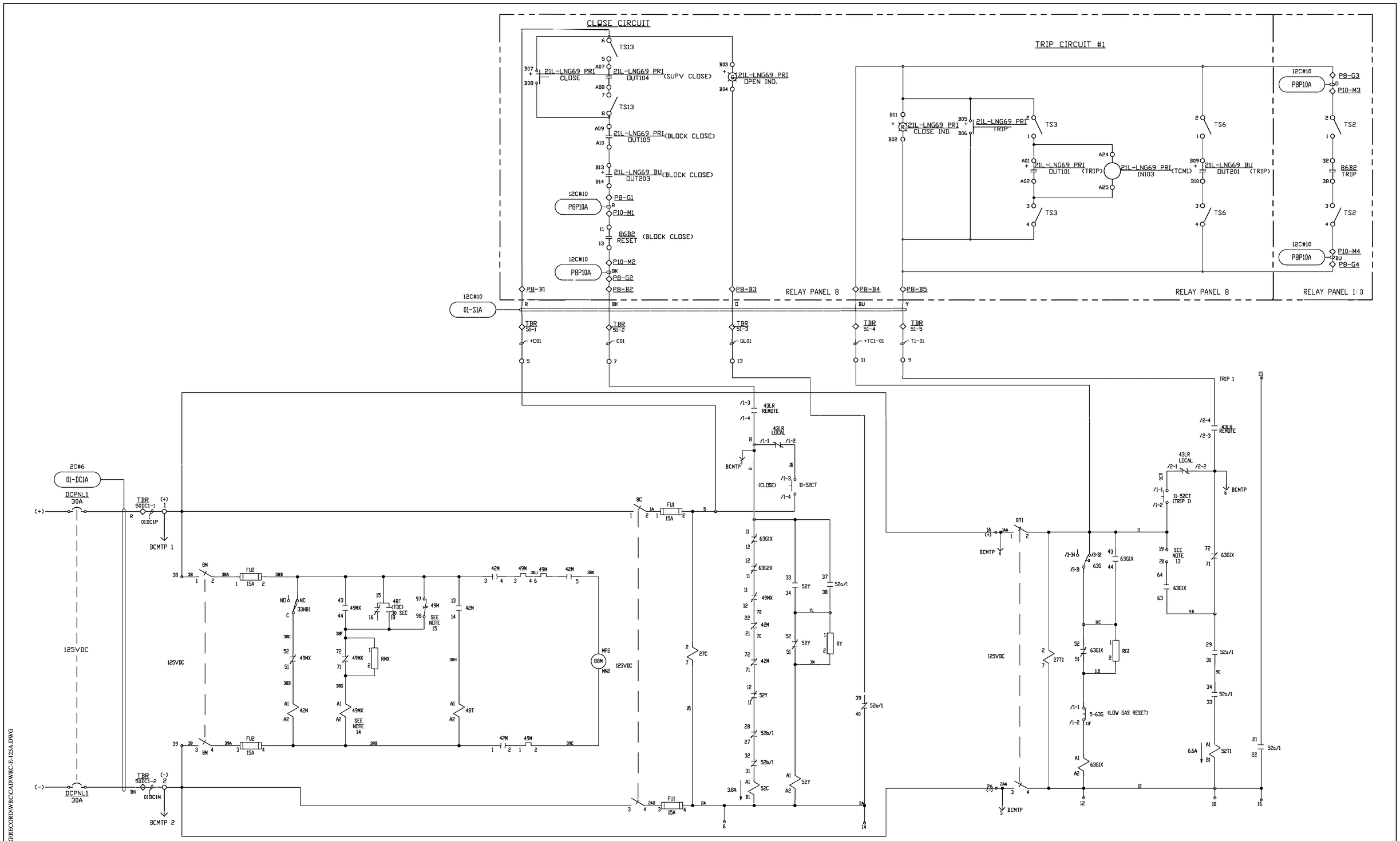

P:\04023\00\DWG\RECORD\WRC\CAD\WRC-E-125A.DWG

DATE	DRAWN BY	NO.	APPROVED BY	REVISION DESCRIPTION
06-20	KLV	1	PJK	CONFORMING TO CONSTRUCTION RECORDS
10-19	SMW	0	PJK	FOR CONSTRUCTION

BLACK HILLS ENERGY

WEST RAPID CITY SUBSTATION
CONTROL SCHEMATIC
CB 6WR01 TRIP #1/CLOSE/MOTOR

DRAWN BY SMW DATE 1-19
APPROVED BY PJK DATE 1-19
DWG NO. WRC-E-125A REVISION 1

DGR ENGINEERING
ROCK RAPIDS, IOWA
(712) 472-2531

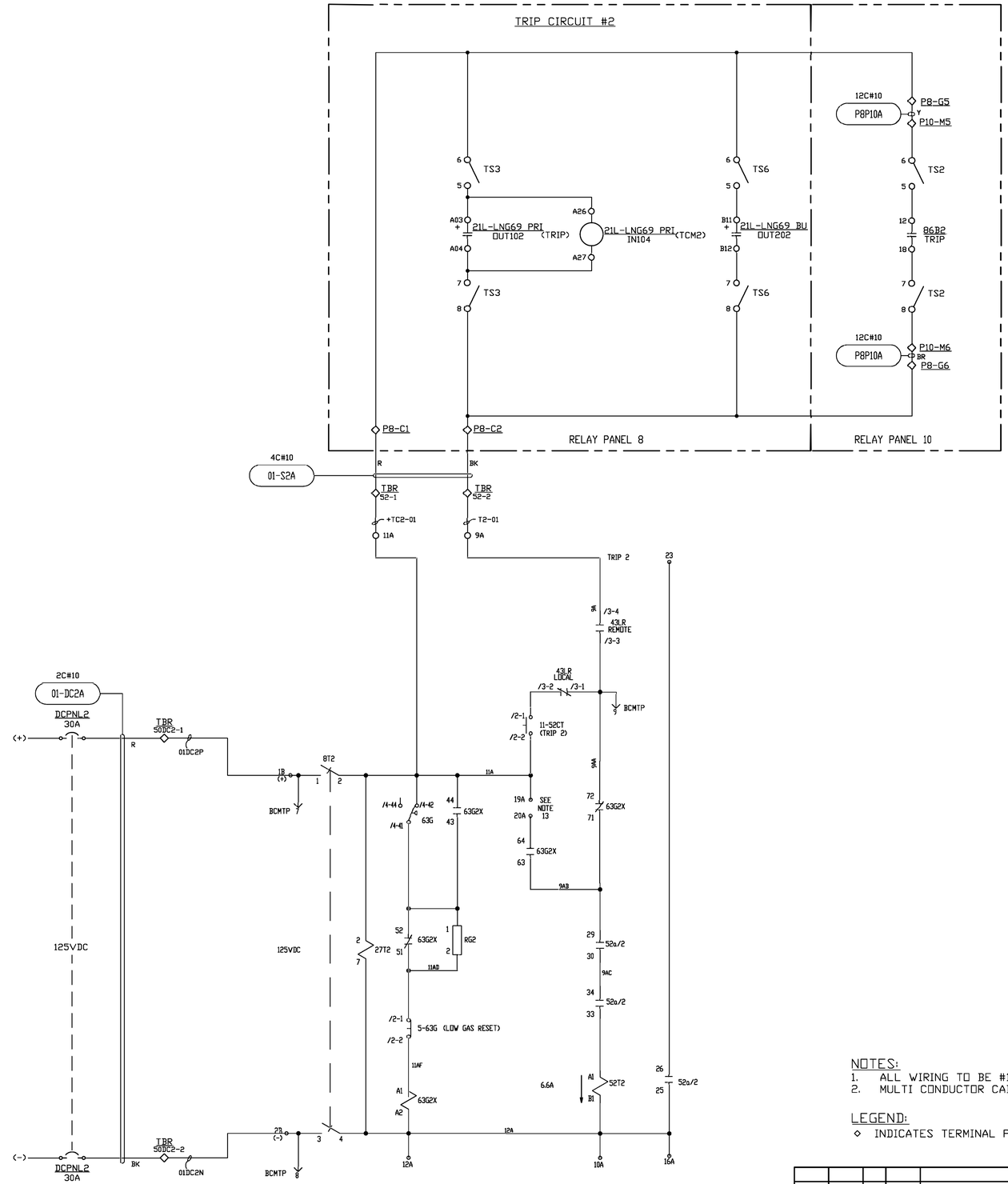

NOTES:
1. ALL WIRING TO BE #12, UNLESS NOTED.
2. MULTI CONDUCTOR CABLE TO BE XHHW-2 WITH CPE JACKET.

LEGEND:
◇ INDICATES TERMINAL POINT

DATE	DRAWN BY	NO.	APPROVED BY	REVISION DESCRIPTION
06-20	KLV	1	PJK	CONFORMING TO CONSTRUCTION RECORDS
10-19	SMW	0	PJK	FOR CONSTRUCTION

BLACK HILLS ENERGY

WEST RAPID CITY SUBSTATION
CONTROL SCHEMATIC
CB 6WR01 TRIP #2

DRAWN BY SMW DATE 1-19
APPROVED BY PJK DATE 1-19
DWG NO. WRC-E-125B REVISION 1

DGR ENGINEERING
ROCK RAPIDS, IOWA
(712) 472-2531

P:\04233\00\DWG\RECORD\WRC\CAD\WRC-E-125B.DWG

AUXILIARY SWITCH CONTACTS 10a,10b

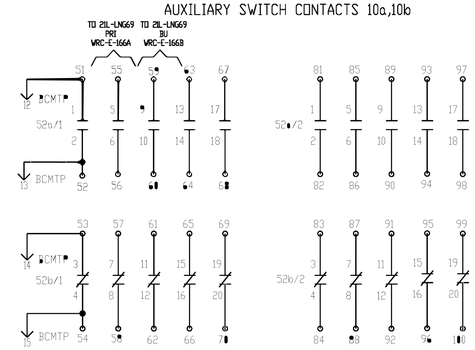

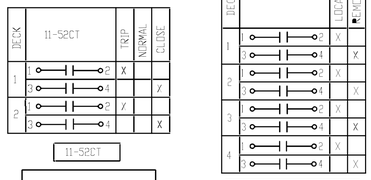

SPRING RETURN TO CENTER

MAINTAINED

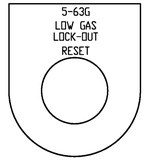

MOMENTARY PUSHBUTTON

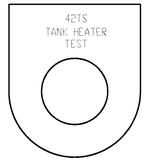

MOMENTARY PUSHBUTTON

NOTES

1. CLOSING SPRING IS DISCHARGED.
2. AUXILIARY SWITCHES ARE SHOWN WITH BREAKER IN OPEN POSITION.
3. RELAY CONTACTS ARE SHOWN DE-ENERGIZED.
4. PRESSURE SWITCHES ARE SHOWN WITH LOW SF6 PRESSURE.
5. KNIFE SWITCHES ARE SHOWN OPEN.
6. AMBIENT TEMPERATURE ABOVE -5°C/23°F
7. —| |— NORMALLY OPEN CONTACT
   —|/|— NORMALLY CLOSED CONTACT
   (TDC)
   —| |— TIME DELAY NORMALLY OPEN CONTACT
   —o o— CLOSED CONTACT OF PRESSURE SWITCH
   —o/ o— CLOSED CONTACT OF LIMIT SWITCH
   —o/ o— NORMALLY OPEN CONTACT WITH HAND RESET
8. WIRE SPECIFICATION
   CABINET HEATER LEAD WIRES - 600V SFF-2 12 AWG (WHITE)
   TANK HEATER LEAD WIRES - 600V TEFLON 12 AWG (WHITE OR BLACK)
   GROUNDING CIRCUITS - 600V 12 AWG SIS (GREEN)
   GFR CIRCUIT - 600V 12 AWG SIS (GRAY)
   ALL OTHER CIRCUITS - 600V 14 AWG SIS (GRAY)
9. CONTROL TERMINAL BLOCKS DESIGNATED BY (o—>
   TYPE AND RATING: GE EB25B12
   TERMINAL SCREW: 10-32 WASHER HEAD
   CAPABLE OF CONNECTION UP TO 10 AWG
   TERMINAL BLOCKS DESIGNATED BY (◎—>
   TYPE AND RATING: MARATHON KULKA 672 GP 06
10. WIRE TERMINATIONS: NON-INSULATED RING TONGUE, COMPRESSION TYPE.
11. WIRE NUMBER IS THE SAME AS THE TERMINAL POINT NUMBER UNLESS OTHERWISE IDENTIFIED.
12. ADDING JUMPERS BETWEEN POINTS TB1A-19 & 20 AND TB1A-19A & 20A ALLOW BREAKER TO TRIP FOR LOW SF6 GAS PRESSURE. BREAKERS SHIPPED WITH JUMPERS REOMVED.
13. TO RESET 49MX OPEN 8C.
14. TO RESET 49M PRESS THE RESET BUTTON ON 49M.
15. 10% SPARE TERMINALS WILL BE PROVIDED.
16. DEVICE 37TH SETTINGS:
    ΔT - 6 SECONDS

    OVER CURRENT - 15 AMPS FAULT

    UNDER CURRENT - SET BY DISCONNECTING A SINGLE FAULT TANK HEATER AND ADJUSTING DIAL UNTIL ALARM ACTUATES.

    NOTE: RUN WIRE THROUGH SENSING LOOP 2 TIMES.
17. TIMER SETTINGS: BLACK IS THE SWITCH

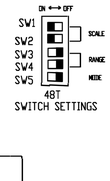

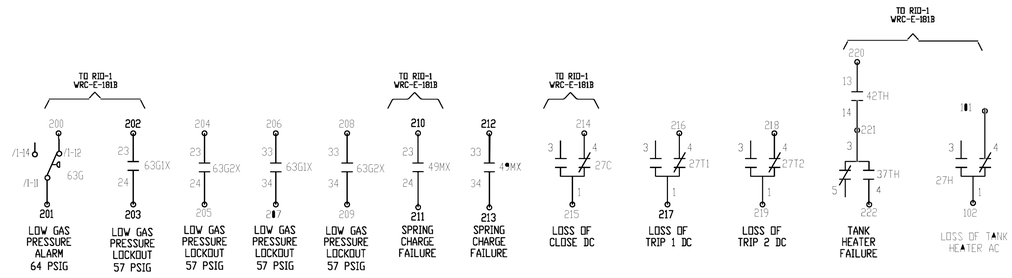

ALARM CONTACTS

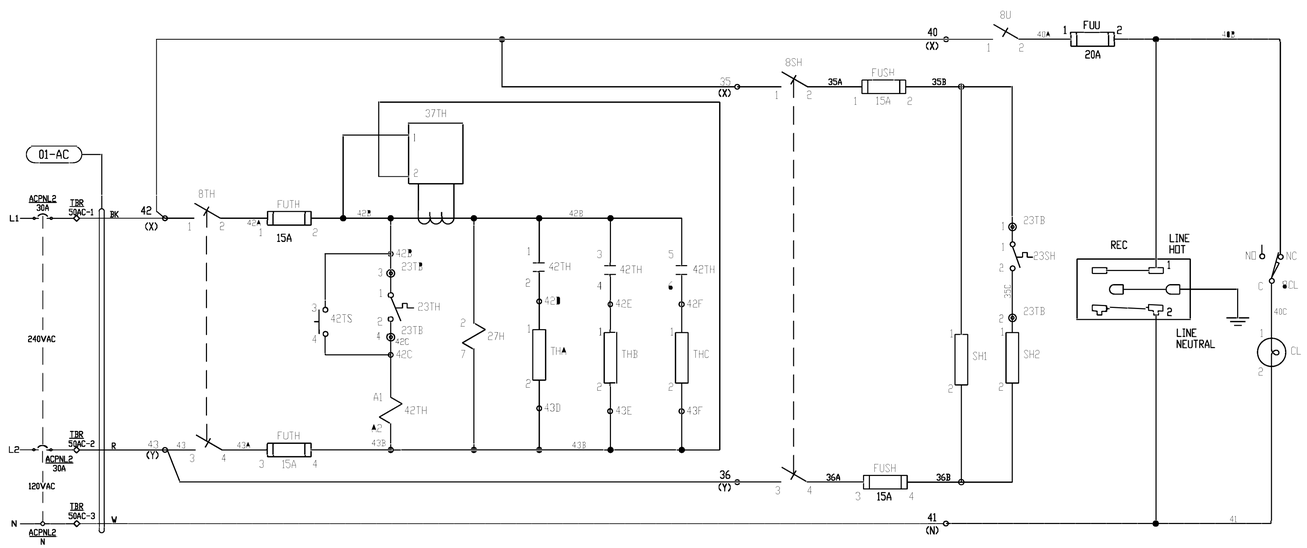

TANK HEATER CIRCUIT

CABINET HEATER CIRCUIT

RECEPTACLE AND LIGHT CIRCUIT

PRESSURE AT NORMAL AMBIENT 20°C (68°F)

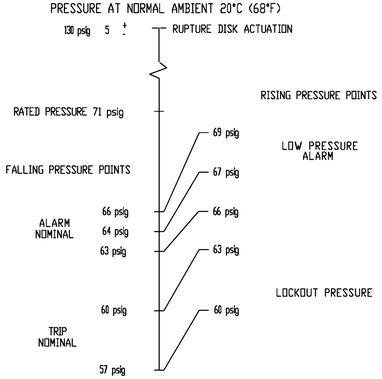

NOTE LOCKOUT WILL ALWAYS OPERATE AT 7 psig BELOW THE ALARM. THERE CANNOT BE A TRIP WITHOUT AN ALARM.

DEVICE	DESCRIPTION	MEPPI #	MANUFACTURER MANF #	
5-63G	5-63G LOW GAS RESET PUSHBUTTON 2 DECKS		SQUARE-D 9001-KR1BH8Y238	V
8C,8M,8T1,8SH,8TH	2 POLE, KNIFE SWITCH, 30A, 600V FRONT CONNECTED	M00082	STATES COMPANY 202-B	M
8CL	CABINET LIGHT SWITCH	M02248	HONEYWELL BA-2R01-AC	
8T2	2 POLE, KNIFE SWITCH, 30A, 600V FRONT CONNECTED		STATES COMPANY 202-B	
8U	SINGLE POLE, KNIFE SWITCH, 30A, 600V FRONT CONNECTED	M00342	STATES COMPANY 201-A	V
11-52CT	MANUAL CLOSE/TRIP CONTROL SWITCH		SQUARE D 9001-KS53BH2Y238	V
23TH	THERMOSTAT, TANK HEATER CLOSES @ -15°C, RESETS @ -10°C		ELMWOOD 3100U-0203-0006	V
23SH	THERMOSTAT ASSY, CABINET HEATERS CLOSES @ -11°C, RESETS @ 10°C	M01011	GE WR50X50 W/WR00X501 THERM	V
23TB	6 PT, 600V, 30A, 10AWG TERMINAL BLOCK		MARATHON 672 GP 06	V
27C,27T1,27T2	125VDC DPDT RELAY LOSS OF VOLTAGE	M01990	SQUARE D 8501KPDR12V63	V
27H	240VAC AUX RELAY	M01992	SQUARE D 8501KPR12V24	V
33HB1	MECHANISM LIMIT SWITCH CHARGED OPEN	M00353	OMRON X-10GM2-B	M
37TH	CURRENT SENSING RELAY		ABB ECSW6MBHT	V
42M	AUX CONTACT ADDER DECK 1A, 1B	M02166	MITSUBISHI UT-AX2B01	V
42M	CONNECTION FOR THRM-OVRLD TO CONTACTOR	M03035	MITSUBISHI UN-TH21	V
42M	MOTOR CONTACTOR, 21A, 125VDC	M03059	MITSUBISHI SD-T21BCDC125V2A2B	V
42TH	200-240VAC CONTACTOR 20A	M01982	MITSUBISHI S-T12(BC)AC200V1A1B	V
42TS	11-52C, 11-52T PUSH BUTTON SWITCH	M00347	SQUARE-D 9001-KR1BH5Y22	V
43LR	LOCAL/REMOTE SELECTOR SWITCH (4 DECKS)		SQUARE D 9001-KS11BH4Y238	V
48T	RELAY, 12-240VDC, 20-240VAC COIL	M03009	C3 CONTROLS ETR-P22CI-30H-2CMV1	V
49M	THERMAL OVERLOAD (4-6) SET @ 5.0A	M03060	MITSUBISHI TH-T25(BC)KP5A	V
63G1X,49MX,52Y,63G2X	48VDC CONTROL RELAY	M02163	MITSUBISHI SRD-T5BCDC48V3A2B	V
63G1X, 49MX, 63G2X, 42M	AUX CONTACT ADDER DECK 1A, 1B	M02166	MITSUBISHI UT-AX2B01	V
52a/1, 52a/2 52a/1.52a/2	AUXILIARY SWITCH, 20a-20b, BM-1	MD100505G01	MITSUBISHI MD100505G01	M
52C	COIL, CLOSE, 125VDC FOR BM-1	M00642	MEPPI M00642	M
52T1,52T2	COIL, DOUBLE TRIP, 125 VDC, BM1	M00647	MEPPI M00647	M
63G	4 POLE GAS SWITCH 64-57 PSIG, -5°C	MD10037BH2	TRAFAG 43125	M
88M	125 VDC, 1PH 200W 240VAC/125VDC	M00367	MEPPI M00367	M
BCMTP	17-POSITION CONNECTOR MALE RECEPTACLE W/FLANGE	M02227	AMP 172516-1	V
CL	LED,BULB,800LUMENS,60W EQUIVMED BASE, A19,120V,85-99W			V
FUSH, FUTH, FU1, FU2	LAMP HOLDER, CLEAR SOCKET 15A, 250V, 2 POLE FUSE	M01962	LEGRAND BUSSMANN RM25030-2SR W/FRN-R-15	S75PWCC10 V
FUU	20A, 250V, 1 POLE FUSE		BUSSMANN RM25030-1SR W/FRN-R-20	V
REC	RECEPTACLE,NON-GFR,20A,125VAC,5-20R	M00944	LEVITON 16352	V
RY,RG1,RMX,RG2	25W 1k OHM	M00106	OHMITE L25J1K	V
SH1,SH2	CABINET HEATER 240VAC, 250W	M00724	HEATREX 565084	M
THA, THB, THC	TANK HEATER, 240VAC, 800W, 40E	MD100180H06	UCDEN SR2560-1	M

DEVICE	FUNCTION
27C	LOSS OF CLOSE DC
27T1	LOSS OF TRIP 1 DC
27T2	LOSS OF TRIP 2 DC
42TH	TANK HEATER CONTACTOR
48T	TIME LIMIT RELAY FOR 42M
49MX	AUXILIARY RELAY FOR 49M
52Y	ANTI PUMPING RELAY
63G1X	AUXILIARY RELAY FOR 63G1
63G2X	AUXILIARY RELAY FOR 63G2

OPERATING CHARACTERISTICS			
DEVICE	NOMINAL VOLTAGE	CURRENT	OPERATING VOLTAGE RANGE
52C	125VDC	3.8 A	90-140 VDC
52T1,52T2	125VDC	6.6 A	70-140 VDC
88M	125VDC	START 25 A RUN 6 A	90-140 VDC

THIS DRAWING WAS CREATED FROM MEPPI DRAWING MD401932, REV. G

P:\04023\00\DWG\RECORD\WRC\CAD\WRC-E-125C.DWG

DGR ENGINEERING
ROCK RAPIDS, IOWA
(712) 472-2531

DATE	DRAWN BY	NO.	APPROVED BY	REVISION DESCRIPTION
06-20	KLV	1	PDK	CONFORMING TO CONSTRUCTION RECORDS
10-19	SMW	0	PDK	FOR CONSTRUCTION

BLACK HILLS ENERGY

WEST RAPID CITY SUBSTATION

AUXILIARY SCHEMATIC
CB 6WR01

DRAWN BY SMW DATE 1-19
APPROVED BY PDK DATE 1-19
DWG NO. WRC-E-125C
SECTION 1 SH 1

CLOSE CIRCUIT

TRIP CIRCUIT #1

RELAY PANEL 8

RELAY PANEL 8

P8-D1 P8-D2 P8-D3 P8-D4 P8-D5

12C#10 04-S1A

4C#10 86T4-04

2C#6 04-DC1A

DCPNL1 30A

TBR 60DC1-1 04DC1P

TBR 60DC1-2 04DC1N

BCMTP 1

BCMTP 2

125VDC

TS14 TS6 TS3 TS12 TS9

21L-LNG69 BU CLOSE

21L-LNG69 BU OUT104 (SUPV CLOSE)

21L-LNG69 BU OPEN IND.

21L-LNG69 BU CLOSE IND.

21L-LNG69 BU TRIP

21L-LNG69 BU OUT101 (TRIP)

21L-LNG69 BU IN103 (TCM1)

21L-LNG69 PRI OUT201 (TRIP)

87L-CT4 OUT201

51-CT4 OUT103

21L-LNG69 BU OUT105 (BLOCK CLOSE)

21L-LNG69 PRI OUT203 (BLOCK CLOSE)

TBR 24-1 TBR F2-1 Y5 86T-4 Y6 TBR F2-2 TBR 24-2

BF CT4

TBR 61-6 TBR F2-3 V9 52G b 86T-4 V10 TBR F2-4

TBR 61-1 TBR 61-2 TBR 61-3 TBR 61-4 TBR 61-5

+C04 C04 GL04 +TC1-04 T1-04

TRIP 1

43LR REMOTE 43LR LOCAL

BCMTP

11-52CT

11-52CT (TRIP 1)

63GIX 63G2X 49MX 52Y 52a/1 52b/1 52C 63G 5-63G (LOW GAS RESET)

FU1 15A FU2 15A

8M 8C 8T1

33HB1 48T (TDC) 30 SEC 42M 49M 52Y RY RMX RG1 27C 27T1 88M MP2 52T1

SEE NOTE 13 SEE NOTE 14 SEE NOTE 15

NOTES:
1. ALL WIRING TO BE #12, UNLESS NOTED.
2. MULTI CONDUCTOR CABLE TO BE XHHW-2 WITH CPE JACKET.

LEGEND:
◇ INDICATES TERMINAL POINT

DATE	DRAWN BY	NO.	APPROVED BY	REVISION DESCRIPTION
06-20	SHW	1	PDK	CONFORMING TO CONSTRUCTION RECORDS
10-19	SHW	0	PDK	FOR CONSTRUCTION

BLACK HILLS ENERGY

WEST RAPID CITY SUBSTATION
CONTROL SCHEMATIC
CB 6WR04 TRIP #1/CLOSE/MOTOR

DRAWN BY SHW DATE 1-19
APPROVED BY PDK DATE 1-19
DWG NO. WRC-E-126A REVISION NO. 1

DGR ENGINEERING
ROCK RAPIDS, IOWA
(712) 472-2531

P:\04233\00DWG\RECORD\WRCCAD\WRC-E-126A.DWG

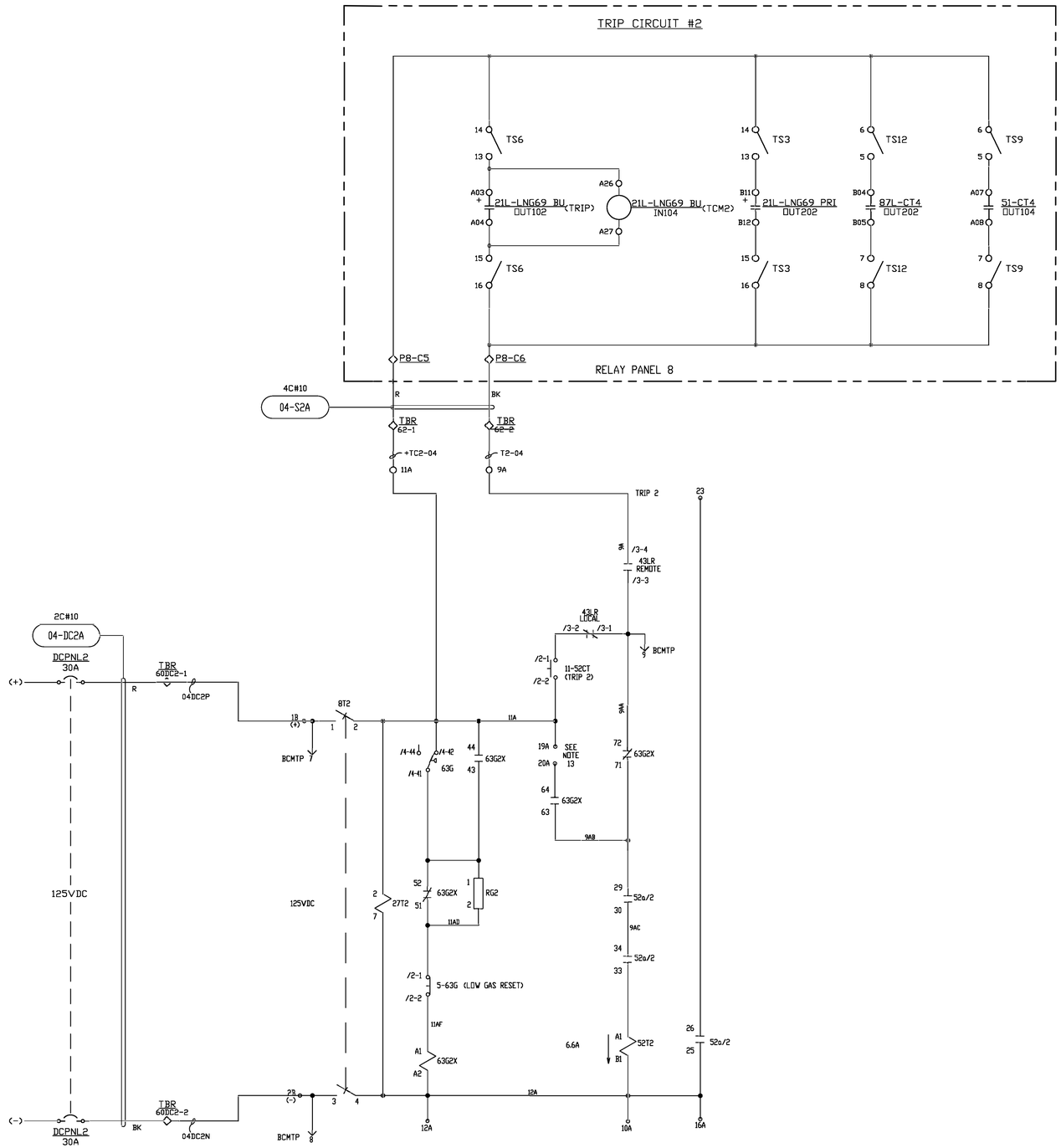

NOTES:
1. ALL WIRING TO BE #12, UNLESS NOTED.
2. MULTI CONDUCTOR CABLE TO BE XHHW-2 WITH CPE JACKET.

LEGEND:
◇ INDICATES TERMINAL POINT

P:\04233\00\DWG\RECORD\WRCCAD\WRC-E-126B.DWG

DGR ENGINEERING
ROCK RAPIDS, IOWA
(712) 472-2531

DATE	DRAWN BY	NO.	APPROVED BY	REVISION DESCRIPTION
06-20	SMW	1	PDK	CONFORMING TO CONSTRUCTION RECORDS
10-19	SMW	0	PDK	FOR CONSTRUCTION

BLACK HILLS ENERGY

WEST RAPID CITY SUBSTATION
CONTROL SCHEMATIC
CB 6WR04 TRIP #2

DRAWN BY SMW DATE 1-19
APPROVED BY PDK DATE 1-19
DWG NO. WRC-E-126B REVISION 1

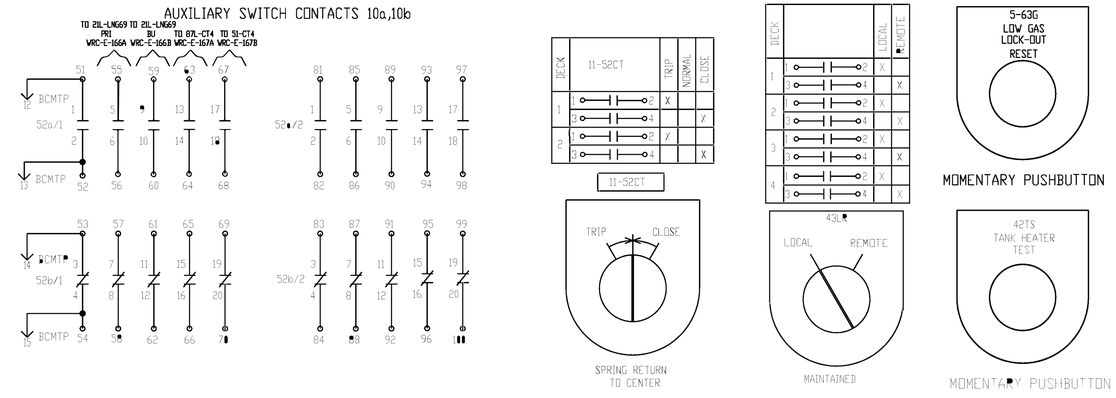

NOTES

1. CLOSING SPRING IS DISCHARGED.
2. AUXILIARY SWITCHES ARE SHOWN WITH BREAKER IN OPEN POSITION.
3. RELAY CONTACTS ARE SHOWN DE-ENERGIZED.
4. PRESSURE SWITCHES ARE SHOWN WITH LOW SF6 PRESSURE.
5. KNIFE SWITCHES ARE SHOWN OPEN.
6. AMBIENT TEMPERATURE ABOVE -5°C/23°F
7. —| |— NORMALLY OPEN CONTACT
   —|/|— NORMALLY CLOSED CONTACT
   (TDC)
   —| |— TIME DELAY NORMALLY OPEN CONTACT
   —o— CLOSED CONTACT OF PRESSURE SWITCH
   —o— CLOSED CONTACT OF LIMIT SWITCH
   —o— NORMALLY OPEN CONTACT WITH HAND RESET
8. WIRE SPECIFICATION
   CABINET HEATER LEAD WIRES - 600V SFF-2 12 AWG (WHITE)
   TANK HEATER LEAD WIRES - 600V TEFLON 12 AWG (WHITE OR BLACK)
   GROUNDING CIRCUITS - 600V 12 AWG SIS (GREEN)
   GFR CIRCUIT - 600V 12 AWG SIS (GRAY)
   ALL OTHER CIRCUITS - 600V 14 AWG SIS (GRAY)
9. CONTROL TERMINAL BLOCKS DESIGNATED BY (—o→
   TYPE AND RATING: GE EB25B12
   TERMINAL SCREW: 10-32 WASHER HEAD
   CAPABLE OF CONNECTION UP TO 10 AWG
   TERMINAL BLOCKS DESIGNATED BY (—◎→
   TYPE AND RATING: MARATHON KULKA 672 GP 06
10. WIRE TERMINATIONS: NON-INSULATED RING TONGUE, COMPRESSION TYPE.
11. WIRE NUMBER IS THE SAME AS THE TERMINAL POINT NUMBER UNLESS OTHERWISE IDENTIFIED.
12. ADDING JUMPERS BETWEEN POINTS TB1A-19 & 20 AND TB1A-19A & 20A ALLOW BREAKER TO TRIP FOR LOW SF6 GAS PRESSURE. BREAKERS SHIPPED WITH JUMPERS REMOVED.
13. TO RESET 49MX OPEN 8C.
14. TO RESET 49M PRESS THE RESET BUTTON ON 49M.
15. 10% SPARE TERMINALS WILL BE PROVIDED.
16. DEVICE 37TH SETTINGS:
    ΔT - 6 SECONDS

    OVER CURRENT - 15 AMPS FAULT

    UNDER CURRENT - SET BY DISCONNECTING A SINGLE FAULT TANK HEATER AND ADJUSTING DIAL UNTIL ALARM ACTUATES.

    NOTE: RUN WIRE THROUGH SENSING LOOP 2 TIMES.

17. TIMER SETTINGS: BLACK IS THE SWITCH

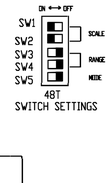

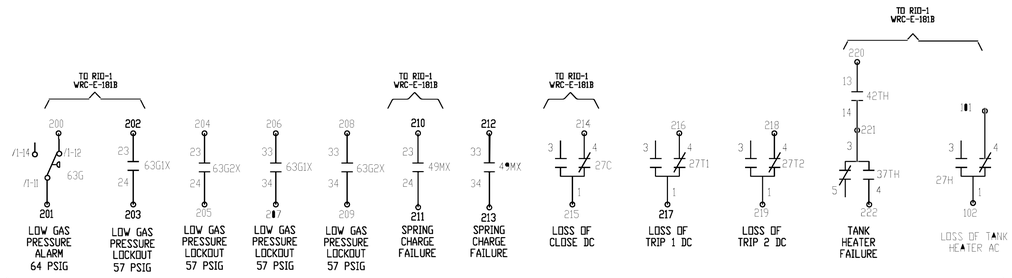

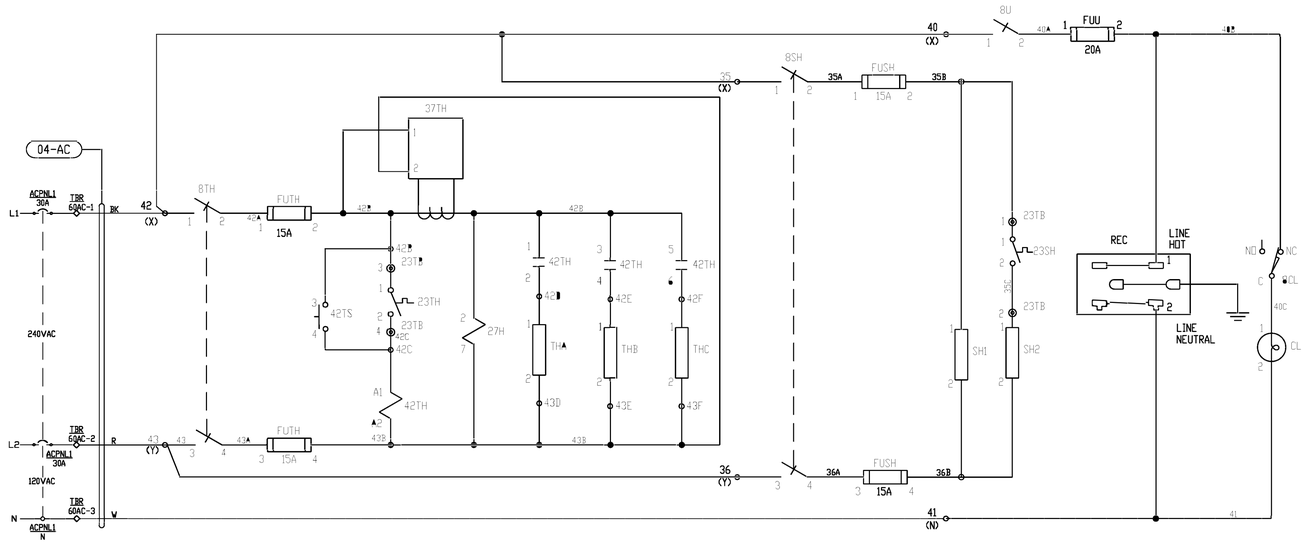

DEVICE	DESCRIPTION	MEPPI #	MANUFACTURER MANF #	
5-63G	5-63G LOW GAS RESET PUSHBUTTON 2 DECKS		SQUARE-D 9001-KR1BH8Y238	V
8C,8M,8T1,8SH,8TH	2 POLE, KNIFE SWITCH, 30A, 600V FRONT CONNECTED	M00102	STATES COMPANY 202-B	V
8CL	CABINET LIGHT SWITCH	M00248	HONEYWELL BA-2R01-AC	M
8T2	2 POLE, KNIFE SWITCH, 30A, 600V FRONT CONNECTED		STATES COMPANY 202-B	
8U	SINGLE POLE, KNIFE SWITCH, 30A, 600V FRONT CONNECTED	M00342	STATES COMPANY 201-A	V
11-52CT	MANUAL CLOSE/TRIP CONTROL SWITCH		SQUARE D 9001-KS53BH2Y238	V
23TH	THERMOSTAT, TANK HEATER CLOSES @ -15°C, RESETS @ -10°C		ELMWOOD 3100U-0208-0006	V
23SH	THERMOSTAT ASSY, CABINET HEATERS CLOSES @ -11°C, RESETS @ 10°C	M00011	GE WR50X50 W/WR00X501 THERM	V
23TB	6 PT, 600V, 30A, 10AWG TERMINAL BLOCK		MARATHON 672 GP 06	V
27C,27T1,27T2	125VDC DPDT RELAY LOSS OF VOLTAGE	M01990	SQUARE D 8501KPDR12V63	V
27H	240VAC AUX RELAY	M01992	SQUARE D 8501KPR12V24	V
33HB1	MECHANISM LIMIT SWITCH CHARGED OPEN SPST	M00353	OMRON X-10GM2-B	M
37TH	CURRENT SENSING RELAY		ABB ECSW6MBHT	V
42M	AUX CONTACT ADDER DECK 1A, 1B	M02166	MITSUBISHI UT-AX2BC1A1B	V
42M	CONNECTION FOR THERMAL OVERLD TO CONTACTOR	M03035	MITSUBISHI UN-THP1	V
42M	MOTOR CONTACTOR, 21A, 125VDC	M03059	MITSUBISHI SD-T21BCDC125V2A2B	V
42TH	200-240VAC CONTACTOR 20A	M01982	MITSUBISHI S-T12(BC)AC200V1A1B	V
42TS	11-52C, 11-52T PUSH BUTTON SWITCH	M00347	SQUARE-D 9001-KR1BH5Y22	V
43LR	LOCAL/REMOTE SELECTOR SWITCH (4 DECKS)		SQUARE D 9001-KS11BH4Y238	V
48T	RELAY, 12-24VDC, 20-240VAC COIL	M03009	C3 CONTROLS ETR-P22KCJ-30H-2CMV1	V
49M	THERMAL OVERLOAD (4-6) SET @ 5.0A	M03060	MITSUBISHI TH-T25(BC)KP5A	V
63G1X,49MX,52Y,63G2X	48VDC CONTROL RELAY	M02163	MITSUBISHI SRD-T5BCDC48V3A2B	V
63G1X, 49MX, 63G2X, 42M	AUX CONTACT ADDER DECK 1A, 1B	M02166	MITSUBISHI UT-AX2BC1A1B	V
52a/1, 52a/2 52a/1,52b/2	AUXILIARY SWITCH, 20a-20b, BM-1	MD100505G01	MITSUBISHI MD100505G01	M
52C	COIL, CLOSE, 125VDC FOR BM-1	M00642	MEPPI M00642	M
52T1,52T2	COIL, DOUBLE TRIP, 125 VDC, BM1	M00647	MEPPI M00647	M
63G	4 POLE GAS SWITCH 64-57 PSIG, -5°C	MD100378H02	TRAFAG 43125	M
88M	125 VDC, BM 200W 300W @ 240VAC/125VDC	M00367	MEPPI M00367	M
BCMTP	17 POSITION CONNECTOR MALE RECEPTACLE W/FLANGE	M02227	AMP 172516-1	V
CL	LED BULB,800 LUMENS,60W EQUIVMED BASE, A19,120V,85-99W			V
FUSH, FUTH, FU1, FU2	LAMP HOLDER, CLEAR SOCKET 15A, 250V, 2 POLE FUSE	M01962	LEGRAND S752WCC10 BUSSMANN RM25030-2SR W/FRN-R-15	V
FUU	20A, 250V, 1 POLE FUSE		BUSSMANN RM25030-1SR W/FRN-R-20	V
REC	RECEPTACLE,NON-GFR,20A,125VAC,5-20R	M00944	LEVITON 16352	V
RY,RG1,RMX,RG2	25W 1k OHM	M00106	OHMITE L25J1K0	V
SH1,SH2	CABINET HEATER 240VAC, 250W	M00724	HEATREX 565084	M
THA, THB, THC	TANK HEATER, 240VAC, 800W, 40E	MD100[illegible]H06	UCHEN SR2560-1	M

PRESSURE AT NORMAL AMBIENT 20°C (68°F)

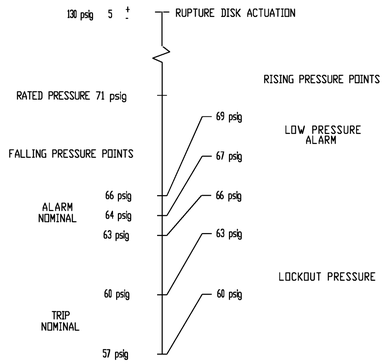

NOTE LOCKOUT WILL ALWAYS OPERATE AT 7 psig BELOW THE ALARM. THERE CANNOT BE A TRIP WITHOUT AN ALARM.

DEVICE	FUNCTION
27C	LOSS OF CLOSE DC
27T1	LOSS OF TRIP 1 DC
27T2	LOSS OF TRIP 2 DC
42TH	TANK HEATER CONTACTOR
48T	TIME LIMIT RELAY FOR 42M
49MX	AUXILIARY RELAY FOR 49M
52Y	ANTI PUMPING RELAY
63G1X	AUXILIARY RELAY FOR 63G1
63G2X	AUXILIARY RELAY FOR 63G2

OPERATING CHARACTERISTICS			
DEVICE	NOMINAL VOLTAGE	CURRENT	OPERATING VOLTAGE RANGE
52C	125VDC	3.8 A	90-140 VDC
52T1,52T2	125VDC	6.6 A	70-140 VDC
88M	125VDC	START 25 A RUN 6 A	90-140 VDC

THIS DRAWING WAS CREATED FROM MEPPI DRAWING MD401932, REV. G

P:\04023\00\DWG\RECORD\WRC\CAD\WRC-E-126C.DWG

DGR ENGINEERING
ROCK RAPIDS, IOWA
(712) 472-2531

DATE	DRAWN BY	NO.	APPROVED BY	REVISION DESCRIPTION
06-20	SMW	1	PDK	CONFORMING TO CONSTRUCTION RECORDS
10-19	SMW	0	PDK	FOR CONSTRUCTION

BLACK HILLS ENERGY

WEST RAPID CITY SUBSTATION

AUXILIARY SCHEMATIC

CB 6WR04

DRAWN BY SMW DATE 1-19
APPROVED BY PDK DATE 1-19
DWG NO. WRC-E-126C REVISION 1

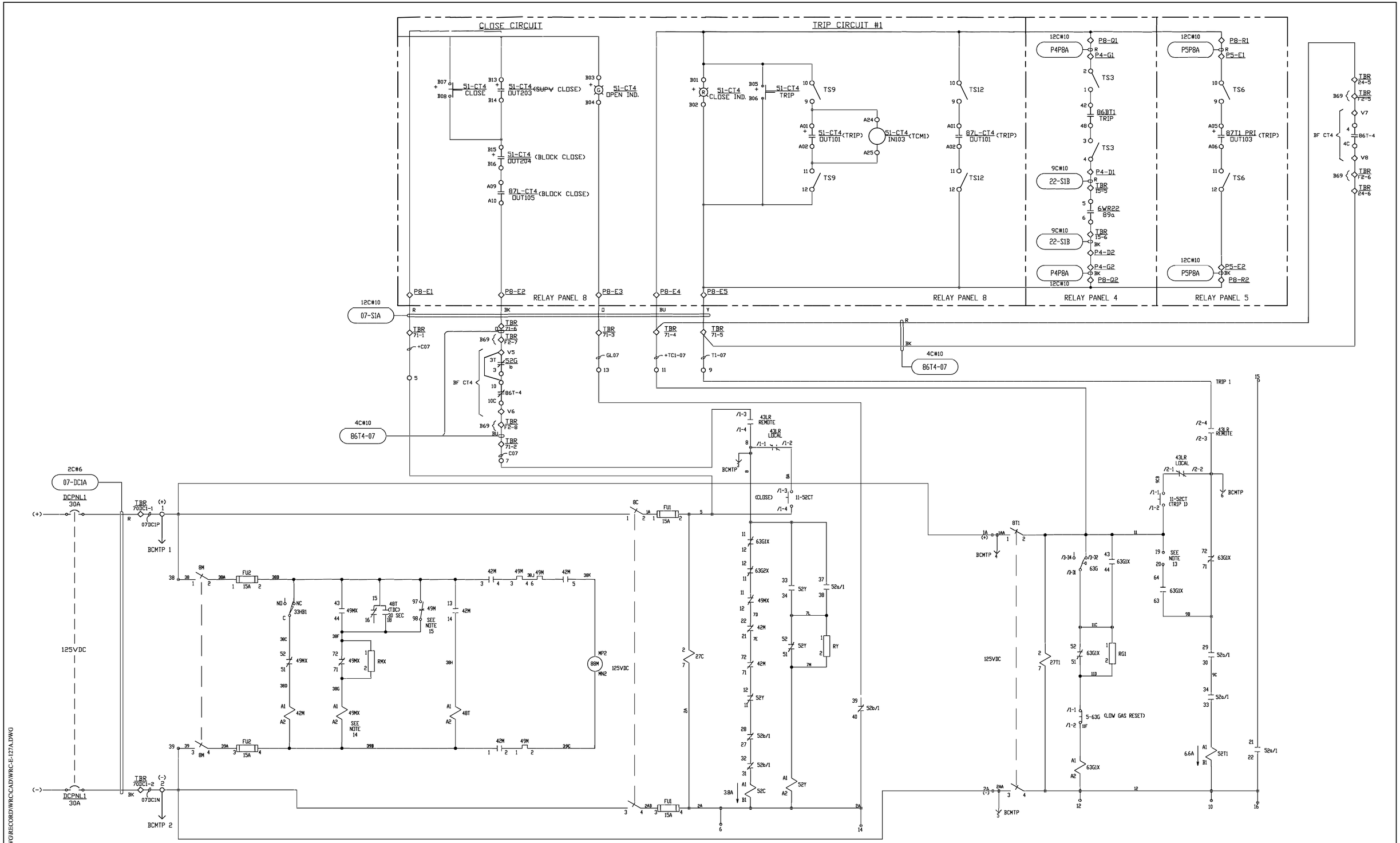

NOTES:
1. ALL WIRING TO BE #12, UNLESS NOTED.
2. MULTI CONDUCTOR CABLE TO BE XHHW-2 WITH CPE JACKET.

LEGEND:
◇ INDICATES TERMINAL POINT

P:\04\233\00\DWG\RECORD\WRC\CAD\WRC-E-127A.DWG

DGR ENGINEERING
ROCK RAPIDS, IOWA
(712) 472-2531

DATE	DRAWN BY	NO.	APPROVED BY	REVISION DESCRIPTION
06-20	SMW	1	PDK	CONFORMING TO CONSTRUCTION RECORDS
10-19	SMW	0	PDK	FOR CONSTRUCTION

BLACK HILLS ENERGY
WEST RAPID CITY SUBSTATION
CONTROL SCHEMATIC
CB 6WR07 TRIP #1/CLOSE/MOTOR

DRAWN BY SMW DATE 1-19
APPROVED BY PDK DATE 1-19
DWG NO. WRC-E-127A REVISION NO. 1

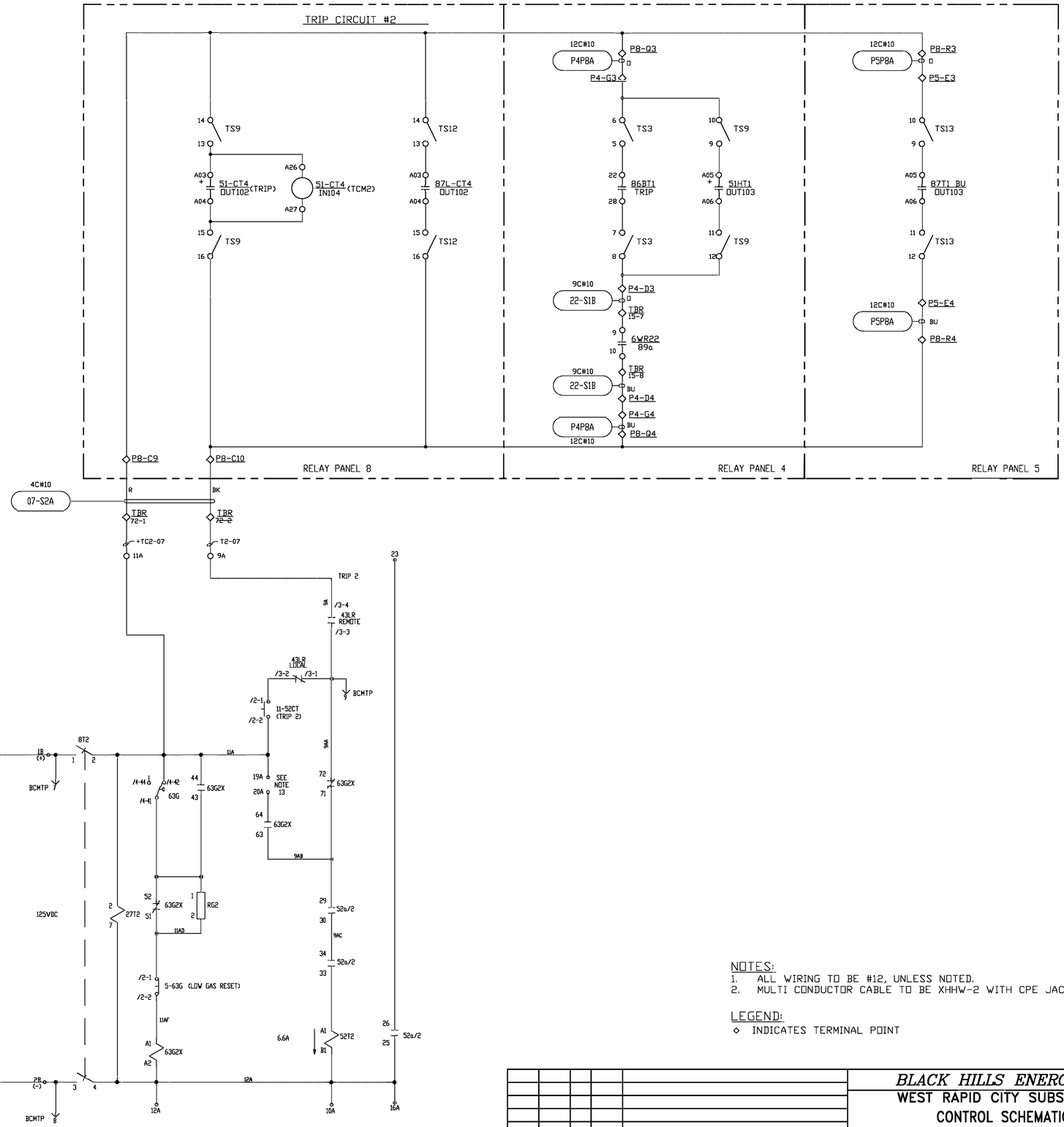

NOTES:
1. ALL WIRING TO BE #12, UNLESS NOTED.
2. MULTI CONDUCTOR CABLE TO BE XHHW-2 WITH CPE JACKET.

LEGEND:
◇ INDICATES TERMINAL POINT

DATE	DRAWN BY	NO.	APPROVED BY	REVISION DESCRIPTION
06-20	SMW	1	PJK	CONFORMING TO CONSTRUCTION RECORDS
10-19	SMW	0	PJK	FOR CONSTRUCTION

BLACK HILLS ENERGY

WEST RAPID CITY SUBSTATION
CONTROL SCHEMATIC
CB 6WR07 TRIP #2

DRAWN BY SMW DATE 1-19
APPROVED BY PJK DATE 1-19
DWG NO. WRC-E-127B
REVISION 1

DGR ENGINEERING
ROCK RAPIDS, IOWA
(712) 472-2531

P:\04233\00\DWG\RECORD\WRCCAD\WRC-E-127B.DWG

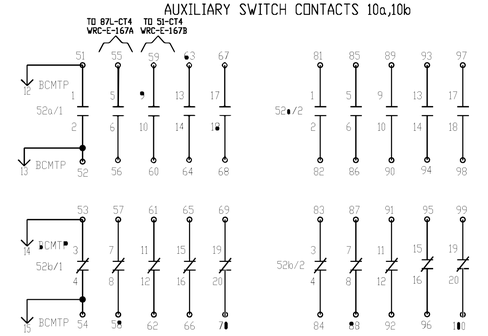

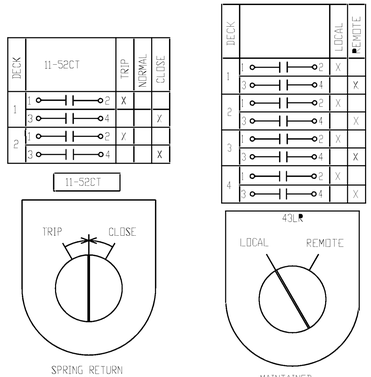

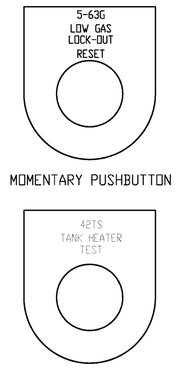

NOTES

1. CLOSING SPRING IS DISCHARGED.
2. AUXILIARY SWITCHES ARE SHOWN WITH BREAKER IN OPEN POSITION.
3. RELAY CONTACTS ARE SHOWN DE-ENERGIZED.
4. PRESSURE SWITCHES ARE SHOWN WITH LOW SF6 PRESSURE.
5. KNIFE SWITCHES ARE SHOWN OPEN.
6. AMBIENT TEMPERATURE ABOVE -5°C/23°F
7. —| |— NORMALLY OPEN CONTACT
   —|/|— NORMALLY CLOSED CONTACT
   (TDC)
   —| |— TIME DELAY NORMALLY OPEN CONTACT
   —o— CLOSED CONTACT OF PRESSURE SWITCH
   —o— CLOSED CONTACT OF LIMIT SWITCH
   —o— NORMALLY OPEN CONTACT WITH HAND RESET
8. WIRE SPECIFICATION
   CABINET HEATER LEAD WIRES - 600V SFF-2 12 AWG (WHITE)
   TANK HEATER LEAD WIRES - 600V TEFLON 12 AWG (WHITE OR BLACK)
   GROUNDING CIRCUITS - 600V 12 AWG SIS (GREEN)
   GFR CIRCUIT - 600V 12 AWG SIS (GRAY)
   ALL OTHER CIRCUITS - 600V 14 AWG SIS (GRAY)
9. CONTROL TERMINAL BLOCKS DESIGNATED BY (o—⟶
   TYPE AND RATING: GE EB25B12
   TERMINAL SCREW: 10-32 WASHER HEAD
   CAPABLE OF CONNECTION UP TO 10 AWG
   TERMINAL BLOCKS DESIGNATED BY (◎⟶
   TYPE AND RATING: MARATHON KULKA 672 GP 06
10. WIRE TERMINATIONS: NON-INSULATED RING TONGUE, COMPRESSION TYPE.
11. WIRE NUMBER IS THE SAME AS THE TERMINAL POINT NUMBER UNLESS OTHERWISE IDENTIFIED.
12. ADDING JUMPERS BETWEEN POINTS TB1A-19 & 20 AND TB1A-19A & 20A ALLOW BREAKER TO TRIP FOR LOW SF6 GAS PRESSURE. BREAKERS SHIPPED WITH JUMPERS REMOVED.
13. TO RESET 49MX OPEN 8C.
14. TO RESET 49M PRESS THE RESET BUTTON ON 49M.
15. 10% SPARE TERMINALS WILL BE PROVIDED.
16. DEVICE 37TH SETTINGS:
    ΔT - 6 SECONDS

    OVER CURRENT - 15 AMPS FAULT

    UNDER CURRENT - SET BY DISCONNECTING A SINGLE FAULT TANK HEATER AND ADJUSTING DIAL UNTIL ALARM ACTUATES.

    NOTE: RUN WIRE THROUGH SENSING LOOP 2 TIMES.

17. TIMER SETTINGS: BLACK IS THE SWITCH

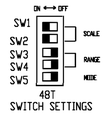

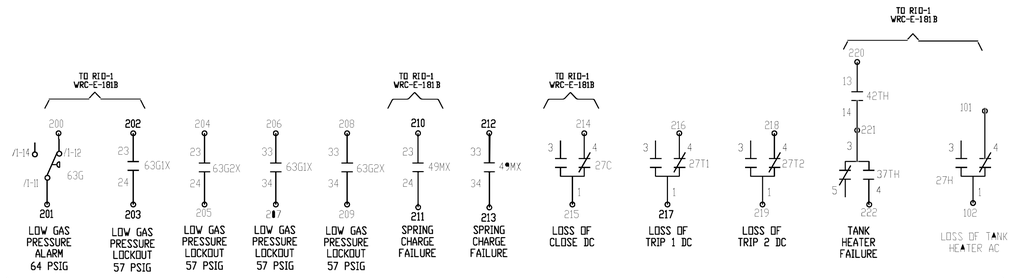

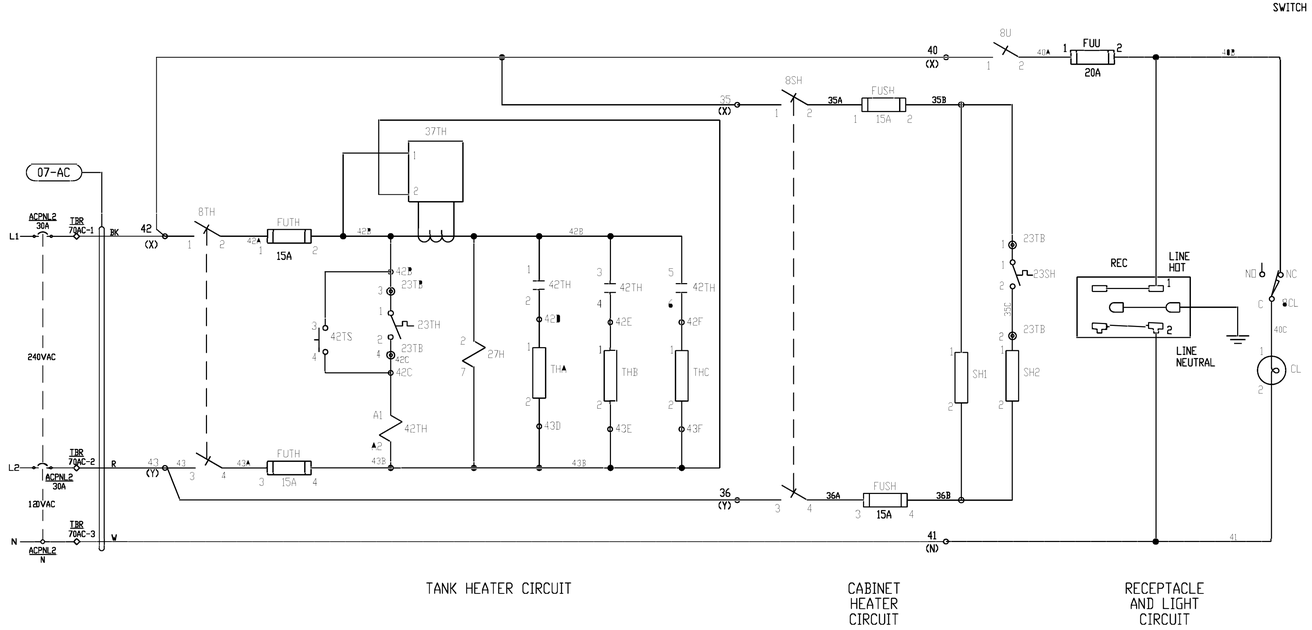

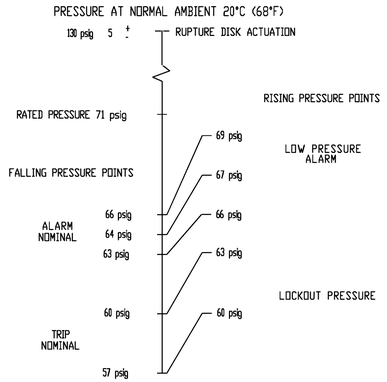

DEVICE	DESCRIPTION	MEPPI #	MANUFACTURER MANF. #	
5-63G	5-63G LOW GAS RESET PUSHBUTTON 2 DECKS		SQUARE-D 9001-KR1BH8Y238	V
8C,8M,8T1,8SH,8TH	2 POLE, KNIFE SWITCH, 30A, 600V FRONT CONNECTED	M00082	STATES COMPANY 202-B	V
8CL	CABINET LIGHT SWITCH	M02248	HONEYWELL BA-2R01-AC	M
8T2	2 POLE, KNIFE SWITCH, 30A, 600V FRONT CONNECTED		STATES COMPANY 202-B	
8U	SINGLE POLE, KNIFE SWITCH, 30A, 600V FRONT CONNECTED	M00342	STATES COMPANY 201-A	V
11-52CT	MANUAL CLOSE/TRIP CONTROL SWITCH		SQUARE D 9001-KS53BH2Y238	V
23TH	THERMOSTAT, TANK HEATER CLOSES @ -15°C, RESETS @ -10°C		ELMWOOD 3100U-0203-0006	V
23SH	THERMOSTAT ASSY, CABINET HEATERS CLOSES @ -11°C, RESETS @ 10°C	M01011	GE WR50X50 W/WR00X501 THERM	V
23TB	6 PT, 600V, 30A, 10AWG TERMINAL BLOCK		MARATHON 672 GP 06	V
27C,27T1,27T2	125VDC DPDT RELAY LOSS OF VOLTAGE	M01990	SQUARE D 8501KPDR12V63	V
27H	240VAC AUX RELAY	M01992	SQUARE D 8501KPR12V24	V
33HB1	MECHANISM LIMIT SWITCH CHARGED OPEN SPST	M00353	OMRON X-10GM2-B	M
37TH	CURRENT SENSING RELAY		ABB ECSW6MBHT	V
42M	AUX CONTACT ADDER DECK 1A, 1B	M02166	MITSUBISHI UT-AX2BC1A1B	V
42M	CONNECTION FOR THERM-OVRLD TO CONTACTOR	M03035	MITSUBISHI UN-TH21	V
42M	MOTOR CONTACTOR, 21A, 125VDC	M03059	MITSUBISHI SD-T21BCDC125V2A2B	V
42TH	200-240VAC CONTACTOR 20A	M01982	MITSUBISHI S-T12(BC)AC200V1A1B	V
42TS	11-52C, 11-52T PUSH BUTTON SWITCH	M00347	SQUARE-D 9001-KR1BH5Y22	V
43LR	LOCAL/REMOTE SELECTOR SWITCH (4 DECKS)		SQUARE D 9001-KS11BH4Y238	V
48T	RELAY, 12-24VDC, 20-240VAC COIL	M03009	C3 CONTROLS ETR-P22CI-30H-2CMV1	V
49M	THERMAL OVERLOAD (4-6) SET @ 5.0A	M03060	MITSUBISHI TH-T25(BC)KP5A	V
63G1X,49MX,52Y,63G2X	48VDC CONTROL RELAY	M02163	MITSUBISHI SRD-T5BCDC48V3A2B	V
63G1X, 49MX, 63G2X, 42M	AUX CONTACT ADDER DECK 1A, 1B	M02166	MITSUBISHI UT-AX2BC1A1B	V
52a/1, 52a/2 52a/1,52b/2	AUXILIARY SWITCH, 20a-20b, BM-1	MD100505G01	MITSUBISHI MD100505G01	M
52C	COIL, CLOSE, 125VDC FOR BM-1	M00642	MEPPI M00642	M
52T1,52T2	COIL, DOUBLE TRIP, 125 VDC, BM1	M00647	MEPPI M00647	M
63G	4 POLE GAS SWITCH 64-57 PSIG, -5°C	MD100378H2	TRAFAG 43125	M
88M	125 VDC, BM 200W 300W 120VAC/125VDC	M00367	MEPPI M00367	M
BCMTP	17 POSITION CONNECTOR MALE RECEPTACLE W/FLANGE	M02227	AMP 172516-1	V
CL	LED BULB,800 LUMENS,60W EQUIVMED BASE, A19,120V,85-99W			V
FUSH, FUTH, FU1, FU2	LAMP HOLDER, CLEAT SOCKET	M01962	LEGRAND S75PWCC10	V
FUU	15A, 250V, 2 POLE FUSE		BUSSMANN RM25030-2SR W/FRN-R-15	V
REC	20A, 250V, 1 POLE FUSE		BUSSMANN RM25030-1SR W/FRN-R-20	V
RY,RG1,RMX,RG2	RECEPTACLE,NON-GFR,20A,125VAC,5-20R	M00944	LEVITON 16352	V
SH1,SH2	25W 1k OHM	M00106	OHMITE L25J1K0	V
THA, THB, THC	CABINET HEATER 240VAC, 250W	M00724	HEATREX 565084	M
	TANK HEATER, 240VAC, 800W, 40E	MD100180H06	USCEN SR2560-1	M

DEVICE	FUNCTION
27C	LOSS OF CLOSE DC
27T1	LOSS OF TRIP 1 DC
27T2	LOSS OF TRIP 2 DC
42TH	TANK HEATER CONTACTOR
48T	TIME LIMIT RELAY FOR 42M
49MX	AUXILIARY RELAY FOR 49M
52Y	ANTI PUMPING RELAY
63G1X	AUXILIARY RELAY FOR 63G1
63G2X	AUXILIARY RELAY FOR 63G2

OPERATING CHARACTERISTICS

DEVICE	NOMINAL VOLTAGE	CURRENT	OPERATING VOLTAGE RANGE
52C	125VDC	3.8 A	90-140 VDC
52T1,52T2	125VDC	6.6 A	70-140 VDC
88M	125VDC	START 25 A RUN 6 A	90-140 VDC

THIS DRAWING WAS CREATED FROM MEPPI DRAWING MD401932, REV. G

P:\04023\00\DWG\RECORD\WRCCAD\WRC-E-127C.DWG

DGR ENGINEERING
ROCK RAPIDS, IOWA
(712) 472-2531

DATE	DRAWN BY	NO.	APPROVED BY	REVISION DESCRIPTION
06-20	SMW	1	PDK	CONFORMING TO CONSTRUCTION RECORDS
10-19	SMW	0	PDK	FOR CONSTRUCTION

BLACK HILLS ENERGY

WEST RAPID CITY SUBSTATION

AUXILIARY SCHEMATIC
CB 6WR07

DRAWN BY SMW DATE 1-19 | DWGNO. WRC-E-127C | SECTION 1 | SH 1
APPROVED BY PDK DATE 1-19

SEL-9510

101-6WR10		
I/O	FUNCTION	DRAWING REFERENCE
01 + CLOSE 02	MANUAL CLOSE 6WR10	THIS DRAWING
03 CLOSE 04		
05 CLOSED 06	6WR10 CLOSE IND	THIS DRAWING
08 OPEN 09	6WR10 OPEN IND	THIS DRAWING
10 TRIP 11		
12 + TRIP 13	MANUAL TRIP 6WR10	THIS DRAWING

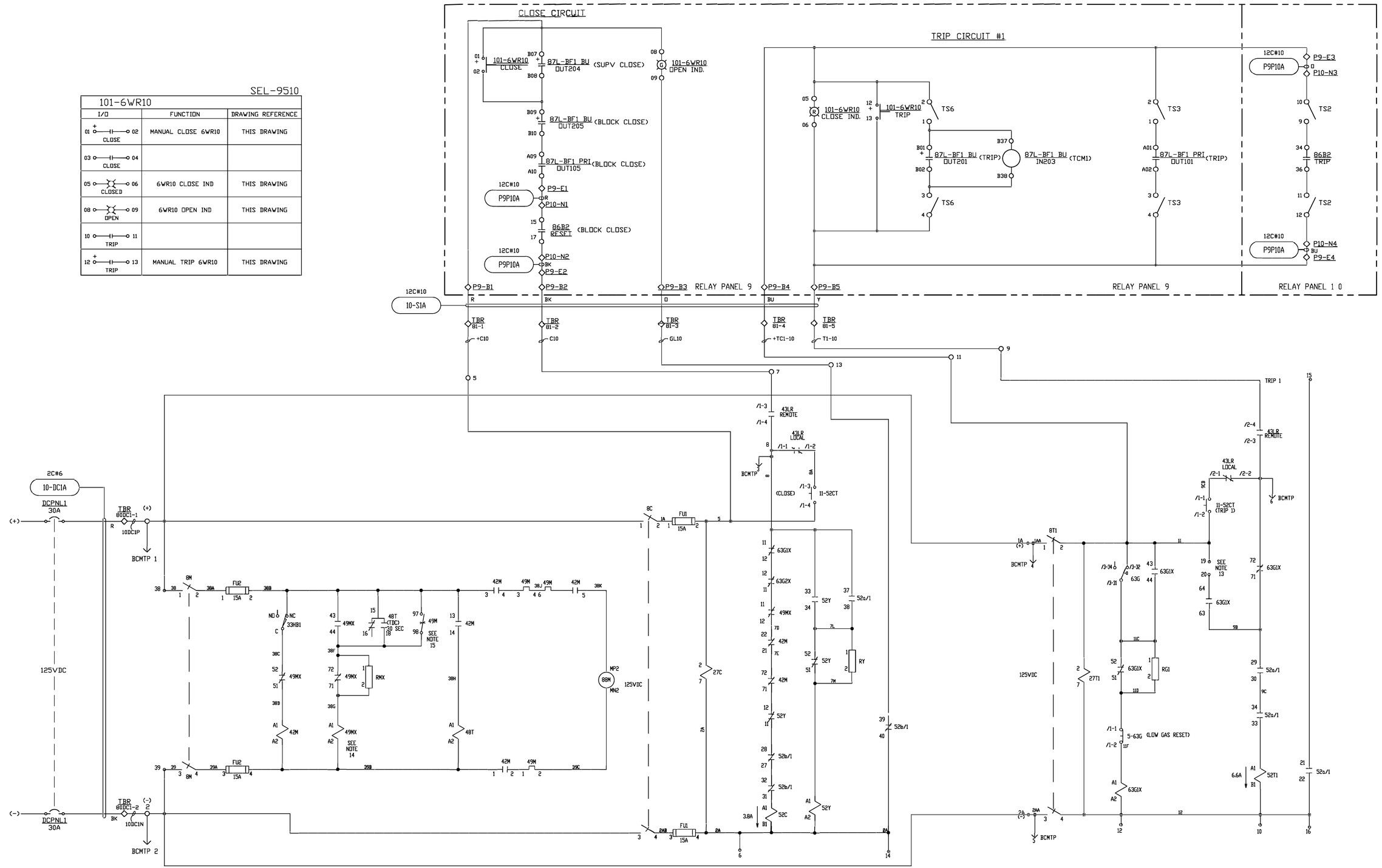

NOTES:
1. ALL WIRING TO BE #12, UNLESS NOTED.
2. MULTI CONDUCTOR CABLE TO BE XHHW-2 WITH CPE JACKET.

LEGEND:
◇ INDICATES TERMINAL POINT

DATE	DRAWN BY	NO.	APPROVED BY	REVISION DESCRIPTION
06-20	SMW	1	PDK	CONFORMING TO CONSTRUCTION RECORDS
10-19	SMW	0	PDK	FOR CONSTRUCTION

BLACK HILLS ENERGY
WEST RAPID CITY SUBSTATION
CONTROL SCHEMATIC
CB 6WR10 TRIP #1/CLOSE/MOTOR

DRAWN BY SMW DATE 1-19
APPROVED BY PDK DATE 1-19
DWG NO. WRC-E-128A REVISION NO. 1

DGR ENGINEERING
ROCK RAPIDS, IOWA
(712) 472-2531

P:\04023\00\DWG\RECORD\WRC\CAD\WRC-E-128A.DWG

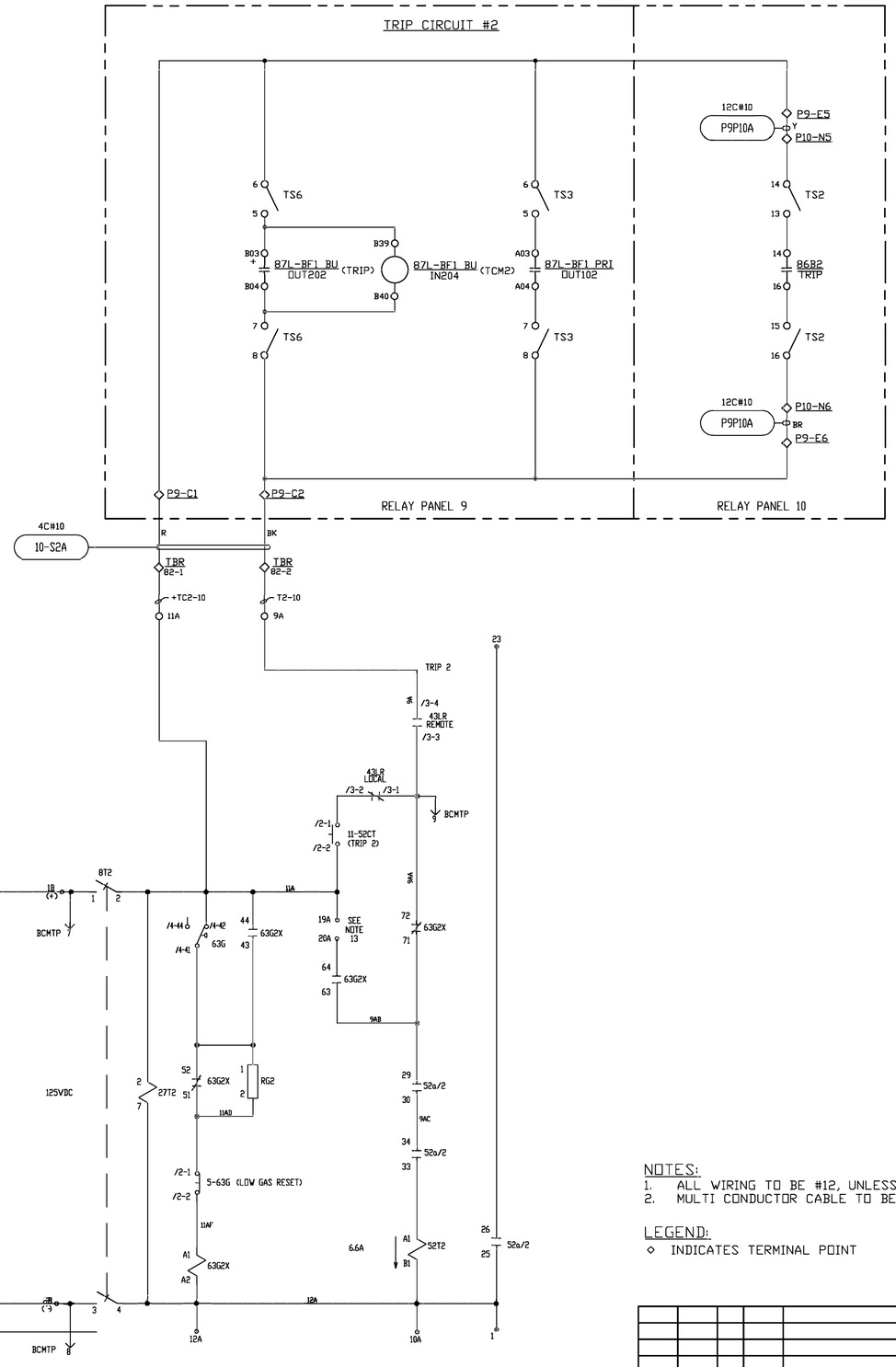

NOTES:
1. ALL WIRING TO BE #12, UNLESS NOTED.
2. MULTI CONDUCTOR CABLE TO BE XHHW-2 WITH CPE JACKET.

LEGEND:
◇ INDICATES TERMINAL POINT

DATE	DRAWN BY	NO.	APPROVED BY	REVISION DESCRIPTION
06-20	SMW	1	PDK	CONFORMING TO CONSTRUCTION RECORDS
10-19	SMW	0	PDK	FOR CONSTRUCTION

BLACK HILLS ENERGY

WEST RAPID CITY SUBSTATION
CONTROL SCHEMATIC
CB 6WR10 TRIP #2

DRAWN BY SMW DATE 1-19
APPROVED BY PDK DATE 1-19

DWG NO. WRC-E-128B REVISION 1

DGR ENGINEERING
ROCK RAPIDS, IOWA
(712) 472-2531

P:\04023\00\DWG\RECORD\WRC\CAD\WRC-E-128B.DWG

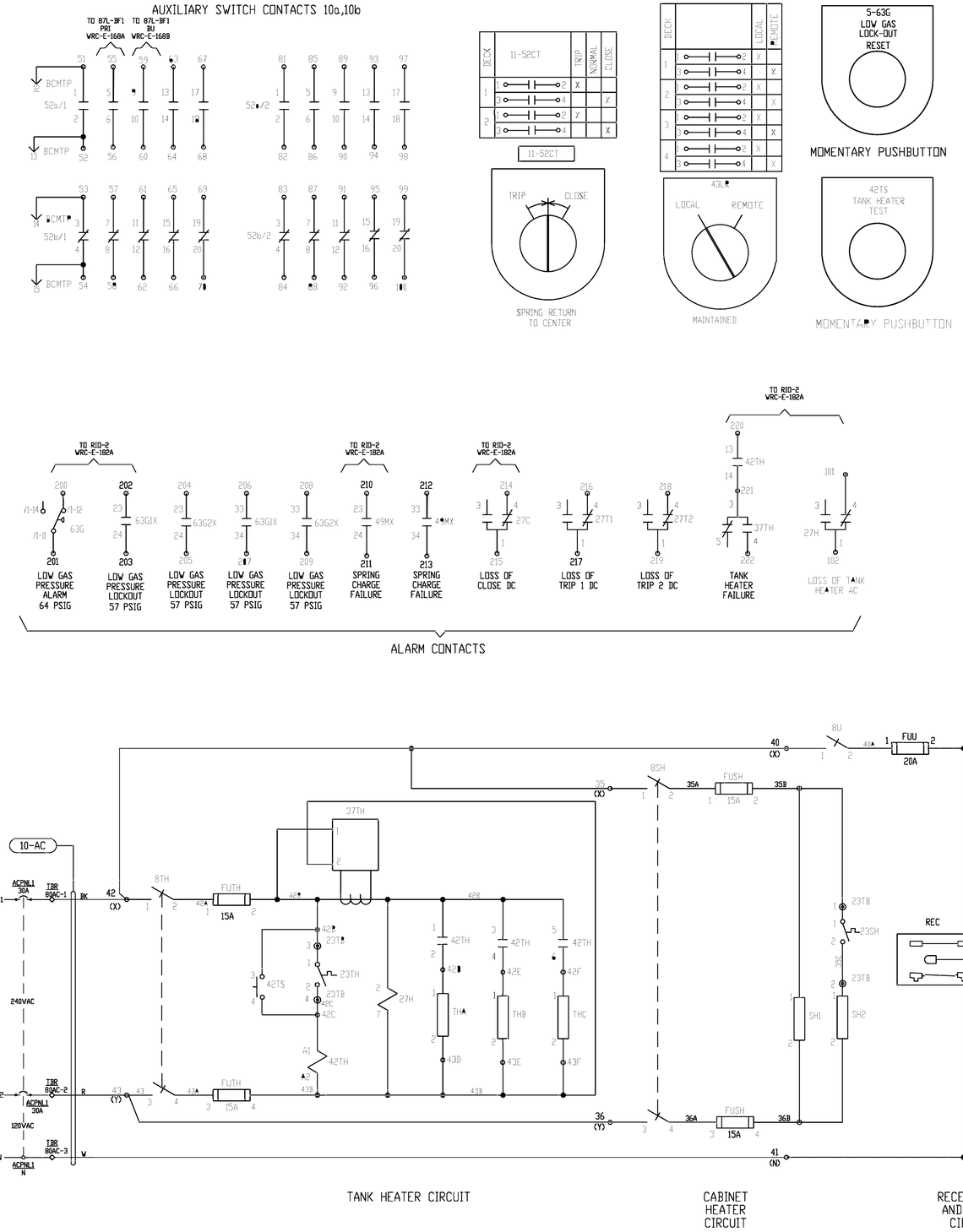

NOTES

1. CLOSING SPRING IS DISCHARGED.
2. AUXILIARY SWITCHES ARE SHOWN WITH BREAKER IN OPEN POSITION.
3. RELAY CONTACTS ARE SHOWN DE-ENERGIZED.
4. PRESSURE SWITCHES ARE SHOWN WITH LOW SF6 PRESSURE.
5. KNIFE SWITCHES ARE SHOWN OPEN.
6. AMBIENT TEMPERATURE ABOVE -5°C/23°F
7. —| |— NORMALLY OPEN CONTACT
   —|/|— NORMALLY CLOSED CONTACT
   (TDC)
   —| |— TIME DELAY NORMALLY OPEN CONTACT
   —o o— CLOSED CONTACT OF PRESSURE SWITCH
   —o/ o— CLOSED CONTACT OF LIMIT SWITCH
   —o/ o— NORMALLY OPEN CONTACT WITH HAND RESET
8. WIRE SPECIFICATION
   CABINET HEATER LEAD WIRES - 600V SFF-2 12 AWG (WHITE)
   TANK HEATER LEAD WIRES - 600V TEFLON 12 AWG (WHITE OR BLACK)
   GROUNDING CIRCUITS - 600V 12 AWG SIS (GREEN)
   GFR CIRCUIT - 600V 12 AWG SIS (GRAY)
   ALL OTHER CIRCUITS - 600V 14 AWG SIS (GRAY)
9. CONTROL TERMINAL BLOCKS DESIGNATED BY (o—→
   TYPE AND RATING: GE EB25B12
   TERMINAL SCREW: 10-32 WASHER HEAD
   CAPABLE OF CONNECTION UP TO 10 AWG
   TERMINAL BLOCKS DESIGNATED BY (◎—→
   TYPE AND RATING: MARATHON KULKA 672 GP 06
10. WIRE TERMINATIONS: NON-INSULATED RING TONGUE, COMPRESSION TYPE.
11. WIRE NUMBER IS THE SAME AS THE TERMINAL POINT NUMBER UNLESS OTHERWISE IDENTIFIED.
12. ADDING JUMPERS BETWEEN POINTS TB1A-19 & 20 AND TB1A-19A & 20A ALLOW BREAKER TO TRIP FOR LOW SF6 GAS PRESSURE. BREAKERS SHIPPED WITH JUMPERS REOMVED.
13. TO RESET 49MX OPEN 8C.
14. TO RESET 49M PRESS THE RESET BUTTON ON 49M.
15. 10% SPARE TERMINALS WILL BE PROVIDED.
16. DEVICE 37TH SETTINGS:
    ΔT - 6 SECONDS

    OVER CURRENT - 15 AMPS FAULT

    UNDER CURRENT - SET BY DISCONNECTING A SINGLE FAULT TANK HEATER AND ADJUSTING DIAL UNTIL ALARM ACTUATES.

    NOTE: RUN WIRE THROUGH SENSING LOOP 2 TIMES.
17. TIMER SETTINGS: BLACK IS THE SWITCH

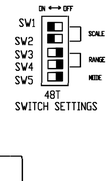

DEVICE	DESCRIPTION	MEPPI #	MANUFACTURER MANF. #	
5-63G	5-63G LOW GAS RESET PUSHBUTTON 2 DECKS		SQUARE-D 9001-KR1BH8Y238	V
8C,8M,8T1,8SH,8TH	2 POLE, KNIFE SWITCH, 30A, 600V FRONT CONNECTED	M00082	STATES COMPANY 202-B	V
8CL	CABINET LIGHT SWITCH	M02248	HONEYWELL BA-2R01-AC	M
8T2	2 POLE, KNIFE SWITCH, 30A, 600V FRONT CONNECTED		STATES COMPANY 202-B	
8U	SINGLE POLE, KNIFE SWITCH, 30A, 600V FRONT CONNECTED	M00342	STATES COMPANY 201-A	V
11-52CT	MANUAL CLOSE/TRIP CONTROL SWITCH		SQUARE D 9001-KS53BH2Y238	V
23TH	THERMOSTAT, TANK HEATER CLOSES @ -15°C, RESETS @ -10°C		ELWOOD 3100U-0203-0006	V
23SH	THERMOSTAT ASSY, CABINET HEATERS CLOSES @ -11°C, RESETS @ 10°C	M00011	GE WR50X50 W/WR00X501 THERM	V
23TB	6 PT, 600V, 30A, 10AWG TERMINAL BLOCK		MARATHON 672 GP 06	V
27C,27T1,27T2	125VDC DPDT RELAY LOSS OF VOLTAGE	M01990	SQUARE D 8501KPDR12V63	V
27H	240VAC AUX RELAY	M01992	SQUARE D 8501KPR12V24	V
33HB1	MECHANISM LIMIT SWITCH CHARGED OPEN SPST	M00353	OMRON X-10GM2-B	M
37TH	CURRENT SENSING RELAY		ABB ECSW6MBHT	V
42M	AUX CONTACT ADDER DECK 1A, 1B	M02166	MITSUBISHI UT-AX2BC1A1	V
42M	CONNECTION FOR THRM-OVRLD TO CONTACTOR	M03035	MITSUBISHI UN-THP1	V
42M	MOTOR CONTACTOR, 21A, 125VDC	M03059	MITSUBISHI SD-T21BCDC125V2A2B	V
42TH	200-240VAC CONTACTOR 20A	M01982	MITSUBISHI S-T12(BC)AC200V1A1B	V
42TS	11-52C, 11-52T PUSH BUTTON SWITCH	M00347	SQUARE-D 9001-KR1BH5Y22	V
43LR	LOCAL/REMOTE SELECTOR SWITCH (4 DECKS)		SQUARE D 9001-KS11BH4Y238	V
48T	RELAY, 12-240VDC, 20-240VAC COIL	M03009	ICS CONTROLS ETR-P22KCI-30H-22MV1	V
49M	THERMAL OVERLOAD (4-6) SET @ 5.0A	M03060	MITSUBISHI TH-T25(BC)KP5A	V
63G1X,49MX,52Y,63G2X	48VDC CONTROL RELAY	M02163	MITSUBISHI SRD-T5BCDC48V3A2B	V
63G1X, 49MX, 63G2X, 42M	AUX CONTACT ADDER DECK 1A, 1B	M02166	MITSUBISHI UT-AX2BC1A1	V
52a/1, 52a/2 52a/1.52a/2	AUXILIARY SWITCH, 20a-20b, BM-1	MD100505G01	MITSUBISHI MD100505G01	M
52C	COIL, CLOSE, 125VDC FOR BM-1	M00642	MEPPI M00642	M
52T1,52T2	COIL, DOUBLE TRIP, 125 VDC, BM1	M00647	MEPPI M00647	M
63G	4 POLE GAS SWITCH 64-57 PSIG, -5°C	MD100378H2	TRAFAG 43125	M
88M	125 VDC BM1 200W 30W 120VAC/125VDC	M00367	MEPPI M00367	M
BCMTP	17 POSITION CONNECTOR MALE RECEPTACLE W/FLANGE	M02227	AMP 172516-1	V
CL	LED,BULB,800LUMENS,60W EQUIVMED BASE, A19,120V,85-99W LAMP HOLDER, CLEAR SOCKET	M01962	LEGRAND S752WCC10	V
FUSH, FUTH, FU1, FU2	15A, 250V, 2 POLE FUSE		BUSSMANN RM25030-2SR W/FRN-R-15	V
FUU	20A, 250V, 1 POLE FUSE		BUSSMANN RM25030-1SR W/FRN-R-20	V
REC	RECEPTACLE,NON-GFR,20A,125VAC,5-20R	M00944	LEVITON 16352	V
RY,RG1,RMX,RG2	25W 1k OHM	M00106	OHMITE L25J1K	V
SH1,SH2	CABINET HEATER 240VAC, 250W	M00724	HEATREX 565084	M
THA, THB, THC	TANK HEATER, 240VAC, 800W, 40E	MD100180H06	WATLOW SR2560-1	M

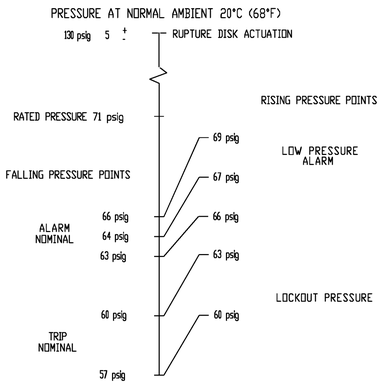

DEVICE	FUNCTION
27C	LOSS OF CLOSE DC
27T1	LOSS OF TRIP 1 DC
27T2	LOSS OF TRIP 2 DC
42TH	TANK HEATER CONTACTOR
48T	TIME LIMIT RELAY FOR 42M
49MX	AUXILIARY RELAY FOR 49M
52Y	ANTI PUMPING RELAY
63G1X	AUXILIARY RELAY FOR 63G1
63G2X	AUXILIARY RELAY FOR 63G2

OPERATING CHARACTERISTICS			
DEVICE	NOMINAL VOLTAGE	CURRENT	OPERATING VOLTAGE RANGE
52C	125VDC	3.8 A	90-140 VDC
52T1,52T2	125VDC	6.6 A	70-140 VDC
88M	125VDC	START 25 A RUN 6 A	90-140 VDC

THIS DRAWING WAS CREATED FROM MEPPI DRAWING MD401932, REV. G

P:\04023\00\DWG\RECORD\WRC\CAD\WRC-E-128C.DWG

DGR ENGINEERING
ROCK RAPIDS, IOWA
(712) 472-2531

DATE	DRAWN BY	NO.	APPROVED BY	REVISION DESCRIPTION
06-20	SMW	1	PDK	CONFORMING TO CONSTRUCTION RECORDS
10-19	SMW	0	PDK	FOR CONSTRUCTION

BLACK HILLS ENERGY

WEST RAPID CITY SUBSTATION

AUXILIARY SCHEMATIC
CB 6WR10

DRAWN BY SMW DATE 1-19
APPROVED BY PDK DATE 1-19
DWG NO. WRC-E-128C REVISION 1

SEL-9510

101-6WR13		
I/O	FUNCTION	DRAWING REFERENCE
01 + — 02 CLOSE	MANUAL CLOSE 6WR13	THIS DRAWING
03 — 04 CLOSE		
05 — 06 CLOSED	6WR13 CLOSE IND	THIS DRAWING
08 — 09 OPEN	6WR13 OPEN IND	THIS DRAWING
10 — 11 TRIP		
12 + — 13 TRIP	MANUAL TRIP 6WR13	THIS DRAWING

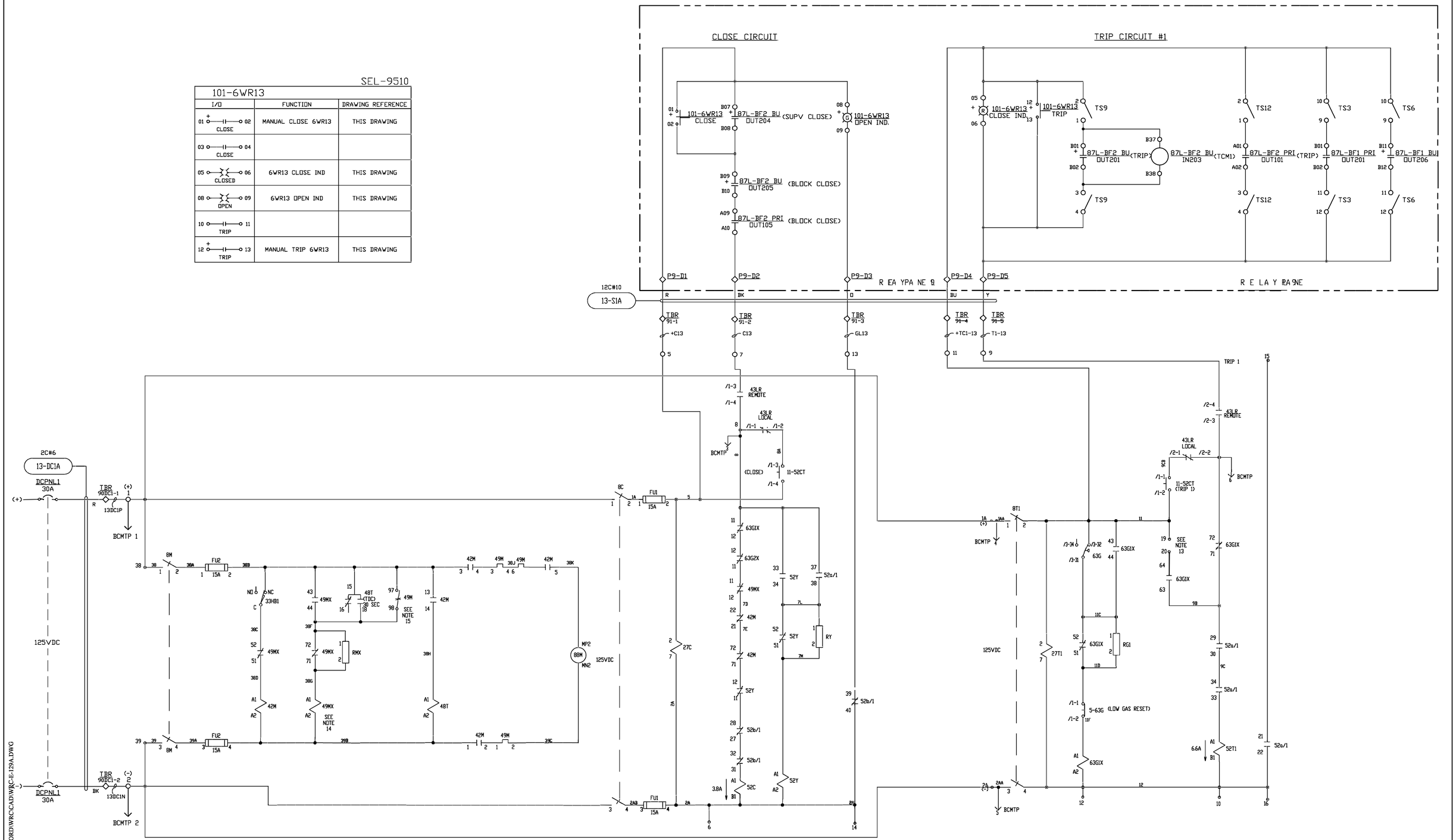

NOTES:
1. ALL WIRING TO BE #12, UNLESS NOTED.
2. MULTI CONDUCTOR CABLE TO BE XHHW-2 WITH CPE JACKET.

LEGEND:
◇ INDICATES TERMINAL POINT

P:\04023\00\DWG\RECORD\WRC\CAD\WRC-E-129A.DWG

DGR ENGINEERING
ROCK RAPIDS, IOWA
(712) 472-2531

DATE	DRAWN BY	NO.	APPROVED BY	REVISION DESCRIPTION
06-20	SMW	1	PJK	CONFORMING TO CONSTRUCTION RECORDS
10-19	SMW	0	PJK	FOR CONSTRUCTION

BLACK HILLS ENERGY

WEST RAPID CITY SUBSTATION
CONTROL SCHEMATIC
CB 6WR13 TRIP #1/CLOSE/MOTOR

DRAWN BY SMW DATE 1-19
APPROVED BY PJK DATE 1-19
DWG NO. WRC-E-129A REVISION NO. 1

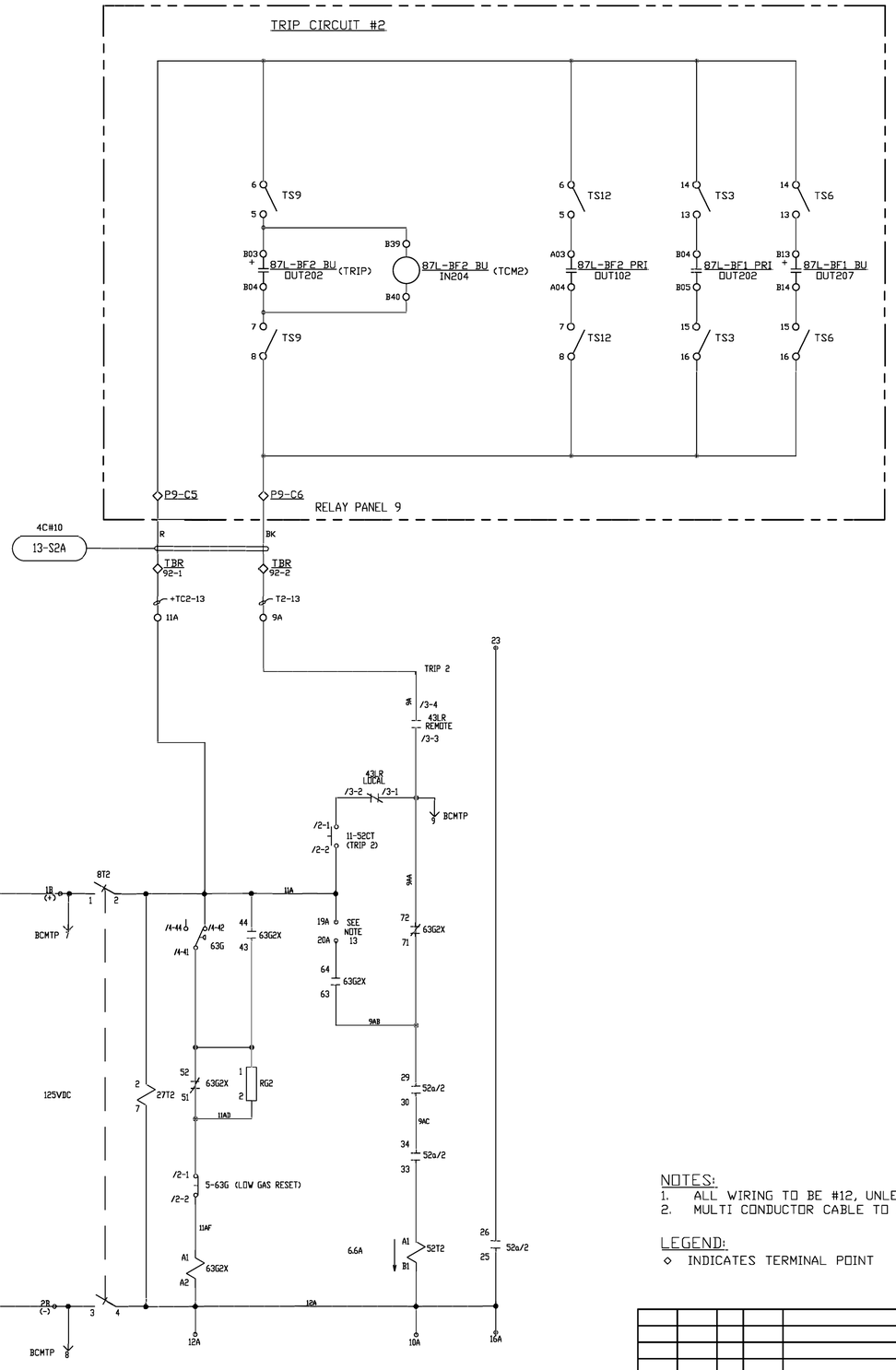

NOTES:
1. ALL WIRING TO BE #12, UNLESS NOTED.
2. MULTI CONDUCTOR CABLE TO BE XHHW-2 WITH CPE JACKET.

LEGEND:
◇ INDICATES TERMINAL POINT

DATE	DRAWN BY	NO.	APPROVED BY	REVISION DESCRIPTION
06-20	SMW	1	PDK	CONFORMING TO CONSTRUCTION RECORDS
10-19	SMW	0	PDK	FOR CONSTRUCTION

BLACK HILLS ENERGY

WEST RAPID CITY SUBSTATION
CONTROL SCHEMATIC
CB 6WR13 TRIP #2

DRAWN BY SMW DATE 1-19
APPROVED BY PDK DATE 1-19

DWG NO. WRC-E-129B REVISION 1

DGR ENGINEERING
ROCK RAPIDS, IOWA
(712) 472-2531

P:\04023\00\DWG\RECORD\WRC\CAD\WRC-E-129B.DWG

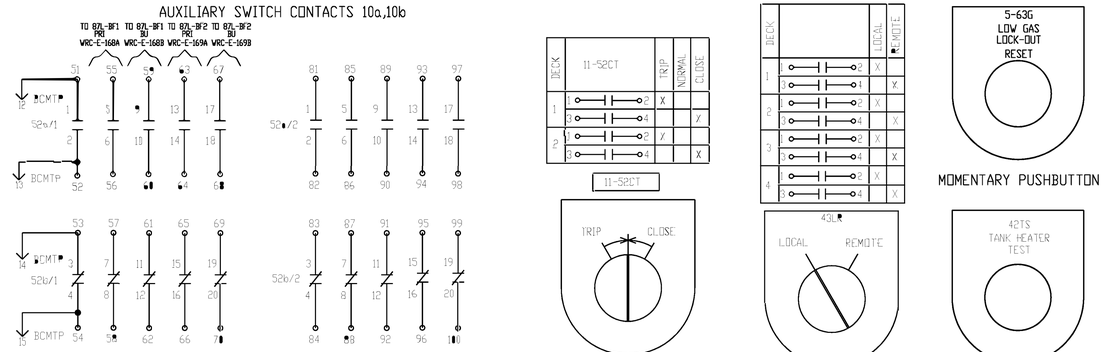

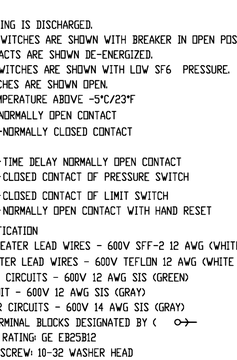

NOTES

1. CLOSING SPRING IS DISCHARGED.
2. AUXILIARY SWITCHES ARE SHOWN WITH BREAKER IN OPEN POSITION.
3. RELAY CONTACTS ARE SHOWN DE-ENERGIZED.
4. PRESSURE SWITCHES ARE SHOWN WITH LOW SF6 PRESSURE.
5. KNIFE SWITCHES ARE SHOWN OPEN.
6. AMBIENT TEMPERATURE ABOVE -5°C/23°F
7. —| |— NORMALLY OPEN CONTACT
   —|/|— NORMALLY CLOSED CONTACT
   (TDC)
   —| |— TIME DELAY NORMALLY OPEN CONTACT
   —o o— CLOSED CONTACT OF PRESSURE SWITCH
   —o/ o— CLOSED CONTACT OF LIMIT SWITCH
   —o/ o— NORMALLY OPEN CONTACT WITH HAND RESET
8. WIRE SPECIFICATION
   CABINET HEATER LEAD WIRES - 600V SFF-2 12 AWG (WHITE)
   TANK HEATER LEAD WIRES - 600V TEFLON 12 AWG (WHITE OR BLACK)
   GROUNDING CIRCUITS - 600V 12 AWG SIS (GREEN)
   GFR CIRCUIT - 600V 12 AWG SIS (GRAY)
   ALL OTHER CIRCUITS - 600V 14 AWG SIS (GRAY)
9. CONTROL TERMINAL BLOCKS DESIGNATED BY (o—→
   TYPE AND RATING: GE EB25B12
   TERMINAL SCREW: 10-32 WASHER HEAD
   CAPABLE OF CONNECTION UP TO 10 AWG
   TERMINAL BLOCKS DESIGNATED BY (◎—→
   TYPE AND RATING: MARATHON KULKA 672 GP 06
10. WIRE TERMINATIONS: NON-INSULATED RING TONGUE, COMPRESSION TYPE.
11. WIRE NUMBER IS THE SAME AS THE TERMINAL POINT NUMBER UNLESS OTHERWISE IDENTIFIED.
12. ADDING JUMPERS BETWEEN POINTS TB1A-19 & 20 AND TB1A-19A & 20A ALLOW BREAKER TO TRIP FOR LOW SF6 GAS PRESSURE. BREAKERS SHIPPED WITH JUMPERS REMOVED.
13. TO RESET 49MX OPEN 8C.
14. TO RESET 49M PRESS THE RESET BUTTON ON 49M.
15. 10% SPARE TERMINALS WILL BE PROVIDED.
16. DEVICE 37TH SETTINGS:
    ΔT - 6 SECONDS

    OVER CURRENT - 15 AMPS FAULT

    UNDER CURRENT - SET BY DISCONNECTING A SINGLE FAULT TANK HEATER AND ADJUSTING DIAL UNTIL ALARM ACTUATES.

    NOTE: RUN WIRE THROUGH SENSING LOOP 2 TIMES.
17. TIMER SETTINGS: BLACK IS THE SWITCH

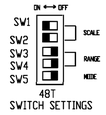

DEVICE	DESCRIPTION	MEPPI #	MANUFACTURER PART #	
5-63G	5-63G LOW GAS RESET PUSHBUTTON 2 DECKS		SQUARE-D 9001-KR1BH8Y238	V
8C,8M,8T1,8SH,8TH	2 POLE, KNIFE SWITCH, 30A, 600V FRONT CONNECTED	M00432	STATES COMPANY 202-B	V
8CL	CABINET LIGHT SWITCH	M02248	HONEYWELL BA-2K01-A2	M
8T2	2 POLE, KNIFE SWITCH, 30A, 600V FRONT CONNECTED		STATES COMPANY 202-B	V
8U	SINGLE POLE, KNIFE SWITCH, 30A, 600V PRINT CONNECTED	M00342	STATES COMPANY 201-A	V
11-52CT	MANUAL CLOSE/TRIP CONTROL SWITCH		SQUARE D 9001-KS53BH2Y238	V
23TH	THERMOSTAT, TANK HEATER CLOSES @ -15°C, RESETS @ -10°C		KLIXWOOD 3100U-02D3-0006	V
23SH	THERMOSTAT ASSY, CABINET HEATERS CLOSES @ -11°C, RESETS @ 10°C	M00411	GE WR50X50 W/WR00X501 THERM	V
23TB	6 PT, 600V, 30A, 10AWG TERMINAL BLOCK		MARATHON 672 GP 06	V
27C,27T1,27T2	125VDC DPDT RELAY LOSS OF VOLTAGE	M01990	SQUARE D 8501KPDR12V63	V
27H	240VAC AUX RELAY	M01992	SQUARE D 8501KPR12V24	V
33HB1	MECHANISM LIMIT SWITCH CHARGED OPEN SPST	M00353	OMRON X-10GM2-B	M
37TH	CURRENT SENSING RELAY		ABB ECSW6MBHT	V
42M	AUX CONTACT ADDER DECK 1A, 1B	M02166	MITSUBISHI UT-AX2DC1A1B	V
42M	CONNECTION FOR THRM-OVRLD TO CONTACTOR	M03035	MITSUBISHI UN-TH21	V
42M	MOTOR CONTACTOR, 21A, 125VDC	M03058	MITSUBISHI SD-T21BCDC125V2A2B	V
42TH	200-240VAC CONTACTOR 20A	M01982	MITSUBISHI S-T12(BC)AC200V1A1B	V
42TS	11-52C, 11-52T PUSH BUTTON SWITCH	M00347	SQUARE-D 9001-KR1BH5Y22	V
43LR	LOCAL/REMOTE SELECTOR SWITCH (4 DECKS)		SQUARE D 9001-KS11BH4Y238	V
48T	RELAY, 12-240VDC, 20-240VAC COIL	M03009	C3 CONTROLS ETR-P22KCI-30M-2CMV1	V
49M	THERMAL OVERLOAD (4-6) SET @ 5.0A	M03060	MITSUBISHI TH-T25(BC)KP5A	V
63G1X,49MX,52Y,63G2X	48VDC CONTROL RELAY	M02163	MITSUBISHI SRD-T5BCDC48V3A2B	V
63G1X, 49MX, 63G2X, 42M	AUX CONTACT ADDER DECK 1A, 1B	M02166	MITSUBISHI UT-AX2DC1A1B	V
52a/1, 52a/2 52a/1,52b/2	AUXILIARY SWITCH, 20a-20b, BM-1	MD100505G01	MITSUBISHI MD100505G01	M
52C	COIL, CLOSE, 125VDC FOR BM-1	M00642	MEPPI M00642	M
52T1,52T2	COIL, DOUBLE TRIP, 125 VDC, BM1	M00647	MEPPI M00647	M
63G	4 POLE GAS SWITCH 64-57 PSIG, -5°C	MD100378H02	TRAFAG 43125	M
88M	125 VDC MOTOR 300W 300W 120VAC/125VDC	M00367	MEPPI M00367	M
BCMTP	17 POSITION CONNECTOR MALE RECEPTACLE W/FLANGE	M02227	AMP 172516-1	V
CL	LED BULB 800LUMENS,60W EQUIV,MED BASE, A19,120V,85-99W			V
FUSH, FUTH, FU1, FU2	LAMP HOLDER, CLEAR SOCKET 15A, 250V, 2 POLE FUSE	M01962	LEGRAND S7S2WCC10 BUSSMANN RM25030-2SR W/FRN-R-15	V V
FUU	20A, 250V, 1 POLE FUSE		BUSSMANN RM25030-1SR W/FRN-R-20	V
REC	RECEPTACLE,NON-GFCI,15A,125VAC,5-20R	M00944	LEVITON 16352	V
RY,RG1,RMX,RG2	25W 1k OHM	M00106	OHMITE L25J1K0	V
SH1,SH2	CABINET HEATER 240VAC, 250W	M00724	HEATREX 565084	M
THA, THB, THC	TANK HEATER, 240VAC, 800W, 40E	MD100880H06	WATLOW SR2560-1	M

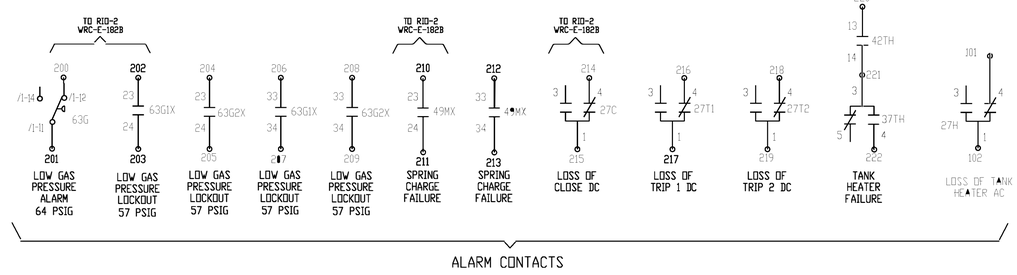

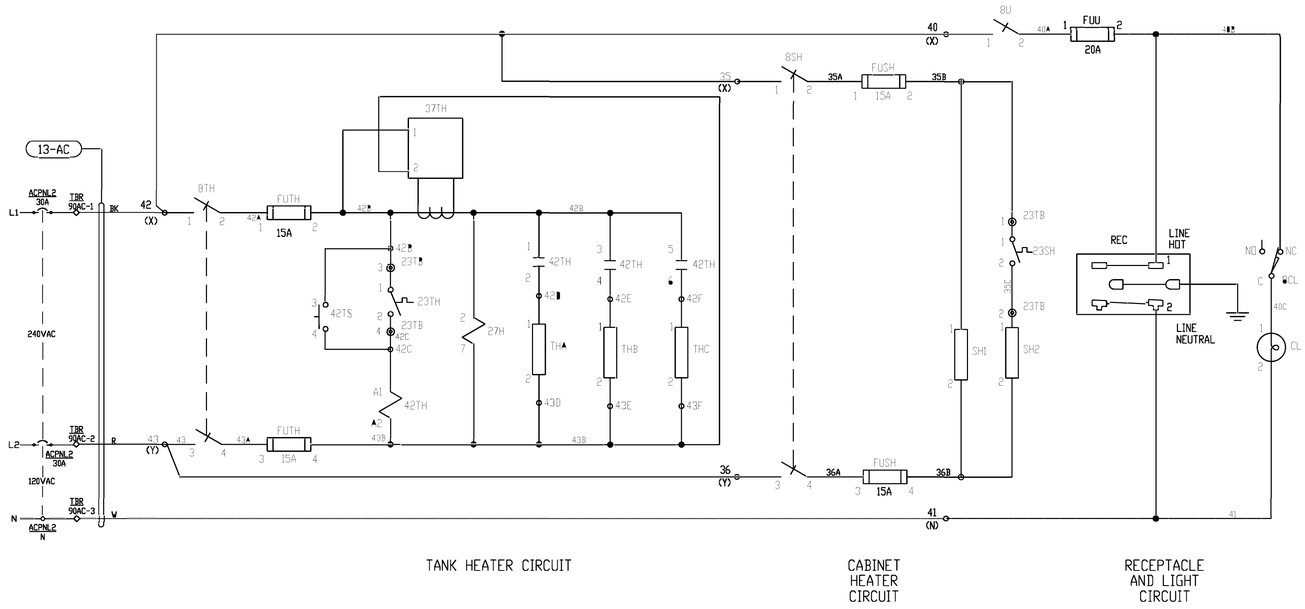

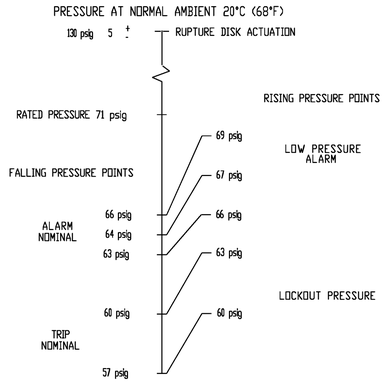

DEVICE	FUNCTION
27C	LOSS OF CLOSE DC
27T1	LOSS OF TRIP 1 DC
27T2	LOSS OF TRIP 2 DC
42TH	TANK HEATER CONTACTOR
48T	TIME LIMIT RELAY FOR 42M
49MX	AUXILIARY RELAY FOR 49M
52Y	ANTI PUMPING RELAY
63G1X	AUXILIARY RELAY FOR 63G1
63G2X	AUXILIARY RELAY FOR 63G2

OPERATING CHARACTERISTICS			
DEVICE	NOMINAL VOLTAGE	CURRENT	OPERATING VOLTAGE RANGE
52C	125VDC	3.8 A	90-140 VDC
52T1,52T2	125VDC	6.6 A	70-140 VDC
88M	125VDC	START 25 A RUN 6 A	90-140 VDC

THIS DRAWING WAS CREATED FROM MEPPI DRAWING MD401932, REV. G

P:\0402330\DWG\RECORD\WRC\CAD\WRC-E-129C.DWG

DGR ENGINEERING
ROCK RAPIDS, IOWA
(712) 472-2531

DATE	DRAWN BY	NO.	APPROVED BY	REVISION DESCRIPTION
06-20	SMW	1	PDK	CONFORMING TO CONSTRUCTION RECORDS
10-19	SMW	0	PDK	FOR CONSTRUCTION

BLACK HILLS ENERGY
WEST RAPID CITY SUBSTATION
AUXILIARY SCHEMATIC
CB 6WR13

DRAWN BY SMW DATE 1-19 | DWG NO. WRC-E-129C | REVISION 1
APPROVED BY PDK DATE 1-19 | SHEET 1

SEL-9510

101-6WR16		
I/O	FUNCTION	DRAWING REFERENCE
01 + — 02 CLOSE	MANUAL CLOSE 6WR16	THIS DRAWING
03 — 04 CLOSE		
05 — 06 CLOSED	6WR16 CLOSE IND	THIS DRAWING
08 — 09 OPEN	6WR16 OPEN IND	THIS DRAWING
10 — 11 TRIP		
12 + — 13 TRIP	MANUAL TRIP 6WR16	THIS DRAWING

CLOSE CIRCUIT

TRIP CIRCUIT #1

RELAY PANEL 5

RELAY PANEL 5

RELAY PANEL 4

RELAY PANEL 9

125VDC

BCMTP 1

BCMTP 2

NOTES:
1. ALL WIRING TO BE #12, UNLESS NOTED.
2. MULTI CONDUCTOR CABLE TO BE XHHW-2 WITH CPE JACKET.

LEGEND:
◇ INDICATES TERMINAL POINT

DGR ENGINEERING
ROCK RAPIDS, IOWA
(712) 472-2531

DATE	DRAWN BY	NO.	APPROVED BY	REVISION DESCRIPTION
06-20	SMW	1	PJK	CONFORMING TO CONSTRUCTION RECORDS
10-19	SMW	0	PJK	FOR CONSTRUCTION

BLACK HILLS ENERGY

WEST RAPID CITY SUBSTATION
CONTROL SCHEMATIC
CB 6WR16 TRIP #1/CLOSE/MOTOR

DRAWN BY SMW DATE 1-19
APPROVED BY PJK DATE 1-19

DWG NO. WRC-E-130A REVISION NO. 1

P:\04023\00\DWG\RECORD\WRCCAD\WRC-E-130A.DWG

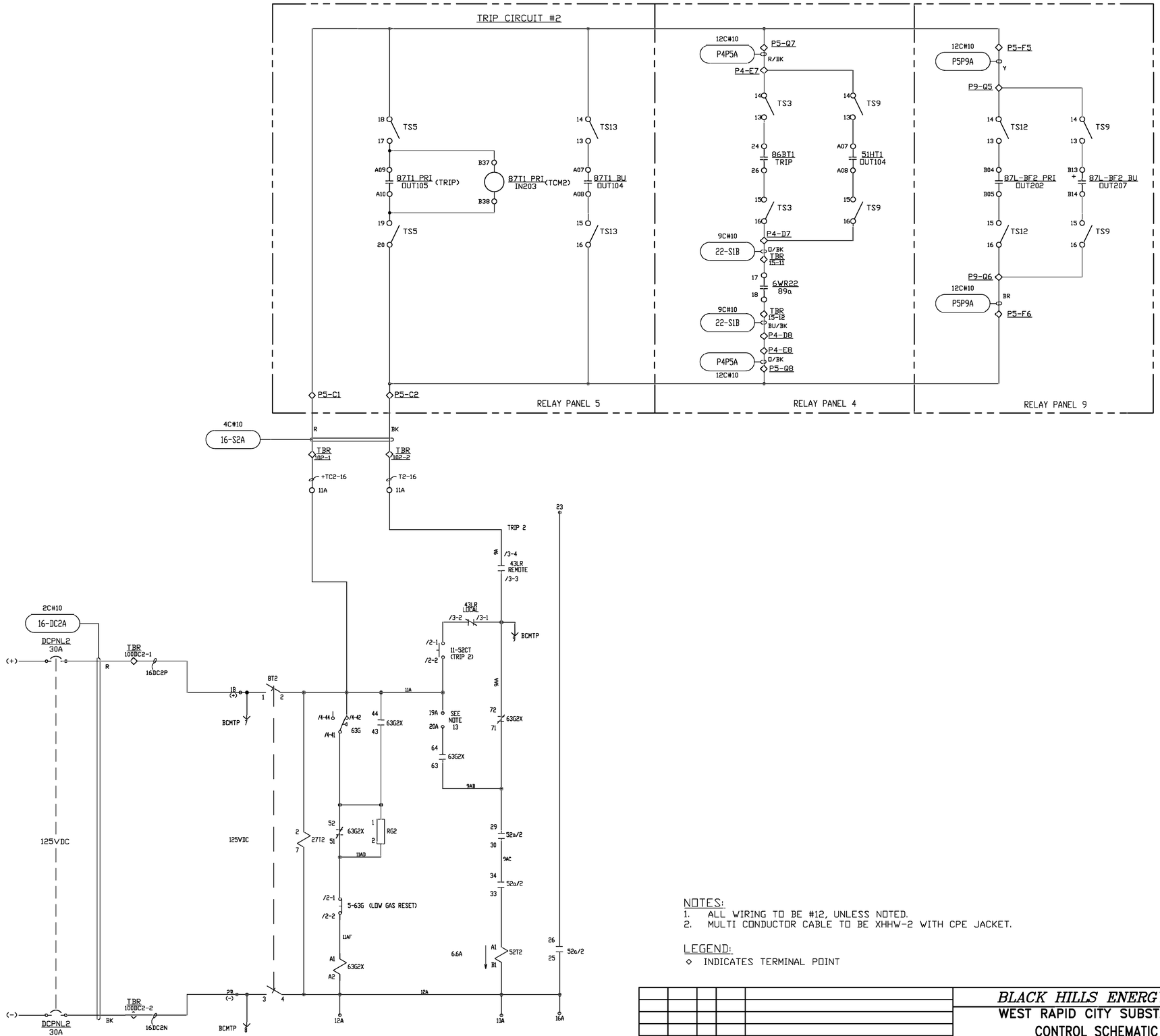

NOTES:
1. ALL WIRING TO BE #12, UNLESS NOTED.
2. MULTI CONDUCTOR CABLE TO BE XHHW-2 WITH CPE JACKET.

LEGEND:
◇ INDICATES TERMINAL POINT

DATE	DRAWN BY	NO.	APPROVED BY	REVISION DESCRIPTION
06-20	SMW	1	PDK	CONFORMING TO CONSTRUCTION RECORDS
10-19	SMW	0	PDK	FOR CONSTR UC REQ

BLACK HILLS ENERGY

WEST RAPID CITY SUBSTATION
CONTROL SCHEMATIC
CB 6WR16 TRIP #2

DRAWN BY SMW DATE 1-19
APPROVED BY PDK DATE 1-19

DWG NO. WRC-E-130B REVISION 1

P:\04023\00\DWG\RECORD\WRCCAD\WRC-E-130B.DWG

DGR ENGINEERING
ROCK RAPIDS, IOWA
(712) 472-2531

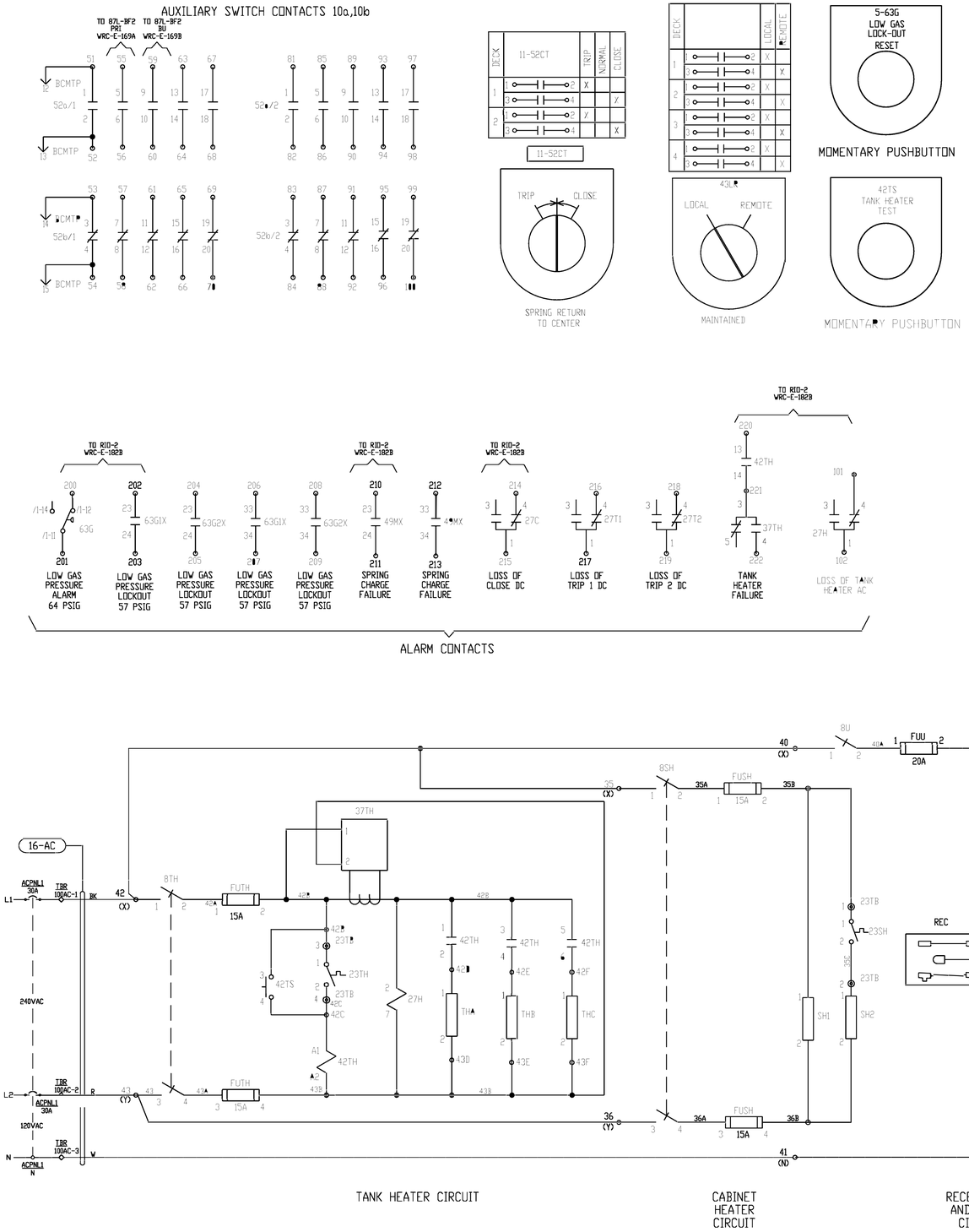

NOTES

1. CLOSING SPRING IS DISCHARGED.
2. AUXILIARY SWITCHES ARE SHOWN WITH BREAKER IN OPEN POSITION.
3. RELAY CONTACTS ARE SHOWN DE-ENERGIZED.
4. PRESSURE SWITCHES ARE SHOWN WITH LOW SF6 PRESSURE.
5. KNIFE SWITCHES ARE SHOWN OPEN.
6. AMBIENT TEMPERATURE ABOVE -5°C/23°F
7. —| |— NORMALLY OPEN CONTACT
   —|/|— NORMALLY CLOSED CONTACT
   (TDC)
   —| |— TIME DELAY NORMALLY OPEN CONTACT
   —o o— CLOSED CONTACT OF PRESSURE SWITCH
   —o o— CLOSED CONTACT OF LIMIT SWITCH
   —o o— NORMALLY OPEN CONTACT WITH HAND RESET
8. WIRE SPECIFICATION
   CABINET HEATER LEAD WIRES - 600V SFF-2 12 AWG (WHITE)
   TANK HEATER LEAD WIRES - 600V TEFLON 12 AWG (WHITE OR BLACK)
   GROUNDING CIRCUITS - 600V 12 AWG SIS (GREEN)
   GFR CIRCUIT - 600V 12 AWG SIS (GRAY)
   ALL OTHER CIRCUITS - 600V 14 AWG SIS (GRAY)
9. CONTROL TERMINAL BLOCKS DESIGNATED BY (o—→
   TYPE AND RATING: GE EB25B12
   TERMINAL SCREW: 10-32 WASHER HEAD
   CAPABLE OF CONNECTION UP TO 10 AWG
   TERMINAL BLOCKS DESIGNATED BY (◎—→
   TYPE AND RATING: MARATHON KULKA 672 GP 06
10. WIRE TERMINATIONS: NON-INSULATED RING TONGUE, COMPRESSION TYPE.
11. WIRE NUMBER IS THE SAME AS THE TERMINAL POINT NUMBER UNLESS OTHERWISE IDENTIFIED.
12. ADDING JUMPERS BETWEEN POINTS TB1A-19 & 20 AND TB1A-19A & 20A ALLOW BREAKER TO TRIP FOR LOW SF6 GAS PRESSURE. BREAKERS SHIPPED WITH JUMPERS REOMVED.
13. TO RESET 49MX OPEN 8C.
14. TO RESET 49M PRESS THE RESET BUTTON ON 49M.
15. 10% SPARE TERMINALS WILL BE PROVIDED.
16. DEVICE 37TH SETTINGS:
    ΔT - 6 SECONDS

    OVER CURRENT - 15 AMPS FAULT

    UNDER CURRENT - SET BY DISCONNECTING A SINGLE FAULT TANK HEATER AND ADJUSTING DIAL UNTIL ALARM ACTUATES.

    NOTE: RUN WIRE THROUGH SENSING LOOP 2 TIMES.
17. TIMER SETTINGS: BLACK IS THE SWITCH

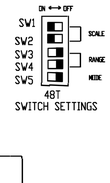

DEVICE	DESCRIPTION	MEPPI #	MANUFACTURER MANF. #	
5-63G	5-63G LOW GAS RESET PUSHBUTTON 2 DECKS		SQUARE-D 9001-KR1BH8Y238	V
8C,8M,8T1,8SH,8TH	2 POLE, KNIFE SWITCH, 30A, 600V FRONT CONNECTED	M00102	STATES COMPANY 202-B	V
8CL	CABINET LIGHT SWITCH	M00248	HONEYWELL BA-2R01-AC	M
8T2	2 POLE, KNIFE SWITCH, 30A, 600V FRONT CONNECTED		STATES COMPANY 202-B	
8U	SINGLE POLE, KNIFE SWITCH, 30A, 600V FRONT CONNECTED	M00342	STATES COMPANY 201-A	V
11-52CT	MANUAL CLOSE/TRIP CONTROL SWITCH		SQUARE D 9001-KS53BH2Y238	V
23TH	THERMOSTAT, TANK HEATER CLOSES @ -15°C, RESETS @ -10°C		ELWOOD 3100U-0208-0006	V
23SH	THERMOSTAT ASSY, CABINET HEATERS CLOSES @ -11°C, RESETS @ 10°C	M00111	GE WR50X50 W/WR00X501 THERM	V
23TB	6 PT, 600V, 30A, 10AWG TERMINAL BLOCK		MARATHON 672 GP 06	V
27C,27T1,27T2	125VDC DPDT RELAY LOSS OF VOLTAGE	M01990	SQUARE D 8501KPDR12V63	V
27H	240VAC AUX RELAY	M01992	SQUARE D 8501KPR12V24	V
33HB1	MECHANISM LIMIT SWITCH CHARGED OPEN	M00353	OMRON X-10GM2-B	M
37TH	CURRENT SENSING RELAY		ABB ECSW6MBHT	V
42M	AUX CONTACT ADDER DECK 1A, 1B	M02166	MITSUBISHI UT-AX2BC1A1B	V
42M	CONNECTION FOR THERMOVELD TO CONTACTOR	M03035	MITSUBISHI UN-TH21	V
42M	MOTOR CONTACTOR, 21A, 125VDC	M03059	MITSUBISHI SD-T21BCDC125V2A2B	V
42TH	200-240VAC CONTACTOR 20A	M01982	MITSUBISHI S-T12(BC)AC200V1A1B	V
42TS	11-52C, 11-52T PUSH BUTTON SWITCH	M00347	SQUARE-D 9001-KR1BH5Y22	V
43LR	LOCAL/REMOTE SELECTOR SWITCH (4 DECKS)		SQUARE D 9001-KS11BH4Y238	V
48T	RELAY, 12-240VDC, 20-240VAC COIL	M03009	ICS CONTROLS ETR-P22JCJ-30H-2CMV1	V
49M	THERMAL OVERLOAD (4-6) SET @ 5.0A	M03060	MITSUBISHI TH-T25(BC)KP5A	V
63G1X,49MX,52Y,63G2X	48VDC CONTROL RELAY	M02163	MITSUBISHI SRD-T5BCDC48V3A2B	V
63G1X, 49MX, 63G2X, 42M	AUX CONTACT ADDER DECK 1A, 1B	M02166	MITSUBISHI UT-AX2BC1A1B	V
52a/1, 52a/2 52b/1,52b/2	AUXILIARY SWITCH, 20a-20b, BM-1	MD100505G01	MITSUBISHI MD100505G01	M
52C	COIL, CLOSE, 125VDC FOR BM-1	M00642	MEPPI M00642	M
52T1,52T2	COIL, DOUBLE TRIP, 125 VDC, BM1	M00647	MEPPI M00647	M
63G	4 POLE GAS SWITCH 64-57 PSIG, -50C	MD100378H02	TRAFAG 43125	M
88M	125 VDC BM 200W 300W @ 240VAC/125VDC	M00367	MEPPI M00367	M
BCMTP	17 POSITION CONNECTOR MALE RECEPTACLE W/FLANGE	M02227	AMP 172516-1	V
CL	LED BULB,800 LUMENS,60W EQUIVMED BASE, A19,120V,85-99W			V
	LAMP HOLDER, CLEAR SOCKET	M01962	LEGRAND S752WCC10	
FUSH, FUTH, FU1, FU2	15A, 250V, 2 POLE FUSE		BUSSMANN RM25030-2SR W/FRN-R-15	V
FUU	20A, 250V, 1 POLE FUSE		BUSSMANN RM25030-1SR W/FRN-R-20	V
REC	RECEPTACLE,NON-GFR,20A,125VAC,5-20R	M00944	LEVITON 16352	V
RY,RG1,RMX,RG2	25W 1k OHM	M00106	OHMITE L25J1K0	V
SH1,SH2	CABINET HEATER 240VAC, 250W	M00724	HEATREX 565084	M
THA, THB, THC	TANK HEATER, 240VAC, 800W, 40E	MD100380H06	WATLOW SR2560-1	M

PRESSURE AT NORMAL AMBIENT 20°C (68°F)

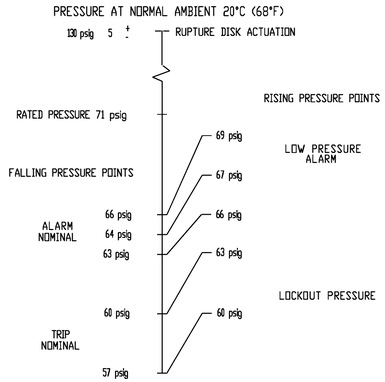

NOTE LOCKOUT WILL ALWAYS OPERATE AT 7 psig BELOW THE ALARM. THERE CANNOT BE A TRIP WITHOUT AN ALARM.

DEVICE	FUNCTION
27C	LOSS OF CLOSE DC
27T1	LOSS OF TRIP 1 DC
27T2	LOSS OF TRIP 2 DC
42TH	TANK HEATER CONTACTOR
48T	TIME LIMIT RELAY FOR 42M
49MX	AUXILIARY RELAY FOR 49M
52Y	ANTI PUMPING RELAY
63G1X	AUXILIARY RELAY FOR 63G1
63G2X	AUXILIARY RELAY FOR 63G2

OPERATING CHARACTERISTICS			
DEVICE	NOMINAL VOLTAGE	CURRENT	OPERATING VOLTAGE RANGE
52C	125VDC	3.8 A	90-140 VDC
52T1,52T2	125VDC	6.6 A	70-140 VDC
88M	125VDC	START 25 A RUN 6 A	90-140 VDC

THIS DRAWING WAS CREATED FROM MEPPI DRAWING MD401932, REV. G

P:\04023\00\DWG\RECORD\WRC\CAD\WRC-E-130C.DWG

DGR ENGINEERING
ROCK RAPIDS, IOWA
(712) 472-2531

DATE	DRAWN BY	NO.	APPROVED BY	REVISION DESCRIPTION
06-20	SMW	1	PDK	CONFORMING TO CONSTRUCTION RECORDS
10-19	SMW	0	PDK	FOR CONSTRUCTION

BLACK HILLS ENERGY

WEST RAPID CITY SUBSTATION

AUXILIARY SCHEMATIC
CB 6WR16

DRAWN BY SMW DATE 1-19
APPROVED BY PDK DATE 1-19
DWG NO. WRC-E-130C
SECTION 1 SH 1

SWITCH 23474 89a/89b CONTACTS		
CONTACT	FUNCTION	DRAWING REFERENCE
1 — 89a — 2	87L-LNG	WRC-E-155A
3 — 89b — 4	SPARE	THIS DRAWING
5 — 89a — 6	21L-LNG	WRC-E-155B
7 — 89b — 8	SPARE	THIS DRAWING
9 — 89a — 10		
11 — 89b — 12		
13 — 89a — 14		
15 — 89b — 16		
17 — 89a — 18		
19 — 89b — 20		

STAGES ARE FIELD SET AS 'a' OR 'b' CONTACTS AND ARE ADJUSTABLE IN 15 DEGREE INCREMENTS.

SWITCH 23475 89a/89b CONTACTS		
CONTACT	FUNCTION	DRAWING REFERENCE
1 — 89a — 2	87L-SRC	WRC-E-156A
3 — 89b — 4	SPARE	THIS DRAWING
5 — 89a — 6	21L-SRC	WRC-E-156B
7 — 89b — 8	SPARE	THIS DRAWING
9 — 89a — 10		
11 — 89b — 12		
13 — 89a — 14		
15 — 89b — 16		
17 — 89a — 18		
19 — 89b — 20		

STAGES ARE FIELD SET AS 'a' OR 'b' CONTACTS AND ARE ADJUSTABLE IN 15 DEGREE INCREMENTS.

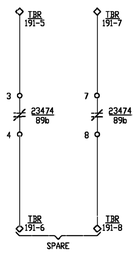

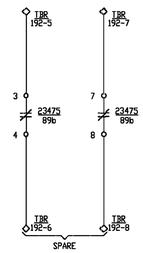

P:\04233\00\DWG\RECORD\WRC\CAD\WRC-E-140A.DWG

DGR ENGINEERING
ROCK RAPIDS, IOWA
(712) 472-2531

DATE	DRAWN BY	NO.	APPROVED BY	REVISION DESCRIPTION
06-20	SMW	1	PDK	CONFORMING TO CONSTRUCTION RECORDS
10-19	MEL	0	PDK	FOR CONSTRUCTION

BLACK HILLS ENERGY

WEST RAPID CITY SUBSTATION

AUXILIARY SCHEMATIC
230 kV GOAB AUX SWITCHES

DRAWN BY: MEL DATE: 08-19
APPROVED BY: PDK DATE: 08-19

DWG NO. WRC-E-140A REVISION 1

SWITCH 6WR18 89a/89b CONTACTS

CONTACT	FUNCTION	DRAWING REFERENCE
1 — 2 (89a)	21L-LNG69 PRI	WRC-E-166A
3 — 4 (89b)	SPARE	THIS DRAWING
5 — 6 (89a)	21L-LNG69 BU	WRC-E-166B
7 — 8 (89b)	SPARE	THIS DRAWING
9 — 10 (89a)		
11 — 12 (89b)		
13 — 14 (89a)		
15 — 16 (89b)		
17 — 18 (89a)		
19 — 20 (89b)		

STAGES ARE FIELD SET AS 'a' OR 'b' CONTACTS AND ARE ADJUSTABLE IN 15 DEGREE INCREMENTS.

SWITCH 6WR19 89a/89b CONTACTS

CONTACT	FUNCTION	DRAWING REFERENCE
1 — 2 (89a)	87L-CT4	WRC-E-167A
3 — 4 (89b)	SPARE	THIS DRAWING
5 — 6 (89a)	51-CT4	WRC-E-167B
7 — 8 (89b)	SPARE	THIS DRAWING
9 — 10 (89a)		
11 — 12 (89b)		
13 — 14 (89a)		
15 — 16 (89b)		
17 — 18 (89a)		
19 — 20 (89b)		

STAGES ARE FIELD SET AS 'a' OR 'b' CONTACTS AND ARE ADJUSTABLE IN 15 DEGREE INCREMENTS.

SWITCH 6WR20 89a/89b CONTACTS

CONTACT	FUNCTION	DRAWING REFERENCE
1 — 2 (89a)	87L-BF1 PRI	WRC-E-168A
3 — 4 (89b)	SPARE	THIS DRAWING
5 — 6 (89a)	87L-BF1 BU	WRC-E-168B
7 — 8 (89b)	SPARE	THIS DRAWING
9 — 10 (89a)		
11 — 12 (89b)		
13 — 14 (89a)		
15 — 16 (89b)		
17 — 18 (89a)		
19 — 20 (89b)		

STAGES ARE FIELD SET AS 'a' OR 'b' CONTACTS AND ARE ADJUSTABLE IN 15 DEGREE INCREMENTS.

SWITCH 6WR21 89a/89b CONTACTS

CONTACT	FUNCTION	DRAWING REFERENCE
1 — 2 (89a)	87L-BF2 PRI	WRC-E-169A
3 — 4 (89b)	SPARE	THIS DRAWING
5 — 6 (89a)	87L-BF2 BU	WRC-E-169B
7 — 8 (89b)	SPARE	THIS DRAWING
9 — 10 (89a)		
11 — 12 (89b)		
13 — 14 (89a)		
15 — 16 (89b)		
17 — 18 (89a)		
19 — 20 (89b)		

STAGES ARE FIELD SET AS 'a' OR 'b' CONTACTS AND ARE ADJUSTABLE IN 15 DEGREE INCREMENTS.

SWITCH 6WR22 89a/89b CONTACTS

CONTACT	FUNCTION	DRAWING REFERENCE
1 — 2 (89a)	87T1 PRI	WRC-E-161A
3 — 4 (89b)	87T1 PRI	WRC-E-161A
5 — 6 (89a)	6WR07 BLOCK TRIP TC#1	WRC-E-127A
7 — 8 (89b)		
9 — 10 (89a)	6WR07 BLOCK TRIP TC#2	WRC-E-127B
11 — 12 (89b)		
13 — 14 (89a)	6WR16 BLOCK TRIP TC#1	WRC-E-130A
15 — 16 (89b)		
17 — 18 (89a)	6WR16 BLOCK TRIP TC#2	WRC-E-130B
19 — 20 (89b)		

STAGES ARE FIELD SET AS 'a' OR 'b' CONTACTS AND ARE ADJUSTABLE IN 15 DEGREE INCREMENTS.

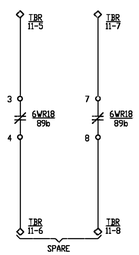

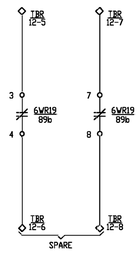

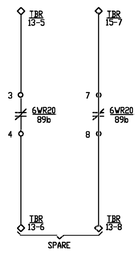

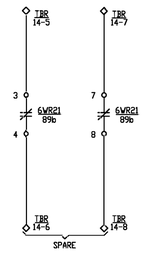

P:\04233\00\DWG\RECORD\WRC\CAD\WRC-E-140B.DWG

DGR ENGINEERING
ROCK RAPIDS, IOWA
(712) 472-2531

DATE	DRAWN BY	NO.	APPROVED BY	REVISION DESCRIPTION
06-20	SMW	1	PJK	CONFORMING TO CONSTRUCTION RECORDS
10-19	MEL	0	PJK	FOR CONSTRUCTION

BLACK HILLS ENERGY

WEST RAPID CITY SUBSTATION

AUXILIARY SCHEMATIC
69 kV GOAB AUX SWITCHES

DRAWN BY: MEL DATE: 08-19
APPROVED BY: PJK DATE: 08-19
DWG NO. WRC-E-140B REVISION 1

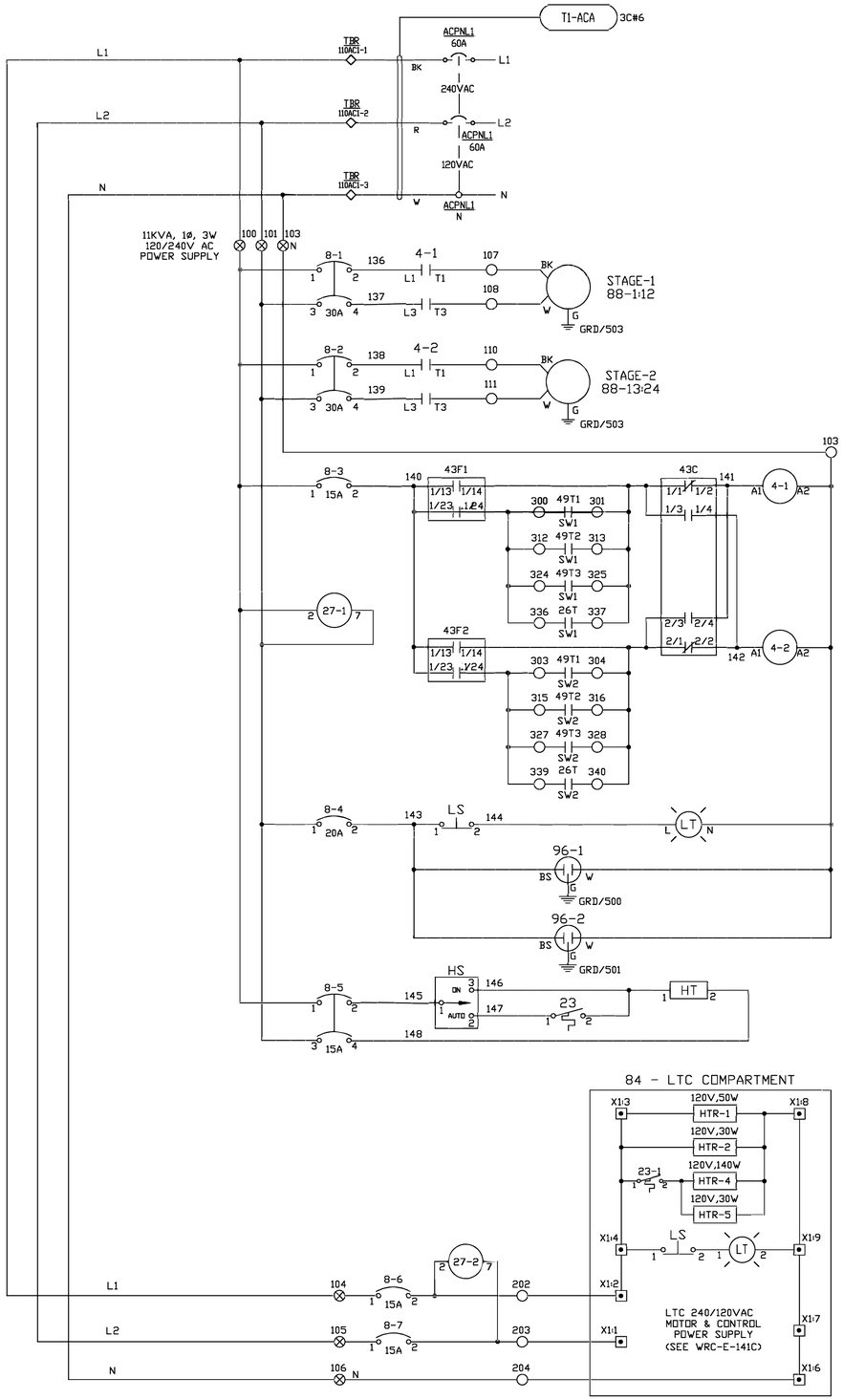

LEGEND :

SYM.	QTY.	MANUFACTURE	MANUFACTURE #	DESCRIPTION
4-1,2	2	LS	MC-32A-AC1206022	COOLING FANS CONTACTOR, 32AMP, 120VAC
8-1,2	2	EATON	EGE2030FFG	COOLING FANS CB., 2-POLE, 30AMP
8-3	1	EATON	EGB1015FFG	COOLING CONTROL CB., 1-POLE, 15AMP
8-4	1	EATON	EGB1020FFG	LIGHT & NON-GFI RECEPTACLES CB., 1-POLE, 20AMP
8-5	1	EATON	EGE2015FFG	CABINET HEATER CB., 2-POLE, 15AMP
8-6	1	EATON	EGB1015FFG	LTC ACCS. & CONTROL CB., 1-POLE, 15AMP
8-7	1	EATON	EGB1015FFG	LTC MOTOR CB., 1-POLE, 15AMP
8-8	1	EATON	EGB1015FFG	LTC P.T SUPPLY CB., 1-POLE, 15AMP
8-9	1	EATON	EGE2015FFG	SEAL-IN PANELS 125VDC POWER SUPPLY CB., 2-POLE, 15AMP
8-10	1	EATON	EGE2015FFG	SEL-2411,2600D 125VDC POWER SUPPLY CB., 2-POLE, 15AMP
23	1	STEGO	01140.9-00	CONTROL CABINET HEATER THERMOSTAT, 240VAC
26T,L	2	QUALITROL	TR6000-00029406	TANK & LTC OIL TEMPERATURE GAUGE
27-1	1	POTTER-BRUMFIELD	KRPA-11AG-240	COOLING FANS LOSS OF POWER RELAY, 240VAC
27-2	1	POTTER-BRUMFIELD	KRPA-11AG-240	LTC LOSS OF AC POWER RELAY, 240VAC
30	1	SEL	2410A2X3A3A5X1B40	PROGRAMMABLE AUTOMATION CONTROLLER
43C	1	EATON	10250T1311	COOLING CONTROL BANK1/BANK2 SELECTOR SWITCH
43F1,2	2	EATON	10250T1323	COOLING MAN/OFF/AUTO CONTROL SWITCH
43LR	1	EATON	10250T1311	LTC LOCAL/REMOTE SELECTOR SWITCH
43LOR	1	EATON	10250T3043	LTC LOWER/OFF/RAISE SELECTOR SWITCH
43MA	1	ELECTROSWITCH	9203DD	LTC MAN/AUTO LATCHING SW RELAY, 125VDC
49B1,2,3	3	OHMITE	L61JR60	WELL HEATER, 0.6 OHM
49Q1,2,3	3	OHMITE	L61JR60	WELL HEATER, 0.6 OHM
49R1,2,3	3	OHMITE	D50K3R0	VARIABLE RESISTOR, 3 OHM
49T-1,2,3	3	QUALITROL	TR6000-00029403	WINDING HOT-SPOT TEMPERATURE GAUGE
63NS	1	DELTA STAR	DELTAIR	AUTOMATIC INERT GAS SYSTEM
63SP1,2	2	QUALITROL	900-014-02	SUDDEN PRESSURE RELAY (SPR)
63PR1	1	QUALITROL	XPRD00-00036022	TANK PRESSURE RELIEF INDICATOR
63PR2	1	QUALITROL	208-60U	LTC PRESSURE RELIEF INDICATOR
63XP1,2	2	QUALITROL	909-300-01	SUDDEN PRESSURE SEAL-IN PANEL 125VDC
71T	1	QUALITROL	LLG032-00025700	TRANSFORMER OIL LEVEL INDICATOR
71L	1	QUALITROL	(BY RM)	LTC OIL LEVEL INDICATOR
84	1	REINHAUSEN	RMV-II-1500-72.5	VACUUM TYPE LOAD TAP CHANGER
88-1:24	24	KRENZ	F26X-A14712-108	COOLING FANS 1140 RPM, SINGLE PHASE, 1/3HP, 208/230V
90	1	REINHAUSEN	TC250-P-P-E1-00	LTC AUTOMATIC CONTROL PANEL WITH TC250-67 ADAPTER
96-1,2	2	HUBBELL	HBL5262I	125V, 15AMP, NON-GFI TYPE DUPLEX RECEPTACLE
ACT	1	BECKWITH	M-0169A	LTC AUX. CURRENT TRANSFORMER
CAB	1	WIEGMANN	60X36X16	CONTROL CABINET 60Hx36Wx16D
FU	1	MARATHON	F30A2S	FUSE HOLDER 2-POLE WITH (2) 10A NON TYPE FUSE
HS	1	SELECTA-SW	SS206-15-BG	CABINET HEATER CONTROL SWITCH
HT	1	STEGO	02810.0-00	CONTROL CABINET FAN HEATER 240V, 400W
LS	1	SELECTA-SW	SS214-14-BG	CONTROL CABINET LIGHT SWITCH
LT	1	STEGO	02542.3-11	CONTROL CABINET LED LIGHT
PB-AC	2	MARATHON	1423123	POWER SUPPLY TERMINAL BLOCK, 3-PDINT
PB-DC	1	MARATHON	1422123	POWER SUPPLY TERMINAL BLOCK, 2-PDINT
RTD1	1	OMEGA	PR-12-2-100-1/4-9-E	HV WINDING TEMPERATURE RTD, 100 OHM PLATINUM
RTD2	1	OMEGA	PR-12-2-100-1/4-9-E	LV WINDING TEMPERATURE RTD, 100 OHM PLATINUM
RTD3	1	OMEGA	PR-12-2-100-1/4-9-E	TV WINDING TEMPERATURE RTD, 100 OHM PLATINUM
RTD4	1	OMEGA	PR-12-2-100-1/4-6-E	TOP OIL TEMPERATURE RTD, 100 OHM PLATINUM
RTD5	1	OMEGA	PR-12-2-100-1/4-6-E	LTC OIL TEMPERATURE RTD, 100 OHM PLATINUM
RTD6	1	QUALITROL	103-047-01	AMBIENT TEMPERATURE RTD, 100 OHM PLATINUM
RTDM	1	SEL	2600D01X	RTD INPUT MODULE, 125VDC, WITH ST FIBER OPTIC PORT
SB	16	GENERAL EL.	EB27B12S	SHORTING BLOCK, 12-PDINT
TB	15	GENERAL EL.	EB25B12	TERMINAL BLOCK, 12-PDINT
TP-R/BK	2	NEWARK	257-102/3	LTC PT TEST PLUG

27-1
LOSS OF MAIN AC POWER
252 273
ALARM
TO 30-D01
(WRC-E-141B)

27-2
LOSS OF LTC AC POWER
252 273
ALARM
TO 30-D01
(WRC-E-141B)

4-1
COOL. GROUP 1 ON
252 275
STATUS
TO 30-E01
(WRC-E-141B)

4-2
COOL. GROUP 2 ON
252 275
STATUS
TO 30-E01
(WRC-E-141B)

43F1,2
COOLING CONTROL SW.

BLOCK	CONTACTS		MANUAL	POSITION OFF	POSITION AUTO
1 T2	13-14	NO	X		
	23-24	NO			X

43C
COOLING LEAD BANK SELECTOR SWITCH

BLOCK	CONTACTS		POSITION BANK 1	POSITION BANK 2
1 T1	1-2	NC	X	
	3-4	NO		X
2 T1	1-2	NC	X	
	3-4	NO		X

WIRING DIAGRAM SYMBOLS :

- TERMINAL, CONTROL CABINET
- TERMINAL, POWER BLOCK
- TERMINAL, NITROGEN CABINET
- TERMINAL, LTC MECHANISM
- TERMINAL, LTC AUTOMATIC CONTROL
- TERMINAL, SPR SEAL-IN PANEL
- JUMPER
- WIRING TERMINATION ID
- WIRE COLOR CODE (BK,R,..etc.)
- LIGHT COLOR CODE (BS,WS)
- P.T AND C.T POLARITY

NOTES

1. ALL EQUIPMENT IS SHOWN IN DE-ENERGIZED POSITION.
2. INDICATING DEVICES ARE SHOWN WITH TEMPERATURE, PRESSURE, AND LEVELS AT NORMAL OPERATION CONDITION.

THIS DRAWING WAS CREATED FROM DELTA STAR DRAWING F843450, SHEET 1, REV. 1.

P:\043230\00\DWG\RECORD\WRC\CAD\WRC-E-141A.DWG

DGR ENGINEERING
ROCK RAPIDS, IOWA
(712) 472-2531

DATE	DRAWN BY	NO.	APPROVED BY	REVISION DESCRIPTION
06-20	SMW	1	PDK	CONFORMING TO CONSTRUCTION RECORDS
2-2020	SMW	0	PDK	FOR CONSTRUCTION

BLACK HILLS ENERGY

WEST RAPID CITY SUBSTATION

CONTROL SCHEMATIC
XFMR T1

DRAWN BY SMW DATE 1-2020
APPROVED BY PDK DATE 1-2020
DWG NO. WRC-E-141A
SECTION 1 SH

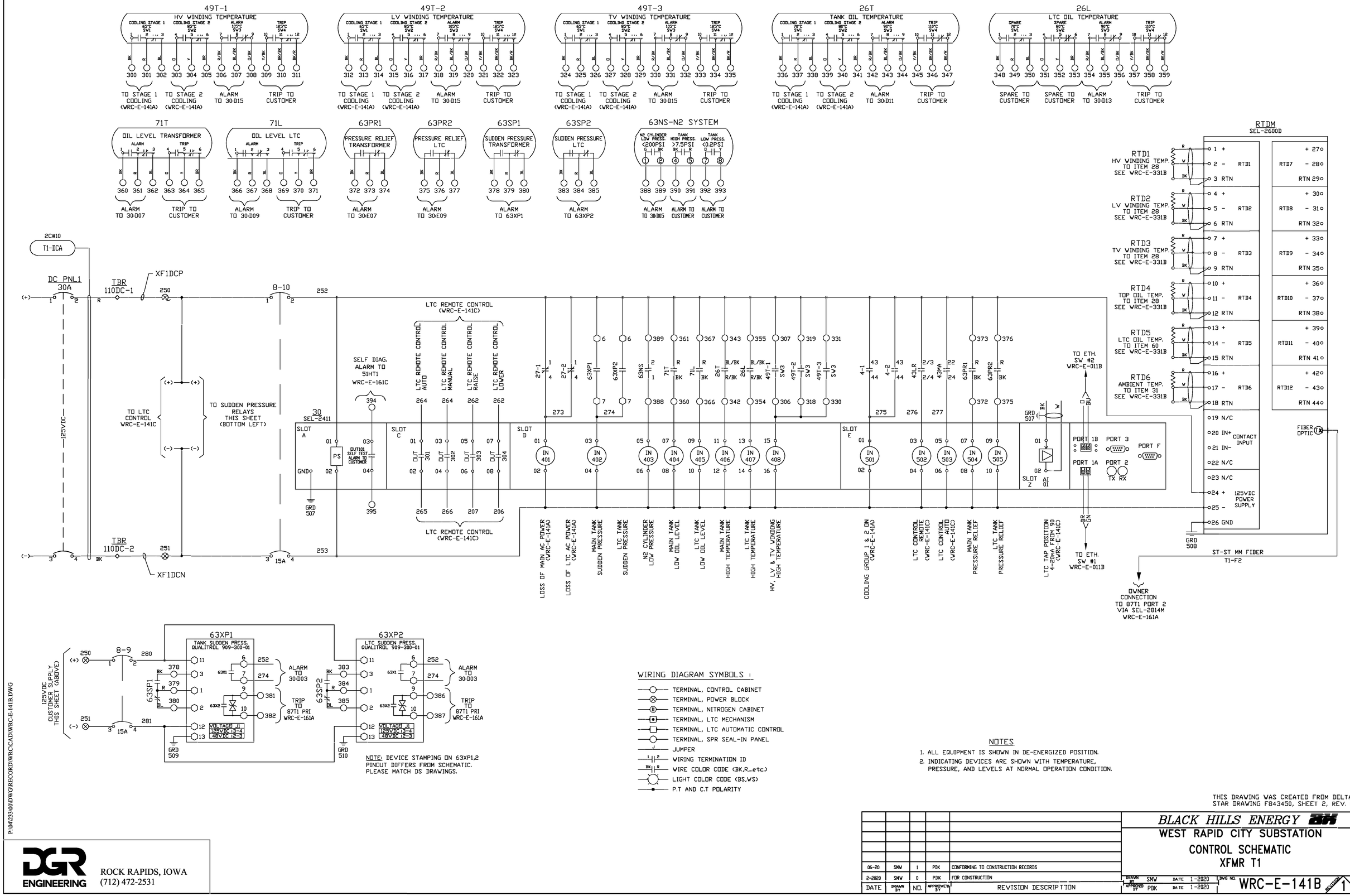
49T-1
HV WINDING TEMPERATURE
COOLING STAGE 1 65°C SW1
COOLING STAGE 2 85°C SW2
ALARM 105°C SW3
TRIP 125°C SW4
300 301 302 303 304 305 306 307 308 309 310 311
TO STAGE 1 COOLING (WRC-E-141A)
TO STAGE 2 COOLING (WRC-E-141A)
ALARM TO 30:D15
TRIP TO CUSTOMER
49T-2
LV WINDING TEMPERATURE
312 313 314 315 316 317 318 319 320 321 322 323
49T-3
TV WINDING TEMPERATURE
324 325 326 327 328 329 330 331 332 333 334 335
26T
TANK OIL TEMPERATURE
COOLING STAGE 1 70°C SW1
COOLING STAGE 2 80°C SW2
ALARM 90°C SW3
TRIP 110°C SW4
336 337 338 339 340 341 342 343 344 345 346 347
TO STAGE 1 COOLING (WRC-E-141A)
TO STAGE 2 COOLING (WRC-E-141A)
ALARM TO 30:D11
TRIP TO CUSTOMER
26L
LTC OIL TEMPERATURE
SPARE 70°C SW1
SPARE 80°C SW2
ALARM 90°C SW3
TRIP 110°C SW4
348 349 350 351 352 353 354 355 356 357 358 359
SPARE TO CUSTOMER
SPARE TO CUSTOMER
ALARM TO 30:D13
TRIP TO CUSTOMER
71T
OIL LEVEL TRANSFORMER
ALARM
TRIP
360 361 362 363 364 365
ALARM TO 30:D07
TRIP TO CUSTOMER
71L
OIL LEVEL LTC
366 367 368 369 370 371
ALARM TO 30:D09
TRIP TO CUSTOMER
63PR1
PRESSURE RELIEF TRANSFORMER
372 373 374
ALARM TO 30:E07
63PR2
PRESSURE RELIEF LTC
375 376 377
ALARM TO 30:E09
63SP1
SUDDEN PRESSURE TRANSFORMER
378 379 380
ALARM TO 63XP1
63SP2
SUDDEN PRESSURE LTC
383 384 385
ALARM TO 63XP2
63NS-N2 SYSTEM
N2 CYLINDER LOW PRESS. <200PSI
TANK HIGH PRESS. >7.5PSI
TANK LOW PRESS. <0.2PSI
388 389 390 391 392 393
ALARM TO 30:D05
ALARM TO CUSTOMER
ALARM TO CUSTOMER
RTDM
SEL-2600D
RTD1 HV WINDING TEMP. TO ITEM 28 SEE WRC-E-331B
RTD2 LV WINDING TEMP. TO ITEM 28 SEE WRC-E-331B
RTD3 TV WINDING TEMP. TO ITEM 28 SEE WRC-E-331B
RTD4 TOP OIL TEMP. TO ITEM 28 SEE WRC-E-331B
RTD5 LTC OIL TEMP. TO ITEM 60 SEE WRC-E-331B
RTD6 AMBIENT TEMP. TO ITEM 31 SEE WRC-E-331B
CONTACT INPUT
125VDC POWER SUPPLY
FIBER OPTIC
2C#10
T1-DCA
DC PNL1
30A
TBR
110DC-1
XF1DCP
250
8-10
252
125VDC
TO LTC CONTROL WRC-E-141C
TO SUDDEN PRESSURE RELAYS THIS SHEET (BOTTOM LEFT)
LTC REMOTE CONTROL (WRC-E-141C)
LTC REMOTE CONTROL AUTO
LTC REMOTE CONTROL MANUAL
LTC REMOTE CONTROL RAISE
LTC REMOTE CONTROL LOWER
SELF DIAG. ALARM TO 51HT1 WRC-E-161C
394
264
262
30
SEL-2411
SLOT A
SLOT C
SLOT D
SLOT E
SLOT Z
DUT101 SELF TEST ALARM TO CUSTOMER
GRD 507
395
265 266 207 206
LTC REMOTE CONTROL (WRC-E-141C)
TBR
110DC-2
251
253
XF1DCN
TO ETH. SW #2 WRC-E-011B
TO ETH. SW #1 WRC-E-011B
ST-ST MM FIBER T1-F2
OWNER CONNECTION TO 87T1 PORT 2 VIA SEL-2814M WRC-E-161A
LOSS OF MAIN AC POWER (WRC-E-141A)
LOSS OF LTC AC POWER (WRC-E-141A)
MAIN TANK SUDDEN PRESSURE
LTC TANK SUDDEN PRESSURE
N2 CYLINDER LOW PRESSURE
MAIN TANK LOW OIL LEVEL
LTC TANK LOW OIL LEVEL
MAIN TANK HIGH TEMPERATURE
LTC TANK HIGH TEMPERATURE
HV, LV & TV WINDING HIGH TEMPERATURE
COOLING GROUP 1 & 2 ON (WRC-E-141A)
LTC CONTROL REMOTE (WRC-E-141C)
LTC CONTROL AUTO (WRC-E-141C)
MAIN TANK PRESSURE RELIEF
LTC TANK PRESSURE RELIEF
LTC TAP POSITION 4-20mA FROM 90 (WRC-E-141C)
63XP1
TANK SUDDEN PRESS. QUALITROL 909-300-01
63XP2
LTC SUDDEN PRESS. QUALITROL 909-300-01
125VDC CUSTOMER SUPPLY THIS SHEET (ABOVE)
280
281
ALARM TO 30:D03
TRIP TO 87T1 PRI WRC-E-161A
VOLTAGE JI
125VDC 13-4
48VDC 12-3
GRD 509
GRD 510
NOTE: DEVICE STAMPING ON 63XP1,2 PINOUT DIFFERS FROM SCHEMATIC. PLEASE MATCH DS DRAWINGS.
WIRING DIAGRAM SYMBOLS :
TERMINAL, CONTROL CABINET
TERMINAL, POWER BLOCK
TERMINAL, NITROGEN CABINET
TERMINAL, LTC MECHANISM
TERMINAL, LTC AUTOMATIC CONTROL
TERMINAL, SPR SEAL-IN PANEL
JUMPER
WIRING TERMINATION ID
WIRE COLOR CODE (BK,R,.etc.)
LIGHT COLOR CODE (BS,WS)
P.T AND C.T POLARITY
NOTES
1. ALL EQUIPMENT IS SHOWN IN DE-ENERGIZED POSITION.
2. INDICATING DEVICES ARE SHOWN WITH TEMPERATURE, PRESSURE, AND LEVELS AT NORMAL OPERATION CONDITION.
THIS DRAWING WAS CREATED FROM DELTA STAR DRAWING F843450, SHEET 2, REV. 0.
P:\0423300\DWGRECORD\WRCCADWRC-E-141B.DWG
DGR ENGINEERING
ROCK RAPIDS, IOWA
(712) 472-2531
06-20 SMW 1 PDK CONFORMING TO CONSTRUCTION RECORDS
2-2020 SMW 0 PDK FOR CONSTRUCTION
DATE DRAWN BY NO. APPROVED BY REVISION DESCRIPTION
BLACK HILLS ENERGY
WEST RAPID CITY SUBSTATION
CONTROL SCHEMATIC
XFMR T1
DRAWN BY SMW DATE 1-2020 DWG NO. WRC-E-141B REVISION 1
APPROVED BY PDK DATE 1-2020

LTC LEGEND

8-2	MOTOR PROTECTIVE BREAKER
49	MOTOR THERMAL RELAY
49RL	MOTOR THERMAL ALARM INDICATING LIGHT (RED)
CS-A	RAISE/LOWER CONTROL SWITCH
LE	LIGHT EMITTER
LP	LIGHT PIPE
LR	LIGHT RECEIVER
LS-1,LS-2	END POSITION SWITCH
SP	SUPERVISION POWER
VIM	VACUUM INTERRUPTOR MONITOR
VSW	VACUUM SWITCH
84H-1,2	HAND CRANK INTERLOCK SWITCH
84L	MOTOR LOWER CONTACTOR
84M	MOTOR
84R	MOTOR RAISE CONTACTOR
84Y	COUPLING RELAY FOR AUTOMATIC PASSAGE OF POSITIONS
84Z	AUXILIARY CONTACTOR
86	SEQUENCE MONITOR
86GL	SUPERVISORY POWER INDICATING LIGHT (GREEN)
86RL	LOCKOUT INDICATING LIGHT (RED)
86X	LOCKOUT AUXILIARY CONTACTOR
CLL	LOWER END POSTION SWITCH
CLR	RAISE END POSITION SWITCH
101	CAM-OPERATED SWITCH
102	CAM-OPERATED SWITCH
186,187	MONITORING NON-DIRECTIONAL CONTROL CAM SWITCH
113A,113B	DIRECTIONAL CAM SWITCH
120AL	LOWER SEAL DIRECTIONAL CAM SWITCH
120AR	RAISE SEAL DIRECTIONAL CAM SWITCH
122,123	CAM-OPERATED DIRECTIONAL SWITCH

SEE REINHAUSEN MD-III MOTOR DRIVE DRAWINGS FOR COMPLETE LTC LEGEND

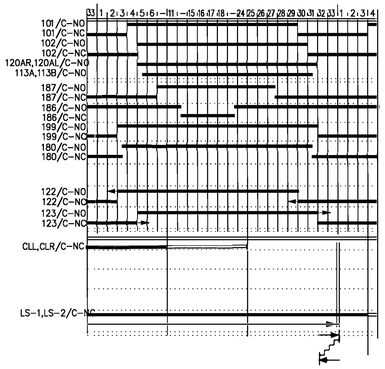

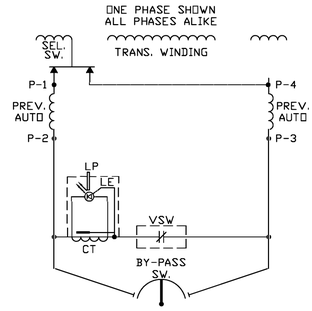

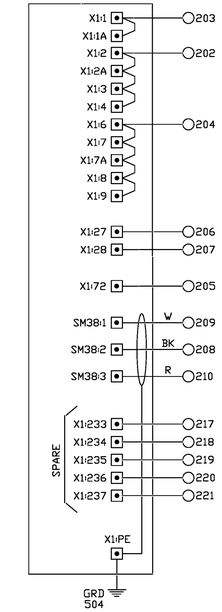

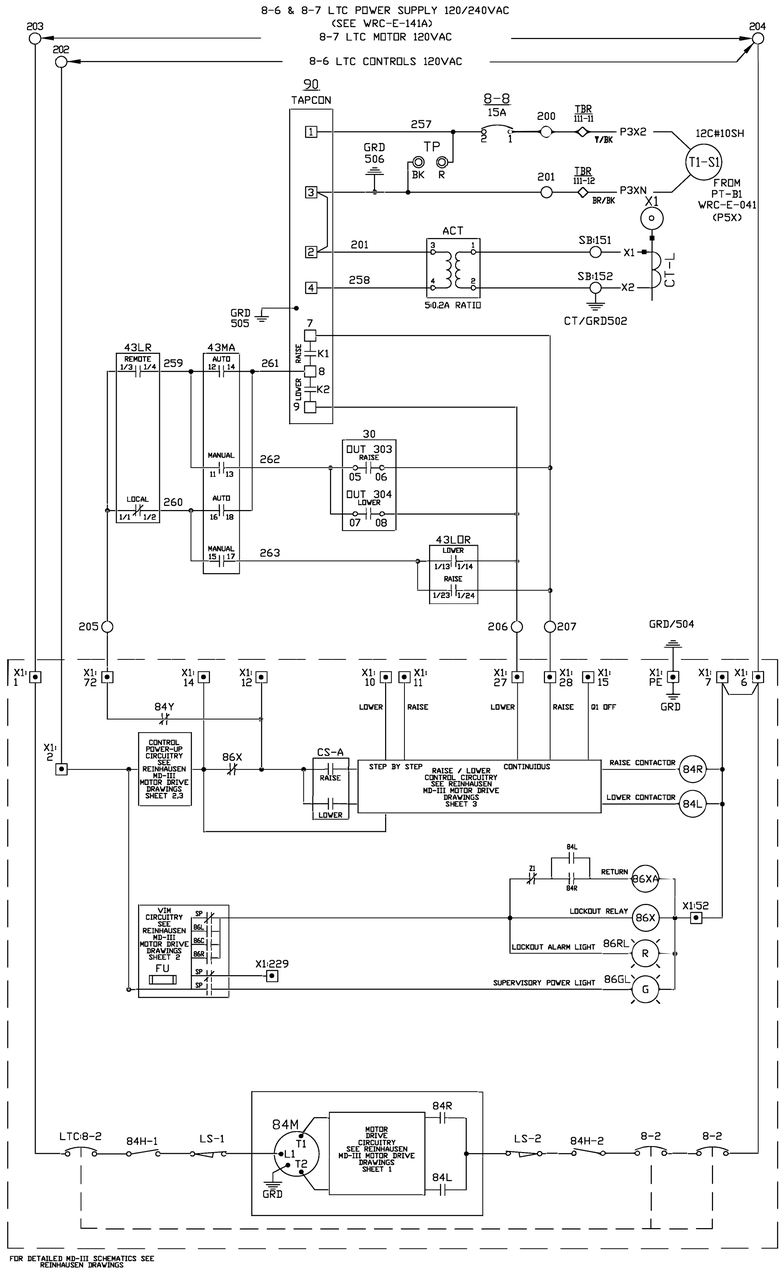

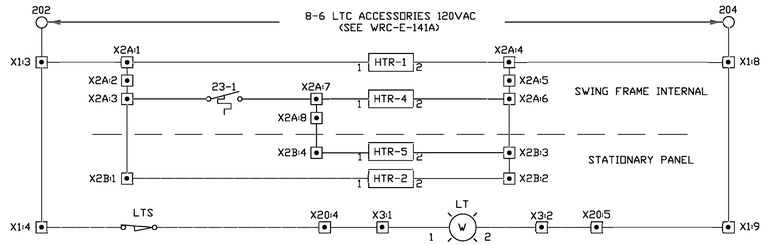

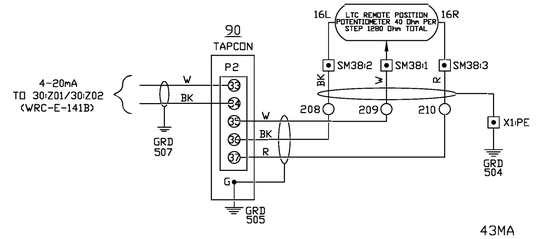

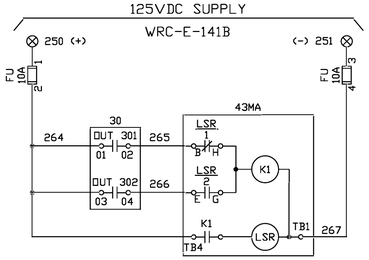

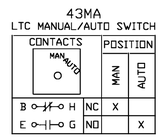

WIRING DIAGRAM SYMBOLS :

- TERMINAL, CONTROL CABINET
- TERMINAL, POWER BLOCK
- TERMINAL, NITROGEN CABINET
- TERMINAL, LTC MECHANISM
- TERMINAL, LTC AUTOMATIC CONTROL
- TERMINAL, SPR SEAL-IN PANEL
- JUMPER
- WIRING TERMINATION ID
- WIRE COLOR CODE (BK,R,..etc.)
- LIGHT COLOR CODE (BS,WS)
- P.T AND C.T POLARITY

43LR LTC LOCAL/REMOTE SELECTOR SW.

BLOCK	CONTACTS		POSITION LOCAL	POSITION REMOTE
1 T1	1 — 2	NC	X	
	3 — 4	NO		X
10 T1	1 — 2	NC	X	
	3 — 4	NO		X

43LOR LTC LOWER/OFF/RAISE SW.

BLOCK	CONTACTS		POSITION LOWER	POSITION OFF	POSITION RAISE
1 T2	13 — 14	NO	X		
	23 — 24	NO			X

43MA LTC MANUAL/AUTO SWITCH

DECK	CONTACTS		POSITION MAN	POSITION AUTO
1	11 — 13		X	
	12 — 14			X
	15 — 17		X	
	16 — 18			X
2	21 — 23		X	
	22 — 24			X
	25 — 27		X	
	26 — 28			X
3	31 — 33		X	
	32 — 34			X
	35 — 37		X	
	36 — 38			X

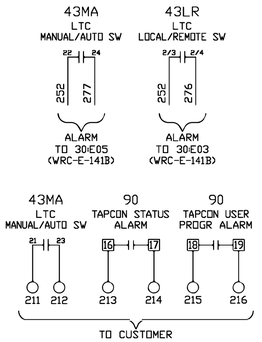

THIS DRAWING WAS CREATED FROM DELTA STAR DRAWING F843457, REV. 0.

DATE	DRAWN BY	NO.	APPROVED BY	REVISION DESCRIPTION
06-20	SMW	1	PDK	CONFORMING TO CONSTRUCTION RECORDS
2-2020	SMW	0	PDK	FOR CONSTRUCTION

BLACK HILLS ENERGY

WEST RAPID CITY SUBSTATION

CONTROL SCHEMATIC
XFMR T1 LTC

DRAWN BY SMW DATE 1-2020 DWG NO. WRC-E-141C REVISION 1

APPROVED BY PDK DATE 1-2020

DGR ENGINEERING
ROCK RAPIDS, IOWA
(712) 472-2531

P:\0423300\DWGRECORD\WRCCAD\WRC-E-141C.DWG

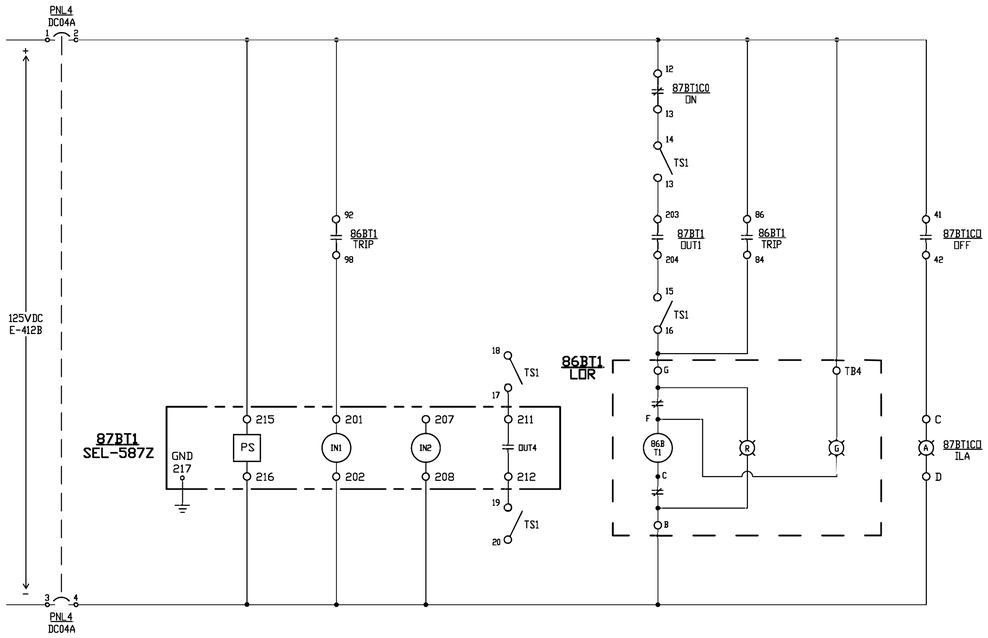

86BT1		POSITION			
DECK	CONTACTS	TRIP	RESET	FUNCTION	DRAWING REFERENCE
1	11 — 13		×	BLOCK CLOSE 23464	WRC-E-122A
	12 — 18	×		TRIP 23464 TC#2	WRC-E-122B
	15 — 17		×	BLOCK CLOSE 23470	WRC-E-124A
	16 — 14	×		TRIP 23470 TC#2	WRC-E-124B
2	21 — 23		×		
	22 — 28	×		TRIP 6WR07 TC#2	WRC-E-127B
	25 — 27		×		
	26 — 24	×		TRIP 6WR16 TC#2	WRC-E-130B
3	31 — 33		×		
	32 — 38	×		TRIP 23464 TC#1	WRC-E-122A
	35 — 37		×		
	36 — 34	×		TRIP 23470 TC#1	WRC-E-124A
4	41 — 43		×		
	42 — 48	×		TRIP 6WR07 TC#1	WRC-E-127A
	45 — 47		×		
	46 — 44	×		TRIP 6WR16 TC#1	WRC-E-130A
5	51 — 53		×		
	52 — 58	×		ØA CURRENT	WRC-E-101
	55 — 57		×		
	56 — 54	×		ØB CURRENT	WRC-E-101
6	61 — 63		×		
	62 — 68	×		ØC CURRENT	WRC-E-101
	65 — 67		×		
	66 — 64	×		BFI TO 51HT1	WRC-E-161C
7	71 — 73		×		
	72 — 78	×		BFI & B.C. TO 51-CT4	WRC-E-167B
	75 — 77		×		
	76 — 74	×		BFI & B.C. TO 87T1 PRI	WRC-E-161A
8	81 — 83		×		
	82 — 88	×		BFI TO 21L-SRC	WRC-E-156B
	85 — 87		×		
	86 — 84	×		LOR INDICATING LIGHT	THIS DRAWING
9	91 — 93		×		
	92 — 98	×		STATUS TO 87BT1	THIS DRAWING
	95 — 97		×		
	96 — 94	×		STATUS TO RIO-3	WRC-E-183B
10	101 — 103		×		
	102 — 108	×			
	105 — 107		×		
	106 — 104	×			

ELECTROSWITCH #78PB10D

87BT1 OUTPUTS

CONTACT	FUNCTION	DRAWING REFERENCE
203 — 204 (OUT1)	TRIP 86BT1	THIS DRAWING
205 — 206 (OUT2)		
209 — 210 (OUT3)		
211 — 212 (OUT4)	RELAY TEST	THIS DRAWING
213 — 214 (ALARM)	SELF DIAGNOSTIC	WRC-E-161C

87BT1 INPUTS

INPUT	FUNCTION	DRAWING REFERENCE
201 — 202 (IN1)	86BT1 STATUS	THIS DRAWING
207 — 208 (IN2)		

COMMUNICATION PORTS			
PORT	SPEED	FUNCTION	CONNECTION
F	19200	LOCAL	—
1	19200	SCADA	3555 RTU

87BT1CO		POSITION			
DECK	CONTACTS	ON	OFF	FUNCTION	DRAWING REFERENCE
	A — B				
	C — D			INDICATION	THIS DRAWING
	E — F				
	G — H				
1	11 — 12		×		
	12 — 13	×		86BT1 TRIP CKT	THIS DRAWING
	15 — 16		×		
	16 — 17	×			
2	21 — 22		×	STATUS TO 51HT1	WRC-E-161C
	22 — 23	×			
	25 — 26		×	AØ CURRENT	WRC-E-101
	26 — 27	×			
3	31 — 32		×	BØ CURRENT	WRC-E-101
	32 — 33	×			
	35 — 36		×	CØ CURRENT	WRC-E-101
	36 — 37	×			
4	41 — 42		×	INDICATION LIGHT	THIS DRAWING
	42 — 43	×			
	45 — 46		×		
	46 — 47	×			

NOTES:
1. ALL WIRING TO BE #12, UNLESS NOTED.
2. MULTI CONDUCTOR CABLE TO BE XHHW-2 WITH CPE JACKET.

LEGEND:
◇ INDICATES TERMINAL POINT

P:\04233\00\DWG\RECORD\WRC\CAD\WRC-E-151.DWG

DGR ENGINEERING
ROCK RAPIDS, IOWA
(712) 472-2531

DATE	DRAWN BY	NO.	APPROVED BY	REVISION DESCRIPTION
06-20	SMW	1	PDK	CONFORMING TO CONSTRUCTION RECORDS
10-19	SMW	0	PDK	FOR CONSTRUCTION

BLACK HILLS ENERGY

WEST RAPID CITY SUBSTATION

DC SCHEMATIC

230 kV BUS T1 DIFFERENTIAL RELAY

DRAWN BY SMW DATE 1-19
APPROVED BY PDK DATE 1-19

DWG NO. WRC-E-151 REVISION 1

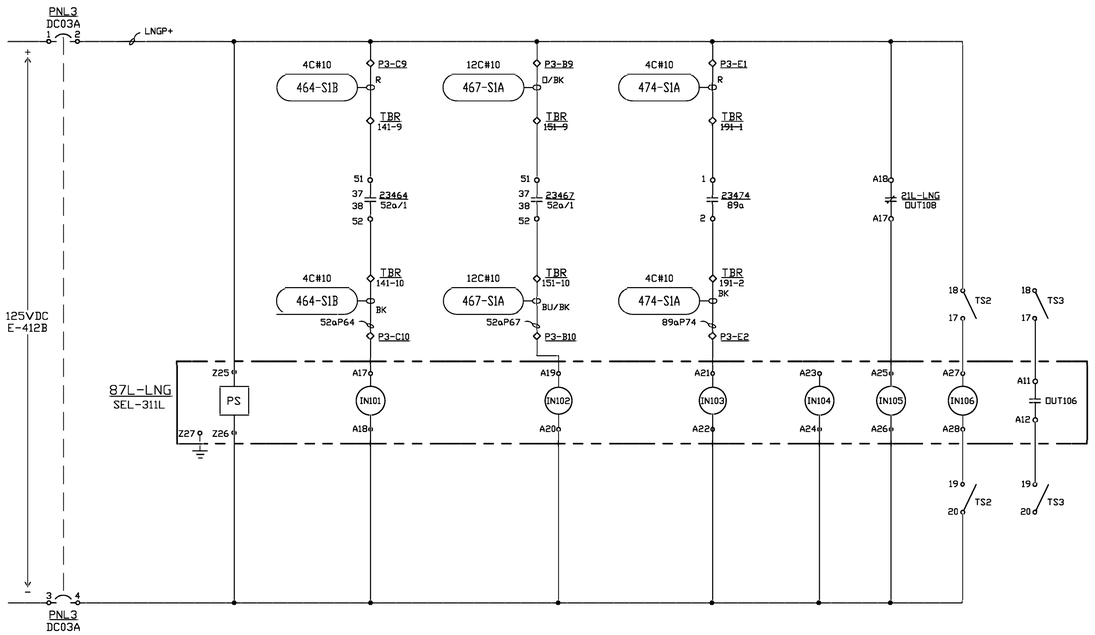

87L-LNG OUTPUTS

CONTACT	FUNCTION	DRAWING REFERENCE
A01 — A02 OUT101	TRIP 23467 TC #1	WRC-E-123A
A03 — A04 OUT102	TRIP 23467 TC #2	WRC-E-123B
A05 — A06 OUT103		
A07 — A08 OUT104		
A09 — A10 OUT105	BLOCK CLOSE 23467	WRC-E-123A
A11 — A12 OUT106	RELAY TEST	THIS DRAWING
A13 — A14 OUT107		
A15 — A16 ALARM	SELF-DIAGNOSTIC	WRC-E-155B
B01 — B02 OUT201	TRIP 23464 TC #1	WRC-E-122A
B04 — B05 OUT202	TRIP 23464 TC #2	WRC-E-122B
B07 — B08 OUT203		
B09 — B10 OUT204		
B12 — B13 OUT205		
B15 — B16 OUT206		

87L-LNG INPUTS

INPUT	FUNCTION	DRAWING REFERENCE
A17 — A18 IN101	23464 52a	THIS DRAWING
A19 — A20 IN102	23467 52a	THIS DRAWING
A21 — A22 IN103	23474 89a	THIS DRAWING
A23 — A24 IN104		
A25 — A26 IN105	21L-LNG SELF-DIAGNOSTIC	THIS DRAWING
A27 — A28 IN106	LINE DIFF CUTOUT	THIS DRAWING

COMMUNICATION PORTS

PORT	SPEED	FUNCTION	CONNECTION
F	19200	LOCAL	-
1	N/A	N/A	-
2	N/A	N/A	-
3	N/A	N/A	-
5	10M	LAN	ETH. SW. #1
6	10M	LAN	ETH. SW. #2
CH.1	N/A	LINE COMM	MUX-NX64F
CH.2	N/A	LINE COMM	MUX-NX64F

NOTES:
1. ALL WIRING TO BE #12, UNLESS NOTED.
2. MULTI CONDUCTOR CABLE TO BE XHHW-2 WITH CPE JACKET.

LEGEND:
◇ INDICATES TERMINAL POINT

P:\04233\00\DWG\RECORD\WRC\CAD\WRC-E-155A.DWG

DGR ENGINEERING
ROCK RAPIDS, IOWA
(712) 472-2531

DATE	DRAWN BY	NO.	APPROVED BY	REVISION DESCRIPTION
06-20	SMW	1	PJK	CONFORMING TO CONSTRUCTION RECORDS
10-19	SMW	0	PJK	FOR CONSTRUCTION

BLACK HILLS ENERGY
WEST RAPID CITY SUBSTATION
DC SCHEMATIC
230 kV LANGE LINE PRI RELAY

DRAWN BY SMW DATE 1-19
APPROVED BY PJK DATE 1-19
DWG NO. WRC-E-155A
SECTION 1 NO

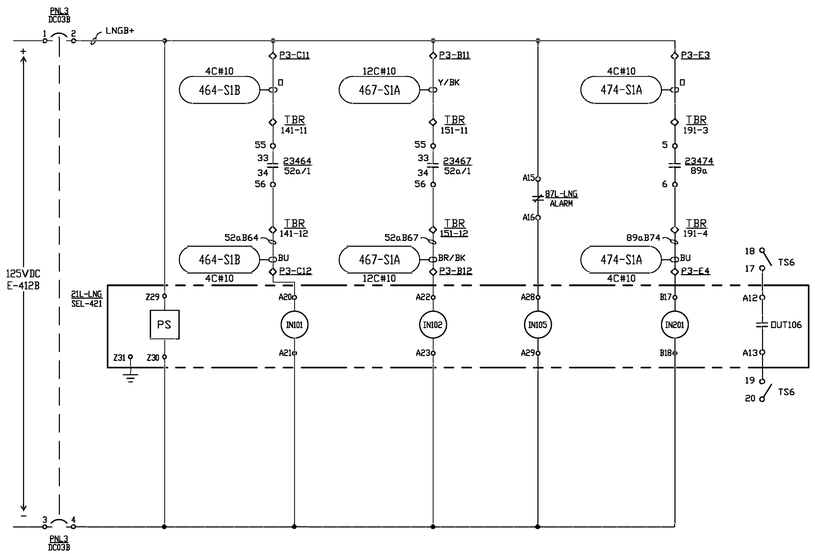

21L–LNG OUTPUTS

CONTACT	FUNCTION	DRAWING REFERENCE
A01 + OUT101 A02	TRIP 23467 COIL #1	WRC-E-123A
A03 + OUT102 A04	TRIP 23467 COIL #2	WRC-E-123B
A05 + OUT103 A06		
A07 OUT104 A08	CLOSE 23467	WRC-E-123A
A09 OUT105 A10	BLOCK CLOSE 23467	WRC-E-123A
A12 OUT106 A11 A13	RELAY TEST	THIS DRAWING
A15 OUT107 A14 A16		
A18 OUT108 A17 A19	SELF-DIAGNOSTIC	WRC-E-155A
B05 + TRIP B06	MANUAL TRIP 23467	WRC-E-123A
B07 + CLOSE B08	MANUAL CLOSE 23467	WRC-E-123A
B09 + OUT201 B10	TRIP 23464 COIL #1	WRC-E-122A
B11 + OUT202 B12	TRIP 23464 COIL #2	WRC-E-122B
B13 + OUT203 B14		
B15 + OUT204 B16	BLOCK CLOSE 23464	WRC-E-122A

COMMUNICATION PORTS

PORT	SPEED	FUNCTION	CONNECTION
F	19200	LOCAL	–
1	19200	LOCAL	–
2	N/A	N/A	–
3	N/A	N/A	–
5C	10M	LAN	ETH. SW. #1
5D	10M	LAN	ETH. SW. #2

21L–LNG INPUTS

INPUT	FUNCTION	DRAWING REFERENCE
A20 IN101 A21	23464 52a	THIS DRAWING
A22 IN102 A23	23467 52a	THIS DRAWING
A24 IN103 A25	23467 TCM#1	WRC-E-123A
A26 IN104 A27	23467 TCM#2	WRC-E-123B
A28 IN105 A29	87L-LNG SELF-DIAGNOSTIC	THIS DRAWING
A31 IN106 A30 IN107 A32		
B01 + CLOSE B02	23467 CLOSE IND	WRC-E-123A
B03 + OPEN B04	23467 OPEN IND	WRC-E-123A
B17 IN201 B18	23474 89a	THIS DRAWING
B19 IN202 B20		
B21 IN203 B22		
B32 IN204 B23		
IN205 B24		
IN206 B25		
IN207 B26		
IN208 B27		
IN209 B28		
IN210 B29		
IN211 B30		
IN212 B31		

21L–LNG INPUTS

INPUT	FUNCTION	DRAWING REFERENCE
B33 IN213 B34		
B35 IN214 B36		
B37 IN215 B38		
B48 IN216 B39		
IN217 B40		
IN218 B41		
IN219 B42		
IN220 B43		
IN221 B44		
IN222 B45		
IN223 B46		
IN224 B47		

NOTES:
1. ALL WIRING TO BE #12, UNLESS NOTED.
2. MULTI CONDUCTOR CABLE TO BE XHHW-2 WITH CPE JACKET.

LEGEND:
◇ INDICATES TERMINAL POINT

P:\04233\00\DWGRECORD\WRCCAD\WRC-E-155B.DWG

DGR ENGINEERING
ROCK RAPIDS, IOWA
(712) 472-2531

DATE	DRAWN BY	NO.	APPROVED BY	REVISION DESCRIPTION
06-20	SMW	1	PDK	CONFORMING TO CONSTRUCTION RECORDS
10-19	SMW	0	PDK	FOR CONSTRUCTION

BLACK HILLS ENERGY
WEST RAPID CITY SUBSTATION
DC SCHEMATIC
230 kV LANGE LINE BU RELAY

DRAWN BY SMW DATE 1-19
APPROVED BY PDK DATE 1-19
DWG NO. WRC-E-155B REVISION 1

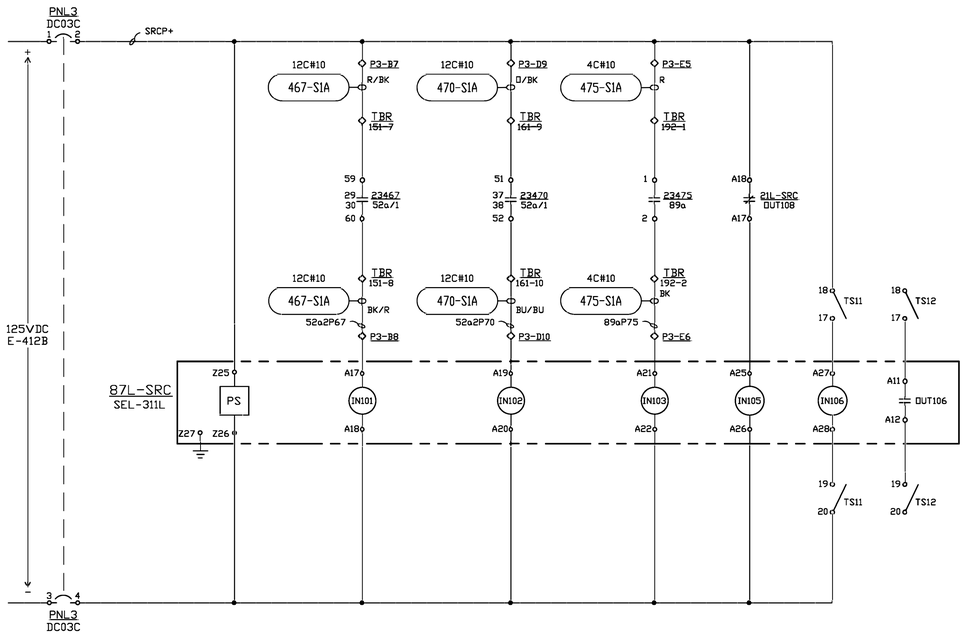

87L-SRC OUTPUTS

CONTACT	FUNCTION	DRAWING REFERENCE
A01 — A02 OUT101	TRIP 23470 TC #1	WRC-E-124A
A03 — A04 OUT102	TRIP 23470 TC #2	WRC-E-124B
A05 — A06 OUT103		
A07 — A08 OUT104		
A09 — A10 OUT105	BLOCK CLOSE 23470	WRC-E-124A
A11 — A12 OUT106	RELAY TEST	THIS DRAWING
A13 — A14 OUT107		
A15 — A16 ALARM	SELF-DIAGNOSTIC	WRC-E-156B
B01 — B02 OUT201	TRIP 23467 TC #1	WRC-E-123A
B04 — B05 OUT202	TRIP 23467 TC #2	WRC-E-123B
B07 — B08 OUT203		
B09 — B10 OUT204		
B12 — B13 OUT205		
B15 — B16 OUT206		

87L-SRC INPUTS

INPUT	FUNCTION	DRAWING REFERENCE
A17 — A18 IN101	23467 52a	THIS DRAWING
A19 — A20 IN102	23470 52a	THIS DRAWING
A21 — A22 IN103	23475 89a	THIS DRAWING
A23 — A24 IN104		
A25 — A26 IN105	21L-SRC SELF-DIAGNOSTIC	THIS DRAWING
A27 — A28 IN106	LINE DIFF CUTOUT	THIS DRAWING

COMMUNICATION PORTS

PORT	SPEED	FUNCTION	CONNECTION
F	19200	LOCAL	-
1	N/A	N/A	-
2	N/A	N/A	-
3	N/A	N/A	-
5	10M	LAN	ETH. SW. #1
6	10M	LAN	ETH. SW. #2
CH.1	N/A	LINE COMM	MUX-NX64F
CH.2	N/A	LINE COMM	MUX-NX64F

NOTES:
1. ALL WIRING TO BE #12, UNLESS NOTED.
2. MULTI CONDUCTOR CABLE TO BE XHHW-2 WITH CPE JACKET.

LEGEND:
◇ INDICATES TERMINAL POINT

P:\04233\00\DWG\RECORD\WRC\CAD\WRC-E-156A.DWG

DGR ENGINEERING
ROCK RAPIDS, IOWA
(712) 472-2531

DATE	DRAWN BY	NO.	APPROVED BY	REVISION DESCRIPTION
06-20	SMW	1	PDK	CONFORMING TO CONSTRUCTION RECORDS
10-19	SMW	0	PDK	FOR CONSTRUCTION

BLACK HILLS ENERGY
WEST RAPID CITY SUBSTATION
DC SCHEMATIC
230 kV SOUTH RAPID CITY PRI RELAY

DRAWN BY SMW DATE 1-19
APPROVED BY PDK DATE 1-19
DWG NO. WRC-E-156A REVISION 1

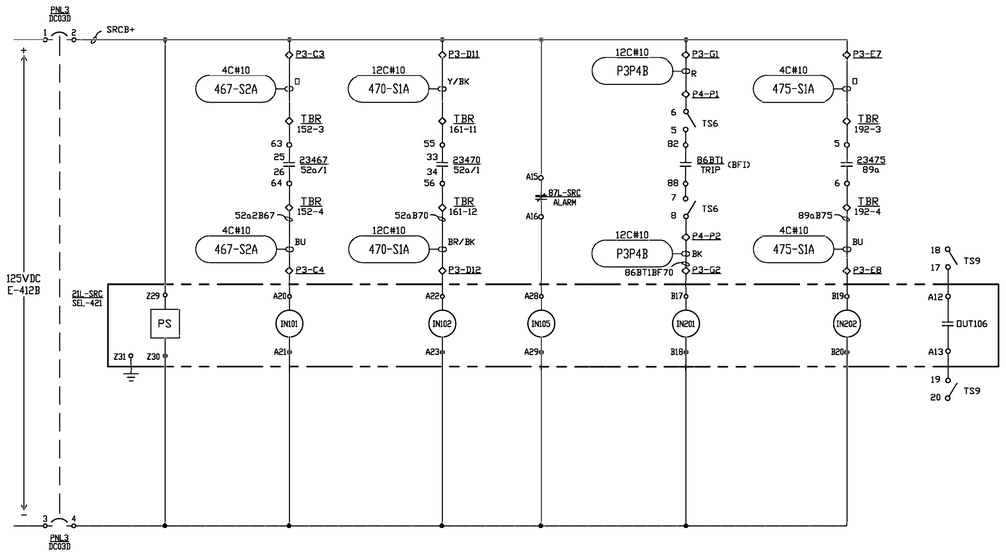

21L–SRC OUTPUTS

CONTACT	FUNCTION	DRAWING REFERENCE
A01 — A02 (OUT101)	TRIP 23470 COIL #1	WRC-E-124A
A03 — A04 (OUT102)	TRIP 23470 COIL #2	WRC-E-124B
A05 — A06 (OUT103)		
A07 — A08 (OUT104)	CLOSE 23470	WRC-E-124A
A09 — A10 (OUT105)	BLOCK CLOSE 23470	WRC-E-124A
A12 — A11 / A13 (OUT106)	RELAY TEST	THIS DRAWING
A15 — A14 / A16 (OUT107)		
A18 — A17 / A19 (OUT108)	SELF-DIAGNOSTIC	WRC-E-156A
B05 — B06 (TRIP)	MANUAL TRIP 23470	WRC-E-124A
B07 — B08 (CLOSE)	MANUAL CLOSE 23470	WRC-E-124A
B09 — B10 (OUT201)	TRIP 23467 COIL #1	WRC-E-123A
B11 — B12 (OUT202)	TRIP 23467 COIL #2	WRC-E-123B
B13 — B14 (OUT203)		
B15 — B16 (OUT204)		

COMMUNICATION PORTS

PORT	SPEED	FUNCTION	CONNECTION
F	19200	LOCAL	–
1	19200	LOCAL	–
2	N/A	N/A	–
3	N/A	N/A	–
5C	10M	LAN	ETH. SW. #1
5D	10M	LAN	ETH. SW. #2

21L–SRC INPUTS

INPUT	FUNCTION	DRAWING REFERENCE
A20 — A21 (IN101)	23467 52a	THIS DRAWING
A22 — A23 (IN102)	23470 52a	THIS DRAWING
A24 — A25 (IN103)	23470 TCM#1	WRC-E-124A
A26 — A27 (IN104)	23470 TCM#2	WRC-E-124B
A28 — A29 (IN105)	87L-SRC SELF-DIAGNOSTIC	THIS DRAWING
A31 — A30 / A32 (IN106 / IN107)		
B01 — B02 (CLOSE)	23470 CLOSE IND	WRC-E-124A
B03 — B04 (OPEN)	23470 OPEN IND	WRC-E-124A
B17 — B18 (IN201)	86BT1 STATUS (23470 BFI)	THIS DRAWING
B19 — B20 (IN202)	23475 89a	THIS DRAWING
B21 — B22 (IN203)		
B32 — B23 (IN204)		
B24 (IN205)		
B25 (IN206)		
B26 (IN207)		
B27 (IN208)		
B28 (IN209)		
B29 (IN210)		
B30 (IN211)		
B31 (IN212)		

21L–SRC INPUTS

INPUT	FUNCTION	DRAWING REFERENCE
B33 — B34 (IN213)		
B35 — B36 (IN214)		
B37 — B38 (IN215)		
B48 — B39 (IN216)		
B40 (IN217)		
B41 (IN218)		
B42 (IN219)		
B43 (IN220)		
B44 (IN221)		
B45 (IN222)		
B46 (IN223)		
B47 (IN224)		

NOTES:
1. ALL WIRING TO BE #12, UNLESS NOTED.
2. MULTI CONDUCTOR CABLE TO BE XHHW-2 WITH CPE JACKET.

LEGEND:
◇ INDICATES TERMINAL POINT

DGR ENGINEERING
ROCK RAPIDS, IOWA
(712) 472-2531

DATE	DRAWN BY	NO.	APPROVED BY	REVISION DESCRIPTION
06-20	SMW	1	PDK	CONFORMING TO CONSTRUCTION RECORDS
10-19	SMW	0	PDK	FOR CONSTRUCTION

BLACK HILLS ENERGY
WEST RAPID CITY SUBSTATION
DC SCHEMATIC
230 kV SOUTH RAPID CITY BU RELAY

DRAWN BY SMW DATE 1-19
APPROVED BY PDK DATE 1-19
DWG NO. WRC-E-156B REVISION 1

P:\042319\00\DWGRECORD\WRC\CAD\WRC-E-156B.DWG

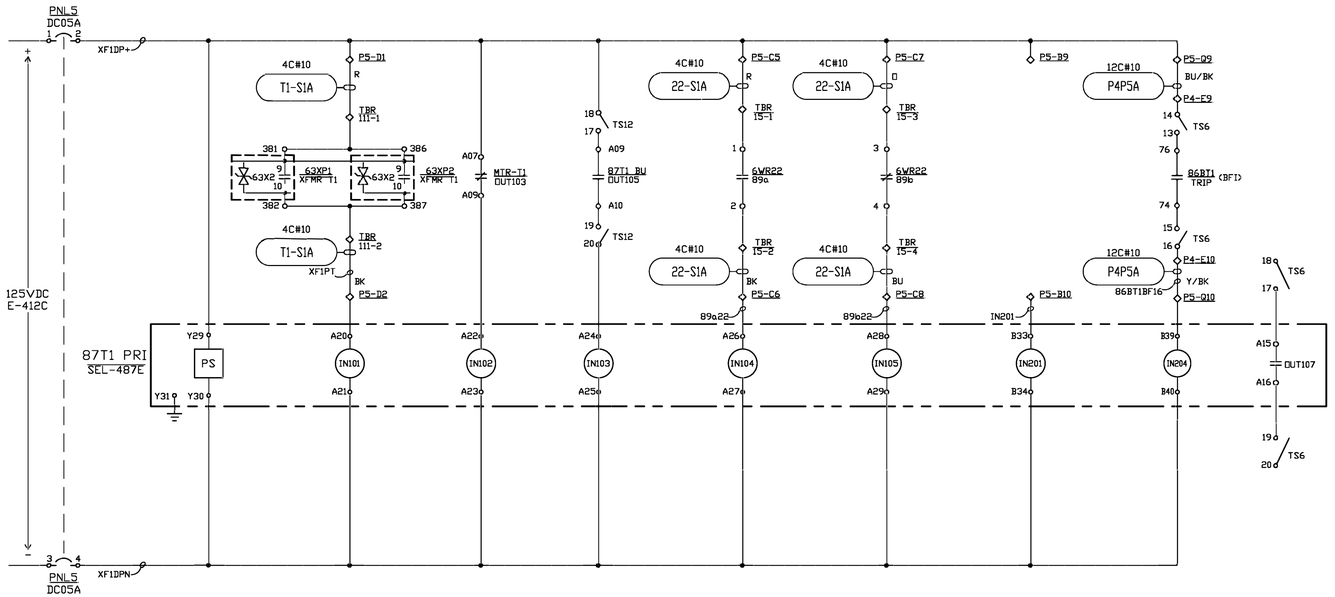

87T1 PRI OUTPUTS

CONTACT	FUNCTION	DRAWING REFERENCE
A01 + A02 OUT101	TRIP 23464 TC #1	WRC-E-122A
A03 + A04 OUT102	TRIP 23470 TC #1	WRC-E-124A
A05 + A06 OUT103	TRIP 6WR07 TC #1	WRC-E-127A
A07 A08 OUT104	TRIP 6WR16 TC #1	WRC-E-130A
A09 A10 OUT105	TRIP 6WR16 TC #2	WRC-E-130B
A12 A11 A13 OUT106	BLOCK CLOSE 6WR16	WRC-E-130A
A15 A14 A16 OUT107	RELAY TEST	THIS DRAWING
A18 A17 A19 OUT108	SELF-DIAGNOSTIC	WRC-E-161D
B01 B02 OUT201	CLOSE 6WR16	WRC-E-130A
B03 B04 OUT202		
B05 B06 OUT203		
B07 B08 OUT204		
B09 B10 OUT205		
B11 B12 OUT206		
B13 B14 OUT207		
B15 B16 OUT208		
B17 B18 OUT209		
B19 B20 OUT210		
B21 B22 OUT211		
B23 B24 OUT212		
B25 B26 OUT213		
B28 B27 B29 OUT214		
B31 B30 B32 OUT215		

87T1 PRI INPUTS

INPUT	FUNCTION	DRAWING REFERENCE
A20 A21 IN101	XFMR T1 SUDDEN PRESSURE TRIP	THIS DRAWING
A22 A23 IN102	MTR-T1 SELF-DIAGNOSTIC	THIS DRAWING
A24 A25 IN103	87T1 BU LOCKOUT	THIS DRAWING
A26 A27 IN104	89a 6WR22	THIS DRAWING
A28 A29 IN105	89b 6WR22	THIS DRAWING
A31 IN106 A30 A32 IN107		
B33 B34 IN201		
B35 B36 IN202	6WR16 TCM #1	WRC-E-130A
B37 B38 IN203	6WR16 TCM #2	WRC-E-130B
B39 B40 IN204	86BT1 STATUS (6WR16 BFI)	THIS DRAWING
B41 B42 IN205		
B43 B44 IN206		
B45 B46 IN207		
B47 B48 IN208		

COMMUNICATION PORTS			
PORT	SPEED	FUNCTION	CONNECTION
F	19200	LOCAL	-
1	19200	LOCAL	-
2	2400	THERMAL	RTDM (VIA SEL-2814M)
3	N/A	N/A	-
5C	10M	LAN	ETH. SW. #1
5D	10M	LAN	ETH. SW. #2

NOTES:
1. ALL WIRING TO BE #12, UNLESS NOTED.
2. MULTI CONDUCTOR CABLE TO BE XHHW-2 WITH CPE JACKET.
3. OWNER TO MAKE INTERNAL JUMPER ON RELAY FOR PIN 1 OF PORT 2. THIS SUPPLIES POWER OT THE SEL-2814M CONNECTED TO PORT 2.

LEGEND:
◇ INDICATES TERMINAL POINT

P:\04233\00\DWGRECORD\WRCCAD\WRC-E-161A.DWG

DGR ENGINEERING
ROCK RAPIDS, IOWA
(712) 472-2531

DATE	DRAWN BY	NO.	APPROVED BY	REVISION DESCRIPTION
06-20	SMW	1	PDK	CONFORMING TO CONSTRUCTION RECORDS
10-19	SMW	0	PDK	FOR CONSTRUCTION

BLACK HILLS ENERGY
WEST RAPID CITY SUBSTATION
DC SCHEMATIC
XFMR T1 PRI DIFF RELAY

DRAWN BY SMW DATE 1-19
APPROVED BY PDK DATE 1-19
DWG NO. WRC-E-161A REVISION 1

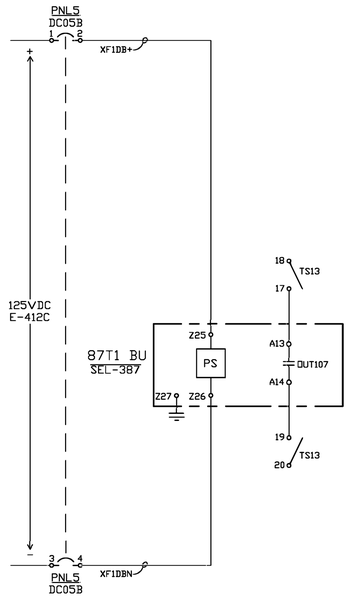

87T1 BU OUTPUTS		
CONTACT	FUNCTION	DRAWING REFERENCE
A01 — A02 OUT101	TRIP 23464 TC #2	WRC-E-122B
A03 — A04 OUT102	TRIP 23470 TC #2	WRC-E-124B
A05 — A06 OUT103	TRIP 6WR07 TC #2	WRC-E-127B
A07 — A08 OUT104	TRIP 6WR16 TC #2	WRC-E-130B
A09 — A10 OUT105	TRIP 86T1 VIA 87T1 PRI	WRC-E-161A
A11 — A12 OUT106		
A13 — A14 OUT107	RELAY TEST	THIS DRAWING
A15 — A16 ALARM	SELF-DIAGNOSTIC	WRC-E-161D

87T1 BU INPUTS		
INPUT	FUNCTION	DRAWING REFERENCE
A17 — A18 IN101		
A19 — A20 IN102		
A21 — A22 IN103		
A23 — A24 IN104		
A25 — A26 IN105		
A27 — A28 IN106		

COMMUNICATION PORTS			
PORT	SPEED	FUNCTION	CONNECTION
F	19200	LOCAL	-
1	N/A	N/A	-
2	19200	SCADA	RTU
3	N/A	N/A	-

NOTES:
1. ALL WIRING TO BE #12, UNLESS NOTED.
2. MULTI CONDUCTOR CABLE TO BE XHHW-2 WITH CPE JACKET.

LEGEND:
◇ INDICATES TERMINAL POINT

P:\04233\00\DWG\RECORD\WRC\CAD\WRC-E-161B.DWG

DGR ENGINEERING
ROCK RAPIDS, IOWA
(712) 472-2531

DATE	DRAWN BY	NO.	APPROVED BY	REVISION DESCRIPTION
06-20	SMW	1	PDK	CONFORMING TO CONSTRUCTION RECORDS
10-19	SMW	0	PDK	FOR CONSTRUCTION

BLACK HILLS ENERGY

WEST RAPID CITY SUBSTATION

DC SCHEMATIC
XFMR T1 BU DIFF RELAY

DRAWN BY SMW DATE 1-19
APPROVED BY PDK DATE 1-19

DWG NO. WRC-E-161B REVISION 1

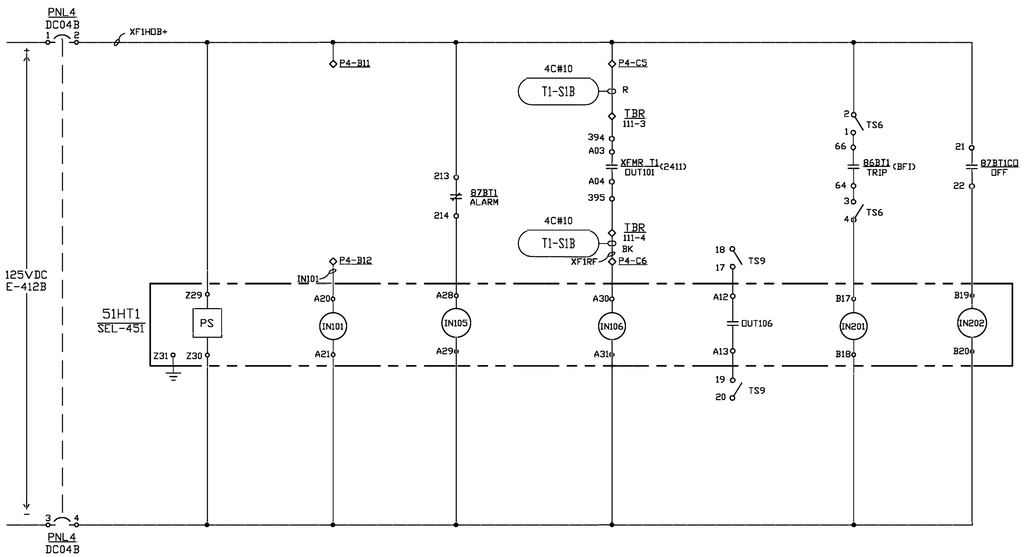

51HT1 OUTPUTS

CONTACT	FUNCTION	DRAWING REFERENCE
A01 / A02 — OUT101	TRIP 23464 TC #2	WRC-E-122B
A03 / A04 — OUT102	TRIP 23470 TC #2	WRC-E-124B
A05 / A06 — OUT103	TRIP 6WR07 TC #2	WRC-E-127B
A07 / A08 — OUT104	TRIP 6WR16 TC #2	WRC-E-130B
A09 / A10 — OUT105		
A12 / A11, A13 — OUT106	RELAY TEST	THIS DRAWING
A15 / A14, A16 — OUT107		
A18 / A17, A19 — OUT108	SELF DIAGNOSTIC	WRC-E-183B
B05 / B06 — TRIP	MANUAL TRIP 23464	WRC-E-122A
B07 / B08 — CLOSE	MANUAL CLOSE 23464	WRC-E-122A
B09 / B10 — OUT201	TRIP 23464 TC #1	WRC-E-122A
B11 / B12 — OUT202		
B13 / B14 — OUT203	CLOSE 23464	WRC-E-122A
B15 / B16 — OUT204	BLOCK CLOSE 23464	WRC-E-122A

51HT1 INPUTS

INPUT	FUNCTION	DRAWING REFERENCE
A20 / A21 — IN101		
A22 / A23 — IN102		
A24 / A25 — IN103	23464 TCM #1	WRC-E-122A
A26 / A27 — IN104	23464 TCM #2	WRC-E-122B
A28 / A29 — IN105	87BT1 SELF-DIAGNOSTIC	THIS DRAWING
A31 / A30, A32 — IN106, IN107	IN106: T1 SEL-2411 SELF-DIAGNOSTIC	THIS DRAWING
B01 / B02 — CLOSE	23464 CLOSE INDICATION	WRC-E-122A
B03 / B04 — OPEN	23464 OPEN INDICATION	WRC-E-122A
B17 / B18 — IN201	STATUS 86BT1 (BF1 23464)	THIS DRAWING
B19 / B20 — IN202	87TICO STATUS	THIS DRAWING
B21 / B22 — IN203		
B32 / B23 — IN204		
B24 — IN205		
B25 — IN206		
B26 — IN207		
B27 — IN208		
B28 — IN209		
B29 — IN210		
B30 — IN211		
B31 — IN212		

51HT1 INPUTS

INPUT	FUNCTION	DRAWING REFERENCE
B33 / B34 — IN213		
B35 / B36 — IN214		
B37 / B38 — IN215		
B48 / B39 — IN216		
B40 — IN217		
B41 — IN218		
B42 — IN219		
B43 — IN220		
B44 — IN221		
B45 — IN222		
B46 — IN223		
B47 — IN224		

COMMUNICATION PORTS			
PORT	SPEED	FUNCTION	CONNECTION
F	19200	LOCAL	-
1	19200	LOCAL	-
2	N/A	N/A	-
3	N/A	N/A	-
5C	10M	LAN	ETH. SW. #1
5D	10M	LAN	ETH. SW. #2

NOTES:
1. ALL WIRING TO BE #12, UNLESS NOTED.
2. MULTI CONDUCTOR CABLE TO BE XHHW-2 WITH CPE JACKET.

LEGEND:
◇ INDICATES TERMINAL POINT

DGR ENGINEERING
ROCK RAPIDS, IOWA
(712) 472-2531

DATE	DRAWN BY	NO.	APPROVED BY	REVISION DESCRIPTION
06-20	SMW	1	PDK	CONFORMING TO CONSTRUCTION RECORDS
10-19	SMW	0	PDK	FOR CONSTRUCTION

BLACK HILLS ENERGY

WEST RAPID CITY SUBSTATION

DC SCHEMATIC

XFMR T1 230 kV OC BU RELAY

DRAWN BY SMW DATE 1-19 | APPROVED BY PDK DATE 1-19 | DWG NO. WRC-E-161C | REVISION 1

P:\04233\00\DWG\RECORD\WRCCAD\WRC-E-161C.DWG

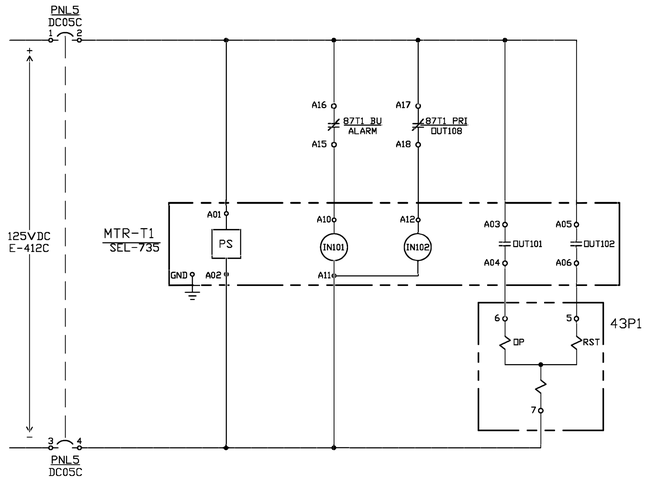

MTR–T1 OUTPUTS		
CONTACT	FUNCTION	DRAWING REFERENCE
A03 / A04 — OUT101	SET 43P1	THIS DRAWING
A05 / A06 — OUT102	RESET 43P1	THIS DRAWING
A07 / A08 / A09 — OUT103	SELF DIAGNOSTIC	WRC-E-161A
D01 / D02 — AO401		
D03 / D04 — AO402		
D05 / D06 — AO403		
D07 / D08 — AO404		
D09 / D10 — OUT401		
D11 / D12 — OUT402		
D13 / D14 — OUT403		
D15 / D16 — OUT404		

MTR–T1 INPUTS		
INPUT	FUNCTION	DRAWING REFERENCE
A11 — IN101 A10 / IN102 A12	87T1 BU SELF DIAGNOSTIC 87T1 PRI SELF DIAGNOSTIC	THIS DRAWING THIS DRAWING

COMMUNICATION PORTS			
PORT	SPEED	FUNCTION	CONNECTION
F	N/A	OPTICAL	–
1	10M	LAN	ETH. SW. #1
2	19200	LOCAL	–
3	N/A	N/A	–
4A	N/A	N/A	–
4B	N/A	N/A	–
4C	N/A	N/A	–

43P1		
CONTACT	FUNCTION	DRAWING REFERENCE
1 / 3 — 2	PHASE A POTENTIAL	WRC-E-111C
12 / 4 — 11	PHASE B POTENTIAL	WRC-E-111C
10 / 8 — 9	PHASE C POTENTIAL	WRC-E-111C

NOTES:
1. ALL WIRING TO BE #12, UNLESS NOTED.
2. MULTI CONDUCTOR CABLE TO BE XHHW-2 WITH CPE JACKET.

LEGEND:
◇ INDICATES TERMINAL POINT

P:\04233\00\DWG\RECORD\WRC\CAD\WRC-E-161D.DWG

DGR ENGINEERING
ROCK RAPIDS, IOWA
(712) 472-2531

DATE	DRAWN BY	NO.	APPROVED BY	REVISION DESCRIPTION
06-20	SMW	1	PDK	CONFORMING TO CONSTRUCTION RECORDS
10-19	SMW	0	PDK	FOR CONSTRUCTION

BLACK HILLS ENERGY

WEST RAPID CITY SUBSTATION

DC SCHEMATIC
XFMR T1 METERING

DRAWN BY SMW DATE 1-19
APPROVED BY PDK DATE 1-19

DWG NO. WRC-E-161D REVISION 1

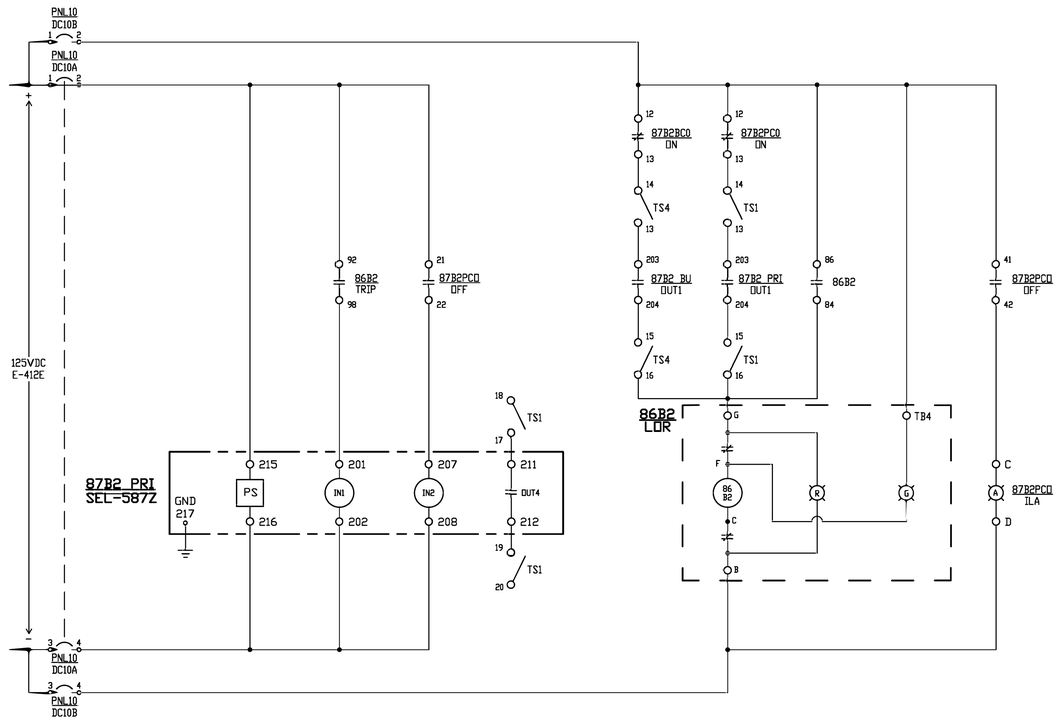

86B2		POSITION			
DECK	CONTACTS	TRIP	RESET	FUNCTION	DRAWING REFERENCE
1	11 — 13		×	BLOCK CLOSE 6WR01	WRC-E-125A
	12 — 18	×		TRIP 6WR01 TC#2	WRC-E-125B
	15 — 17		×	BLOCK CLOSE 6WR10	WRC-E-128A
	16 — 14	×		TRIP 6WR10 TC#2	WRC-E-128B
2	21 — 23		×		
	22 — 28	×			
	25 — 27		×		
	26 — 24	×			
3	31 — 33		×		
	32 — 38	×		TRIP 6WR01 TC#1	WRC-E-125A
	35 — 37		×		
	36 — 34	×		TRIP 6WR10 TC#1	WRC-E-128A
4	41 — 43		×		
	42 — 48	×			
	45 — 47		×		
	46 — 44	×			
5	51 — 53		×		
	52 — 58	×		ØA CURRENT PRI	WRC-E-113
	55 — 57		×		
	56 — 54	×		ØB CURRENT PRI	WRC-E-113
6	61 — 63		×		
	62 — 68	×		ØC CURRENT PRI	WRC-E-113
	65 — 67		×		
	66 — 64	×		BFI TO 21L-LNG69 PRI	WRC-E-166A
7	71 — 73		×		
	72 — 78	×		BFI TO 87L-BF1 BU	WRC-E-168B
	75 — 77		×		
	76 — 74	×			
8	81 — 83		×		
	82 — 88	×		STATUS TO RIO-3	WRC-E-183B
	85 — 87		×		
	86 — 84	×		LOR INDICATING LIGHT	THIS DRAWING
9	91 — 93		×		
	92 — 98	×		STATUS TO 87B2 PRI	THIS DRAWING
	95 — 97		×		
	96 — 94	×		ØA CURRENT BU	WRC-E-113
10	101 — 103		×		
	102 — 108	×		ØB CURRENT BU	WRC-E-113
	105 — 107		×		
	106 — 104	×		ØC CURRENT BU	WRC-E-113

ELECTROSWITCH #78PB10D

87B2 PRI OUTPUTS

CONTACT	FUNCTION	DRAWING REFERENCE
203 — 204 OUT1	TRIP 86B2	THIS DRAWING
205 — 206 OUT2		
209 — 210 OUT3		
211 — 212 OUT4	RELAY TEST	THIS DRAWING
213 — 214 ALARM	SELF DIAGNOSTIC	TO RIO-3 WRC-E-183B

87B2 PRI INPUTS

INPUT	FUNCTION	DRAWING REFERENCE
201 — 202 IN1	86B2 STATUS	THIS DRAWING
207 — 208 IN2	87B2PCO STATUS	THIS DRAWING

COMMUNICATION PORTS

PORT	SPEED	FUNCTION	CONNECTION
F	19200	LOCAL	–
1	19200	SCADA	3555 RTU

87B2PCO		POSITION			
DECK	CONTACTS	ON	OFF	FUNCTION	DRAWING REFERENCE
	A — B				
	C — D			INDICATION	THIS DRAWING
	E — F				
	G — H				
1	11 — 12		×		
	12 — 13	×		86B2 TRIP CKT	THIS DRAWING
	15 — 16		×		
	16 — 17	×			
2	21 — 22		×	STATUS TO 87B2 PRI	THIS DRAWING
	22 — 23	×			
	25 — 26		×	AØ CURRENT	WRC-E-113
	26 — 27	×			
3	31 — 32		×	BØ CURRENT	WRC-E-113
	32 — 33	×			
	35 — 36		×	CØ CURRENT	WRC-E-113
	36 — 37	×			
4	41 — 42		×	INDICATION LIGHT	THIS DRAWING
	42 — 43	×			
	45 — 46		×	STATUS TO RIO-3	WRC-E-183B
	46 — 47	×			

NOTES:
1. ALL WIRING TO BE #12, UNLESS NOTED.
2. MULTI CONDUCTOR CABLE TO BE XHHW-2 WITH CPE JACKET.

LEGEND:
◇ INDICATES TERMINAL POINT

P:\04233000\DWGRECORD\WRCCAD\WRC-E-165A.DWG

DGR ENGINEERING
ROCK RAPIDS, IOWA
(712) 472-2531

DATE	DRAWN BY	NO.	APPROVED BY	REVISION DESCRIPTION
06-20	SMW	1	PDK	CONFORMING TO CONSTRUCTION RECORDS
10-19	SMW	0	PDK	FOR CONSTRUCTION

BLACK HILLS ENERGY

WEST RAPID CITY SUBSTATION

DC SCHEMATIC

69 kV BUS 2 DIFFERENTIAL RELAY

DRAWN BY SMW DATE 1-19
APPROVED BY PDK DATE 1-19

DWG NO. WRC-E-165A REVISION 1

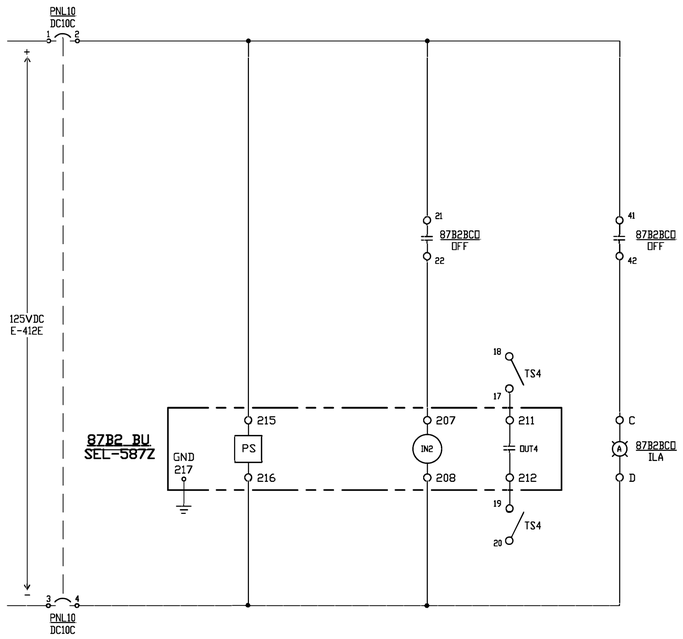

87B2 BU OUTPUTS		
CONTACT	FUNCTION	DRAWING REFERENCE
203 – 204 OUT1	TRIP 86B2	WRC-E-165A
205 – 206 OUT2		
209 – 210 OUT3		
211 – 212 OUT4	RELAY TEST	THIS DRAWING
213 – 214 ALARM	SELF DIAGNOSTIC	WRC-E-169B

87B2 BU INPUTS		
INPUT	FUNCTION	DRAWING REFERENCE
201 – 202 IN1		
207 – 208 IN2	87B2BCO STATUS	THIS DRAWING

COMMUNICATION PORTS			
PORT	SPEED	FUNCTION	CONNECTION
F	19200	LOCAL	–
1	19200	SCADA	3555 RTU

DECK	87B2BCO CONTACTS	POSITION ON	POSITION OFF	FUNCTION	DRAWING REFERENCE
	A – B				
	C – D			INDICATION	THIS DRAWING
	E – F				
	G – H				
1	11 – 12		×		
	12 – 13	×		86B2 TRIP CKT	WRC-E-165A
	15 – 16		×		
	16 – 17	×			
2	21 – 22		×	STATUS TO 87B2 BU	THIS DRAWING
	22 – 23	×			
	25 – 26		×	AØ CURRENT	WRC-E-113
	26 – 27	×			
3	31 – 32		×	BØ CURRENT	WRC-E-113
	32 – 33	×			
	35 – 36		×	CØ CURRENT	WRC-E-113
	36 – 37	×			
4	41 – 42		×	INDICATION LIGHT	THIS DRAWING
	42 – 43	×			
	45 – 46		×	STATUS TO RIO-3	WRC-E-183B
	46 – 47	×			

NOTES:
1. ALL WIRING TO BE #12, UNLESS NOTED.
2. MULTI CONDUCTOR CABLE TO BE XHHW-2 WITH CPE JACKET.

LEGEND:
◇ INDICATES TERMINAL POINT

P:\04223\00\DWG\RECORD\WRC\CAD\WRC-E-165B.DWG

DGR ENGINEERING
ROCK RAPIDS, IOWA
(712) 472-2531

DATE	DRAWN BY	NO.	APPROVED BY	REVISION DESCRIPTION
06-20	SMW	1	PDK	CONFORMING TO CONSTRUCTION RECORDS
10-19	SMW	0	PDK	F.R. CONSTRUCTION

BLACK HILLS ENERGY

WEST RAPID CITY SUBSTATION

DC SCHEMATIC

69 kV BUS 2 DIFFERENTIAL RELAY

DRAWN BY SMW DATE 1-19
APPROVED BY PDK DATE 1-19

DWG NO. WRC-E-165B REVISION 1

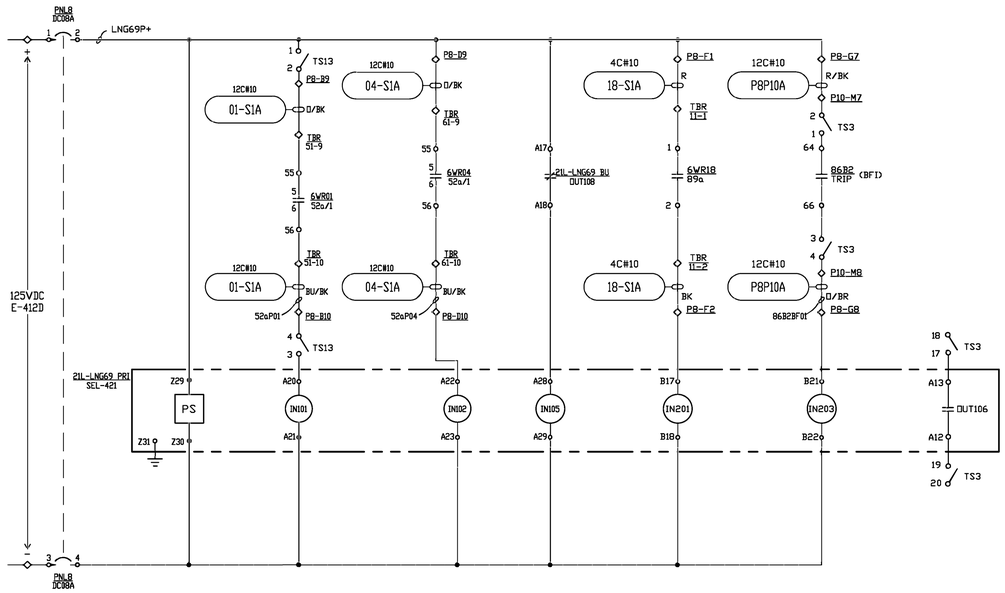

21L-LNG69 PRI OUTPUTS

CONTACT	FUNCTION	DRAWING REFERENCE
A01 / A02 — OUT101	TRIP 6WR01 COIL #1	WRC-E-125A
A03 / A04 — OUT102	TRIP 6WR01 COIL #2	WRC-E-125B
A05 / A06 — OUT103		
A07 / A08 — OUT104	CLOSE 6WR01	WRC-E-125A
A09 / A10 — OUT105	BLOCK CLOSE 6WR01	WRC-E-125A
A12 — A11 / A13 — OUT106	RELAY TEST	THIS DRAWING
A15 — A14 / A16 — OUT107		
A18 — A17 / A19 — OUT108	SELF-DIAGNOSTIC	WRC-E-166B
B05 / B06 — TRIP	MANUAL TRIP 6WR01	WRC-E-125A
B07 / B08 — CLOSE	MANUAL CLOSE 6WR01	WRC-E-125A
B09 / B10 — OUT201	TRIP 6WR04 COIL #1	WRC-E-126A
B11 / B12 — OUT202	TRIP 6WR04 COIL #2	WRC-E-126B
B13 / B14 — OUT203	BLOCK CLOSE 6WR04	WRC-E-126A
B15 / B16 — OUT204		

COMMUNICATION PORTS

PORT	SPEED	FUNCTION	CONNECTION
F	19200	LOCAL	-
1	19200	LOCAL	-
2	N/A	N/A	JMUX
3	N/A	N/A	-
5C	10M	LAN	ETH. SW. #1
5D	10M	LAN	ETH. SW. #2

21L-LNG69 PRI INPUTS

INPUT	FUNCTION	DRAWING REFERENCE
A20 / A21 — IN101	6WR01 52a	THIS DRAWING
A22 / A23 — IN102	6WR04 52a	THIS DRAWING
A24 / A25 — IN103	6WR01 TCM#1	WRC-E-125A
A26 / A27 — IN104	6WR01 TCM#2	WRC-E-125B
A28 / A29 — IN105	21L-LNG69 BU SELF-DIAGNOSTIC	THIS DRAWING
A31 — IN106 / A30 / A32 — IN107		
B01 / B02 — CLOSE	6WR01 CLOSE IND	WRC-E-125A
B03 / B04 — OPEN	6WR01 OPEN IND	WRC-E-125A
B17 / B18 — IN201	6WR18 89a	THIS DRAWING
B19 / B20 — IN202		
B21 / B22 — IN203	STATUS 86B2 (BF1 6WR01)	THIS DRAWING
B320 / B23 — IN204		
B24 — IN205		
B25 — IN206		
B26 — IN207		
B27 — IN208		
B28 — IN209		
B29 — IN210		
B30 — IN211		
B31 — IN212		

21L-LNG69 PRI INPUTS

INPUT	FUNCTION	DRAWING REFERENCE
B33 / B34 — IN213		
B35 / B36 — IN214		
B37 / B38 — IN215		
B48 / B39 — IN216		
B40 — IN217		
B41 — IN218		
B42 — IN219		
B43 — IN220		
B44 — IN221		
B45 — IN222		
B46 — IN223		
B47 — IN224		

P:\04023\00\DWG\RECORD\WRC\CAD\WRC-E-166A.DWG

DGR ENGINEERING
ROCK RAPIDS, IOWA
(712) 472-2531

DATE	DRAWN BY	NO.	APPROVED BY	REVISION DESCRIPTION
06-20	SMW	1	PDK	CONFORMING TO CONSTRUCTION RECORDS
10-19	SMW	0	PDK	FOR CONSTRUCTION

BLACK HILLS ENERGY

WEST RAPID CITY SUBSTATION
DC SCHEMATIC
69 kV LANGE #69 PRI RELAY

DRAWN BY SMW DATE 1-19
APPROVED BY PDK DATE 1-19

DWG NO. WRC-E-166A REVISION 1

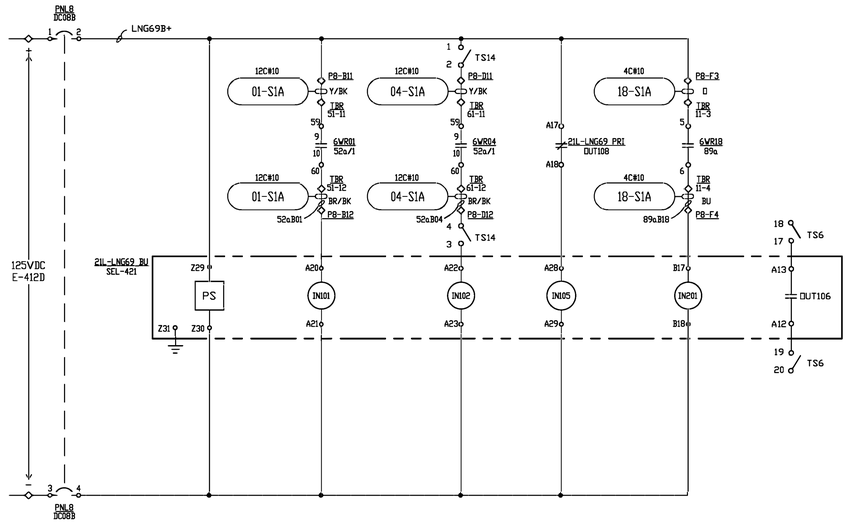

21L–LNG69 BU OUTPUTS

CONTACT	FUNCTION	DRAWING REFERENCE
A01 + A02 OUT101	TRIP 6WR04 COIL #1	WRC-E-126A
A03 + A04 OUT102	TRIP 6WR04 COIL #2	WRC-E-126B
A05 + A06 OUT103		
A07 A08 OUT104	CLOSE 6WR04	WRC-E-126A
A09 A10 OUT105	BLOCK CLOSE 6WR04	WRC-E-126A
A12 A11 A13 OUT106	RELAY TEST	THIS DRAWING
A15 A14 A16 OUT107		
A18 A17 A19 OUT108	SELF-DIAGNOSTIC	WRC-E-166A
B05 + B06 TRIP	MANUAL TRIP 6WR04	WRC-E-126A
B07 + B08 CLOSE	MANUAL CLOSE 6WR04	WRC-E-126A
B09 + B10 OUT201	TRIP 6WR01 COIL #1	WRC-E-125A
B11 + B12 OUT202	TRIP 6WR01 COIL #2	WRC-E-125B
B13 + B14 OUT203	BLOCK CLOSE 6WR01	WRC-E-125A
B15 + B16 OUT204		

21L–LNG69 BU INPUTS

INPUT	FUNCTION	DRAWING REFERENCE
A20 A21 IN101	6WR01 52a	THIS DRAWING
A22 A23 IN102	6WR04 52a	THIS DRAWING
A24 A25 IN103	6WR04 TCM#1	WRC-E-126A
A26 A27 IN104	6WR04 TCM#2	WRC-E-126B
A28 A29 IN105	21L-LNG69 PRI SELF-DIAGNOSTIC	THIS DRAWING
A31 IN106 A30 A32 IN107		
B01 + B02 CLOSE	6WR04 CLOSE IND	WRC-E-126A
B03 + B04 OPEN	6WR04 OPEN IND	WRC-E-126A
B17 B18 IN201	6WR18 89a	THIS DRAWING
B19 B20 IN202		
B21 B22 IN203		
B320 B23 IN204		
B24 IN205		
B25 IN206		
B26 IN207		
B27 IN208		
B28 IN209		
B29 IN210		
B30 IN211		
B31 IN212		

21L–LNG69 BU INPUTS

INPUT	FUNCTION	DRAWING REFERENCE
B33 B34 IN213		
B35 B36 IN214		
B37 B38 IN215		
B480 B39 IN216		
B40 IN217		
B41 IN218		
B42 IN219		
B43 IN220		
B44 IN221		
B45 IN222		
B46 IN223		
B47 IN224		

COMMUNICATION PORTS

PORT	SPEED	FUNCTION	CONNECTION
F	19200	LOCAL	–
1	19200	LOCAL	–
2	N/A	N/A	–
3	N/A	N/A	–
5C	10M	LAN	ETH. SW. #1
5D	10M	LAN	ETH. SW. #2

P:\042333\00\DWG\RECORD\WRC\CAD\WRC-E-166B.DWG

DGR ENGINEERING
ROCK RAPIDS, IOWA
(712) 472-2531

DATE	DRAWN BY	NO.	APPROVED BY	REVISION DESCRIPTION
06-20	SMW	1	PDK	CONFORMING TO CONSTRUCTION RECORDS
10-19	SMW	0	PDK	FOR CONSTRUCTION

BLACK HILLS ENERGY

WEST RAPID CITY SUBSTATION
DC SCHEMATIC
69 kV LANGE #69 BU RELAY

DRAWN BY SMW DATE 1-19
APPROVED BY PDK DATE 1-19

DWG NO. WRC-E-166B REVISION NO. 1

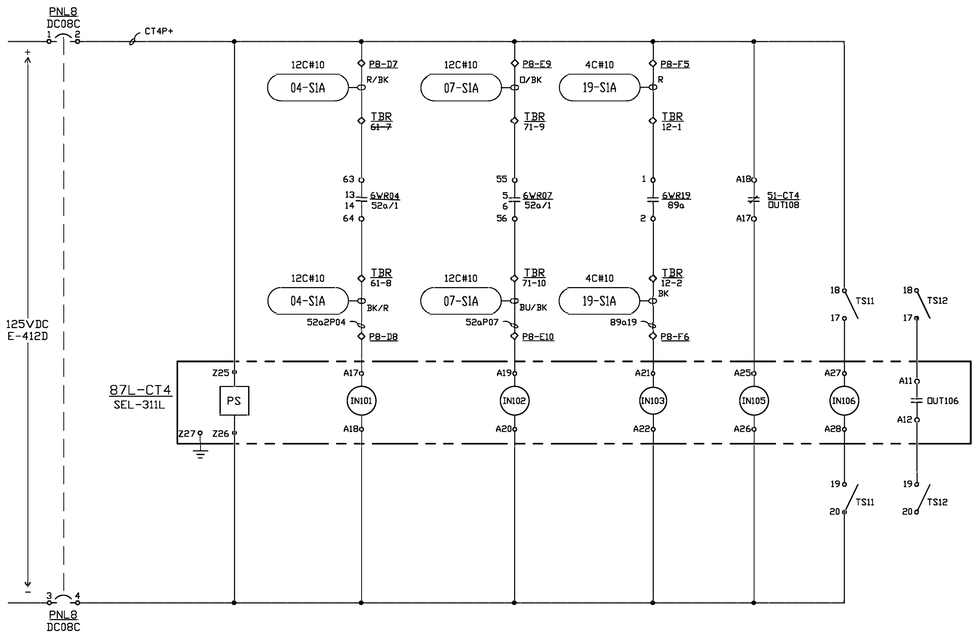

87L-CT4 OUTPUTS

CONTACT	FUNCTION	DRAWING REFERENCE
A01 — A02 OUT101	TRIP 6WR07 TC #1	WRC-E-127A
A03 — A04 OUT102	TRIP 6WR07 TC #2	WRC-E-127B
A05 — A06 OUT103		
A07 — A08 OUT104		
A09 — A10 OUT105	BLOCK CLOSE 6WR07	WRC-E-127A
A11 — A12 OUT106	RELAY TEST	THIS DRAWING
A13 — A14 OUT107		
A15 — A16 ALARM	SELF-DIAGNOSTIC	WRC-E-167B
B01 — B02 OUT201	TRIP 6WR04 TC #1	WRC-E-126A
B04 — B05 OUT202	TRIP 6WR04 TC #2	WRC-E-126B
B07 — B08 OUT203		
B09 — B10 OUT204		
B12 — B13 OUT205		
B15 — B16 OUT206		

87L-CT4 INPUTS

INPUT	FUNCTION	DRAWING REFERENCE
A17 — A18 IN101	6WR04 52a	THIS DRAWING
A19 — A20 IN102	6WR07 52a	THIS DRAWING
A21 — A22 IN103	6WR19 89a	THIS DRAWING
A23 — A24 IN104		
A25 — A26 IN105	51-CT4 SELF-DIAGNOSTIC	THIS DRAWING
A27 — A28 IN106	LINE DIFF CUTOUT	THIS DRAWING

COMMUNICATION PORTS

PORT	SPEED	FUNCTION	CONNECTION
F	19200	LOCAL	-
1	N/A	N/A	-
2	N/A	N/A	-
3	N/A	N/A	-
5	10M	LAN	ETH. SW. #1
6	10M	LAN	ETH. SW. #2
CH.1	N/A	LINE COMM	MUX-NX64F
CH.2	N/A	LINE COMM	MUX-NX64F

NOTES:
1. ALL WIRING TO BE #12, UNLESS NOTED.
2. MULTI CONDUCTOR CABLE TO BE XHHW-2 WITH CPE JACKET.

LEGEND:
◇ INDICATES TERMINAL POINT

P:\04233\00\DWG\RECORD\WRC\CAD\WRC-E-167A.DWG

DGR ENGINEERING
ROCK RAPIDS, IOWA
(712) 472-2531

DATE	DRAWN BY	NO.	APPROVED BY	REVISION DESCRIPTION
06-20	SMW	1	PDK	CONFORMING TO CONSTRUCTION RECORDS
10-19	SMW	0	PDK	FOR CONSTRUCTION

BLACK HILLS ENERGY
WEST RAPID CITY SUBSTATION
DC SCHEMATIC
69 kV RAPID CITY CT #4 PRI RELAY

DRAWN BY SMW DATE 1-19
APPROVED BY PDK DATE 1-19
DWG NO. WRC-E-167A
SECTION 1 NO.

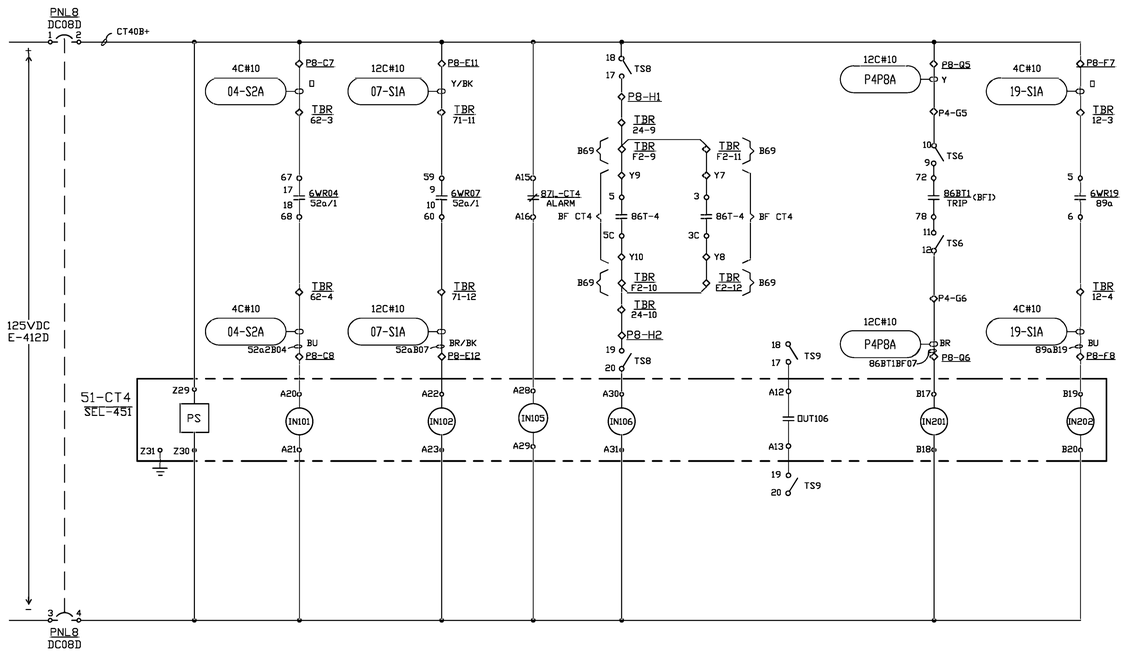

51-CT4 OUTPUTS

CONTACT	FUNCTION	DRAWING REFERENCE
A01 + A02 OUT101	TRIP 6WR07 TC #1	WRC-E-127A
A03 + A04 OUT102	TRIP 6WR07 TC #2	WRC-E-127B
A05 + A06 OUT103	TRIP 6WR04 TC #1	WRC-E-126A
A07 + A08 OUT104	TRIP 6WR04 TC #2	WRC-E-126B
A09 A10 OUT105		
A12 A11 A13 OUT106	RELAY TEST	THIS DRAWING
A15 A14 A16 OUT107		
A18 A17 A19 OUT108	SELF DIAGNOSTIC	WRC-E-167A
B05 + B06 TRIP	MANUAL TRIP 6WR07	WRC-E-127A
B07 + B08 CLOSE	MANUAL CLOSE 6WR07	WRC-E-127A
B09 + B10 OUT201		
B11 + B12 OUT202		
B13 + B14 OUT203	CLOSE 6WR07	WRC-E-127A
B15 + B16 OUT204	BLOCK CLOSE 6WR07	WRC-E-127A

51-CT4 INPUTS

INPUT	FUNCTION	DRAWING REFERENCE
A20 A21 IN101	6WR04 52a	THIS DRAWING
A22 A23 IN102	6WR07 52a	THIS DRAWING
A24 A25 IN103	6WR07 TCM #1	WRC-E-127A
A26 A27 IN104	6WR07 TCM #2	WRC-E-127B
A28 A29 IN105	87L-CT4 SELF-DIAGNOSTIC	THIS DRAWING
IN106 A30 A32 IN107 A31	BFI FROM 86T-4 (BEN FRENCH)	THIS DRAWING
B01 CLOSE B02	6WR07 CLOSE INDICATION	WRC-E-127A
B03 + B04 OPEN	6WR07 OPEN INDICATION	WRC-E-127A
B17 B18 IN201	STATUS 86BT1 (BFI 6WR07)	THIS DRAWING
B19 B20 IN202	6WR19 89a	THIS DRAWING
B21 B22 IN203		
B23 B24 IN204		
B25 IN205		
B26 IN206		
B27 IN207		
B28 IN208		
B29 IN209		
B30 IN210		
B31 IN211		
B32 IN212		

51-CT4 INPUTS

INPUT	FUNCTION	DRAWING REFERENCE
B33 B34 IN213		
B35 B36 IN214		
B37 B38 IN215		
B48 B39 IN216		
B40 IN217		
B41 IN218		
B42 IN219		
B43 IN220		
B44 IN221		
B45 IN222		
B46 IN223		
B47 IN224		

COMMUNICATION PORTS

PORT	SPEED	FUNCTION	CONNECTION
F	19200	LOCAL	-
1	19200	LOCAL	-
2	N/A	N/A	-
3	N/A	N/A	-
5C	10M	LAN	ETH. SW. #1
5D	10M	LAN	ETH. SW. #2

NOTES:
1. ALL WIRING TO BE #12, UNLESS NOTED.
2. MULTI CONDUCTOR CABLE TO BE XHHW-2 WITH CPE JACKET.

LEGEND:
◇ INDICATES TERMINAL POINT

P:\04\233\00\DWG\RECORD\WRC\CAD\WRC-E-167B.DWG

DGR ENGINEERING
ROCK RAPIDS, IOWA
(712) 472-2531

DATE	DRAWN BY	NO.	APPROVED BY	REVISION DESCRIPTION
06-20	SMW	1	PDK	CONFORMING TO CONSTRUCTION RECORDS
10-19	SMW	0	PDK	FOR CONSTRUCTION

BLACK HILLS ENERGY

WEST RAPID CITY SUBSTATION
DC SCHEMATIC
69 kV RAPID CITY CT #4 BU RELAY

DRAWN BY SMW DATE 1-19
APPROVED BY PDK DATE 1-19
DWG NO. WRC-E-167B REVISED 1

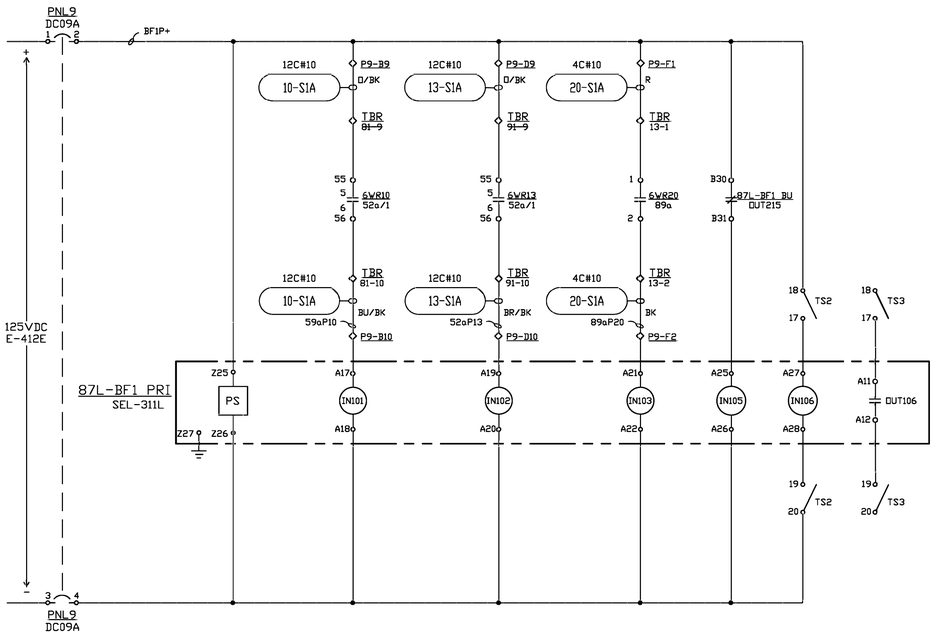

87L-BF1 PRI OUTPUTS

CONTACT	FUNCTION	DRAWING REFERENCE
A01 – A02 OUT101	TRIP 6WR10 TC #1	WRC-E-128A
A03 – A04 OUT102	TRIP 6WR10 TC #2	WRC-E-128B
A05 – A06 OUT103		
A07 – A08 OUT104		
A09 – A10 OUT105	BLOCK CLOSE 6WR10	WRC-E-128A
A11 – A12 OUT106	RELAY TEST	THIS DRAWING
A13 – A14 OUT107		
A15 – A16 ALARM	SELF-DIAGNOSTIC	WRC-E-168B
B01 – B02 OUT201	TRIP 6WR13 TC #1	WRC-E-129A
B04 – B05 OUT202	TRIP 6WR13 TC #2	WRC-E-129B
B07 – B08 OUT203		
B09 – B10 OUT204		
B12 – B13 OUT205		
B15 – B16 OUT206		

87L-BF1 PRI INPUTS

INPUT	FUNCTION	DRAWING REFERENCE
A17 – A18 IN101	6WR10 52a	THIS DRAWING
A19 – A20 IN102	6WR13 52a	THIS DRAWING
A21 – A22 IN103	6WR20 89a	THIS DRAWING
A23 – A24 IN104		
A25 – A26 IN105	87L-BF1 BU SELF-DIAGNOSTIC	THIS DRAWING
A27 – A28 IN106	LINE DIFF CUTOUT	THIS DRAWING

COMMUNICATION PORTS

PORT	SPEED	FUNCTION	CONNECTION
F	19200	LOCAL	-
1	N/A	N/A	-
2	N/A	N/A	-
3	N/A	N/A	-
5	10M	LAN	ETH. SW. #1
6	10M	LAN	ETH. SW. #2
CH.1	N/A	LINE COMM	MUX-NX64F
CH.2	N/A	LINE COMM	MUX-NX64F

NOTES:
1. ALL WIRING TO BE #12, UNLESS NOTED.
2. MULTI CONDUCTOR CABLE TO BE XHHW-2 WITH CPE JACKET.

LEGEND:
◇ INDICATES TERMINAL POINT

P:\04233\00\DWG\RECORD\WRC\CAD\WRC-E-168A.DWG

DGR ENGINEERING
ROCK RAPIDS, IOWA
(712) 472-2531

DATE	DRAWN BY	NO.	APPROVED BY	REVISION DESCRIPTION
06-20	SMW	1	PDK	CONFORMING TO CONSTRUCTION RECORDS
10-19	SMW	0	PDK	FOR CONSTRUCTION

BLACK HILLS ENERGY
WEST RAPID CITY SUBSTATION
DC SCHEMATIC
69 kV BEN FRENCH #1 PRI RELAY

DRAWN BY SMW DATE 1-19 | DWG NO. WRC-E-168A | REVISION NO. 1
APPROVED BY PDK DATE 1-19

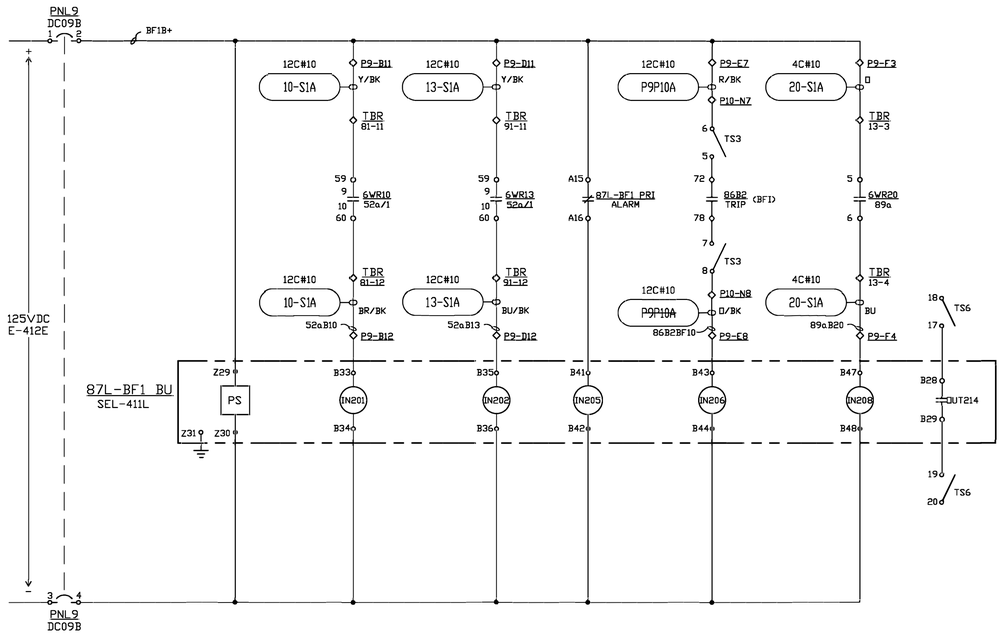

87L–BF1 BU OUTPUTS

CONTACT	FUNCTION	DRAWING REFERENCE
B01 + B02 OUT201	TRIP 6WR10 TC #1	WRC-E-128A
B03 + B04 OUT202	TRIP 6WR10 TC #2	WRC-E-128B
B05 + B06 OUT203		
B07 + B08 OUT204	CLOSE 6WR10	WRC-E-128A
B09 + B10 OUT205	BLOCK CLOSE 6WR10	WRC-E-128A
B11 + B12 OUT206	TRIP 6WR13 TC #1	WRC-E-129A
B13 + B14 OUT207	TRIP 6WR13 TC #2	WRC-E-129B
B15 + B16 OUT208		
B17 + B18 OUT209		
B19 + B20 OUT210		
B21 + B22 OUT211		
B23 + B24 OUT212		
B25 + B26 OUT213		
B28 B27 B29 OUT214	RELAY TEST	THIS DRAWING
B31 B30 B32 OUT215	SELF-DIAGNOSTIC	WRC-E-168A

87L–BF1 BU INPUTS

INPUT	FUNCTION	DRAWING REFERENCE
B33 B34 IN201	6WR10 52a	THIS DRAWING
B35 B36 IN202	6WR13 52a	THIS DRAWING
B37 B38 IN203	6WR10 TCM#1	WRC-E-128A
B39 B40 IN204	6WR10 TCM#2	WRC-E-128B
B41 B42 IN205	87L-BF1 PRI SELF-DIAGNOSTIC	THIS DRAWING
B43 B44 IN206	86B2 STATUS (6WR10 BFI)	THIS DRAWING
B45 B46 IN207		
B47 B48 IN208	6WR20 89a	THIS DRAWING

COMMUNICATION PORTS

PORT	SPEED	FUNCTION	CONNECTION
F	19200	LOCAL	–
1	19200	LOCAL	–
2	N/A	N/A	–
3	N/A	N/A	–
5A	10M	N/A	–
5B	10M	N/A	–
5C	10M	LAN	ETH. SW. #2
5D	10M	LAN	ETH. SW. #4
CH.1	N/A	LINE COMM	MUX-NX64F
CH.2	N/A	LINE COMM	MUX-NX64F

NOTES:
1. ALL WIRING TO BE #12, UNLESS NOTED.
2. MULTI CONDUCTOR CABLE TO BE XHHW-2 WITH CPE JACKET.

LEGEND:
◇ INDICATES TERMINAL POINT

DGR ENGINEERING
ROCK RAPIDS, IOWA
(712) 472-2531

DATE	DRAWN BY	NO.	APPROVED BY	REVISION DESCRIPTION
06-20	SMW	1	PDK	CONFORMING TO CONSTRUCTION RECORDS
10-19	SMW	0	PDK	FOR CONSTRUCTION

BLACK HILLS ENERGY

WEST RAPID CITY SUBSTATION
DC SCHEMATIC
69 kV BEN FRENCH #1 BU RELAY

DRAWN BY SMW DATE 1-19
APPROVED BY PDK DATE 1-19
DWG NO. WRC-E-168B REVISION 1

P:\04023\00\DWG\RECORD\WRC\CAD\WRC-E-168B.DWG

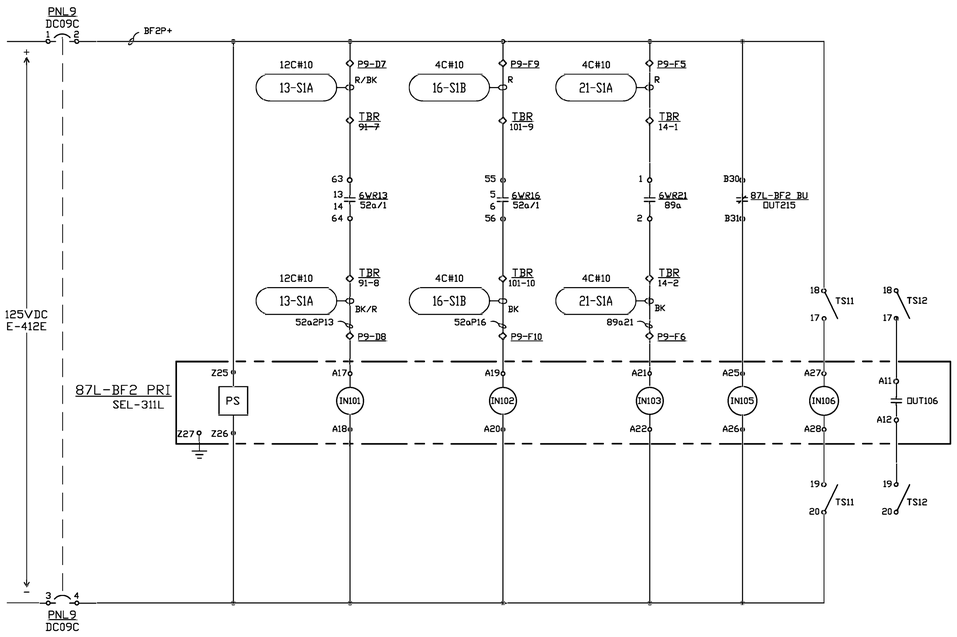

87L-BF2 PRI OUTPUTS		
CONTACT	FUNCTION	DRAWING REFERENCE
A01 — A02 OUT101	TRIP 6WR13 TC #1	WRC-E-129A
A03 — A04 OUT102	TRIP 6WR13 TC #2	WRC-E-129B
A05 — A06 OUT103		
A07 — A08 OUT104		
A09 — A10 OUT105	BLOCK CLOSE 6WR13	WRC-E-129A
A11 — A12 OUT106	RELAY TEST	THIS DRAWING
A13 — A14 OUT107		
A15 — A16 ALARM	SELF-DIAGNOSTIC	WRC-E-169B
B01 — B02 OUT201	TRIP 6WR16 TC #1	WRC-E-130A
B04 — B05 OUT202	TRIP 6WR16 TC #2	WRC-E-130B
B07 — B08 OUT203		
B09 — B10 OUT204		
B12 — B13 OUT205		
B15 — B16 OUT206		

87L-BF2 PRI INPUTS		
INPUT	FUNCTION	DRAWING REFERENCE
A17 — A18 IN101	6WR13 52a	THIS DRAWING
A19 — A20 IN102	6WR16 52a	THIS DRAWING
A21 — A22 IN103	6WR21 89a	THIS DRAWING
A23 — A24 IN104		
A25 — A26 IN105	87L-BF2 BU SELF-DIAGNOSTIC	THIS DRAWING
A27 — A28 IN106	LINE DIFF CUTOUT	THIS DRAWING

COMMUNICATION PORTS			
PORT	SPEED	FUNCTION	CONNECTION
F	19200	LOCAL	-
1	N/A	N/A	-
2	N/A	N/A	-
3	N/A	N/A	-
5	10M	LAN	ETH. SW. #1
6	10M	LAN	ETH. SW. #2
CH.1	N/A	LINE COMM	MUX-NX64F
CH.2	N/A	LINE COMM	MUX-NX64F

NOTES:
1. ALL WIRING TO BE #12, UNLESS NOTED.
2. MULTI CONDUCTOR CABLE TO BE XHHW-2 WITH CPE JACKET.

LEGEND:
◇ INDICATES TERMINAL POINT

P:\04233\00\DWG\RECORD\WRC\CAD\WRC-E-169A.DWG

DGR ENGINEERING
ROCK RAPIDS, IOWA
(712) 472-2531

DATE	DRAWN BY	NO.	APPROVED BY	REVISION DESCRIPTION
06-20	SMW	1	PDK	CONFORMING TO CONSTRUCTION RECORDS
10-19	SMW	0	PDK	FOR CONSTRUCTION

BLACK HILLS ENERGY
WEST RAPID CITY SUBSTATION
DC SCHEMATIC
69 kV BEN FRENCH #2 PRI RELAY

DRAWN BY SMW DATE 1-19
APPROVED BY PDK DATE 1-19
DWG NO. WRC-E-169A REVISION 1

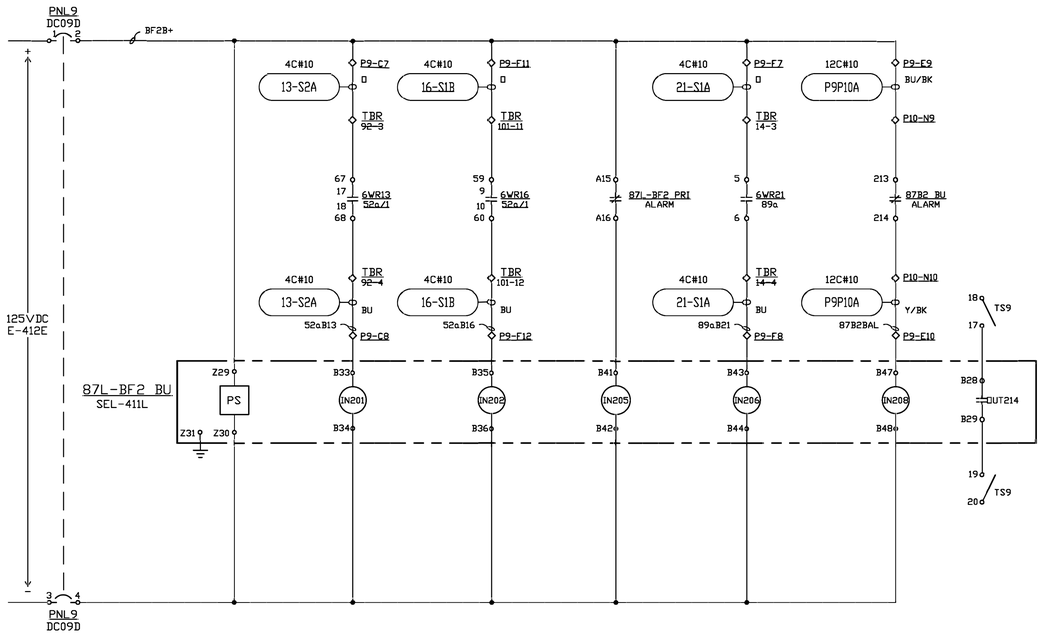

87L-BF2 BU OUTPUTS

CONTACT	FUNCTION	DRAWING REFERENCE
B01 — B02 (OUT201)	TRIP 6WR13 TC #1	WRC-E-129A
B03 — B04 (OUT202)	TRIP 6WR13 TC #2	WRC-E-129B
B05 — B06 (OUT203)		
B07 — B08 (OUT204)	CLOSE 6WR13	WRC-E-129A
B09 — B10 (OUT205)	BLOCK CLOSE 6WR13	WRC-E-129A
B11 — B12 (OUT206)	TRIP 6WR16 TC #1	WRC-E-130A
B13 — B14 (OUT207)	TRIP 6WR16 TC #2	WRC-E-130B
B15 — B16 (OUT208)		
B17 — B18 (OUT209)	BLOCK CLOSE 6WR16	WRC-E-130A
B19 — B20 (OUT210)		
B21 — B22 (OUT211)		
B23 — B24 (OUT212)		
B25 — B26 (OUT213)		
B28 — B27 / B29 (OUT214)	RELAY TEST	THIS DRAWING
B31 — B30 / B32 (OUT215)	SELF-DIAGNOSTIC	WRC-E-169A

87L-BF2 BU INPUTS

INPUT	FUNCTION	DRAWING REFERENCE
B33 — B34 (IN201)	6WR13 52a	THIS DRAWING
B35 — B36 (IN202)	6WR16 52a	THIS DRAWING
B37 — B38 (IN203)	6WR13 TCM#1	WRC-E-129A
B39 — B40 (IN204)	6WR13 TCM#2	WRC-E-129B
B41 — B42 (IN205)	87L-BF2 PRI SELF-DIAGNOSTIC	THIS DRAWING
B43 — B44 (IN206)	6WR21 89a	THIS DRAWING
B45 — B46 (IN207)		
B47 — B48 (IN208)	87B2 BU SELF-DIAGNOSTIC	THIS DRAWING

COMMUNICATION PORTS

PORT	SPEED	FUNCTION	CONNECTION
F	19200	LOCAL	-
1	19200	LOCAL	-
2	N/A	N/A	-
3	N/A	N/A	-
5A	10M	N/A	-
5B	10M	N/A	-
5C	10M	LAN	ETH. SW. #2
5D	10M	LAN	ETH. SW. #4
CH.1	N/A	LINE COMM	MUX-NX64F
CH.2	N/A	LINE COMM	MUX-NX64F

NOTES:
1. ALL WIRING TO BE #12, UNLESS NOTED.
2. MULTI CONDUCTOR CABLE TO BE XHHW-2 WITH CPE JACKET.

LEGEND:
◇ INDICATES TERMINAL POINT

P:\04023100\DWG\RECORD\WRC\CAD\WRC-E-169B.DWG

DGR ENGINEERING
ROCK RAPIDS, IOWA
(712) 472-2531

DATE	DRAWN BY	NO.	APPROVED BY	REVISION DESCRIPTION
06-20	SMW	1	PDK	CONFORMING TO CONSTRUCTION RECORDS
10-19	SMW	0	PDK	FOR CONSTRUCTION

BLACK HILLS ENERGY

WEST RAPID CITY SUBSTATION
DC SCHEMATIC
69 kV BEN FRENCH #2 BU RELAY

DRAWN BY: SMW DATE: 1-19
APPROVED BY: PDK DATE: 1-19
DWG NO. WRC-E-169B REVISION 1

RIO-1 INPUTS

INPUT	FUNCTION	DRAWING REFERENCE
IN101 (A11 – A10 / A12) IN102		
C01 – C02 IN301	RIO-3 SELF DIAGNOSTIC	THIS DWG
C03 – C04 IN302	23464 LOW GAS	THIS DWG
C05 – C06 IN303	23464 LOW GAS LOCKOUT	THIS DWG
C07 – C08 IN304	23464 MOTOR TROUBLE	THIS DWG
C09 – C10 IN305	23464 LOSS OF CLOSE DC	THIS DWG
C11 – C12 IN306	23464 TANK HTR TROUBLE	THIS DWG
C13 – C14 IN307	SPARE	THIS DWG
C15 – C16 IN308	23467 LOW GAS	WRC-E-181B
D01 – D02 IN401	23467 LOW GAS LOCKOUT	WRC-E-181B
D03 – D04 IN402	23467 MOTOR TROUBLE	WRC-E-181B
D05 – D06 IN403	23467 LOSS OF CLOSE DC	WRC-E-181B
D07 – D08 IN404	23467 TANK HTR TROUBLE	WRC-E-181B
D09 – D10 IN405	23470 LOW GAS	WRC-E-181B
D11 – D12 IN406	23470 LOW GAS LOCKOUT	WRC-E-181B
D13 – D14 IN407	23470 MOTOR TROUBLE	WRC-E-181B
D15 – D16 IN408	23470 LOSS OF CLOSE DC	WRC-E-181B
E01 – E02 IN501	23470 TANK HTR TROUBLE	WRC-E-181B
E03 – E04 IN502	6WR01 LOW GAS	WRC-E-181B
E05 – E06 IN503	6WR01 LOW GAS LOCKOUT	WRC-E-181B
E07 – E08 IN504	6WR01 MOTOR TROUBLE	WRC-E-181B
E09 – E10 IN505	6WR01 LOSS OF CLOSE DC	WRC-E-181B
E11 – E12 IN506	6WR01 TANK HTR TROUBLE	WRC-E-181B
E13 – E14 IN507	6WR04 LOW GAS	WRC-E-181B
E15 – E16 IN508	6WR04 LOW GAS LOCKOUT	WRC-E-181B
Z01 – Z02 IN601	6WR04 MOTOR TROUBLE	WRC-E-181B
Z03 – Z04 IN602	6WR04 LOSS OF CLOSE DC	WRC-E-181B
Z05 – Z06 IN603	6WR04 TANK HTR TROUBLE	WRC-E-181B
Z07 – Z08 IN604	6WR07 LOW GAS	WRC-E-181B
Z09 – Z10 IN605	6WR07 LOW GAS LOCKOUT	WRC-E-181B
Z11 – Z12 IN606	6WR07 MOTOR TROUBLE	WRC-E-181B
Z13 – Z14 IN607	6WR07 LOSS OF CLOSE DC	WRC-E-181B
Z15 – Z16 IN608	6WR07 TANK HTR TROUBLE	WRC-E-181B

RIO-1 OUTPUTS

CONTACT	FUNCTION	DRAWING REFERENCE
A03 – A04 OUT101		
A05 – A06 OUT102		
A07 – A08 / A09 OUT103	SELF DIAGNOSTIC	WRC-E-182A

COMMUNICATION PORTS

PORT	SPEED	FUNCTION	CONNECTION
F	19200	LOCAL	–
1	10M	LAN	ETH. SW. #2
2	N/A	N/A	–
3	19200	LOCAL	–

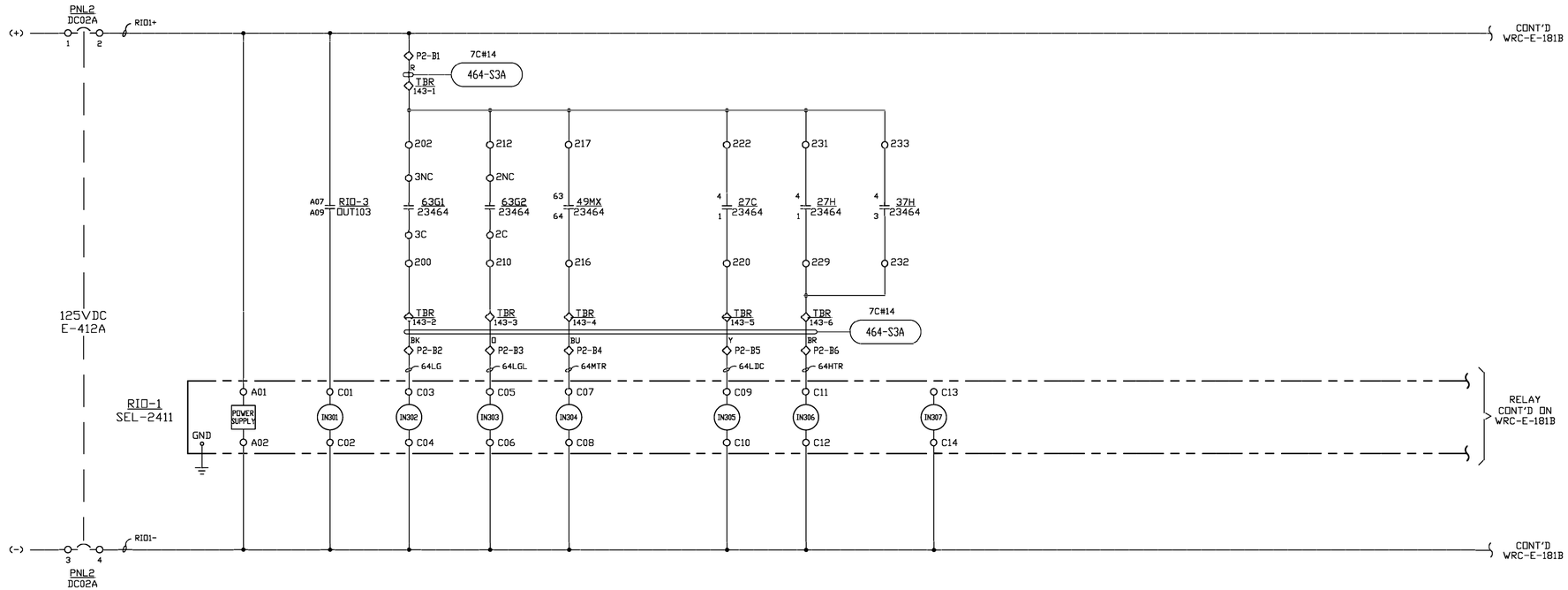

NOTES:
1. ALL ANNUNCIATOR WIRING TO BE #16, UNLESS NOTED.
2. MULTI CONDUCTOR CABLE TO BE XHHW-2 WITH CPE JACKET.
3. ALL CONTACTS ARE SHOWN IN THE NON-ALARM STATE

LEGEND:
◇ INDICATES TERMINAL POINT

DATE	DRAWN BY	NO.	APPROVED BY	REVISION DESCRIPTION
06-20	SMW	1	PDK	CONFORMING TO CONSTRUCTION RECORDS
10-19	SMW	0	PDK	FOR CONSTRUCTION

BLACK HILLS ENERGY

WEST RAPID CITY SUBSTATION
DC SCHEMATIC
ALARM PROCESSOR #1

DRAWN BY SMW DATE 1-19
APPROVED BY PDK DATE 1-19
DWG NO. WRC-E-181A REVISION 1

DGR ENGINEERING
ROCK RAPIDS, IOWA
(712) 472-2531

P:\042319\DWG\RECORD\WRC\CAD\WRC-E-181A.DWG

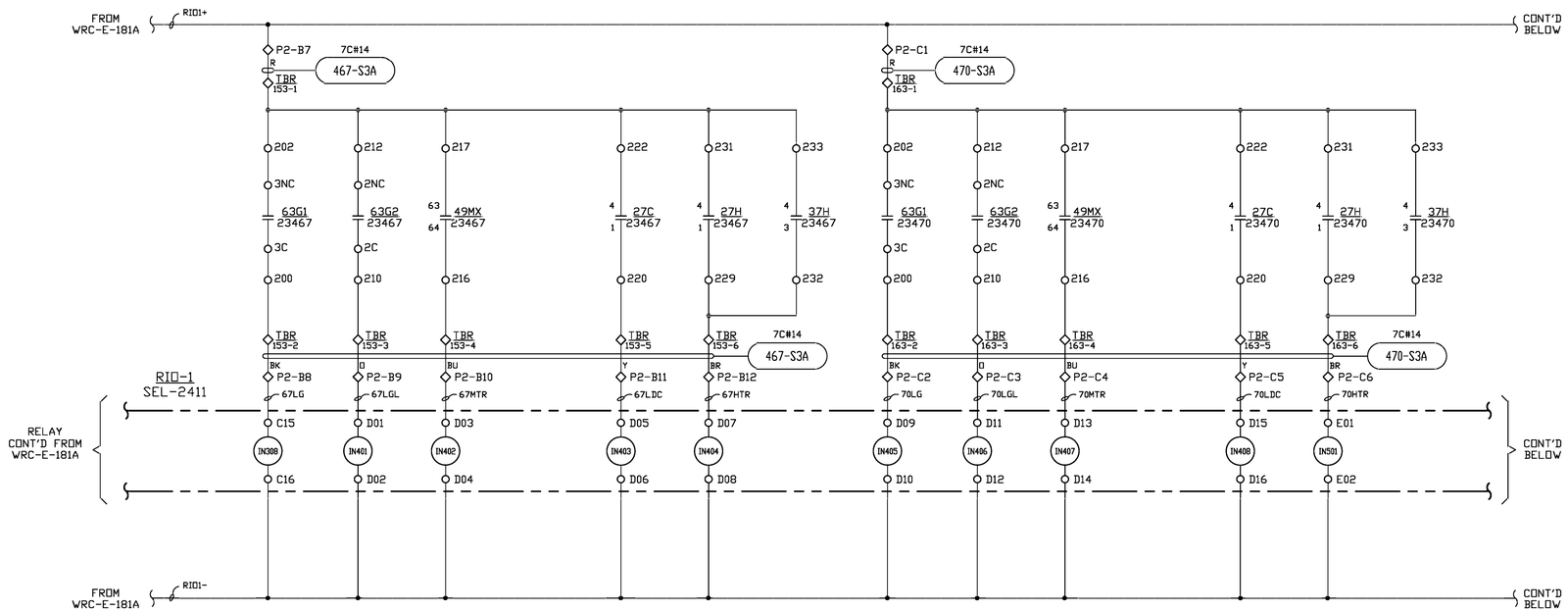

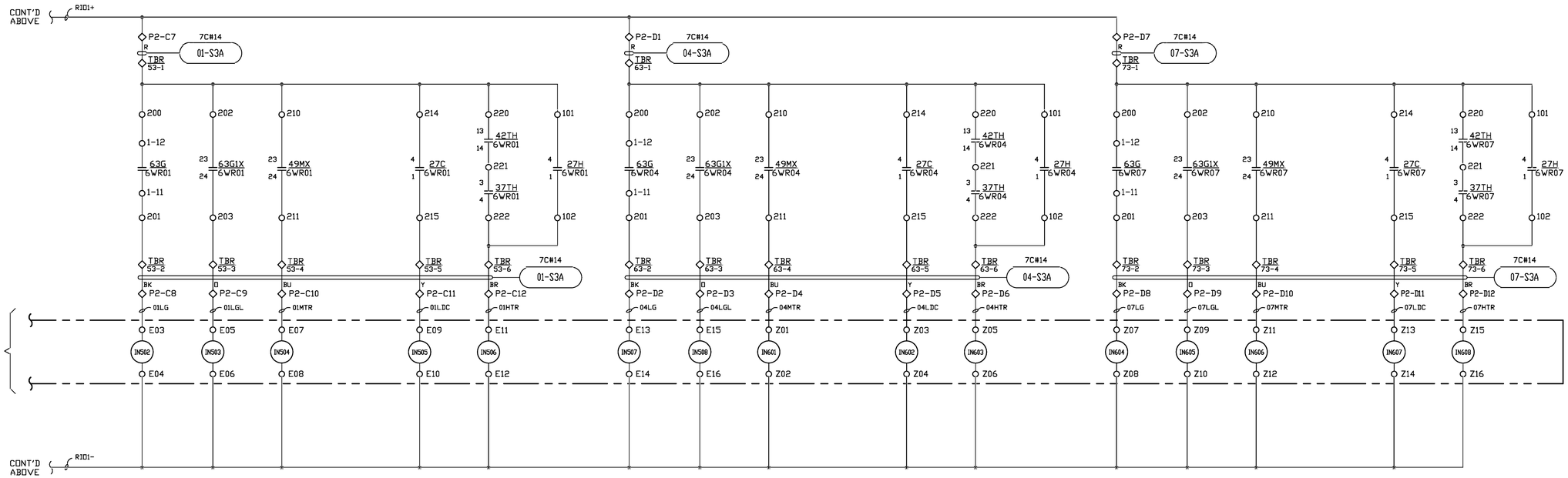

P:\0#233\00\DWG\RECORD\WRC\CAD\WRC-E-181B.DWG

NOTES:
1. ALL ANNUNCIATOR WIRING TO BE #16, UNLESS NOTED.
2. MULTI CONDUCTOR CABLE TO BE XHHW-2 WITH CPE JACKET.
3. ALL CONTACTS ARE SHOWN IN THE NON-ALARM STATE

LEGEND:
◇ INDICATES TERMINAL POINT

DATE	DRAWN BY	NO.	APPROVED BY	REVISION DESCRIPTION
06-20	SMW	1	PDK	CONFORMING TO CONSTRUCTION RECORDS
10-19	SMW	0	PDK	FOR CONSTRUCTION

DGR ENGINEERING
ROCK RAPIDS, IOWA
(712) 472-2531

BLACK HILLS ENERGY

WEST RAPID CITY SUBSTATION
DC SCHEMATIC
ALARM PROCESSOR #1

DRAWN BY SMW DATE 1-19 | DWG NO. WRC-E-181B | REVISION 1
APPROVED BY PDK DATE 1-19

RIO-2 INPUTS

INPUT	FUNCTION	DRAWING REFERENCE
IN101 A10 / A11 / A12 IN102		
C01 C02 IN301	RIO-1 SELF DIAGNOSTIC	THIS DWG
C03 C04 IN302	6WR10 LOW GAS	THIS DWG
C05 C06 IN303	6WR10 LOW GAS LOCKOUT	THIS DWG
C07 C08 IN304	6WR10 MOTOR TROUBLE	THIS DWG
C09 C10 IN305	6WR10 LOSS OF CLOSE DC	THIS DWG
C11 C12 IN306	6WR10 TANK HTR TROUBLE	THIS DWG
C13 C14 IN307	SPARE	THIS DWG
C15 C16 IN308	6WR13 LOW GAS	WRC-E-182B
D01 D02 IN401	6WR13 LOW GAS LOCKOUT	WRC-E-182B
D03 D04 IN402	6WR13 MOTOR TROUBLE	WRC-E-182B
D05 D06 IN403	6WR13 LOSS OF CLOSE DC	WRC-E-182B
D07 D08 IN404	6WR13 TANK HTR TROUBLE	WRC-E-182B
D09 D10 IN405	6WR16 LOW GAS	WRC-E-182B
D11 D12 IN406	6WR16 LOW GAS LOCKOUT	WRC-E-182B
D13 D14 IN407	6WR16 MOTOR TROUBLE	WRC-E-182B
D15 D16 IN408	6WR16 LOSS OF CLOSE DC	WRC-E-182B
E01 E02 IN501	6WR16 TANK HTR TROUBLE	WRC-E-182B
E03 E04 IN502	SPARE	WRC-E-182B
E05 E06 IN503	SPARE	WRC-E-182B
E07 E08 IN504	SPARE	WRC-E-182B
E09 E10 IN505	SPARE	WRC-E-182B
E11 E12 IN506	SPARE	WRC-E-182B
E13 E14 IN507	SPARE	WRC-E-182B
E15 E16 IN508	SPARE	WRC-E-182B
Z01 Z02 IN601	SPARE	WRC-E-182B
Z03 Z04 IN602	SPARE	WRC-E-182B
Z05 Z06 IN603	SPARE	WRC-E-182B
Z07 Z08 IN604	SPARE	WRC-E-182B
Z09 Z10 IN605	SPARE	WRC-E-182B
Z11 Z12 IN606	SPARE	WRC-E-182B
Z13 Z14 IN607	SPARE	WRC-E-182B
Z15 Z16 IN608	SPARE	WRC-E-182B

RIO-2 OUTPUTS

CONTACT	FUNCTION	DRAWING REFERENCE
A03 A04 OUT101		
A05 A06 OUT102		
A07 A08 / A09 OUT103	SELF DIAGNOSTIC	WRC-E-183A

COMMUNICATION PORTS

PORT	SPEED	FUNCTION	CONNECTION
F	19200	LOCAL	-
1	10M	LAN	ETH. SW. #2
2	N/A	N/A	-
3	19200	LOCAL	-

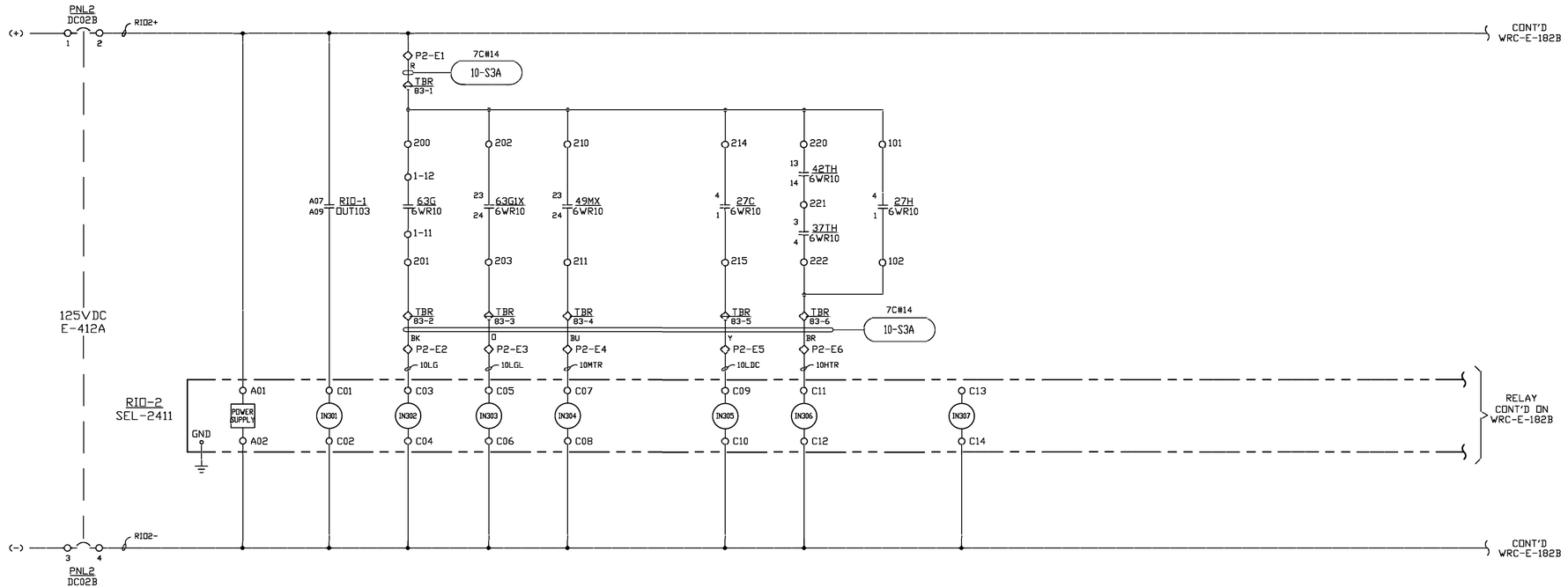

NOTES:
1. ALL ANNUNCIATOR WIRING TO BE #16, UNLESS NOTED.
2. MULTI CONDUCTOR CABLE TO BE XHHW-2 WITH CPE JACKET.
3. ALL CONTACTS ARE SHOWN IN THE NON-ALARM STATE

LEGEND:
◇ INDICATES TERMINAL POINT

DATE	DRAWN BY	NO.	APPROVED BY	REVISION DESCRIPTION
06-20	SMW	1	PDK	CONFORMING TO CONSTRUCTION RECORDS
10-19	SMW	0	PDK	FOR CONSTRUCTION

BLACK HILLS ENERGY

WEST RAPID CITY SUBSTATION
DC SCHEMATIC
ALARM PROCESSOR #2

DRAWN BY SMW DATE 1-19
APPROVED BY PDK DATE 1-19

DWG NO. WRC-E-182A REVISION NO. 1

DGR ENGINEERING
ROCK RAPIDS, IOWA
(712) 472-2531

P:\04\23900\DWG\RECORD\WRC\CAD\WRC-E-182A.DWG

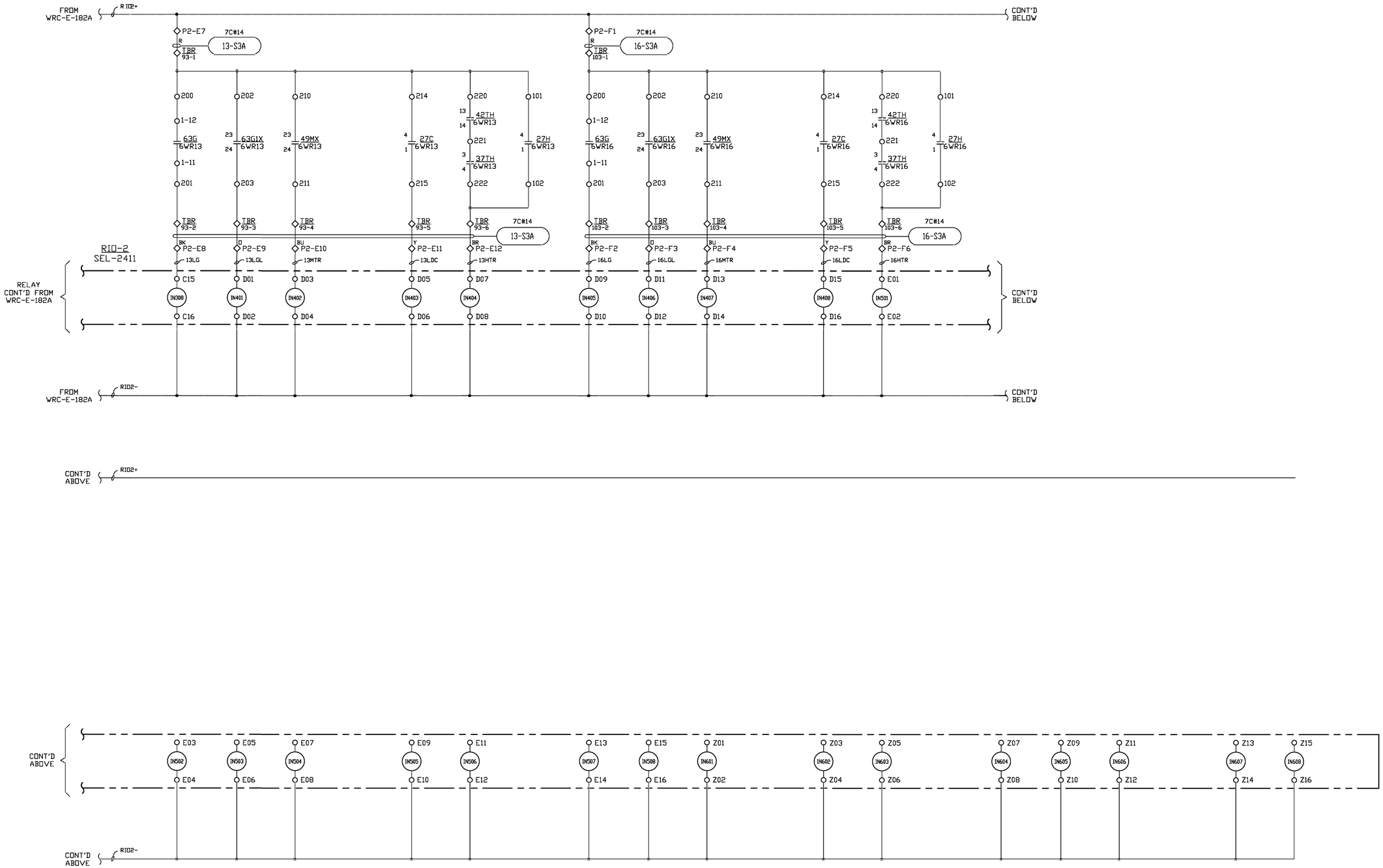

NOTES:
1. ALL ANNUNCIATOR WIRING TO BE #16, UNLESS NOTED.
2. MULTI CONDUCTOR CABLE TO BE XHHW-2 WITH CPE JACKET.
3. ALL CONTACTS ARE SHOWN IN THE NON-ALARM STATE

LEGEND:
◇ INDICATES TERMINAL POINT

P:\04\233\00\DWG\RECORD\WRC\CAD\WRC-E-182B.DWG

DGR ENGINEERING
ROCK RAPIDS, IOWA
(712) 472-2531

DATE	DRAWN BY	NO.	APPROVED BY	REVISION DESCRIPTION
06-20	SMW	1	PDK	CONFORMING TO CONSTRUCTION RECORDS
10-19	SMW	0	PDK	FOR CONSTRUCTION

BLACK HILLS ENERGY
WEST RAPID CITY SUBSTATION
DC SCHEMATIC
ALARM PROCESSOR #2

DRAWN BY SMW DATE 1-19
APPROVED BY PDK DATE 1-19
DWG NO. WRC-E-182B REVISION 1 NO.

RIO-3 INPUTS

INPUT	FUNCTION	DRAWING REFERENCE
IN101 A10 / A11 / A12 IN102		
C01 IN301 C02	RIO-2 SELF DIAGNOSTIC	THIS DWG
C03 IN302 C04	SPARE	THIS DWG
C05 IN303 C06	SPARE	THIS DWG
C07 IN304 C08	SPARE	THIS DWG
C09 IN305 C10	SPARE	THIS DWG
C11 IN306 C12	SPARE	THIS DWG
C13 IN307 C14	SPARE	THIS DWG
C15 IN308 C16	SPARE	WRC-E-183B
D01 IN401 D02	SPARE	WRC-E-183B
D03 IN402 D04	SPARE	WRC-E-183B
D05 IN403 D06	SPARE	WRC-E-183B
D07 IN404 D08	86BT1 SCADA STATUS	WRC-E-183B
D09 IN405 D10	51HT1 MALF. ALARM	WRC-E-183B
D11 IN406 D12	87B2 PRI MALF. ALARM	WRC-E-183B
D13 IN407 D14	86B2 SCADA STATUS	WRC-E-183B
D15 IN408 D16	86B2PCD SCADA STATUS	WRC-E-183B
E01 IN501 E02	86B2BCD SCADA STATUS	WRC-E-183B
E03 IN502 E04	SPARE	WRC-E-183B
E05 IN503 E06	RTU ALARM	WRC-E-183B
E07 IN504 E08	ETH SW #1 HARDWARE ALARM	WRC-E-183B
E09 IN505 E10	ETH SW #1 SOFTWARE ALARM	WRC-E-183B
E11 IN506 E12	ETH SW #2 HARDWARE ALARM	WRC-E-183B
E13 IN507 E14	ETH SW #2 SOFTWARE ALARM	WRC-E-183B
E15 IN508 E16	MUX MAJOR ALARM	WRC-E-183B
Z01 IN601 Z02	MUX MINOR ALARM	WRC-E-183B
Z03 IN602 Z04	CLOCK SELF-DIAGNOSTIC	WRC-E-183B
Z05 IN603 Z06	BATTERY CHARGER ALARM	WRC-E-183B
Z07 IN604 Z08	BUILDING ALARMS	WRC-E-183B
Z09 IN605 Z10	SPARE	WRC-E-183B
Z11 IN606 Z12	SPARE	WRC-E-183B
Z13 IN607 Z14	SPARE	WRC-E-183B
Z15 IN608 Z16	SPARE	WRC-E-183B

RIO-3 OUTPUTS

CONTACT	FUNCTION	DRAWING REFERENCE
A03 OUT101 A04		
A05 OUT102 A06		
A07 OUT103 A08 / A09	SELF DIAGNOSTIC	WRC-E-181A

COMMUNICATION PORTS			
PORT	SPEED	FUNCTION	CONNECTION
F	19200	LOCAL	-
1	10M	LAN	ETH. SW. #2
2	N/A	N/A	-
3	19200	LOCAL	-

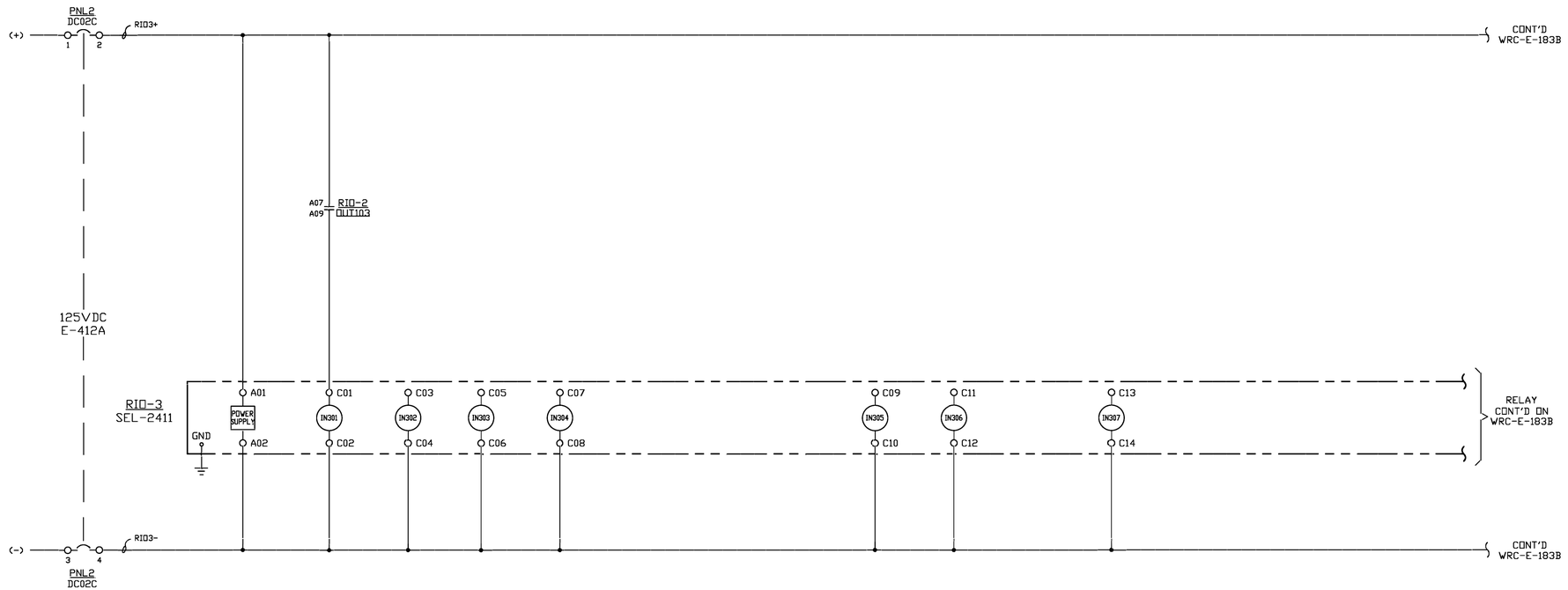

NOTES:
1. ALL ANNUNCIATOR WIRING TO BE #16, UNLESS NOTED.
2. MULTI CONDUCTOR CABLE TO BE XHHW-2 WITH CPE JACKET.
3. ALL CONTACTS ARE SHOWN IN THE NON-ALARM STATE

LEGEND:
◇ INDICATES TERMINAL POINT

DATE	DRAWN BY	NO.	APPROVED BY	REVISION DESCRIPTION
06-20	SMW	1	PDK	CONFORMING TO CONSTRUCTION RECORDS
10-19	SMW	0	PDK	FOR CONSTRUCTION

BLACK HILLS ENERGY

WEST RAPID CITY SUBSTATION
DC SCHEMATIC
ALARM PROCESSOR #3

DRAWN BY SMW DATE 1-19
APPROVED BY PDK DATE 1-19
DWG NO. WRC-E-183A REVISION 1

DGR ENGINEERING
ROCK RAPIDS, IOWA
(712) 472-2531

P:\04\233000\DWG\RECORD\WRC\CAD\WRC-E-183A.DWG

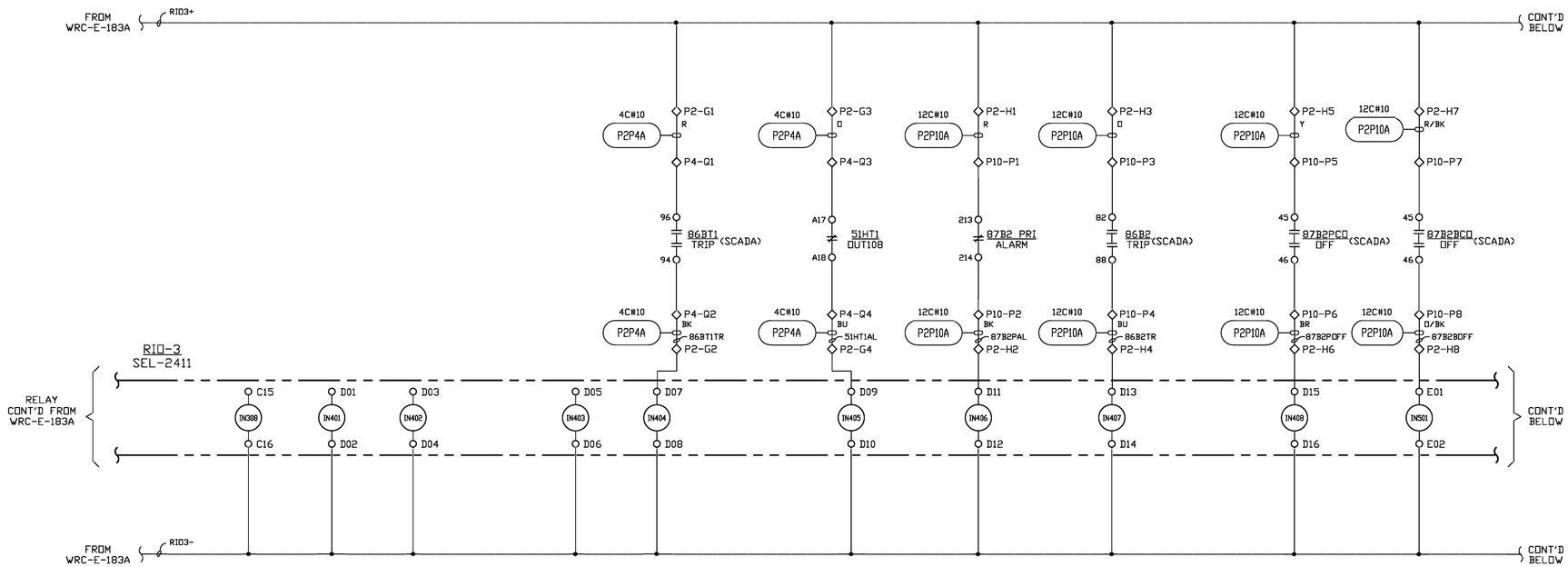

NOTES:
1. ALL ANNUNCIATOR WIRING TO BE #16, UNLESS NOTED.
2. MULTI CONDUCTOR CABLE TO BE XHHW-2 WITH CPE JACKET.
3. ALL CONTACTS ARE SHOWN IN THE NON-ALARM STATE

LEGEND:
◇ INDICATES TERMINAL POINT

DATE	DRAWN BY	NO.	APPROVED BY	REVISION DESCRIPTION
06-20	SMW	1	PDK	CONFORMING TO CONSTRUCTION RECORDS
10-19	SMW	0	PDK	FOR CONSTRUCTION

DRAWN BY SMW DATE 1-19
APPROVED BY PDK DATE 1-19

BLACK HILLS ENERGY

WEST RAPID CITY SUBSTATION
DC SCHEMATIC
ALARM PROCESSOR #3

DWG NO. WRC-E-183B REVISION 1

DGR ENGINEERING
ROCK RAPIDS, IOWA
(712) 472-2531

P:\04233\00\DWG\RECORD\WRC\CAD\WRC-E-183B.DWG

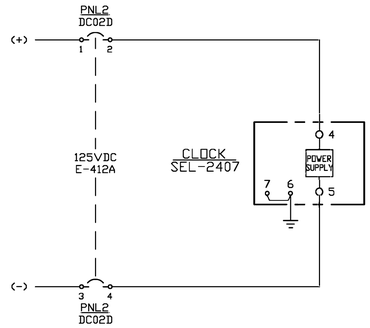

CLOCK

CONTACT	FUNCTION	DRAWING REFERENCE
2 ALARM 1 3	SELF DIAGNOSTIC	WRC-E-183B

CLOCK

IRIG CONNECTIONS	
PORT	CONNECTION
OUT1	SEE WRC-E-012
OUT2	SEE WRC-E-012
OUT3	SEE WRC-E-012
OUT4	SEE WRC-E-012
OUT5	SEE WRC-E-012
OUT6	SEE WRC-E-012
ANT	SEE WRC-E-012
MOD	SEE WRC-E-012
SERIAL	SEE WRC-E-012
FIBER/SERIAL	SEE WRC-E-012

P:\04233\00\DWG\RECORD\WRC\CAD\WRC-E-190.DWG

NOTES:
1. ALL WIRING TO BE #12, UNLESS NOTED.
2. MULTI CONDUCTOR CABLE TO BE XHHW-2 WITH CPE JACKET.

LEGEND:
◇ INDICATES TERMINAL POINT

DGR ENGINEERING
ROCK RAPIDS, IOWA
(712) 472-2531

DATE	DRAWN BY	NO.	APPROVED BY	REVISION DESCRIPTION
06-20	SMW	1	PDK	CONFORMING TO CONSTRUCTION RECORDS
10-19	SMW	0	PDK	FOR CONSTRUCTION

BLACK HILLS ENERGY

WEST RAPID CITY SUBSTATION

DC SCHEMATIC
GPS CLOCK

DRAWN BY SMW DATE 1-19
APPROVED BY PDK DATE 1-19

DWG NO. WRC-E-190 REVISION 1

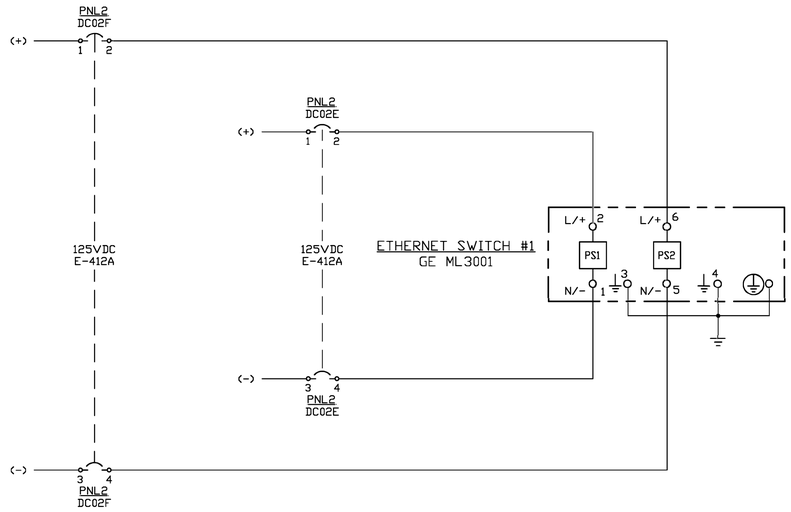

ETHERNET SWITCH #1		
CONTACT	FUNCTION	DRAWING REFERENCE
1 — HW — 2	HARDWARE ALARM	WRC-E-183B
3 — SW — 4	SOFTWARE ALARM	WRC-E-183B

ETHERNET SWITCH #1

COMMUNICATION PORTS		
PORT	FUNCTION	CONNECTION
SLOT 1	EMPTY	
SLOT 2	EMPTY	
SLOT 3-PORT 1	LAN (RJ45)	SEE WRC-E-011B
SLOT 3-PORT 2	LAN (RJ45)	SEE WRC-E-011B
SLOT 3-PORT 3	LAN (RJ45)	SEE WRC-E-011B
SLOT 3-PORT 4	LAN (RJ45)	SEE WRC-E-011B
SLOT 4-PORT 1	LAN (RJ45)	SEE WRC-E-011B
SLOT 4-PORT 2	LAN (RJ45)	SEE WRC-E-011B
SLOT 4-PORT 3	LAN (RJ45)	SEE WRC-E-011B
SLOT 4-PORT 4	LAN (RJ45)	SEE WRC-E-011B
SLOT 5-PORT 1	LAN (RJ45)	SEE WRC-E-011B
SLOT 5-PORT 2	LAN (RJ45)	SEE WRC-E-011B
SLOT 5-PORT 3	LAN (RJ45)	SEE WRC-E-011B
SLOT 5-PORT 4	LAN (RJ45)	SEE WRC-E-011B
SLOT 6-PORT 1	LAN (RJ45)	SEE WRC-E-011B
SLOT 6-PORT 2	LAN (RJ45)	SEE WRC-E-011B
SLOT 6-PORT 3	LAN (RJ45)	SEE WRC-E-011B
SLOT 6-PORT 4	LAN (RJ45)	SEE WRC-E-011B
SLOT 7-PORT 1	LAN (RJ45)	SEE WRC-E-011B
SLOT 7-PORT 2	LAN (RJ45)	SEE WRC-E-011B
SLOT 7-PORT 3	LAN (RJ45)	SEE WRC-E-011B
SLOT 7-PORT 4	LAN (RJ45)	SEE WRC-E-011B
SLOT 8-PORT 1	LAN (RJ45)	SEE WRC-E-011B
SLOT 8-PORT 2	LAN (RJ45)	SEE WRC-E-011B
SLOT 8-PORT 3	LAN (RJ45)	SEE WRC-E-011B
SLOT 8-PORT 4	LAN (RJ45)	SEE WRC-E-011B
SLOT 9-PORT 1	LAN (RJ45)	SEE WRC-E-011B
SLOT 9-PORT 2	LAN (RJ45)	SEE WRC-E-011B
SLOT 9-PORT 3	LAN (RJ45)	SEE WRC-E-011B
SLOT 9-PORT 4	LAN (RJ45)	SEE WRC-E-011B
SLOT 10-PORT 1	LAN (LC)	SEE WRC-E-011B
SLOT 10-PORT 2	LAN (LC)	SEE WRC-E-011B
SLOT 10-PORT 3	LAN (LC)	SEE WRC-E-011B
SLOT 10-PORT 4	LAN (LC)	SEE WRC-E-011B
FRONT	LOCAL (RS232)	

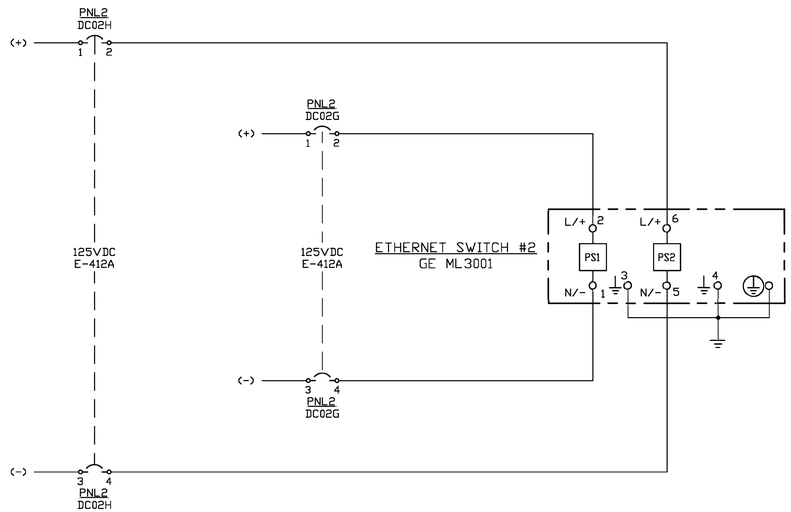

ETHERNET SWITCH #2		
CONTACT	FUNCTION	DRAWING REFERENCE
1 — HW — 2	HARDWARE ALARM	WRC-E-183B
3 — SW — 4	SOFTWARE ALARM	WRC-E-183B

ETHERNET SWITCH #2

COMMUNICATION PORTS		
PORT	FUNCTION	CONNECTION
SLOT 1	EMPTY	
SLOT 2	EMPTY	
SLOT 3-PORT 1	LAN (RJ45)	SEE WRC-E-011B
SLOT 3-PORT 2	LAN (RJ45)	SEE WRC-E-011B
SLOT 3-PORT 3	LAN (RJ45)	SEE WRC-E-011B
SLOT 3-PORT 4	LAN (RJ45)	SEE WRC-E-011B
SLOT 4-PORT 1	LAN (RJ45)	SEE WRC-E-011B
SLOT 4-PORT 2	LAN (RJ45)	SEE WRC-E-011B
SLOT 4-PORT 3	LAN (RJ45)	SEE WRC-E-011B
SLOT 4-PORT 4	LAN (RJ45)	SEE WRC-E-011B
SLOT 5-PORT 1	LAN (RJ45)	SEE WRC-E-011B
SLOT 5-PORT 2	LAN (RJ45)	SEE WRC-E-011B
SLOT 5-PORT 3	LAN (RJ45)	SEE WRC-E-011B
SLOT 5-PORT 4	LAN (RJ45)	SEE WRC-E-011B
SLOT 6-PORT 1	LAN (RJ45)	SEE WRC-E-011B
SLOT 6-PORT 2	LAN (RJ45)	SEE WRC-E-011B
SLOT 6-PORT 3	LAN (RJ45)	SEE WRC-E-011B
SLOT 6-PORT 4	LAN (RJ45)	SEE WRC-E-011B
SLOT 7-PORT 1	LAN (RJ45)	SEE WRC-E-011B
SLOT 7-PORT 2	LAN (RJ45)	SEE WRC-E-011B
SLOT 7-PORT 3	LAN (RJ45)	SEE WRC-E-011B
SLOT 7-PORT 4	LAN (RJ45)	SEE WRC-E-011B
SLOT 8-PORT 1	LAN (RJ45)	SEE WRC-E-011B
SLOT 8-PORT 2	LAN (RJ45)	SEE WRC-E-011B
SLOT 8-PORT 3	LAN (RJ45)	SEE WRC-E-011B
SLOT 8-PORT 4	LAN (RJ45)	SEE WRC-E-011B
SLOT 9-PORT 1	LAN (RJ45)	SEE WRC-E-011B
SLOT 9-PORT 2	LAN (RJ45)	SEE WRC-E-011B
SLOT 9-PORT 3	LAN (RJ45)	SEE WRC-E-011B
SLOT 9-PORT 4	LAN (RJ45)	SEE WRC-E-011B
SLOT 10-PORT 1	LAN (LC)	SEE WRC-E-011B
SLOT 10-PORT 2	LAN (LC)	SEE WRC-E-011B
SLOT 10-PORT 3	LAN (LC)	SEE WRC-E-011B
SLOT 10-PORT 4	LAN (LC)	SEE WRC-E-011B
FRONT	LOCAL (RS232)	

NOTES:
1. ALL WIRING TO BE #12, UNLESS NOTED.
2. MULTI CONDUCTOR CABLE TO BE XHHW-2 WITH CPE JACKET.

LEGEND:
◇ INDICATES TERMINAL POINT

P:\04023900\DWG\RECORDWRCCAD\WRC-E-191.DWG

DGR ENGINEERING
ROCK RAPIDS, IOWA
(712) 472-2531

DATE	DRAWN BY	NO.	APPROVED BY	REVISION DESCRIPTION
06-20	SMW	1	PDK	CONFORMING TO CONSTRUCTION RECORDS
10-19	SMW	0	PDK	FOR CONSTRUCTION

BLACK HILLS ENERGY

WEST RAPID CITY SUBSTATION
DC SCHEMATIC
ETHERNET SWITCH #1 AND #2

DRAWN BY SMW DATE 1-19
APPROVED BY PDK DATE 1-19

DWG NO. WRC-E-191 REVISION 1

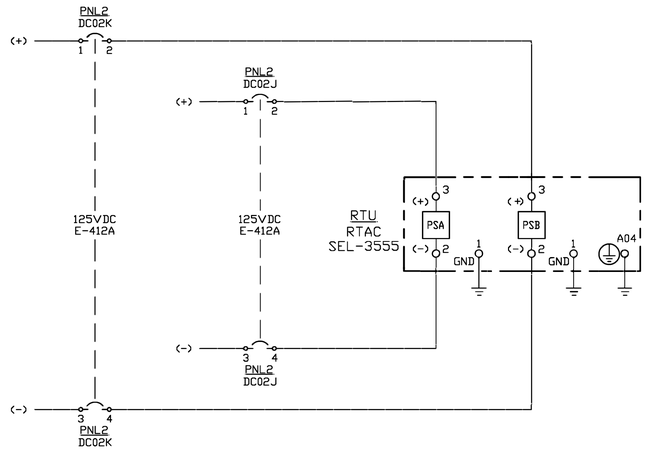

RTU OUTPUTS		
CONTACT	FUNCTION	DRAWING REFERENCE
A02 — A01 / A03 — ALARM	SELF-DIAGNOSTIC	WRC-E-183B

COMMUNICATION PORTS		
PORT	FUNCTION	CONNECTION
ETH1	10/100 BASE T	ETHERNET SW. #1
ETH2	10/100 BASE T	
FRONT-USB	USB-TYPE A	
FRONT-USB	USB-TYPE A	
COM1	RS-232	ROUTER
COM2	RS-232	
PCI1	EMPTY	
PCI2-PORT 1	RJ45 SERIAL	IRIG-B (CLOCK)
PCI2-PORT 2	RJ45 SERIAL	87BT1 (PORT 1)
PCI2-PORT 3	RJ45 SERIAL	87T1 BU (PORT 2)
PCI2-PORT 4	RJ45 SERIAL	87B2 PRI (PORT 1)
PCI2-PORT 5	RJ45 SERIAL	87B2 BU (PORT 1)
PCI2-PORT 6	RJ45 SERIAL	
PCI3	EMPTY	
PCI4-PORT 1	RJ45 10/100/1000	
PCI4-PORT 2	RJ45 10/100/1000	
PCI4-PORT 3	RJ45 10/100/1000	
PCI4-PORT 4	RJ45 10/100/1000	
PCI5	EMPTY	
AUDIO-1		
AUDIO-2		
AUDIO-3		
USB1	USB-TYPE A	
USB2	USB-TYPE A	
USB3	USB-TYPE A	
USB4	USB-TYPE A	

NOTES:
1. ALL WIRING TO BE #12, UNLESS NOTED.
2. MULTI CONDUCTOR CABLE TO BE XHHW-2 WITH CPE JACKET.

LEGEND:
◇ INDICATES TERMINAL POINT

P:\04023\00\DWG\RECORD\WRC\CAD\WRC-E-196.DWG

DGR ENGINEERING
ROCK RAPIDS, IOWA
(712) 472-2531

DATE	DRAWN BY	NO.	APPROVED BY	REVISION DESCRIPTION
06-20	SMW	1	PJK	CONFORMING TO CONSTRUCTION RECORDS
10-19	SMW	0	PJK	FOR CONSTRUCTION

BLACK HILLS ENERGY
WEST RAPID CITY SUBSTATION
DC SCHEMATIC
RTU

DRAWN BY SMW DATE 1-19
APPROVED BY PJK DATE 1-19
DWG NO. WRC-E-196
SECTION NO. 1

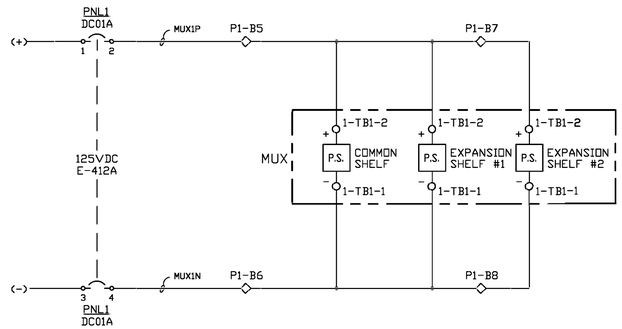

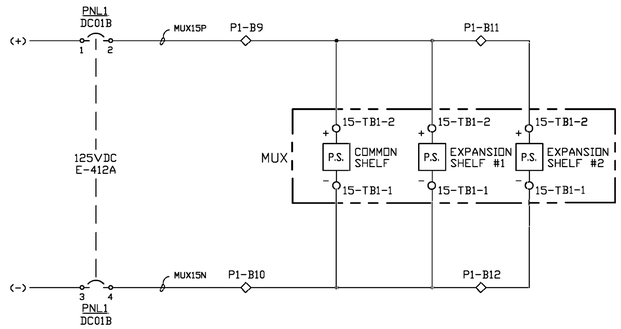

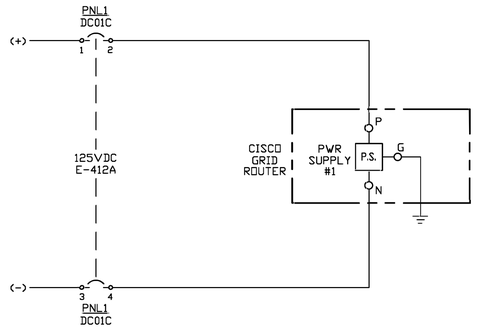

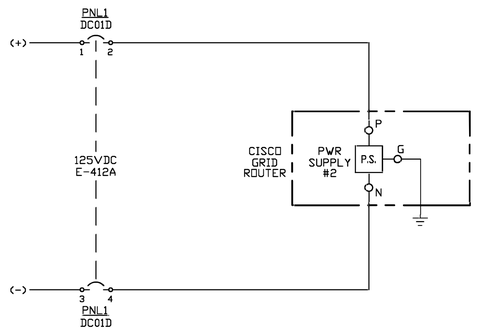

NOTES:
1. ALL WIRING TO BE #12, UNLESS NOTED.
2. MULTI CONDUCTOR CABLE TO BE XHHW-2 WITH CPE JACKET.

LEGEND:
◇ INDICATES TERMINAL POINT

P:\04123\00\DWGRECORD\WRCCAD\WRC-E-197.DWG

DGR ENGINEERING
ROCK RAPIDS, IOWA
(712) 472-2531

DATE	DRAWN BY	NO.	APPROVED BY	REVISION DESCRIPTION
06-20	SMW	1	PDK	CONFORMING TO CONSTRUCTION RECORDS
10-19	SMW	0	PDK	FOR CONSTRUCTION

BLACK HILLS ENERGY

WEST RAPID CITY SUBSTATION
DC SCHEMATIC
FIBER/COMM EQUIPMENT

DRAWN BY SMW DATE 1-19
APPROVED BY PDK DATE 1-19
DWG NO. WRC-E-197
REVISION 1

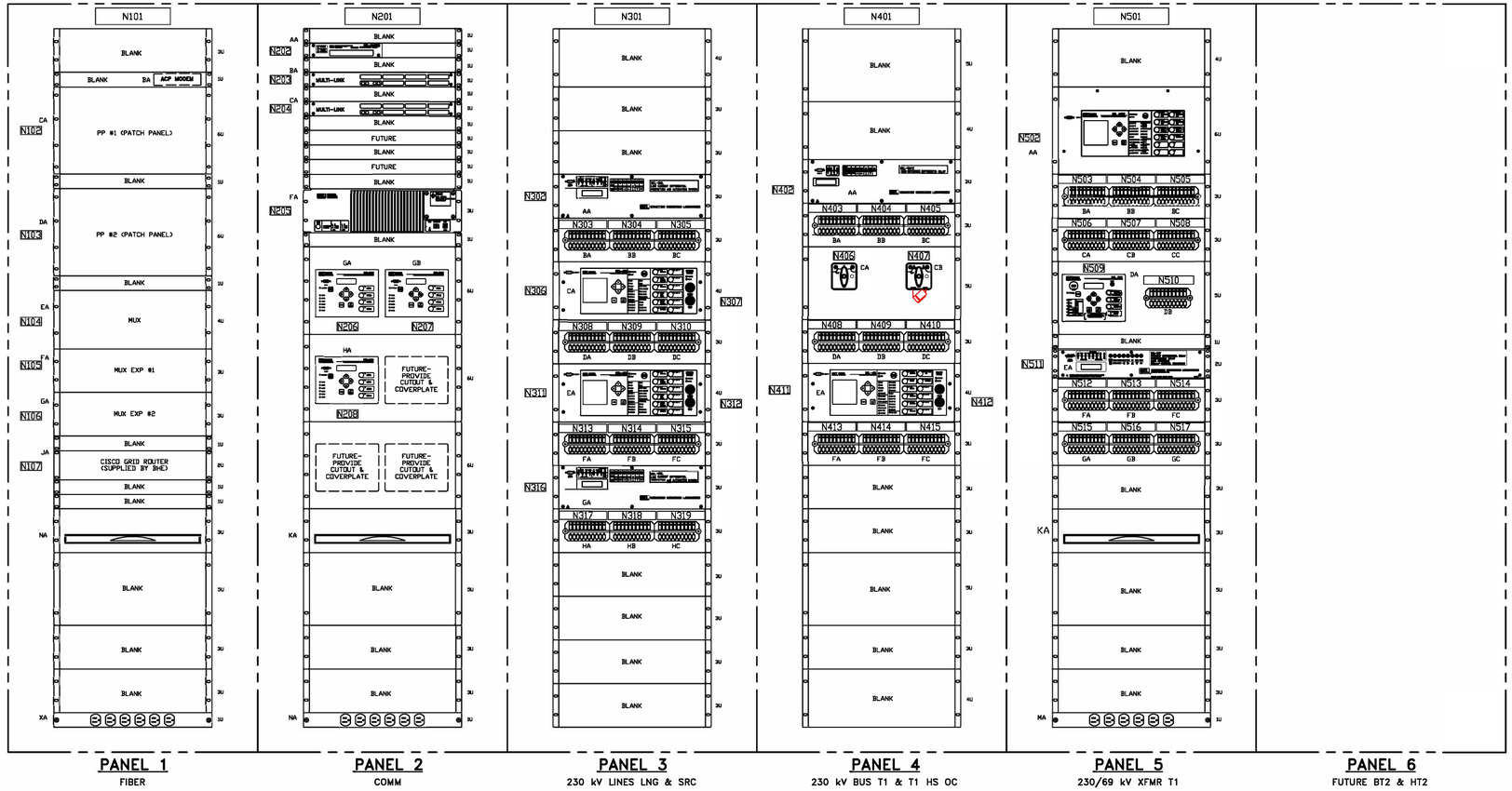

P:\04023300\DWG\RECORD\WRC\CAD\WRC-E-200A.DWG

DGR ENGINEERING
ROCK RAPIDS, IOWA
(712) 472-2531

DATE	DRAWN BY	NO.	APPROVED BY	REVISION DESCRIPTION
06-20	SMW	1	PDK	CONFORMING TO CONSTRUCTION RECORDS
10-19	SMW	0	PDK	FOR CONSTRUCTION

BLACK HILLS ENERGY

WEST RAPID CITY SUBSTATION

PANEL ARRANGEMENT
PANELS 1 THROUGH 6

DRAWN BY SMW DATE 11-18
APPROVED BY PDK DATE 11-18

DWG NO. WRC-E-200A REVISION 1

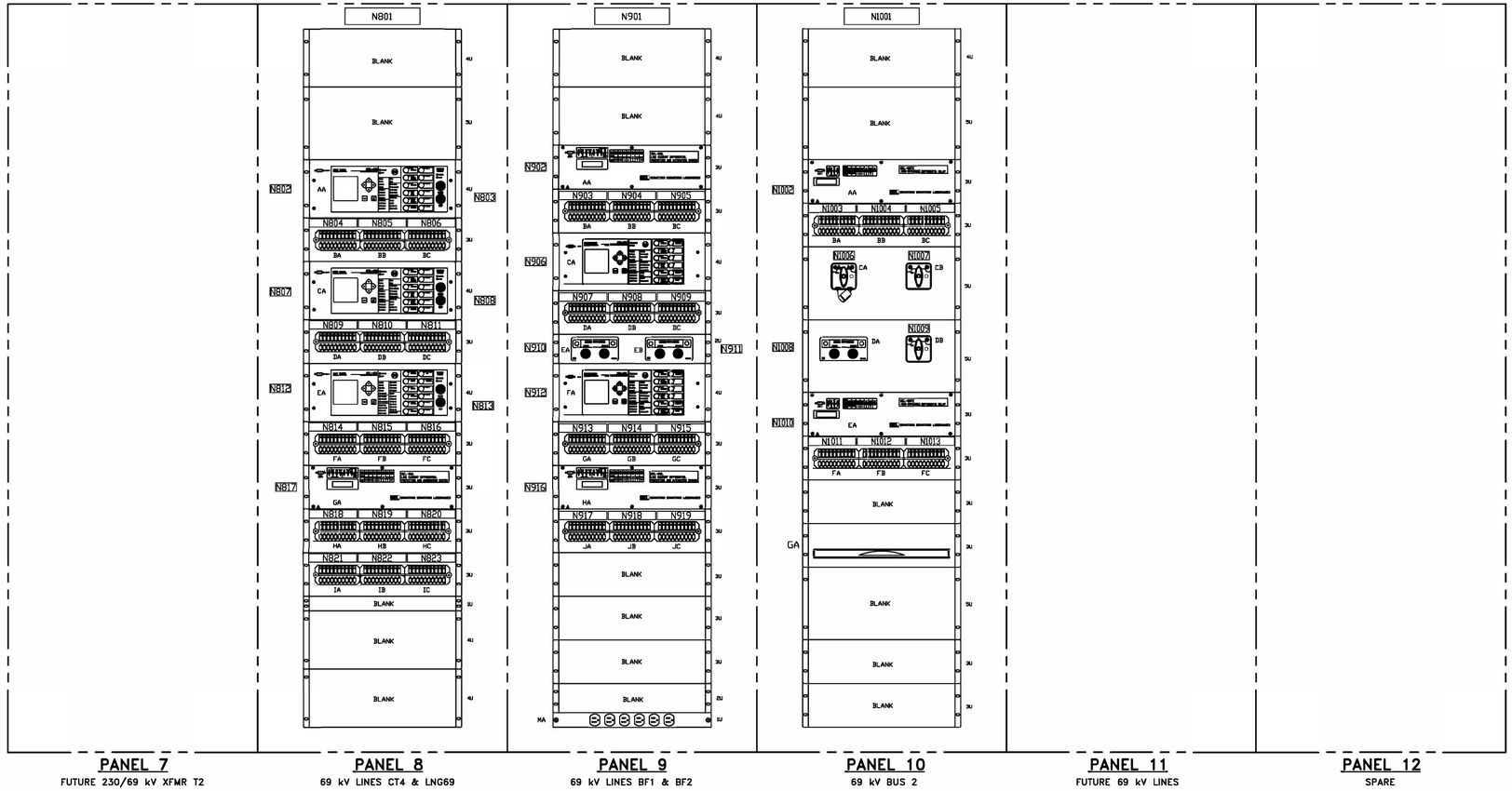

PANEL 7
FUTURE 230/69 kV XFMR T2

PANEL 8
69 kV LINES CT4 & LNG69

PANEL 9
69 kV LINES BF1 & BF2

PANEL 10
69 kV BUS 2

PANEL 11
FUTURE 69 kV LINES

PANEL 12
SPARE

P:\0402310\DWG\RECORD\WRC\CAD\WRC-E-200B.DWG

DGR ENGINEERING
ROCK RAPIDS, IOWA
(712) 472-2531

DATE	DRAWN BY	NO.	APPROVED BY	REVISION DESCRIPTION
06-20	SMW	1	PDK	CONFORMING TO CONSTRUCTION RECORDS
10-19	SMW	0	PDK	FOR CONSTRUCTION

BLACK HILLS ENERGY

WEST RAPID CITY SUBSTATION

PANEL ARRANGEMENT
PANELS 7 THROUGH 12

DRAWN BY SMW DATE 11-18
APPROVED BY PDK DATE 11-18

DWG NO. WRC-E-200B REVISION 1

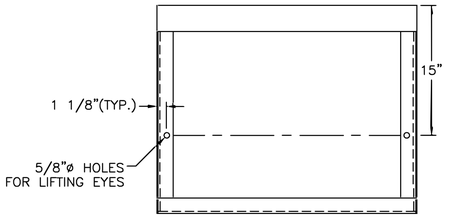

TOP VIEW
(OPEN TOP)

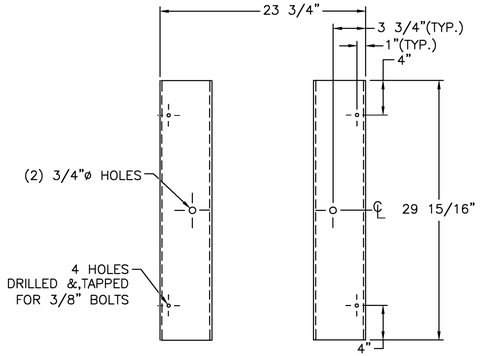

BASE LAYOUT
(WITH 6 X 8.2# CHANNEL)

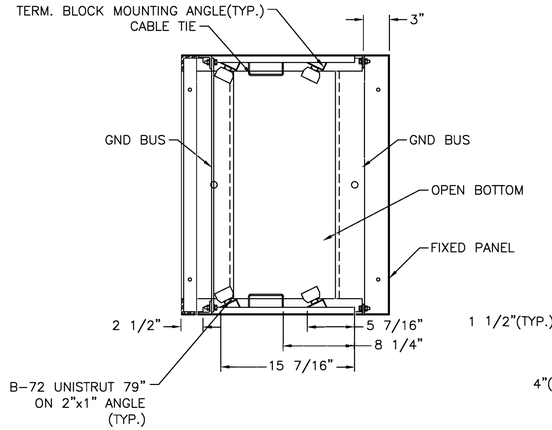

SECTION A-A

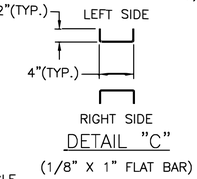

DETAIL "C"
(1/8" X 1" FLAT BAR)

NOTES:

1) ALL DIMENSIONS ARE IN INCHES.
2) CUBICLE MATERIAL AS LISTED BELOW:
   A) FIXED PANEL 11 GA.(.120 THICK) CRS SHEET.
   B) SUB PANEL 12 GA.(.105 THICK) HRS SHEET.
   C) SIDE SHEETS 11 GA.(.120 THICK) CRS SHEET.
   D) STIFFENERS 1/4x1 FLAT BAR.
   E) BASE CHANNEL 6x8.2#
   F) GRD BUS 1/4x1 1/2 COPPER BAR DRILLED AND TAPPED WITH 24 #10-32 HOLES.
   G) FRAMING ANGLE 1 3/4x1 3/4x1/4
3) START TERMINAL BOARDS AT LEAST 2 INCHES FROM TOP OF SUB-PANEL.
4) WELD ALL JOINTS UNLESS OTHERWISE STATED.
5) POWDER COAT WITH ANSI 61 EXTERIOR; AND WITH ANSI 61 INTERIOR.
6) DRILL AND TAP RACK MOUNTING HOLES FOR #12-24 SCREWS.
7) DO NOT MOUNT TERMINAL BLOCKS ON THE SAME HORIZONTAL PLANE AS THE PULL OUT SHELF.

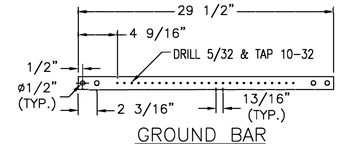

GROUND BAR

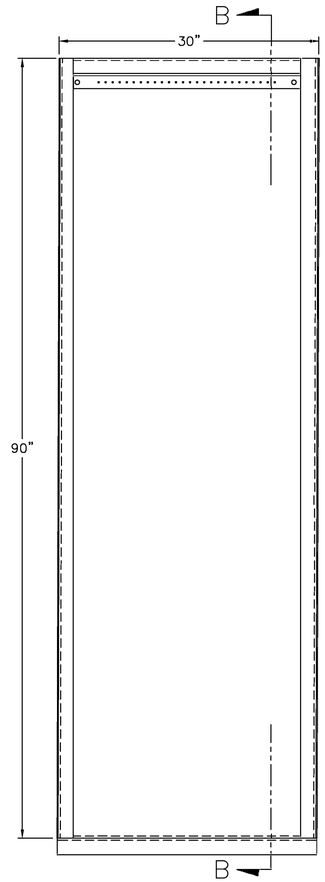

REAR VIEW

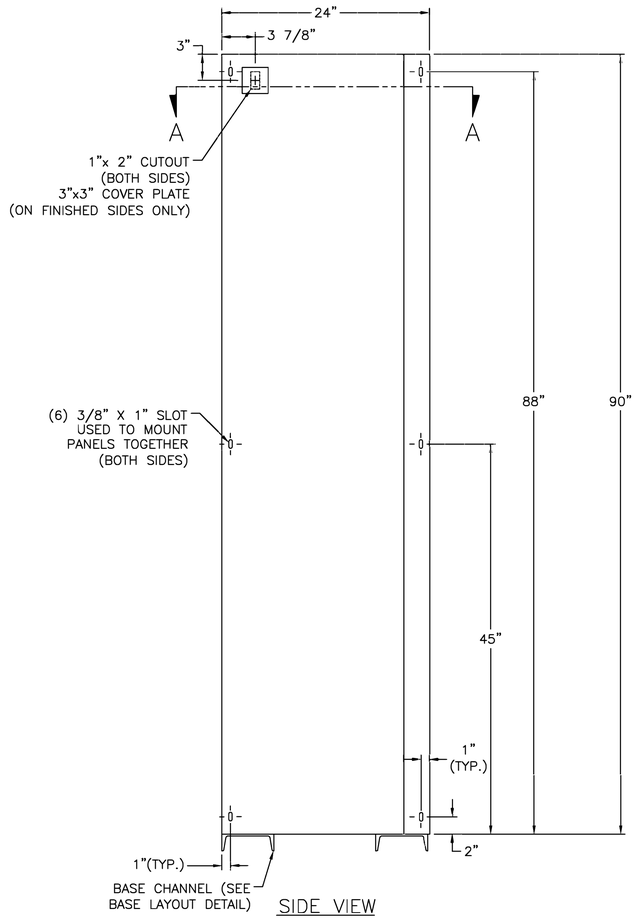

SIDE VIEW

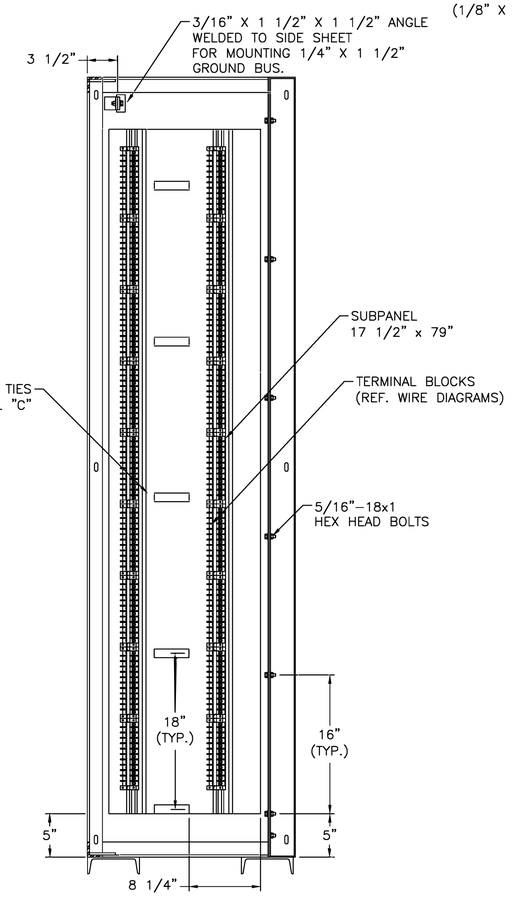

SECTION B-B

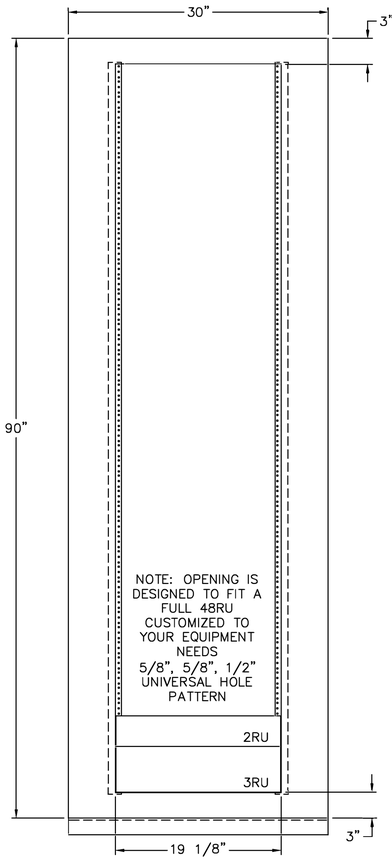

FRONT VIEW

PNL 1	PNL 2	PNL 3	PNL 4	PNL 5	FUT 6	FUT 7	PNL 8	PNL 9	PNL 10	FUT 11	FUT 12

PANEL FRONT SIDE

(8 REQUIRED)

DATE	DRAWN BY	NO.	APPROVED BY	REVISION DESCRIPTION
06-20	SMW	2	PDK	CONFORMING TO CONSTRUCTION RECORDS
4/16/19	MT/EP2	1	MT/EP2	FIXED GROUND BAR IN REAR VIEW. SWAPPED TO BHE BORDER.

BLACK HILLS ENERGY

WEST RAPID CITY SUBSTATION

PANEL FABRICATION DETAILS

DRAWN BY MT/EP2 DATE 4/5/19
APPROVED BY MT/EP2 DATE 4/5/19
DWG NO. WRC-E-200C REVISION 2

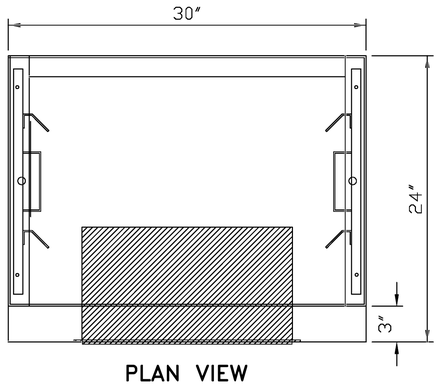

PLAN VIEW

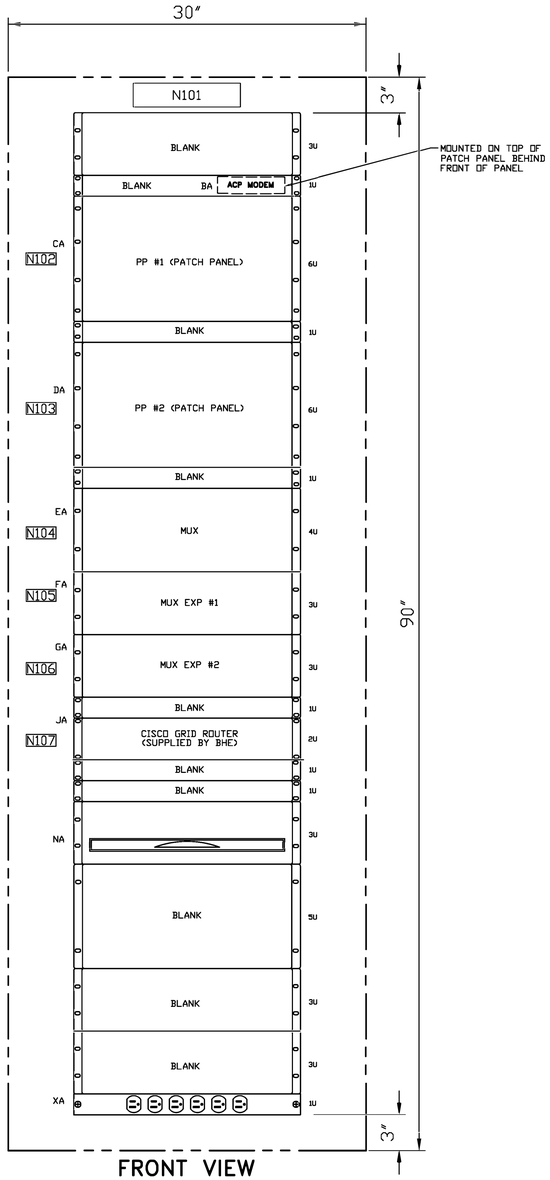

FRONT VIEW

BILL OF MATERIAL

ITEM	LOCATION	FUNCTION	DESCRIPTION	PART NO.	MANUFACTURER	QTY.
N/A	-	-	90" x 30" x 24" FREESTANDING PANEL			1
08	BA	ACP MODEM	SERIES 2.0 SWITCH & ROUTER	ACP-900	MULTI-LINK	1
10	CA	PP #1	FIBER OPTIC PATCH PANEL WITH (6) 10" SPLICE TRAYS	FTS-105-STM	CENTURY	1
10			6 POSITION SC DUPLEX ADAPTER PLATES	C10823	CENTURY	12
10			12F SCD/UPC SM 3M Pigtail Ass. W/2 SC SM Duplex 3-Packs	C12231	CENTURY	4
11	DA	PP #2	FIBER OPTIC PATCH PANEL WITH (6) 10" SPLICE TRAYS	FTS-105-STM	CENTURY	1
11			6 POSITION SC DUPLEX ADAPTER PLATES	C10823	CENTURY	12
11			12F SCD/UPC SM 3M Pigtail Ass. W/2 SC SM Duplex 3-Packs	C12231	CENTURY	4
01	EA	MUX	JUNGLEMUX SONET MULTIPLEXOR	B86430-01	GE LENTRONICS	1
01			POWER CONVERTER 130V	B86431-03	GE LENTRONICS	6
01			POWER UNIT PADDLE BOARD	86431-90	GE LENTRONICS	6
01			CS SERVICE UNIT (E/W LEGACY IMAGE)	B86434-11	GE LENTRONICS	1
01			SERVICE UNIT/IPSU/CSSU PADDLE BOARD	86434-92	GE LENTRONICS	1
01			BLANK PANEL	B86427-01	GE LENTRONICS	13
01			DC-48 JMUX UNIT, 1310NM, IR-1, 13DB, SMF, LC	B86419-01/AA	GE LENTRONICS	2
01			CABLE ASSY. XOVER, GREY, CAT-6, RJ-45, SHIELDED, 7'	135-86419-01	GE LENTRONICS	1
01			28VT JMUX TO JJIF CABLE (LEFT SIDE)	035-86430-65	GE LENTRONICS	1
01			28VT JMUX TO JJIF CABLE (RIGHT SIDE)	035-86430-66	GE LENTRONICS	1
01			CDAX UNIT	B86486-01	GE LENTRONICS	4
01			CDAX PADDLEBOARD	86486-91	GE LENTRONICS	2
01			ETHER-1000 UNIT (2.0)	B86498-02	GE LENTRONICS	1
01			ETHER-1000 PADDLEBOARD-2 SLOT MAIN BOARD	86498-94	GE LENTRONICS	1
01			ETHER-1000 PADDLEBOARD-QUAD SFP MODULE	86498-95	GE LENTRONICS	1
01			ETHER-100 PADDLEBOARD-QUAD RJ-45 MODULE	86418-61	GE LENTRONICS	1
01			CBW/SPE CABLE (36IN)XFLAT RIBBON, WITH DC-48)	035-86430-95	GE LENTRONICS	2
01			DUAL PORT FXS UNIT	B86445-32	GE LENTRONICS	3
01			DUAL PORT FXS UNIT PADDLEBOARD	B86445-92	GE LENTRONICS	3
01			DATA UNIT-L.S. RS-232 (=<38.4K)	B86448-03	GE LENTRONICS	2
01			DATA UNIT PADDLEBOARD (TERMINAL BLOCK)	86447-90	GE LENTRONICS	2
01			DATA-NX64F UNIT (64-768K)	B86464-02	GE LENTRONICS	16
01			DATA-NX64F UNIT FIBER PB (C37.94MMF)	86464-98	GE LENTRONICS	16
01			TPIM-JMUX, TN1U AND TN1UE FULL MANUAL (CD)	86451-03	GE LENTRONICS	1
01			VT/DS0 RIBBON CABLE KIT	86430-52	GE LENTRONICS	2
01			COMPUTER CABLE KIT	86430-53	GE LENTRONICS	1
01			VISTANET NETWORK INTERFACE (VNI) TRU LICENSE, NO CD	86456-01	GE LENTRONICS	1
01			SYSTEM WIRE $TEST LABOUR-BASIC 4HRS/NODE	86400-STA1	GE LENTRONICS	1
01			ORDER ENGINEERING-FACTORY	DE	GE LENTRONICS	1
01	FA,GA	MUX-EXP #1, #2	JMUX CHANNEL SHELF (3RU)	B86430-04	GE LENTRONICS	2
06	NA	SHELF	RACK MOUNT, SLIDING SHELF	RMTS06B	BLACK BOX	1
05	XA	RECPT1	RACK MOUNT, FRONT ACCESS, 6-OUTLET POWER STRIP	RS-0615-F	TRIPPLITE	1
7100	-	TB	600 V, 30 AMP, 12-POINT TERMINAL BLOCK	EB25B12	GE	**
72	-	CB	2 POLE, 125/250 VDC MAX. MOLDED CASE CIRCUIT BREAKER, 15A	FAZ-C15/2-NA-DC	EATON	4
N/A	BUS	GND	1" x 27" x 1/4" COPPER GROUND BAR	-	-	1
			** AS NEEDED			

NAMEPLATE ENGRAVING SCHEDULE

No.	SIZE	TEXT HEIGHT	LINE No. 1	TEXT HEIGHT	LINE No. 2	TEXT HEIGHT	LINE No. 3	QTY.
N101	2" x 9"	3/4"	PANEL 1	3/8"	FIBER	3/8"	PANEL	2
N102	1" x 2 1/2"	5/16"	PP #1	3/16"	PATCH	3/16"	PANEL #1	1
N103	1" x 2 1/2"	5/16"	PP #2	3/16"	PATCH	3/16"	PANEL #2	1
N104	1" x 2 1/2"	5/16"	MUX	3/16"	COMMON	3/16"	SHELF	1
N105	1" x 2 1/2"	5/16"	MUX-EXP #1	3/16"	EXPANSION	3/16"	SHELF #1	1
N106	1" x 2 1/2"	5/16"	MUX-EXP #2	3/16"	EXPANSION	3/16"	SHELF #2	1
N107	1" x 2 1/2"	5/16"	GRID ROUTER	3/16"				1

NOTES:

1. THE PANEL COLOR SHALL BE ANSI 61 GRAY.
2. THE NAMEPLATES SHALL BE MADE OF LAMINATED PHENOLIC ENGRAVING STOCK AND SHALL UTILIZE LETTERING THAT IS STANDARD ROMAN OR SANS SERIF PRINT STYLES, UNLESS NOTED OTHERWISE.
3. ALL NAMEPLATES SHALL BE BLACK WITH WHITE CORE AND UTILIZE 3/16" LETTERING, UNLESS NOTED OTHERWISE.
4. EACH NAMEPLATE SHALL BE AFFIXED TO THE PANEL AT THE LOCATIONS SHOWN ON THE PANEL LAYOUT AND THEIR CORRESPONDING NAMEPLATE LABELING DETAIL.
5. MAIN PANEL NAMEPLATE SHALL BE AFFIXED TO THE BACK OF THE PANEL NEAR THE TOP OF THE PANEL.

P:\04233\00\DWG\RECORD\WRC\CAD\WRC-E-201.DWG

DGR ENGINEERING
ROCK RAPIDS, IOWA
(712) 472-2531

DATE	DRAWN BY	NO.	APPROVED BY	REVISION DESCRIPTION
06-20	SMW	1	PDK	CONFORMING TO CONSTRUCTION RECORDS
10-19	SMW	0	PDK	FOR CONSTRUCTION

BLACK HILLS ENERGY

WEST RAPID CITY SUBSTATION
PANEL LAYOUT
FIBER (PANEL 1)

DRAWN BY SMW DATE 11-18
APPROVED BY PDK DATE 11-18

DWG NO. WRC-E-201 REVISION 1

BA ACP MODEM

CA FIBER PATCH PANEL #1

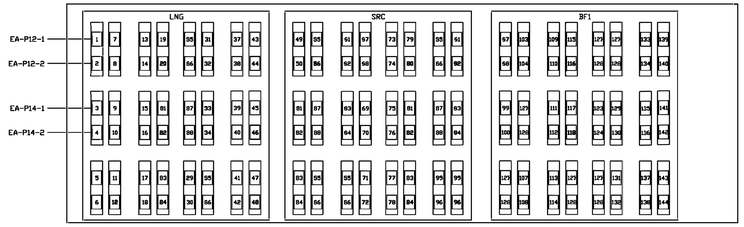

DA FIBER PATCH PANEL #2

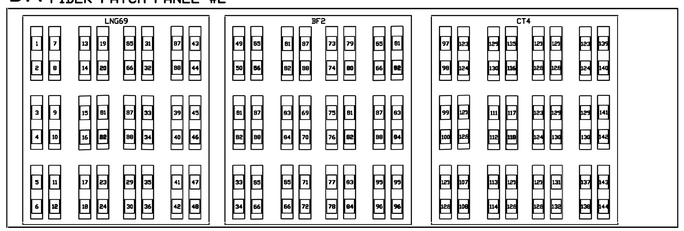

EA B86430-01 COMMON SHELF

		PORT-S (PAIR 1X) VT-4,16						PORT	S	R	Q	P	T R	RING 10	T R	
							WRC	MODE	S3	-	BD	BD	IR-1310	NODE 6	IR-1310	
							1 CH 7	TMG SRC	JIF PORT 1				SYNC MODE			
							2 CH 8						NORMAL			
							605-XXX-XXXX									
								PAIR IX								
								L	R				L		R	
130V DC		PORT 2 TIL-LNG69 PR						PORT IX					DC-48		DC-48	130V DC
PWR	ETHER-1000	CARD XX	BLANK	BLANK	BLANK	BLANK	2W VF FXS	CDAX		CDAX			JMUX	CSSU	JMUX	PWR
1	2	3	4	5	6	7	8	9	10		11		12	13	14	15

FA B86430-04 EXPANSION SHELF #1

		PORT P (PAIR 1X) VT-22		PORT Q (PAIR 1X) VT-21		PORT R (PAIR 2X) VT-18		PORT S (PAIR 2X) VT-17					
		LANGE		SOUTH RAPID		SPARE		CT4					
		CH 2	CH 1	CH 2	CH 1	CH 2	CH 1	CH 2	CH 1				
		TX ADD 96 RX ADD 95	TX ADD 94 RX ADD 93	TX ADD 92 RX ADD 91	TX ADD 90 RX ADD 89	TX ADD 92 RX ADD 91	TX ADD 90 RX ADD 89	TX ADD 96 RX ADD 95	TX ADD 94 RX ADD 93				
		CH Y	CH X	CH Y	CH X			CH Y	CH X				
130V DC		87L-LNG	87L-LNG	87L-SRC	87L-SRC	SPARE	SPARE	87L-CT4	87L-CT4				130V DC
PWR		NX64F	NX64F	NX64F	NX64F	NX64F	NX64F	NX64F	NX64F				PWR
1	2	3	4	5	6	7	8	9	10	11	12	13	14	15

GA B86430-04 EXPANSION SHELF #2

		PORT P (PAIR 2X) VT-20		PORT Q (PAIR 2X) VT-19		PORT R (PAIR 2X) VT-18		PORT S (PAIR 2X) VT-17				PORT	S	R	Q	P	
		BEN FRENCH		BEN FRENCH		BEN FRENCH		BEN FRENCH				MODE	BD	BD	BD	BD	
		CH 2	CH 1	CH 2	CH 1	CH 2	CH 1	CH 2	CH 1			TMG SRC	JIF PORT 1				
		TX ADD 96 RX ADD 95	TX ADD 94 RX ADD 93	TX ADD 92 RX ADD 91	TX ADD 90 RX ADD 89	TX ADD 96 RX ADD 95	TX ADD 94 RX ADD 93	TX ADD 92 RX ADD 91	TX ADD 90 RX ADD 89								
												PAIR 2X					
		CH X	CH Y	CH 1	CH 2	CH X	CH Y	CH 1	CH 2			L		R			
130V DC		87L-BF1 PR	87L-BF1 PR	87L-BF1 BU	87L-BF1 BU	87L-BF2 PR	87L-BF2 PR	87L-BF2 BU	87L-BF2 BU			PORT 2X					130V DC
PWR		NX64F	NX64F	NX64F	NX64F	NX64F	NX64F	NX64F	NX64F			CDAX		CDAX			PWR
1	2	3	4	5	6	7	8	9	10	11	12	13		14			15

JA CISCO GRID ROUTER

OC-48 SLOTS

JF PORTS	1	2	3	4	5	6	7
1	16	21	22	4			
2	17	18	19	20			
3							
4							

OC-48 CROSS-CONNECT TABLE

	PORT-X	CBW-A	CBW-B	CBW-C	CBW-D	CBW-E	CBW-F
		disabled	disabled	disabled	disabled	disabled	CBW-6
1							7,1
2							
3							
4	1,1,4						
5							
6							7,2
7							
8							
9							
10							
11							7,3
12							
13							
14							
15							
16	1,1,16						8,1
17	1,1,17						
18	1,1,18						
19	1,1,19						
20	1,1,20						
21	1,1,21						8,2
22	1,1,22						
23							
24							
25							
26							8,3
27							
28							

CDAX CROSS CONNECT TABLE (PAIR 1X)

CH	PORT S	PORT R	PORT Q	PORT P
	SHARE DROP (SD)	--	BULK DROP (BD)	BULK DROP (BD)
1	SLOT 1, CH 1			
2				
3				
4				
5				
6				
7	SLOT 4, CH 7			
8	SLOT 4, CH 8			
9				
10				
11				
12				
13				
14				
15				
16				
17				
18				
19				
20				
21				
22				
23				
24			SLOT 2, (VT #25)	SLOT 3, (VT #22)

CDAX CROSS CONNECT TABLE (PAIR 2X)

CH	PORT S	PORT R	PORT Q	PORT P
	BULK DROP (BD)	BULK DROP (BD)	BULK DROP (BD)	BULK DROP (BD)
1				
2				
3				
4				
5				
6				
7				
8				
9				
10				
11				
12	SLOT 1, (VT #17)	SLOT 2, (VT #18)	SLOT 3, (VT #19)	SLOT 4, (VT #20)
13				
14				
15				
16				
17				
18				
19				
20				
21				
22				
23				
24				

DATE	DRAWN BY	NO.	APPROVED BY	REVISION DESCRIPTION
06-20	SMW	1	PDK	CONFORMING TO CONSTRUCTION RECORDS
10-19	SMW	0	PDK	FOR CONSTRUCTION

BLACK HILLS ENERGY

WEST RAPID CITY SUBSTATION
PANEL DETAILS
FIBER (PANEL 1)

DRAWN BY SMW DATE 11-18
APPROVED BY PDK DATE 11-18
DWG NO. WRC-E-201A REVISION 1

DGR ENGINEERING
ROCK RAPIDS, IOWA
(712) 472-2531

P:\04233\00\DWG\RECORD\WRC\CAD\WRC-E-201A.DWG

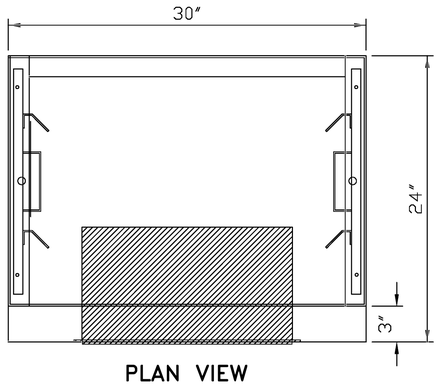

PLAN VIEW

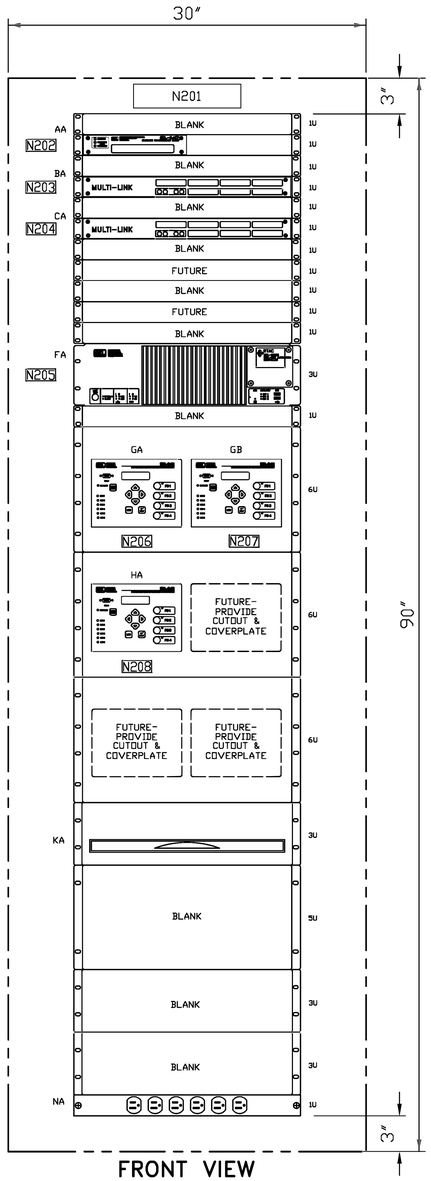

FRONT VIEW

BILL OF MATERIAL

ITEM	LOCATION	FUNCTION	DESCRIPTION	PA RTNO.	MANUFACTURER	QTY.
1	–	–	90″ x 30″ x 24″ FREESTANDING PANEL			1
2	AA	CLOCK	SATELLITE-SYNCHRONIZED CLOCK	2407#0101	SEL	1
3	BA,CA	ETH SW #1,#2	ETHERNET SWITCH	ML3001BHHXAAAAAAAGX	GE	2
4	FA	RTU	REAL TIME AUTOMATION CONTROLLER (RTAC)	3555#GHHJ	SEL	1
5	GA,GB,HA	RIO-1,2,3	PROGRAMMABLE AUTOMATION CONTROLLER	241101A3A3A3A3A0140 KEY:0299	SEL	3
6	KA	SHELF	RACK MOUNT, SLIDING SHELF	RMTS06B	BLACK BOX	1
7	NA	RECPT2	RACK MOUNT, FRONT ACCESS, 6-OUTLET POWER STRIP	RS-0615-F	TRIPPLITE	1
8	–	TB	600 V, 30 AMP, 12-POINT TERMINAL BLOCK	EB25B12	GE	**
9	–	CB	2 POLE, 125/250 VDC MAX. MOLDED CASE CIRCUIT BREAKER, 15A	FAZ-C15/2-NA-DC	EATON	10
10	BUS	GND	1″ x 27″ x 1/4″ COPPER GROUND BAR	–	–	1
			** AS NEEDED			

NAMEPLATE ENGRAVING SCHEDULE

No.	SIZE	TEXT HEIGHT	LINE No. 1	TEXT HEIGHT	LINE No. 2	TEXT HEIGHT	LINE No. 3	QTY.
N201	2″ x 9″	3/4″	PANEL 2	3/8″	COMMUNICATION	3/8″	PANEL (COMM)	2
N202	1″ x 2 1/2″	5/16″	CLOCK	3/16″	SATELLITE	3/16″	CLOCK	1
N203	1″ x 2 1/2″	5/16″	ETH SW #1	3/16″	ETHERNET	3/16″	SWITCH #1	1
N204	1″ x 2 1/2″	5/16″	ETH SW #2	3/16″	ETHERNET	3/16″	SWITCH #2	1
N205	1″ x 2 1/2″	5/16″	RTU	3/16″	RTAC	3/16″	SEL-3555	1
N206	1″ x 2 1/2″	5/16″	RIO-1	3/16″	ALARM	3/16″	PROCESSOR #1	1
N207	1″ x 2 1/2″	5/16″	RIO-2	3/16″	ALARM	3/16″	PROCESSOR #2	1
N208	1″ x 2 1/2″	5/16″	RIO-3	3/16″	ALARM	3/16″	PROCESSOR #3	1

NOTES:

1. THE PANEL COLOR SHALL BE ANSI 61 GRAY.
2. THE NAMEPLATES SHALL BE MADE OF LAMINATED PHENOLIC ENGRAVING STOCK AND SHALL UTILIZE LETTERING THAT IS STANDARD ROMAN OR SANS SERIF PRINT STYLES, UNLESS NOTED OTHERWISE.
3. ALL NAMEPLATES SHALL BE BLACK WITH WHITE CORE AND UTILIZE 3/16″ LETTERING, UNLESS NOTED OTHERWISE.
4. EACH NAMEPLATE SHALL BE AFFIXED TO THE PANEL AT THE LOCATIONS SHOWN ON THE PANEL LAYOUT AND THEIR CORRESPONDING NAMEPLATE LABELING DETAIL.
5. MAIN PANEL NAMEPLATE SHALL BE AFFIXED TO THE BACK OF THE PANEL NEAR THE TOP OF THE PANEL.

P:\04233\000\DWG\RECORD\WRC\CAD\WRC-E-202.DWG

DGR ENGINEERING
ROCK RAPIDS, IOWA
(712) 472-2531

DATE	DRAWN BY	NO.	APPROVED BY	REVISION DESCRIPTION
06-20	SMW	1	PDK	CONFORMING TO CONSTRUCTION RECORDS
10-19	SMW	0	PDK	FOR CONSTRUCTION

BLACK HILLS ENERGY

WEST RAPID CITY SUBSTATION
PANEL LAYOUT
COMM (PANEL 2)

DRAWN BY SMW DATE 11-18
APPROVED BY PDK DATE 11-18

DWG NO. WRC-E-202 REVISION NO. 1

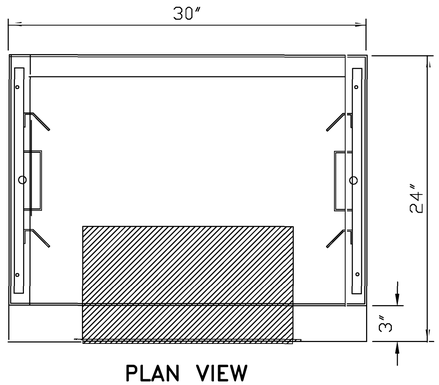

PLAN VIEW

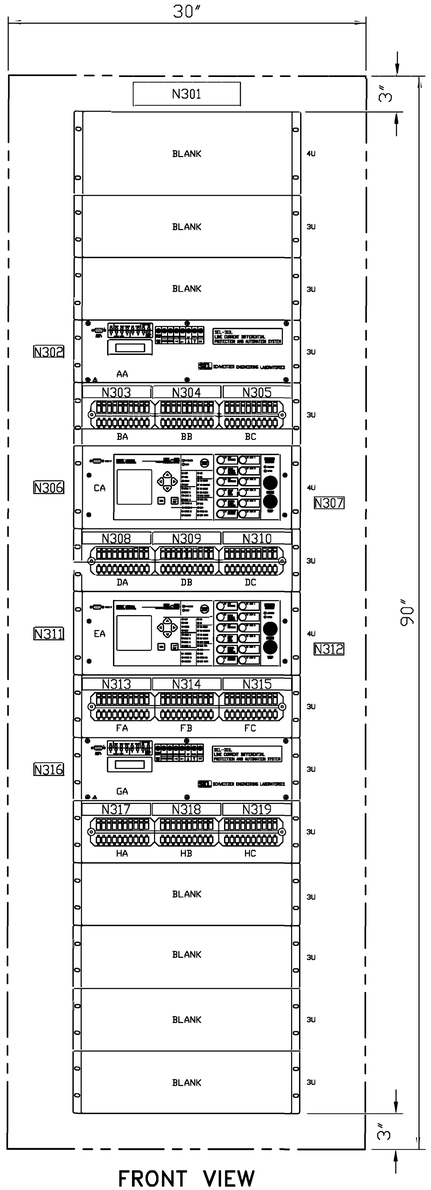

FRONT VIEW

BILL OF MATERIAL						
ITEM NO.	LOCATION	FUNCTION	DESCRIPTION	PART NO.	MANUFACTURER	QTY
01	---	---	90"X30"X24" FREESTANDING PANEL	---	---	1
02	AA	87L-LNG	LINE CURRENT DIFFERENTIAL SYSTEM	0311L1HCC3254X4XX KEY:0098	SEL	1
03	BA,BB,BC	TS1,TS2,TS3	RACK MOUNT TEST SWITCH ASSEMBLY WITH 3 10-POLE TEST SWITCHES (FMS-10FF, FMS-10FF, FMS-10A1) AND CLEAR COVER	293RG-330HI	STATES	1
04	CA	21L-LNG	PROTECTION, AUTOMATION AND CONTROL SYSTEM	04214415XC0X4H3B4XXXX KEY:6136	SEL	1
05	DA,DB,DC	TS4,TS5,TS6	RACK MOUNT TEST SWITCH ASSEMBLY WITH 3 10-POLE TEST SWITCHES (FMS-10FF, FMS-10FF, FMS-10A1) AND CLEAR COVER	293RG-330HI	STATES	1
06	EA	21L-SRC	PROTECTION, AUTOMATION AND CONTROL SYSTEM	04214415XC0X4H3B4XXXX KEY:6136	SEL	1
07	FA,FB,FC	TS7,TS8,TS9	RACK MOUNT TEST SWITCH ASSEMBLY WITH 3 10-POLE TEST SWITCHES (FMS-10FF, FMS-10FF, FMS-10A1) AND CLEAR COVER	293RG-330HI	STATES	1
08	GA	87L-SRC	LINE CURRENT DIFFERENTIAL SYSTEM	0311L1HCC3254X4XX KEY:0098	SEL	1
09	HA,HB,HC	TS10,TS11,TS12	RACK MOUNT TEST SWITCH ASSEMBLY WITH 3 10-POLE TEST SWITCHES (FMS-10FF, FMS-10FF, FMS-10A1) AND CLEAR COVER	293RG-330HI	STATES	1
10	---	CB	2-POLE SCREW TERMINAL, 15 AMP MAGNETIC CIRCUIT BREAKER	FAZ-C15/2-NA-DC	EATON	4
11	---	TB	600 V, 30 AMP, 12-POINT TERMINAL BLOCK	EB25B12	GE	**
12	---	STB	600 V, 30 AMP, 12-POINT SHORTING BLOCK	EB27B12S	GE	**
13	---	FU	250 V, 30 AMP, 1-POLE CLASS H FUSE BLOCK	HM25030-1SR	BUSSMAN	2
14	---	FU	250 V, 30 AMP, 3-POLE CLASS H FUSE BLOCK	HM25030-3SR	BUSSMAN	4
15	BUS	GND	1"X27"X1/4" COPPER GROUND BAR	---	---	1
			** AS NEEDED			

NAMEPLATE ENGRAVING SCHEDULE								
No.	SIZE	TEXT HEIGHT	LINE No. 1	TEXT HEIGHT	LINE No. 2	TEXT HEIGHT	LINE No. 3	QTY.
N301	2" x 9"	3/4"	PANEL 3	3/8"	230KV LINES	3/8"	LNG & SRC	1
N302	1" x 2 1/2"	5/16"	87L-LNG	3/16"	LANGE	3/16"	PRIMARY RELAY	1
N303	1" x 5 3/4"	1/8"	SEE DETAIL A - WRC-E-203A					1
N304	1" x 5 3/4"	1/8"	SEE DETAIL B - WRC-E-203A					1
N305	1" x 5 3/4"	1/8"	SEE DETAIL C - WRC-E-203A					1
N306	1" x 2 1/2"	5/16"	21L-LNG	3/16"	LANGE	3/16"	BACKUP RELAY	1
N307	1" x 2 1/2"	5/16"	23467	3/16"	BREAKER	3/16"	CONTROL	1
N308	1" x 5 3/4"	1/8"	SEE DETAIL D - WRC-E-203A					1
N309	1" x 5 3/4"	1/8"	SEE DETAIL E - WRC-E-203A					1
N310	1" x 5 3/4"	1/8"	SEE DETAIL F - WRC-E-203A					1
N311	1" x 2 1/2"	5/16"	21L-SRC	3/16"	SOUTH RC	3/16"	BACKUP RELAY	1
N312	1" x 2 1/2"	5/16"	23470	3/16"	BREAKER	3/16"	CONTROL	1
N313	1" x 5 3/4"	1/8"	SEE DETAIL G - WRC-E-203A					1
N314	1" x 5 3/4"	1/8"	SEE DETAIL H - WRC-E-203A					1
N315	1" x 5 3/4"	1/8"	SEE DETAIL I - WRC-E-203A					1
N316	1" x 2 1/2"	5/16"	87L-SRC	3/16"	SOUTH RC	3/16"	PRIMARY RELAY	1
N317	1" x 5 3/4"	1/8"	SEE DETAIL J - WRC-E-203A					1
N318	1" x 5 3/4"	1/8"	SEE DETAIL K - WRC-E-203A					1
N319	1" x 5 3/4"	1/8"	SEE DETAIL L - WRC-E-203A					1

NOTES:

1. THE PANEL COLOR SHALL BE ANSI 61 GRAY.
2. THE NAMEPLATES SHALL BE MADE OF LAMINATED PHENOLIC ENGRAVING STOCK AND SHALL UTILIZE LETTERING THAT IS STANDARD ROMAN OR SANS SERIF PRINT STYLES, UNLESS NOTED OTHERWISE.
3. ALL NAMEPLATES SHALL BE BLACK WITH WHITE CORE AND UTILIZE 3/16" LETTERING, UNLESS NOTED OTHERWISE.
4. EACH NAMEPLATE SHALL BE AFFIXED TO THE PANEL AT THE LOCATIONS SHOWN ON THE PANEL LAYOUT AND THEIR CORRESPONDING NAMEPLATE LABELING DETAIL.
5. MAIN PANEL NAMEPLATE SHALL BE AFFIXED TO THE BACK OF THE PANEL NEAR THE TOP OF THE PANEL.

P:\04233\00\DWG\RECORD\WRC\CAD\WRC-E-203.DWG

DGR ENGINEERING
ROCK RAPIDS, IOWA
(712) 472-2531

DATE	DRAWN BY	NO.	APPROVED BY	REVISION DESCRIPTION
06-20	SMW	1	PDK	CONFORMING TO CONSTRUCTION RECORDS
10-19	SMW	0	PDK	FOR CONSTRUCTION

BLACK HILLS ENERGY

WEST RAPID CITY SUBSTATION
PANEL LAYOUT
230 kV LINES LNG & SRC (PANEL 3)

DRAWN BY SMW DATE 11-18
APPROVED BY PDK DATE 11-18

DWG NO. WRC-E-203 REVISION 1

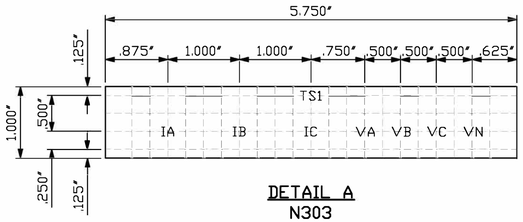

DETAIL A
N303

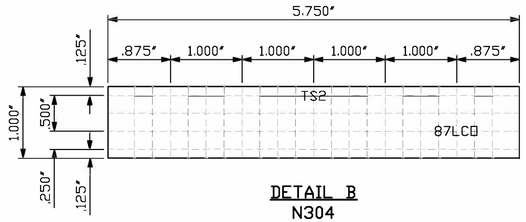

DETAIL B
N304

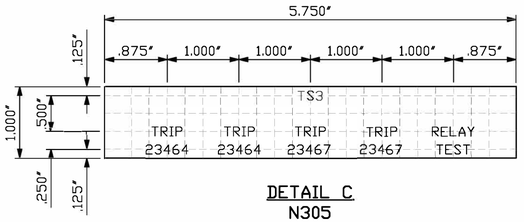

DETAIL C
N305

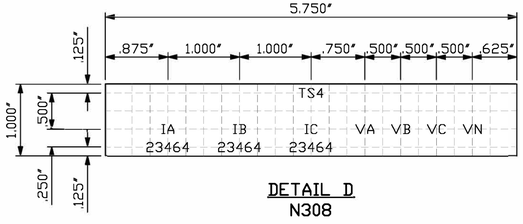

DETAIL D
N308

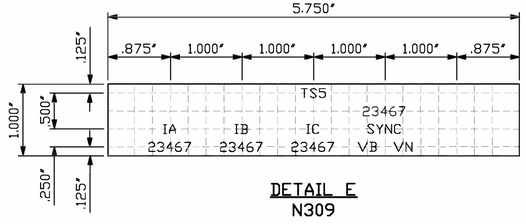

DETAIL E
N309

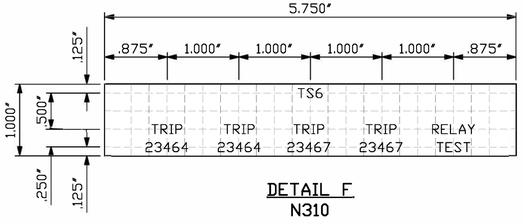

DETAIL F
N310

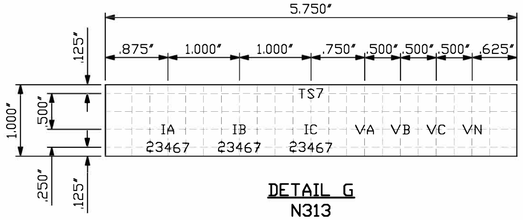

DETAIL G
N313

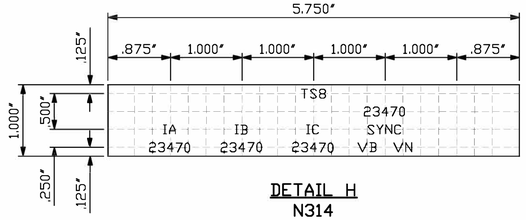

DETAIL H
N314

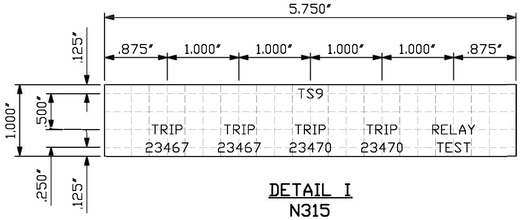

DETAIL I
N315

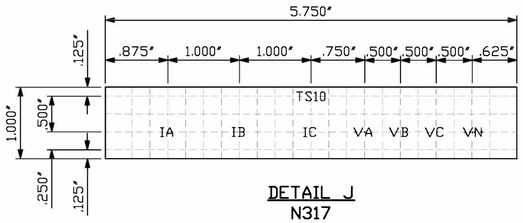

DETAIL J
N317

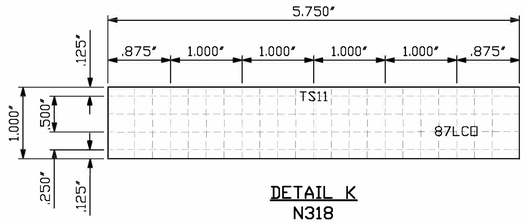

DETAIL K
N318

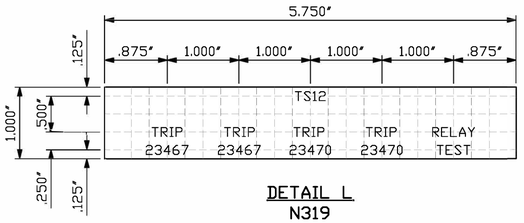

DETAIL L
N319

NOTES:
1. THE NAMEPLATES SHALL BE MADE OF LAMINATED PHENOLIC ENGRAVING STOCK AND SHALL UTILIZE LETTERING THAT IS STANDARD ROMAN OR SANS SERIF PRINT STYLES, UNLESS NOTED OTHERWISE.
2. ALL NAMEPLATES SHALL BE BLACK WITH WHITE CORE AND UTILIZE 3/16" LETTERING, UNLESS NOTED OTHERWISE.
3. EACH NAMEPLATE SHALL BE AFFIXED TO THE PANEL AT THE LOCATIONS SHOWN ON THE PANEL LAYOUT AND THEIR CORRESPONDING NAMEPLATE LABELING DETAIL.

P:\04033\00\DWG\RECORD\WRC\CAD\WRC-E-203A.DWG

DGR ENGINEERING
ROCK RAPIDS, IOWA
(712) 472-2531

DATE	DRAWN BY	NO.	APPROVED BY	REVISION DESCRIPTION
06-20	SMW	1	PJK	CONFORMING TO CONSTRUCTION RECORDS
10-19	SMW	0	PJK	FOR CONSTRUCTION

BLACK HILLS ENERGY

WEST RAPID CITY SUBSTATION
NAMEPLATE DETAILS
230 kV LINES LNG & SRC (PANEL 3)

DRAWN BY SMW DATE 11-18
APPROVED BY PJK DATE 11-18
DWG NO. WRC-E-203A REVISION 1

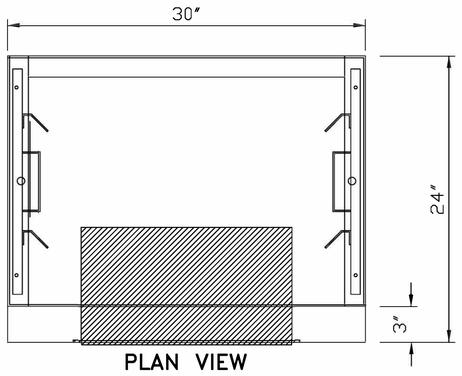

PLAN VIEW

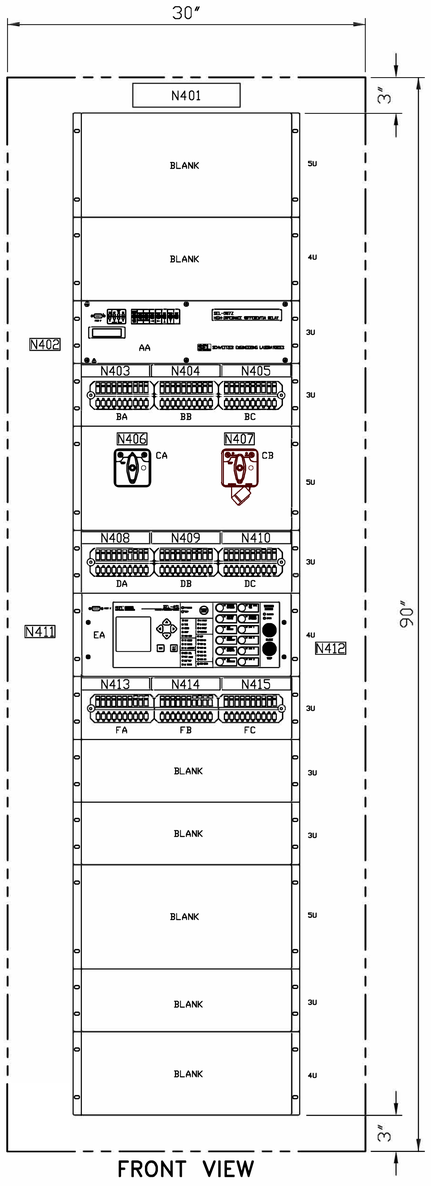

FRONT VIEW

BILL OF MATERIAL

ITEM	LOCATION	FUNCTION	DESCRIPTION	PART NO.	MANUFACTURER	QTY.
01	–	–	90″ x 30″ x 24″ FREESTANDING PANEL			1
02	AA	87BT1	HIGH IMPEDANCE DIFFERENTIAL RELAY	0587ZOX315H2XX KEY:7857	SEL	1
03	BA, BB, BC DA, DB, DC	TS1, TS2, TS3 TS4, TS5, TS6	RACK MOUNT TEST SWITCH ASSEMBLY WITH 3 10-POLE TEST SWITCHES (FMS-10FF, FMS-10A1, FMS-10A1) AND CLEAR COVER	293RG-330CN	STATES	2
04	CA	87BT1CO	SERIES 24 BUS DIFFERENTIAL CUTOUT SWITCH, 4-DECK, WITH 125VDC AMBER (OFF) LED & ENGRAVED NAMEPLATE: TITLE – BUS DIFF POS. 1-OFF POS. 2-ON	24PA204NJ	ELECTROSWITCH	1
05	CB	86BT1	SERIES 24 LOCKOUT RELAY	78PB10D	ELECTROSWITCH	1
06	EA	51HT1	PROTECTION, AUTOMATION AND CONTROL SYSTEM	045154I5XC0X4H3B4XXXX KEY:6150	SEL	1
07	FA, FB, FC	TS7,TS8,TS9	RACK MOUNT TEST SWITCH ASSEMBLY WITH 3 10-POLE TEST SWITCHES (FMS-10FF, FMS-10FF, FMS-10A1) AND CLEAR COVER	293RG-330HI	STATES	1
08	–	TB	600 V, 30 AMP, 12-POINT TERMINAL BLOCK	EB25B12	GE	**
09	–	STB	600 V, 30 AMP, 12-POINT SHORTING BLOCK	EB27B12S	GE	**
10	–	CB	2-POLE SCREW TERMINAL, 15 AMP MAGNETIC CIRCUIT BREAKER	FAZ-C15/2-NA-DC	EATON	2
11	–	FU	250 V, 30 AMP, 1-POLE CLASS H FUSE BLOCK	HM25030-1RS	BUSSMAN	1
12	–	FU	250 V, 30 AMP, 3-POLE CLASS H FUSE BLOCK	HM25030-3SR	BUSSMAN	1
13	BUS	GND	1″ X 27″ X 14″ COPPER GROUND BAR	---	---	1
			** AS NEEDED			

NAMEPLATE ENGRAVING SCHEDULE

No.	SIZE	TEXT HEIGHT	LINE No. 1	TEXT HEIGHT	LINE No. 2	TEXT HEIGHT	LINE No. 3	QTY.
N401	2″ x 9″	3/4″	PANEL 4	3/8″	230 kV BUS T1	3/8″	T1 HS OC	1
N402	1″ x 3″	5/16″	87BT1	3/16″	230 kV BUS T1	3/16″	DIFF RELAY	1
N403	1″ x 5 3/4″	1/8″	SEE DETAIL A – WRC-E-204A					1
N404	1″ x 5 3/4″	1/8″	SEE DETAIL B – WRC-E-204A					1
N405	1″ x 5 3/4″	1/8″	SEE DETAIL C – WRC-E-204A					1
N406	1″ x 3″	5/16″	87BT1CO	3/16″	230 kV BUS T1	3/16″	DIFF CUTOUT	1
N407	1″ x 3″	5/16″	86BT1	3/16″	230 kV BUS T1	3/16″	DIFF LOCKOUT	1
N408	1″ x 5 3/4″	1/8″	SEE DETAIL D – WRC-E-204A					1
N409	1″ x 5 3/4″	1/8″	SEE DETAIL E – WRC-E-204A					1
N410	1″ x 5 3/4″	1/8″	SEE DETAIL F – WRC-E-204A					1
N411	1″ x 2 1/2″	5/16″	51HT1	3/16″	XFMR T1	3/16″	HIGH SIDE OC RELAY	1
N412	1″ x 2 1/2″	5/16″	23464	3/16″	BREAKER	3/16″	CONTROL	1
N413	1″ x 5 3/4″	1/8″	SEE DETAIL H – WRC-E-204A					1
N414	1″ x 5 3/4″	1/8″	SEE DETAIL I – WRC-E-204A					1
N415	1″ x 5 3/4″	1/8″	SEE DETAIL J – WRC-E-204A					1

NOTES:

1. THE PANEL COLOR SHALL BE ANSI 61 GRAY.
2. THE NAMEPLATES SHALL BE MADE OF LAMINATED PHENOLIC ENGRAVING STOCK AND SHALL UTILIZE LETTERING THAT IS STANDARD ROMAN OR SANS SERIF PRINT STYLES, UNLESS NOTED OTHERWISE.
3. ALL NAMEPLATES SHALL BE BLACK WITH WHITE CORE AND UTILIZE 3/16″ LETTERING, UNLESS NOTED OTHERWISE.
4. EACH NAMEPLATE SHALL BE AFFIXED TO THE PANEL AT THE LOCATIONS SHOWN ON THE PANEL LAYOUT AND THEIR CORRESPONDING NAMEPLATE LABELING DETAIL.
5. MAIN PANEL NAMEPLATE SHALL BE AFFIXED TO THE BACK OF THE PANEL NEAR THE TOP OF THE PANEL.

P:\04023\00\DWG\RECORD\WRC\CAD\WRC-E-204.DWG

DGR ENGINEERING
ROCK RAPIDS, IOWA
(712) 472-2531

DATE	DRAWN BY	NO.	APPROVED BY	REVISION DESCRIPTION
06-20	SMW	1	PJK	CONFORMING TO CONSTRUCTION RECORDS
10-19	SMW	0	PJK	FOR CONSTRUCTION

BLACK HILLS ENERGY

WEST RAPID CITY SUBSTATION
PANEL LAYOUT
230 kV BUS T1 & T1 HS OC
(PANEL 4)

DRAWN BY SMW DATE 11-18
APPROVED BY PJK DATE 11-18

DWG NO. WRC-E-204 REVISION 1

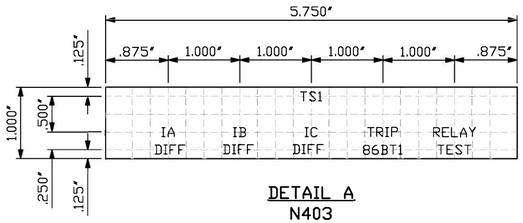

DETAIL A
N403

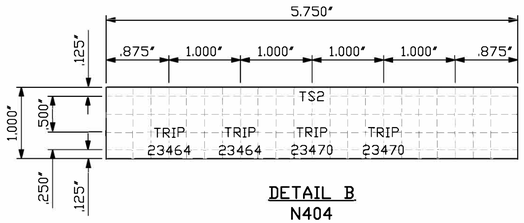

DETAIL B
N404

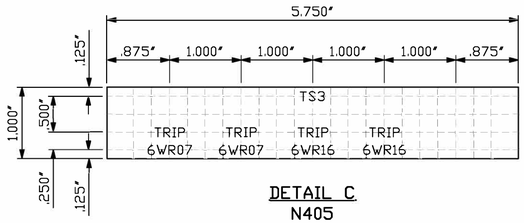

DETAIL C
N405

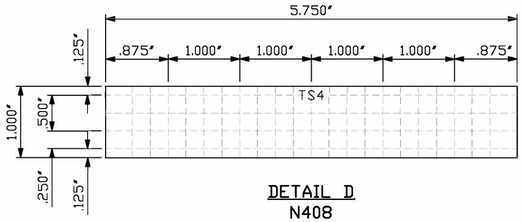

DETAIL D
N408

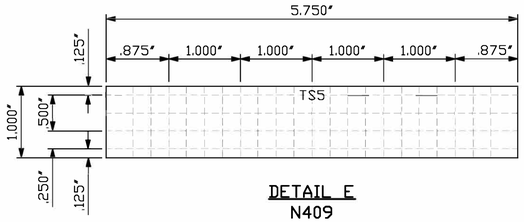

DETAIL E
N409

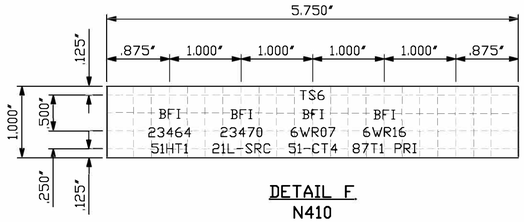

DETAIL F
N410

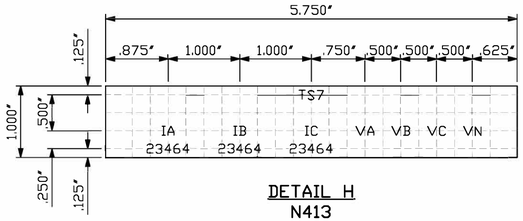

DETAIL H
N413

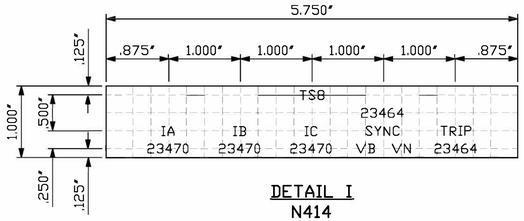

DETAIL I
N414

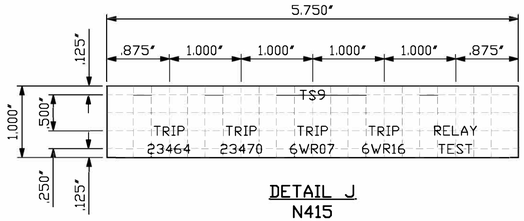

DETAIL J
N415

NOTES:

1. THE NAMEPLATES SHALL BE MADE OF LAMINATED PHENOLIC ENGRAVING STOCK AND SHALL UTILIZE LETTERING THAT IS STANDARD ROMAN OR SANS SERIF PRINT STYLES, UNLESS NOTED OTHERWISE.

2. ALL NAMEPLATES SHALL BE BLACK WITH WHITE CORE AND UTILIZE 3/16" LETTERING, UNLESS NOTED OTHERWISE.

3. EACH NAMEPLATE SHALL BE AFFIXED TO THE PANEL AT THE LOCATIONS SHOWN ON THE PANEL LAYOUT AND THEIR CORRESPONDING NAMEPLATE LABELING DETAIL.

P:\04023\00\DWG\RECORD\WRC\CAD\WRC-E-204A.DWG

DGR ENGINEERING
ROCK RAPIDS, IOWA
(712) 472-2531

DATE	DRAWN BY	NO.	APPROVED BY	REVISION DESCRIPTION
06-20	SMW	1	PDK	CONFORMING TO CONSTRUCTION RECORDS
10-19	SMW	0	PDK	FOR CONSTRUCTION

BLACK HILLS ENERGY

WEST RAPID CITY SUBSTATION
NAMEPLATE DETAILS
230 kV BUS T1 & T1 HS OC
(PANEL 4)

DRAWN BY SMW DATE 11-18
APPROVED BY PDK DATE 11-18
DWG NO. WRC-E-204A
REVISION 1

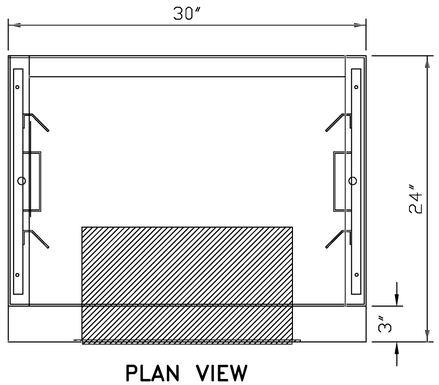

PLAN VIEW

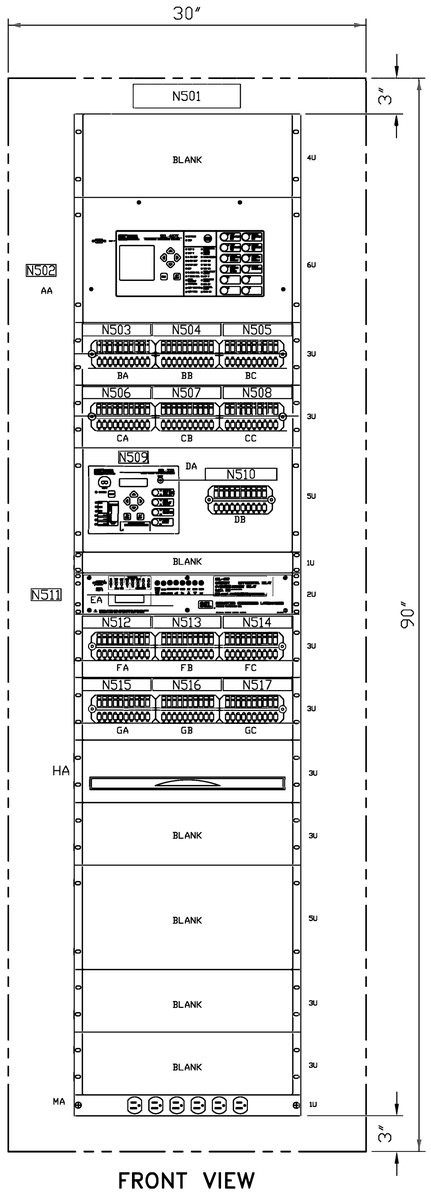

FRONT VIEW

BHE TO FURNISH ITEM 16

BILL OF MATERIAL

ITEM	LOCATION	FUNCTION	DESCRIPTION	PART NO.	MANUFACTURER	QTY
N/A	---	---	90"X30"X24" FREESTANDING PANEL	---	---	1
01	AA	87T1 PRI	TRANSFORMER PROTECTION RELAY	0487E3X411XXC0X4H624XXX KEY0867	SEL	1
02	BA,BB,BC FA,FB,FC	TS1,TS2,TS3 TS8,TS9,TS10	RACK MOUNT TEST SWITCH ASSEMBLY WITH 3 10-POLE TEST SWITCHES (FMS-10FF, FMS-10FF, FMS-10FF) AND CLEAR COVER	293RG-330DM	STATES	2
03	CA,CB,CC GA,GB,GC	TS4,TS5,TS6 TS11,TS12,TS13	RACK MOUNT TEST SWITCH ASSEMBLY WITH 3 10-POLE TEST SWITCHES (FMS-10FF, FMS-10FF, FMS-10AI) AND CLEAR COVER	293RG-330HI	STATES	2
04	DA	MTR-T1	ADVANCED METERING SYSTEM	0735HX10944CGXCXXX1610XX KEY1730	SEL	1
05	DB	TS7	10-POLE TEST SWITCH WITH CLEAR COVER	2FMS-10E1	STATES	1
06	EA	87T1 BU	CURRENT DIFFERENTIAL AND OVERCURRENT RELAY	0387S04XSHXX4X1 KEY8023	SEL	1
07	HA	SHELF	RACK MOUNT, SLIDING SHELF	RTMSD6B	BLACK BOX	1
08	-	43P1	POWER RELAY, 3 PDT, 125VDC, 10A	B255XCXP-125VDC	STRUTHERS-DUNN	1
09	-	SOCKET	RELAY SOCKET	27390	STRUTHERS-DUNN	1
10	MA	RECPT7	RACK MOUNT, FRONT ACCESS, 6-OUTLET POWER STRIP	RS-0615-F	TRIPPLITE	1
11	-	CB	2 POLE, 125/250 VDC MAX. MOLDED CASE CIRCUIT BREAKER, 15A	FAZ-C15/2-NA-DC	EATON	4
12	-	TB	600 V, 30 AMP, 12-POINT TERMINAL BLOCK	EB25B12	GE	**
13	-	STB	600 V, 30 AMP, 12-POINT SHORTING BLOCK	EB27B12S	GE	**
14	-	FU	250 V, 30 AMP, 1-POLE CLASS H FUSE BLOCK	HM25030-1SR	BUSSMAN	2
15	-	FU	250 V, 30 AMP, 3-POLE CLASS H FUSE BLOCK	HM25030-3SR	BUSSMAN	1
16	-	XCVR/87T1	FIBER OPTIC FOR SEL-487E	2814M0	SEL	1
N/A	BUS	GND	1"X27"X1/4" COPPER GROUND BAR	---	---	1
			** AS NEEDED			

NAMEPLATE ENGRAVING SCHEDULE

No.	SIZE	TEXT HEIGHT	LINE No. 1	TEXT HEIGHT	LINE No. 2	TEXT HEIGHT	LINE No. 3	QTY.
N501	2" x 9"	3/4"	PANEL 5	3/8"	230/69 kV	3/8"	XFMR T1	2
N502	1" x 2 1/2"	5/16"	87T1 PRI	3/16"	XFMR T1	3/16"	DIFF RELAY	1
N503	1" x 5 3/4"	1/8"	SEE DETAIL A - WRC-E-205A					1
N504	1" x 5 3/4"	1/8"	SEE DETAIL B - WRC-E-205A					1
N505	1" x 5 3/4"	1/8"	SEE DETAIL C - WRC-E-205A					1
N506	1" x 5 3/4"	1/8"	SEE DETAIL D - WRC-E-205A					1
N507	1" x 5 3/4"	1/8"	SEE DETAIL E - WRC-E-205A					1
N508	1" x 5 3/4"	1/8"	SEE DETAIL F - WRC-E-205A					1
N509	1" x 2 1/2"	5/16"	MTR-T1	3/16"	XFMR T1	3/16"	METER	1
N510	1" x 5 3/4"	1/8"	SEE DETAIL G - WRC-E-205A					1
N511	1" x 2 1/2"	5/16"	87T1 BU	3/16"	XFMR T1 DIFF	3/16"	BACKUP RELAY	1
N512	1" x 5 3/4"	1/8"	SEE DETAIL H - WRC-E-205A					1
N513	1" x 5 3/4"	1/8"	SEE DETAIL I - WRC-E-205A					1
N514	1" x 5 3/4"	1/8"	SEE DETAIL J - WRC-E-205A					1
N515	1" x 5 3/4"	1/8"	SEE DETAIL K - WRC-E-205A					1
N516	1" x 5 3/4"	1/8"	SEE DETAIL L - WRC-E-205A					1
N517	1" x 5 3/4"	1/8"	SEE DETAIL M - WRC-E-205A					1

NOTES:

1. THE PANEL COLOR SHALL BE ANSI 61 GRAY.
2. THE NAMEPLATES SHALL BE MADE OF LAMINATED PHENOLIC ENGRAVING STOCK AND SHALL UTILIZE LETTERING THAT IS STANDARD ROMAN OR SANS SERIF PRINT STYLES, UNLESS NOTED OTHERWISE.
3. ALL NAMEPLATES SHALL BE BLACK WITH WHITE CORE AND UTILIZE 3/16" LETTERING, UNLESS NOTED OTHERWISE.
4. EACH NAMEPLATE SHALL BE AFFIXED TO THE PANEL AT THE LOCATIONS SHOWN ON THE PANEL LAYOUT AND THEIR CORRESPONDING NAMEPLATE LABELING DETAIL.
5. MAIN PANEL NAMEPLATE SHALL BE AFFIXED TO THE BACK OF THE PANEL NEAR THE TOP OF THE PANEL.

P:\04233\00\DWG\RECORD\WRC\CAD\WRC-E-205.DWG

DGR ENGINEERING
ROCK RAPIDS, IOWA
(712) 472-2531

DATE	DRAWN BY	NO.	APPROVED BY	REVISION DESCRIPTION
06-20	SMW	1	PDK	CONFORMING TO CONSTRUCTION RECORDS
10-19	SMW	0	PDK	FOR CONSTRUCTION

BLACK HILLS ENERGY

WEST RAPID CITY SUBSTATION
PANEL LAYOUT
230/69 kV XFMR T1 (PANEL 5)

DRAWN BY SMW DATE 11-18
APPROVED BY PDK DATE 11-18
DWG NO. WRC-E-205 REVISION 1

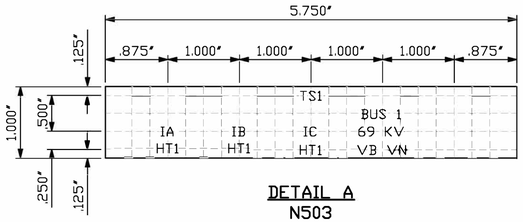

DETAIL A
N503

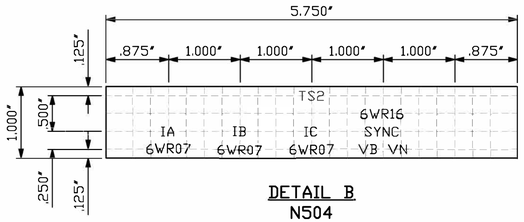

DETAIL B
N504

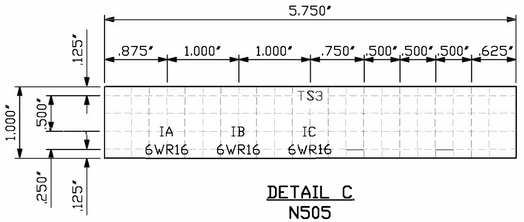

DETAIL C
N505

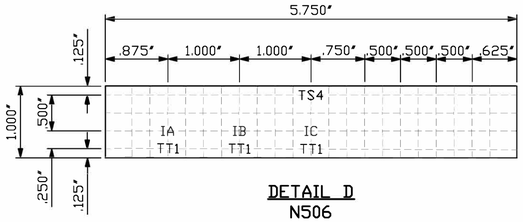

DETAIL D
N506

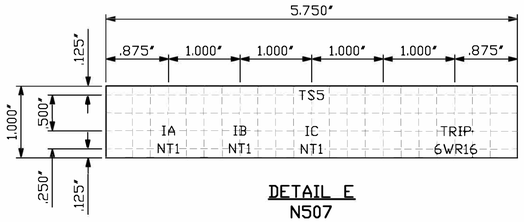

DETAIL E
N507

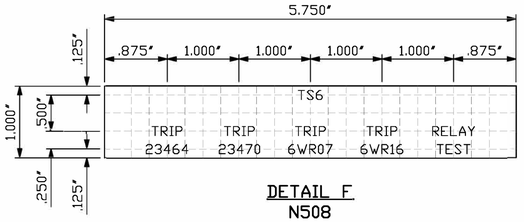

DETAIL F
N508

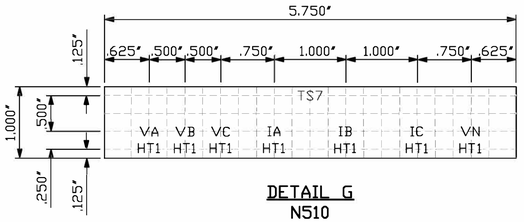

DETAIL G
N510

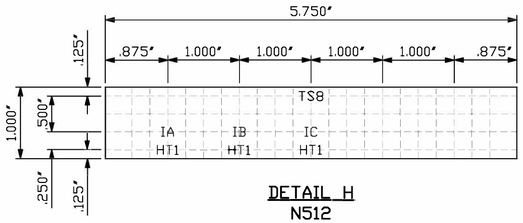

DETAIL H
N512

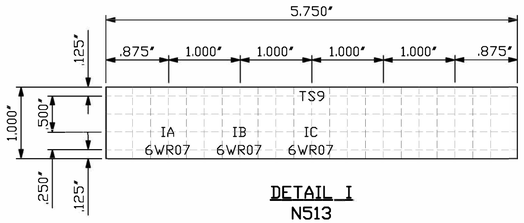

DETAIL I
N513

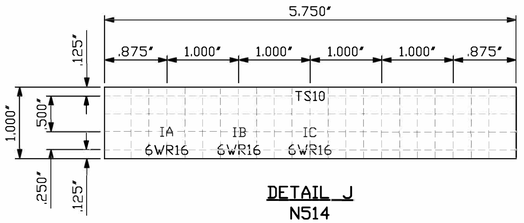

DETAIL J
N514

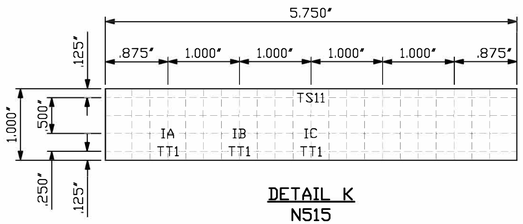

DETAIL K
N515

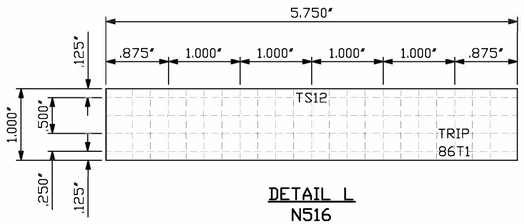

DETAIL L
N516

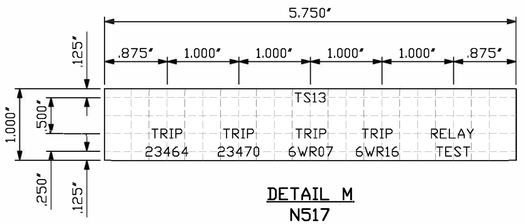

DETAIL M
N517

NOTES:
1. THE NAMEPLATES SHALL BE MADE OF LAMINATED PHENOLIC ENGRAVING STOCK AND SHALL UTILIZE LETTERING THAT IS STANDARD ROMAN OR SANS SERIF PRINT STYLES, UNLESS NOTED OTHERWISE.
2. ALL NAMEPLATES SHALL BE BLACK WITH WHITE CORE AND UTILIZE 3/16" LETTERING, UNLESS NOTED OTHERWISE.
3. EACH NAMEPLATE SHALL BE AFFIXED TO THE PANEL AT THE LOCATIONS SHOWN ON THE PANEL LAYOUT AND THEIR CORRESPONDING NAMEPLATE LABELING DETAIL.

P:\04023\00\DWG\RECORD\WRC\CAD\WRC-E-205A.DWG

DGR ENGINEERING
ROCK RAPIDS, IOWA
(712) 472-2531

DATE	DRAWN BY	NO.	APPROVED BY	REVISION DESCRIPTION
06-20	SMW	1	PDK	CONFORMING TO CONSTRUCTION RECORDS
10-19	SMW	0	PDK	FOR CONSTRUCTION

BLACK HILLS ENERGY

WEST RAPID CITY SUBSTATION
NAMEPLATE DETAILS
230/69 kV XFMR T1 (PANEL 5)

DRAWN BY SMW DATE 1-1-18
APPROVED BY PDK DATE 11-18
DWG NO. WRC-E-205A SECTION 1 NO

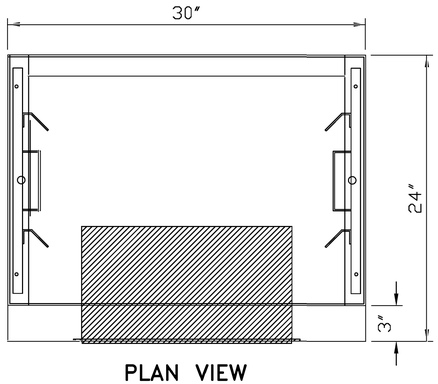

PLAN VIEW

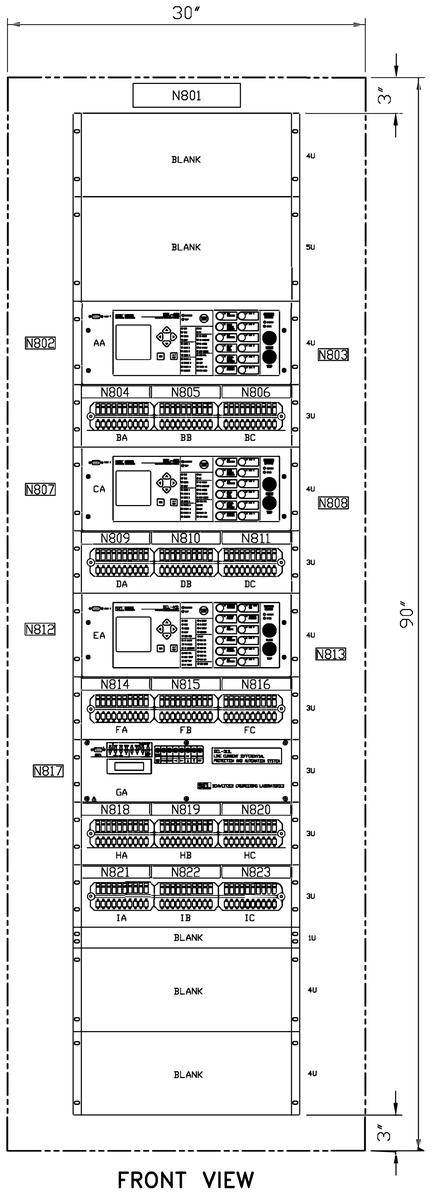

FRONT VIEW

BILL OF MATERIAL						
ITEM NO.	LOCATION	FUNCTION	DESCRIPTION	PART NO.	MANUFACTURER	QTY
01	---	---	90"X30"X24" FREESTANDING PANEL	---	---	1
02	AA	21L-LNG69 PR	PROTECTION, AUTOMATION AND CONTROL SYSTEM	04214415XC0X4H3B4XXXX KEY:6136	SEL	1
03	BA,BB,BC	TS1,TS2,TS3	RACK MOUNT TEST SWITCH ASSEMBLY WITH 3 10-POLE TEST SWITCHES (FMS-10FF, FMS-10FF, FMS-10A1) AND CLEAR COVER	293RG-330HI	STATES	1
04	CA	21L-LNG69 BU	PROTECTION, AUTOMATION AND CONTROL SYSTEM	04214415XC0X4H3B4XXXX KEY:6136	SEL	1
05	DA,DB,DC	TS4,TS5,TS6	RACK MOUNT TEST SWITCH ASSEMBLY WITH 3 10-POLE TEST SWITCHES (FMS-10FF, FMS-10FF, FMS-10A1) AND CLEAR COVER	293RG-330HI	STATES	1
06	EA	51-CT4	PROTECTION, AUTOMATION AND CONTROL SYSTEM	04515415XC0X4H3B4XXXX KEY:6150	SEL	1
07	FA,FB,FC	TS7,TS8,TS9	RACK MOUNT TEST SWITCH ASSEMBLY WITH 3 10-POLE TEST SWITCHES (FMS-10FF, FMS-10FF, FMS-10A1) AND CLEAR COVER	293RG-330HI	STATES	1
08	GA	87L-CT4	LINE CURRENT DIFFERENTIAL SYSTEM	0311L1HDD3254X4XX KEY:0115	SEL	1
09	HA,HB,HC	TS10,TS11,TS12	RACK MOUNT TEST SWITCH ASSEMBLY WITH 3 10-POLE TEST SWITCHES (FMS-10FF, FMS-10FF, FMS-10A1) AND CLEAR COVER	293RG-330HI	STATES	1
10	IA,IB,IC	TS13,TS14,TS15	RACK MOUNT TEST SWITCH ASSEMBLY WITH 3 10-POLE TEST SWITCHES (FMS-10A1, FMS-10A1, FMS-10A1) W/CLEAR COVER	293RG-330J	STATES	1
11	---	CB	2-POLE SCREW TERMINAL, 15 AMP MAGNETIC CIRCUIT BREAKER	FAZ-C15/2-NA-DC	EATON	4
12	---	TB	600 V, 30 AMP, 12-POINT TERMINAL BLOCK	EB25B12	GE	**
13	---	STB	600 V, 30 AMP, 12-POINT SHORTING BLOCK	EB27B12S	GE	**
14	---	FU	250 V, 30 AMP, 1-POLE CLASS H FUSE BLOCK	HM25030-1SR	BUSSMAN	3
15	---	FU	250 V, 30 AMP, 3-POLE CLASS H FUSE BLOCK	HM25030-3SR	BUSSMAN	4
16	BUS	GND	1"X27"X1/4" COPPER GROUND BAR	---	---	1
			** AS NEEDED			

NAMEPLATE ENGRAVING SCHEDULE								
No.	SIZE	TEXT HEIGHT	LINE No. 1	TEXT HEIGHT	LINE No. 2	TEXT HEIGHT	LINE No. 3	QTY.
N801	2" x 9"	3/4"	PANEL 8	3/8"	69KV LINES	3/8"	LNG69 & CT4	1
N802	1" x 2 1/2"	5/16"	21L-LNG69 PRI	3/16"	LANGE	3/16"	PRIMARY RELAY	1
N803	1" x 2 1/2"	5/16"	6WR01	3/16"	BREAKER	3/16"	CONTROL	1
N804	1" x 5 3/4"	1/8"	SEE DETAIL A - WRC-E-208A					1
N805	1" x 5 3/4"	1/8"	SEE DETAIL B - WRC-E-208A					1
N806	1" x 5 3/4"	1/8"	SEE DETAIL C - WRC-E-208A					1
N807	1" x 2 1/2"	5/16"	21L-LNG69 BU	3/16"	LANGE	3/16"	BACKUP RELAY	1
N808	1" x 2 1/2"	5/16"	6WR04	3/16"	BREAKER	3/16"	CONTROL	1
N809	1" x 5 3/4"	1/8"	SEE DETAIL D - WRC-E-208A					1
N810	1" x 5 3/4"	1/8"	SEE DETAIL E - WRC-E-208A					1
N811	1" x 5 3/4"	1/8"	SEE DETAIL F - WRC-E-208A					1
N812	1" x 2 1/2"	5/16"	21L-CT4	3/16"	CT4	3/16"	BACKUP RELAY	1
N813	1" x 2 1/2"	5/16"	6WR07	3/16"	BREAKER	3/16"	CONTROL	1
N814	1" x 5 3/4"	1/8"	SEE DETAIL G - WRC-E-208A					1
N815	1" x 5 3/4"	1/8"	SEE DETAIL H - WRC-E-208A					1
N816	1" x 5 3/4"	1/8"	SEE DETAIL I - WRC-E-208A					1
N817	1" x 2 1/2"	5/16"	87L-CT4	3/16"	CT4	3/16"	PRIMARY RELAY	1
N818	1" x 5 3/4"	1/8"	SEE DETAIL J - WRC-E-208A					1
N819	1" x 5 3/4"	1/8"	SEE DETAIL K - WRC-E-208A					1
N820	1" x 5 3/4"	1/8"	SEE DETAIL L - WRC-E-208A					1
N821	1" x 5 3/4"	1/8"	SEE DETAIL M - WRC-E-208A					1
N822	1" x 5 3/4"	1/8"	SEE DETAIL N - WRC-E-208A					1
N823	1" x 5 3/4"	1/8"	SEE DETAIL O - WRC-E-208A					1

NOTES:

1. THE PANEL COLOR SHALL BE ANSI 61 GRAY.
2. THE NAMEPLATES SHALL BE MADE OF LAMINATED PHENOLIC ENGRAVING STOCK AND SHALL UTILIZE LETTERING THAT IS STANDARD ROMAN OR SANS SERIF PRINT STYLES, UNLESS NOTED OTHERWISE.
3. ALL NAMEPLATES SHALL BE BLACK WITH WHITE CORE AND UTILIZE 3/16" LETTERING, UNLESS NOTED OTHERWISE.
4. EACH NAMEPLATE SHALL BE AFFIXED TO THE PANEL AT THE LOCATIONS SHOWN ON THE PANEL LAYOUT AND THEIR CORRESPONDING NAMEPLATE LABELING DETAIL.
5. MAIN PANEL NAMEPLATE SHALL BE AFFIXED TO THE BACK OF THE PANEL NEAR THE TOP OF THE PANEL.

P:\04233\00\DWG\RECORD\WRC\CAD\WRC-E-208.DWG

DGR ENGINEERING
ROCK RAPIDS, IOWA
(712) 472-2531

DATE	DRAWN BY	NO.	APPROVED BY	REVISION DESCRIPTION
06-20	SMW	1	PJK	CONFORMING TO CONSTRUCTION RECORDS
10-19	SMW	0	PJK	FOR CONSTRUCTION

BLACK HILLS ENERGY

WEST RAPID CITY SUBSTATION
PANEL LAYOUT
69 kV LINES LNG69 & CT4
(PANEL 8)

DRAWN BY SMW DATE 11-18
APPROVED BY PJK DATE 11-18
DWG NO. WRC-E-208
REVISION 1

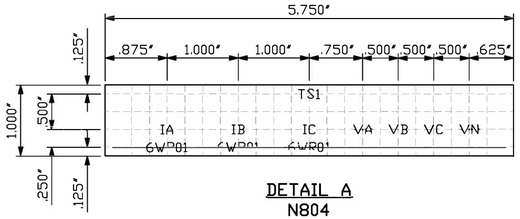

DETAIL A
N804

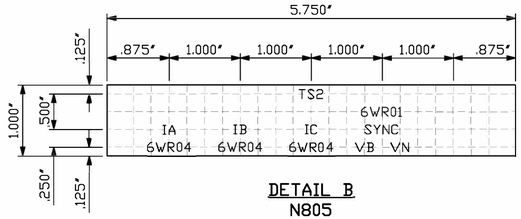

DETAIL B
N805

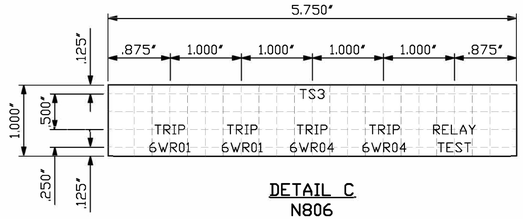

DETAIL C
N806

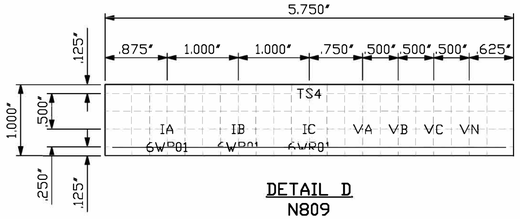

DETAIL D
N809

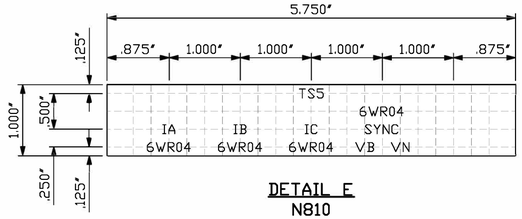

DETAIL E
N810

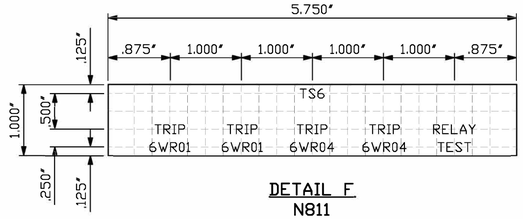

DETAIL F
N811

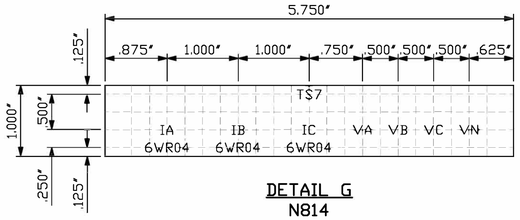

DETAIL G
N814

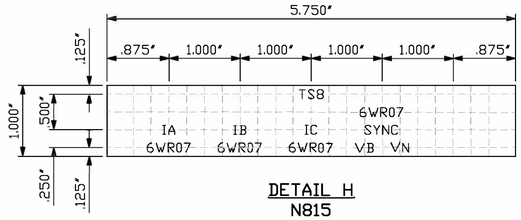

DETAIL H
N815

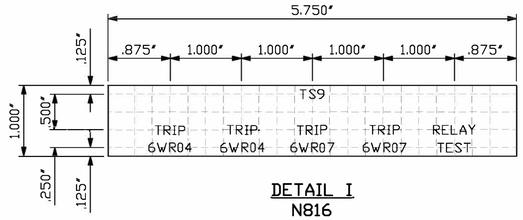

DETAIL I
N816

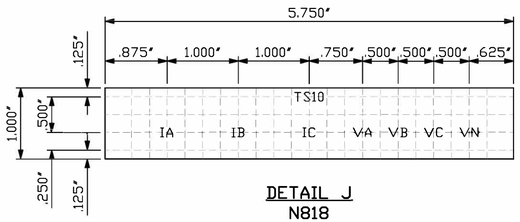

DETAIL J
N818

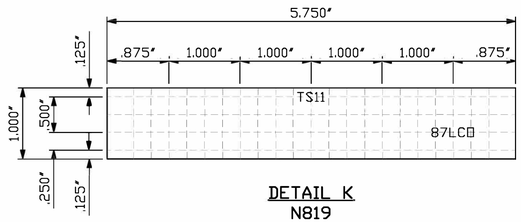

DETAIL K
N819

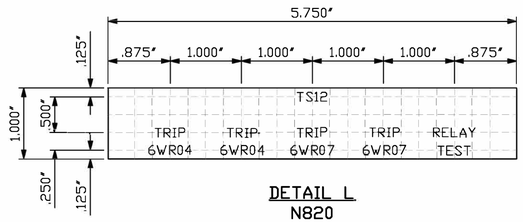

DETAIL L
N820

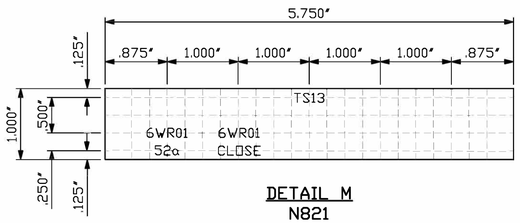

DETAIL M
N821

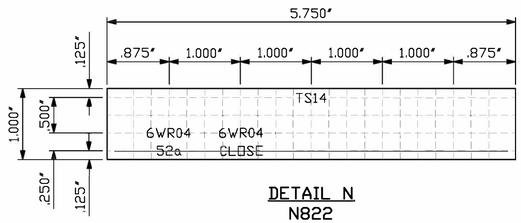

DETAIL N
N822

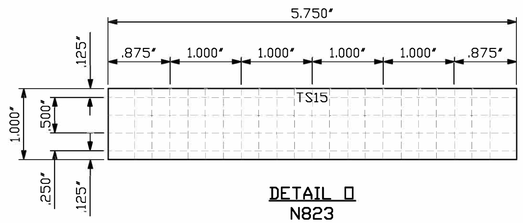

DETAIL O
N823

NOTES:
1. THE NAMEPLATES SHALL BE MADE OF LAMINATED PHENOLIC ENGRAVING STOCK AND SHALL UTILIZE LETTERING THAT IS STANDARD ROMAN OR SANS SERIF PRINT STYLES, UNLESS NOTED OTHERWISE.
2. ALL NAMEPLATES SHALL BE BLACK WITH WHITE CORE AND UTILIZE 3/16" LETTERING, UNLESS NOTED OTHERWISE.
3. EACH NAMEPLATE SHALL BE AFFIXED TO THE PANEL AT THE LOCATIONS SHOWN ON THE PANEL LAYOUT AND THEIR CORRESPONDING NAMEPLATE LABELING DETAIL.

P:\04023\00\DWG\RECORD\WRC\CAD\WRC-E-208A.DWG

DGR ENGINEERING
ROCK RAPIDS, IOWA
(712) 472-2531

DATE	DRAWN BY	NO.	APPROVED BY	REVISION DESCRIPTION
06-20	SMW	1	PDK	CONFORMING TO CONSTRUCTION RECORDS
10-19	SMW	0	PDK	FOR CONSTRUCTION

BLACK HILLS ENERGY

WEST RAPID CITY SUBSTATION
NAMEPLATE DETAILS
69 kV LINES LNG3 & CT4
(PANEL 8)

DRAWN BY SMW DATE 11-18
APPROVED BY PDK DATE 11-18
DWG NO. WRC-E-208A
REVISION 1

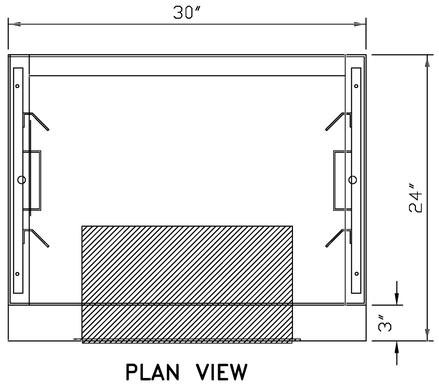

PLAN VIEW

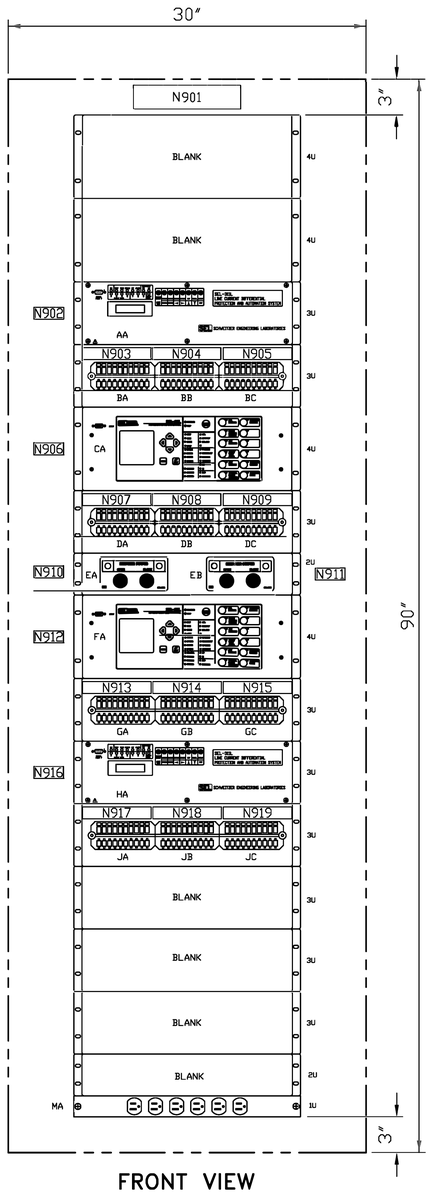

FRONT VIEW

BILL OF MATERIAL						
ITEM NO.	LOCATION	FUNCTION	DESCRIPTION	PART NO.	MANUFACTURER	QTY
01	---	---	90"X30"X24" FREESTANDING PANEL	---	---	1
02	AA	87L-BF1 PRI	LINE CURRENT DIFFERENTIAL SYSTEM	0311L1HCC3254X4XX KEY:0098	SEL	1
03	BA,BB,BC	TS1,TS2,TS3	RACK MOUNT TEST SWITCH ASSEMBLY WITH 3 10-POLE TEST SWITCHES (FMS-10FF, FMS-10FF, FMS-10AI) AND CLEAR COVER	293RG-330HI	STATES	1
04	CA	87L-BF1 BU	ADVANCED LINE DIFFERENTIAL SYSTEM	0411L0X4X5C6CCXH474XXXX KEY:9613	SEL	1
05	DA,DB,DC	TS4,TS5,TS6	RACK MOUNT TEST SWITCH ASSEMBLY WITH 3 10-POLE TEST SWITCHES (FMS-10FF, FMS-10FF, FMS-10AI) AND CLEAR COVER	293RG-330HI	STATES	1
06	EA EB	101-6WR10 101-6WR13	CONTROL SWITCH MODULE	951031B2 KEY:1913	SEL	2
07	FA	87L-BF2-BU	ADVANCED LINE DIFFERENTIAL SYSTEM	0411L0X4X5C6CCXH474XXXX KEY:9613	SEL	1
08	GA,GB,GC	TS7,TS8,TS9	RACK MOUNT TEST SWITCH ASSEMBLY WITH 3 10-POLE TEST SWITCHES (FMS-10FF, FMS-10FF, FMS-10AI) AND CLEAR COVER	293RG-330HI	STATES	1
09	HA	87L-BF2-PRI	LINE CURRENT DIFFERENTIAL SYSTEM	0311L1HCC3254X4XX KEY:0098	SEL	1
10	JA,JB,JC	TS10,TS11,TS12	RACK MOUNT TEST SWITCH ASSEMBLY WITH 3 10-POLE TEST SWITCHES (FMS-10FF, FMS-10FF, FMS-10AI) AND CLEAR COVER	293RG-330HI	STATES	1
11	MA	RECPT10	RACK MOUNT, FRONT ACCESS, 6-OUTLET POWER STRIP	RS-0615-F	TRIPPLITE	1
12	---	CB	2-POLE SCREW TERMINAL, 15 AMP MAGNETIC CIRCUIT BREAKER	FAZ-C15/2-NA-DC	EATON	4
13	---	TB	600 V, 30 AMP, 12-POINT TERMINAL BLOCK	EB25B12	GE	**
14	---	STB	600 V, 30 AMP, 12-POINT SHORTING BLOCK	EB27B12S	GE	**
15	---	FU	250 V, 30 AMP, 1-POLE CLASS H FUSE BLOCK	HM25030-1SR	BUSSMAN	2
16	---	FU	250 V, 30 AMP, 3-POLE CLASS H FUSE BLOCK	HM25030-3SR	BUSSMAN	4
17	BUS	GND	1"X27"X1/4" COPPER GROUND BAR	---	---	1
18						
			** AS NEEDED			

NAMEPLATE ENGRAVING SCHEDULE								
No.	SIZE	TEXT HEIGHT	LINE No. 1	TEXT HEIGHT	LINE No. 2	TEXT HEIGHT	LINE No. 3	QTY.
N901	2" x 9"	3/4"	PANEL 9	3/8"	69KV LINES	3/8"	BF1 & BF2	1
N902	1" x 2 1/2"	5/16"	87L-BF1 PRI	3/16"	BEN FRENCH 1	3/16"	PRIMARY RELAY	1
N903	1" x 5 3/4"	1/8"	SEE DETAIL A - WRC-E-209A					1
N904	1" x 5 3/4"	1/8"	SEE DETAIL B - WRC-E-209A					1
N905	1" x 5 3/4"	1/8"	SEE DETAIL C - WRC-E-209A					1
N906	1" x 2 1/2"	5/16"	87L-BF1 BU	3/16"	BEN FRENCH 1	3/16"	BACKUP RELAY	1
N907	1" x 5 3/4"	1/8"	SEE DETAIL D - WRC-E-209A					1
N908	1" x 5 3/4"	1/8"	SEE DETAIL E - WRC-E-209A					1
N909	1" x 5 3/4"	1/8"	SEE DETAIL F - WRC-E-209A					1
N910	1" x 2 1/2"	5/16"	101-6WR10	3/16"	BREAKER	3/16"	CONTROL	1
N911	1" x 2 1/2"	5/16"	101-6WR13	3/16"	BREAKER	3/16"	CONTROL	1
N912	1" x 2 1/2"	5/16"	87L-BF2 BU	3/16"	BEN FRENCH 2	3/16"	BACKUP RELAY	1
N913	1" x 5 3/4"	1/8"	SEE DETAIL G - WRC-E-209A					1
N914	1" x 5 3/4"	1/8"	SEE DETAIL H - WRC-E-209A					1
N915	1" x 5 3/4"	1/8"	SEE DETAIL I - WRC-E-209A					1
N916	1" x 2 1/2"	5/16"	87L-BF2 PRI	3/16"	BEN FRENCH 2	3/16"	PRIMARY RELAY	1
N917	1" x 5 3/4"	1/8"	SEE DETAIL J - WRC-E-209A					1
N918	1" x 5 3/4"	1/8"	SEE DETAIL K - WRC-E-209A					1
N919	1" x 5 3/4"	1/8"	SEE DETAIL L - WRC-E-209A					1

NOTES:

1. THE PANEL COLOR SHALL BE ANSI 61 GRAY.
2. THE NAMEPLATES SHALL BE MADE OF LAMINATED PHENOLIC ENGRAVING STOCK AND SHALL UTILIZE LETTERING THAT IS STANDARD ROMAN OR SANS SERIF PRINT STYLES, UNLESS NOTED OTHERWISE.
3. ALL NAMEPLATES SHALL BE BLACK WITH WHITE CORE AND UTILIZE 3/16" LETTERING, UNLESS NOTED OTHERWISE.
4. EACH NAMEPLATE SHALL BE AFFIXED TO THE PANEL AT THE LOCATIONS SHOWN ON THE PANEL LAYOUT AND THEIR CORRESPONDING NAMEPLATE LABELING DETAIL.
5. MAIN PANEL NAMEPLATE SHALL BE AFFIXED TO THE BACK OF THE PANEL NEAR THE TOP OF THE PANEL.

P:\04233\00\DWG\RECORD\WRC\CAD\WRC-E-209.DWG

DGR ENGINEERING
ROCK RAPIDS, IOWA
(712) 472-2531

DATE	DRAWN BY	NO.	APPROVED BY	REVISION DESCRIPTION
06-20	SMW	1	PDK	CONFORMING TO CONSTRUCTION RECORDS
10-19	SMW	0	PDK	FOR CONSTRUCTION

BLACK HILLS ENERGY

WEST RAPID CITY SUBSTATION
PANEL LAYOUT
69 kV LINES BF1 & BF2 (PANEL 9)

DRAWN BY SMW DATE 11-18
APPROVED BY PDK DATE 11-18
DWG NO. WRC-E-209 REVISION 1

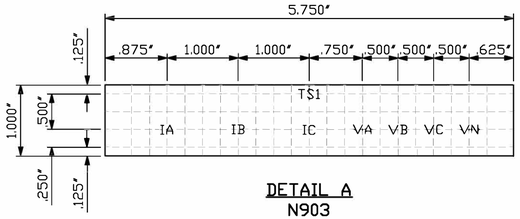

DETAIL A
N903

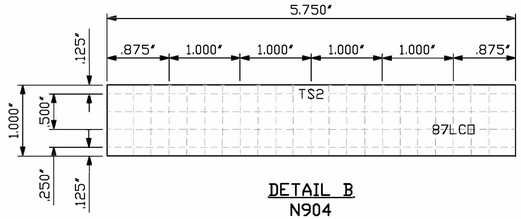

DETAIL B
N904

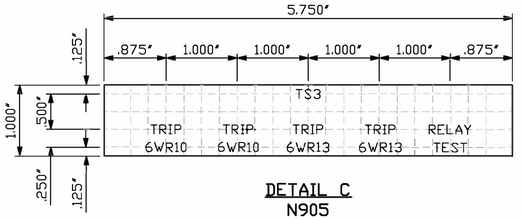

DETAIL C
N905

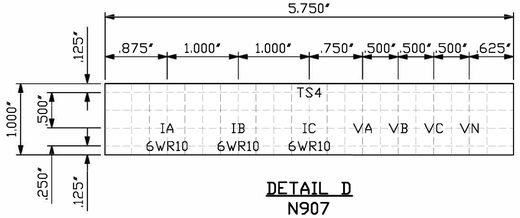

DETAIL D
N907

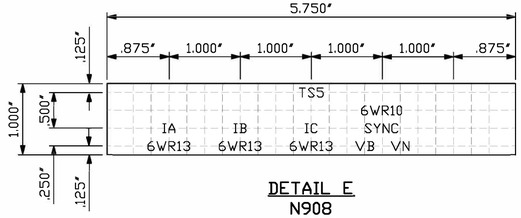

DETAIL E
N908

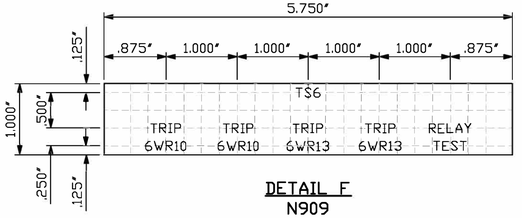

DETAIL F
N909

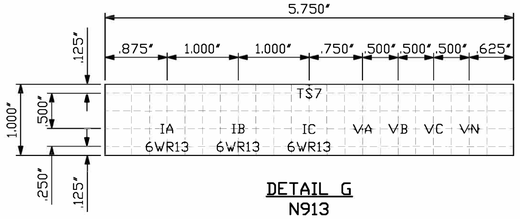

DETAIL G
N913

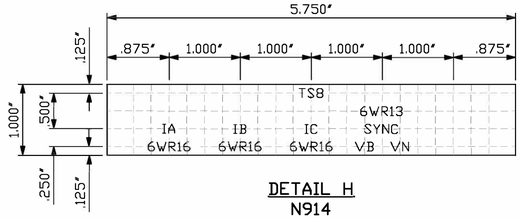

DETAIL H
N914

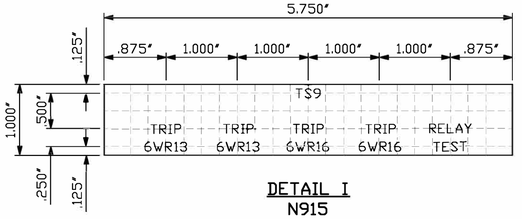

DETAIL I
N915

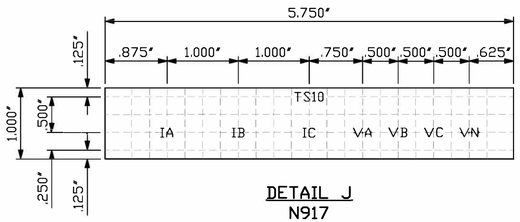

DETAIL J
N917

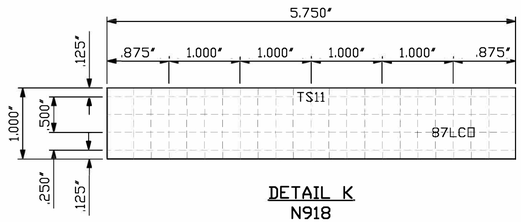

DETAIL K
N918

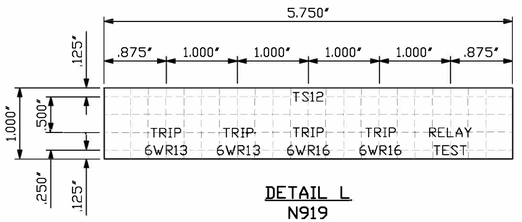

DETAIL L
N919

NOTES:
1. THE NAMEPLATES SHALL BE MADE OF LAMINATED PHENOLIC ENGRAVING STOCK AND SHALL UTILIZE LETTERING THAT IS STANDARD ROMAN OR SANS SERIF PRINT STYLES, UNLESS NOTED OTHERWISE.
2. ALL NAMEPLATES SHALL BE BLACK WITH WHITE CORE AND UTILIZE 3/16" LETTERING, UNLESS NOTED OTHERWISE.
3. EACH NAMEPLATE SHALL BE AFFIXED TO THE PANEL AT THE LOCATIONS SHOWN ON THE PANEL LAYOUT AND THEIR CORRESPONDING NAMEPLATE LABELING DETAIL.

P:\04123\00\DWG\RECORD\WRC\CAD\WRC-E-209A.DWG

DGR ENGINEERING
ROCK RAPIDS, IOWA
(712) 472-2531

DATE	DRAWN BY	NO.	APPROVED BY	REVISION DESCRIPTION
06-20	SMW	1	PDK	CONFORMING TO CONSTRUCTION RECORDS
10-19	SMW	0	PDK	FOR CONSTRUCTION

BLACK HILLS ENERGY

WEST RAPID CITY SUBSTATION
NAMEPLATE DETAILS
69 kV LINES BF1 & BF2
(PANEL 9)

DRAWN BY SMW DATE 11-18
APPROVED BY PDK DATE 11-18
DWG NO. WRC-E-209A REVISION 1

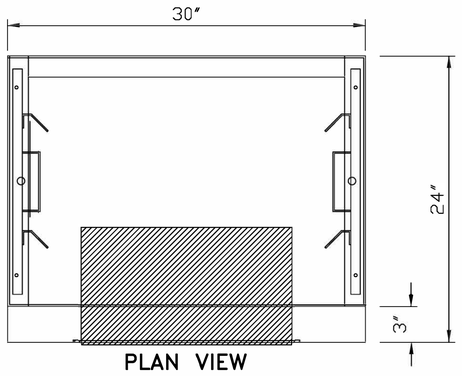

PLAN VIEW

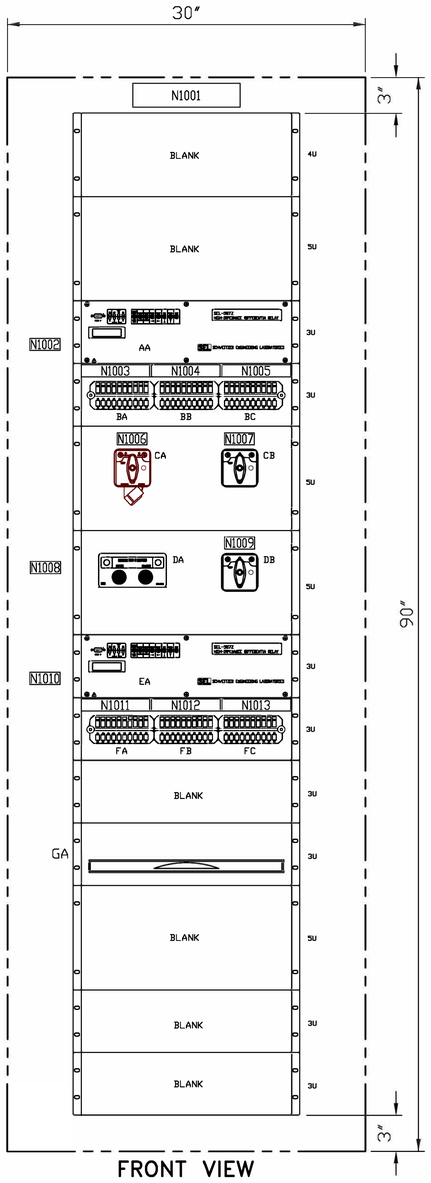

FRONT VIEW

BILL OF MATERIAL						
ITEM	LOCATION	FUNCTION	DESCRIPTION	PA RTNO.	MANUFACTURER	QTY.
01	–	–	90″ x 30″ x 24″ FREESTANDING PANEL			1
02	AA, EA	87B2 PRI, 87B2 BU	HIGH IMPEDANCE DIFFERENTIAL RELAY	058720X315H12XX KEY-7857	SEL	2
03	BA, BB, BC FA, FB, FC	TS1, TS2, TS3 TS4, TS5, TS6	RACK MOUNT TEST SWITCH ASSEMBLY WITH 3 10-POLE TEST SWITCHES (FMS-10FF, FMS-10A1, FMS-10A1) AND CLEAR COVER	293RG-330CN	STATES	2
04	CA	86B2	SERIES 24 LOCKOUT RELAY	78PB10D	ELECTROSWITCH	1
05	CB, DB	87B2PCO, 87B2BCO	SERIES 24 BUS DIFFERENTIAL CUTOUT SWITCH, 4-DECK, WITH 125VDC AMBER (OFF) LED & ENGRAVED NAMEPLATE: TITLE - BUS DIFF POS. 1-OFF POS. 2-ON	24PA204NJ	ELECTROSWITCH	2
06	DA	101-6WR16	CONTROL SWITCH MODULE	951031B2 KEY1913	SEL	1
07	GA	SHELF	RACK MOUNT, SLIDING SHELF	RTMS06B	BLACK BOX	1
08	–	TB	600 V, 30 AMP, 12-POINT TERMINAL BLOCK	EB25B12	GE	**
09	–	STB	600 V, 30 AMP, 12-POINT SHORTING BLOCK	EB27B12S	GE	**
10	–	CB	2-POLE SCREW TERMINAL, 15 AMP MAGNETIC CIRCUIT BREAKER	FAZ-C15/2-NA-DC	EATON	3
11	BUS	GND	1″ X 27″ X 14″ COPPER GROUND BAR	---	---	1
			** AS NEEDED			

NAMEPLATE ENGRAVING SCHEDULE								
No.	SIZE	TEXT HEIGHT	LINE No. 1	TEXT HEIGHT	LINE No. 2	TEXT HEIGHT	LINE No. 3	QTY.
N1001	2″ x 9″	3/4″	PANEL 10	3/8″	69 kV BUS 2	3/8″	6WR16 BKR CTRL	1
N1002	1″ x 3″	5/16″	87B2 PRI	3/16″	69 kV BUS 2	3/16″	PRIMARY RELAY	1
N1003	1″ x 5 3/4″	1/8″	SEE DETAIL A - WRC-E-210A					1
N1004	1″ x 5 3/4″	1/8″	SEE DETAIL B - WRC-E-210A					1
N1005	1″ x 5 3/4″	1/8″	SEE DETAIL C - WRC-E-210A					1
N1006	1″ x 3″	5/16″	86B2	3/16″	69 kV BUS 2	3/16″	LOCKOUT RELAY	1
N1007	1″ x 3″	5/16″	87B2PCO	3/16″	69 kV BUS 2	3/16″	PRIMARY CUTOUT	1
N1008	1″ x 2 1/2″	5/16″	101-6WR16	3/16″	BREAKER	3/16″	CONTROL	1
N1009	1″ x 3″	5/16″	87B2BCO	3/16″	69 kV BUS 2	3/16″	BACKUP CUTOUT	1
N1010	1″ x 3″	5/16″	87B2 BU	3/16″	69 kV BUS 2	3/16″	BACKUP RELAY	1
N1011	1″ x 5 3/4″	1/8″	SEE DETAIL D - WRC-E-210A					1
N1012	1″ x 5 3/4″	1/8″	SEE DETAIL E - WRC-E-210A					1
N1013	1″ x 5 3/4″	1/8″	SEE DETAIL F - WRC-E-210A					1

NOTES:

1. THE PANEL COLOR SHALL BE ANSI 61 GRAY.
2. THE NAMEPLATES SHALL BE MADE OF LAMINATED PHENOLIC ENGRAVING STOCK AND SHALL UTILIZE LETTERING THAT IS STANDARD ROMAN OR SANS SERIF PRINT STYLES, UNLESS NOTED OTHERWISE.
3. ALL NAMEPLATES SHALL BE BLACK WITH WHITE CORE AND UTILIZE 3/16″ LETTERING, UNLESS NOTED OTHERWISE.
4. EACH NAMEPLATE SHALL BE AFFIXED TO THE PANEL AT THE LOCATIONS SHOWN ON THE PANEL LAYOUT AND THEIR CORRESPONDING NAMEPLATE LABELING DETAIL.
5. MAIN PANEL NAMEPLATE SHALL BE AFFIXED TO THE BACK OF THE PANEL NEAR THE TOP OF THE PANEL.

P:\04023\00\DWG\RECORD\WRC\CAD\WRC-E-210.DWG

DGR ENGINEERING
ROCK RAPIDS, IOWA
(712) 472-2531

DATE	DRAWN BY	NO.	APPROVED BY	REVISION DESCRIPTION
06-20	SMW	1	PDK	CONFORMING TO CONSTRUCTION RECORDS
10-19	SMW	0	PDK	FOR CONSTRUCTION

BLACK HILLS ENERGY

WEST RAPID CITY SUBSTATION
PANEL LAYOUT
69 kV BUS 2
(PANEL 10)

DRAWN BY SMW DATE 11-18
APPROVED BY PDK DATE 11-18

DWG NO. WRC-E-210 REVISION 1

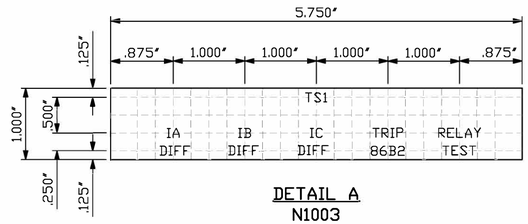

DETAIL A
N1003

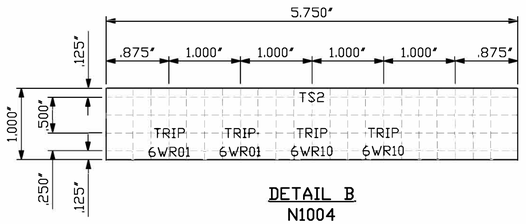

DETAIL B
N1004

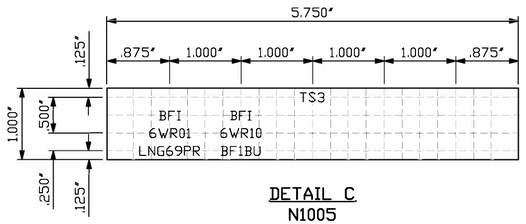

DETAIL C
N1005

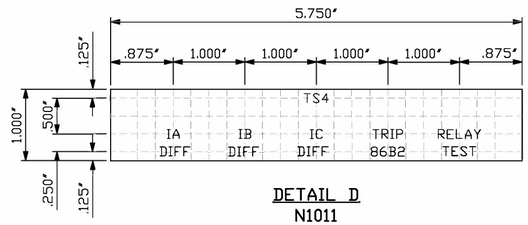

DETAIL D
N1011

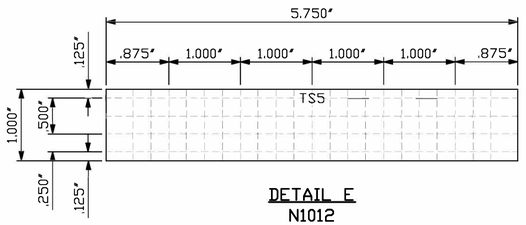

DETAIL E
N1012

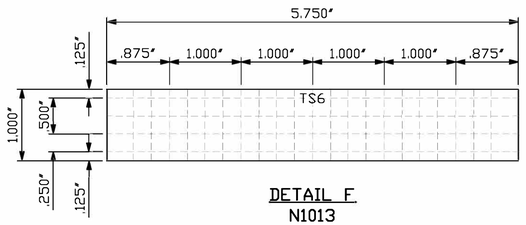

DETAIL F
N1013

NOTES:
1. THE NAMEPLATES SHALL BE MADE OF LAMINATED PHENOLIC ENGRAVING STOCK AND SHALL UTILIZE LETTERING THAT IS STANDARD ROMAN OR SANS SERIF PRINT STYLES, UNLESS NOTED OTHERWISE.

2. ALL NAMEPLATES SHALL BE BLACK WITH WHITE CORE AND UTILIZE 3/16" LETTERING, UNLESS NOTED OTHERWISE.

3. EACH NAMEPLATE SHALL BE AFFIXED TO THE PANEL AT THE LOCATIONS SHOWN ON THE PANEL LAYOUT AND THEIR CORRESPONDING NAMEPLATE LABELING DETAIL.

P:\04023\00\DWG\RECORD\WRCC\CAD\WRC-E-210A.DWG

DGR ENGINEERING
ROCK RAPIDS, IOWA
(712) 472-2531

DATE	DRAWN BY	NO.	APPROVED BY	REVISION DESCRIPTION
06-20	SMW	1	PDK	CONFORMING TO CONSTRUCTION RECORDS
10-19	SMW	0	PDK	FOR CONSTRUCTION

BLACK HILLS ENERGY

WEST RAPID CITY SUBSTATION
NAMEPLATE DETAILS
69 kV BUS 2
(PANEL 10)

DRAWN BY SMW DATE 11-18
APPROVED BY PDK DATE 11-18
DWG NO. WRC-E-210A REVISION 1

P:\04\233\00\DWG\RECORD\WRC\CAD\WRC-E-231A.DWG

FIBER (PANEL 1) - REAR VIEW

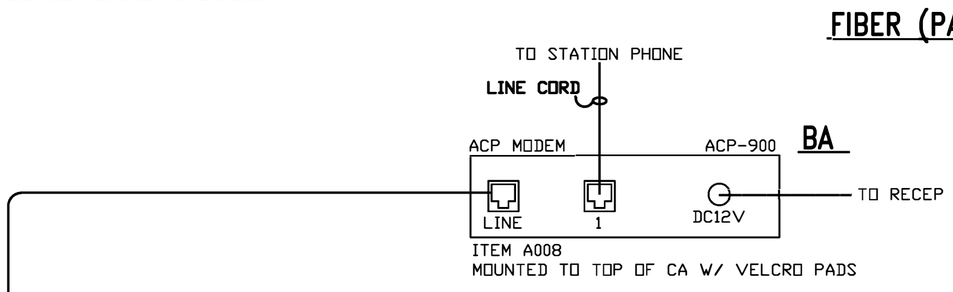

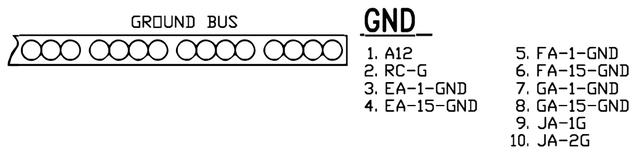



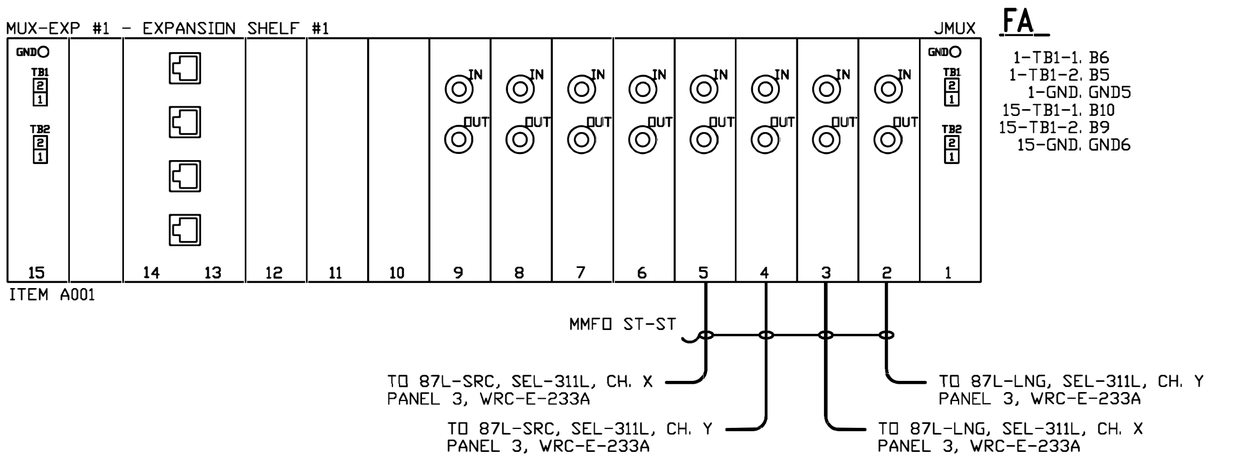

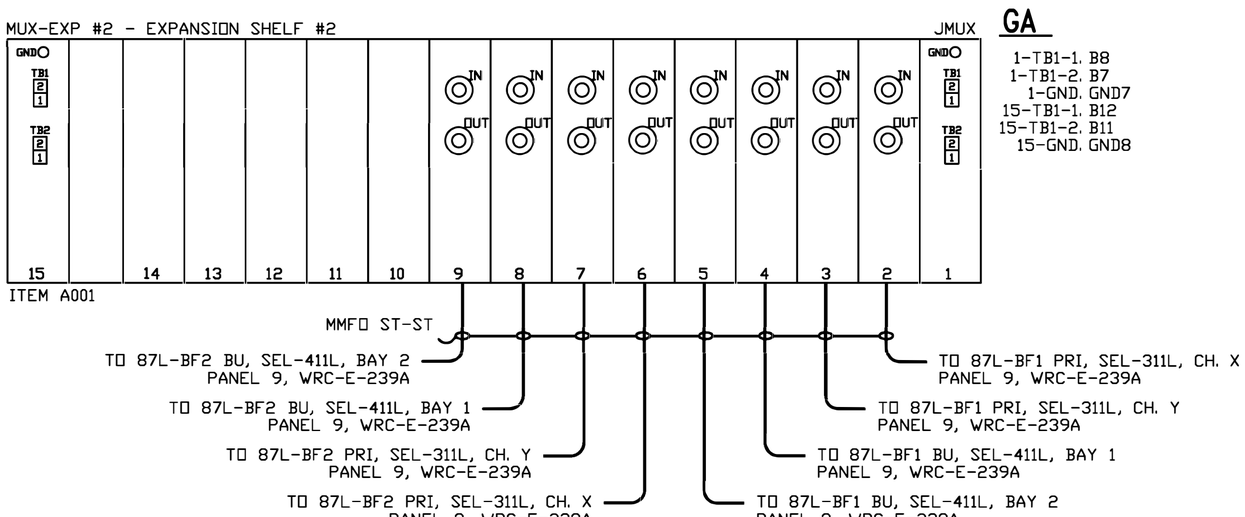

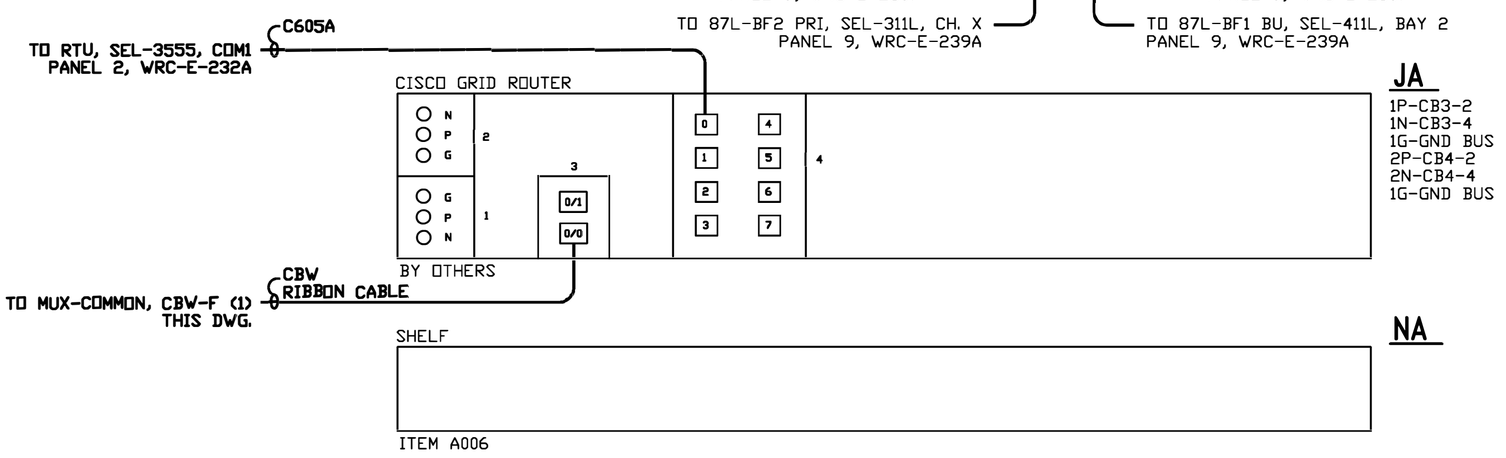

NOTES:

1. ALL WIRING TO BE #12 AWG, SIS EXCEPT AS NOTED:
   ^ - #16 AWG, SIS WIRE
2. ALL TERMINATIONS TO USE FORK LUGS EXCEPT CT CIRCUIT CONNECTIONS WILL HAVE INSULATED RING TONGUE TYPE LUGS. CT CIRCUITS NOTED BY '~'
3. DESTINATION TYPE WIRE MARKERS.

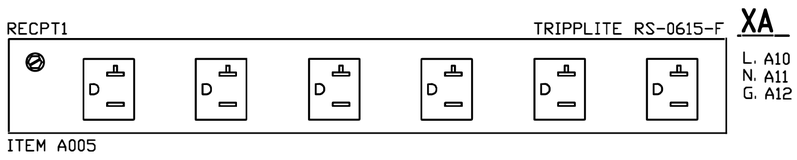

ENGINEERING
ROCK RAPIDS, IOWA
(712) 472-2531

ELECTRICAL POWER PRODUCTS

DES MOINES, IA
(515)262-8161
www.ep2.com

EP2 JOB #10292

NO.	DATE	DRAWN BY	APPROVED BY	REVISION DESCRIPTION
1	7/26/19	MT/EP2	EP2/MT	ADDED COMM CABLES
2	10/23/19	MT/EP2	EP2/MT	AS BUILT
3	06-20	KLV	PJK	CONFORMING TO CONSTRUCTION RECORDS

BLACK HILLS ENERGY

WEST RAPID CITY SUBSTATION

WIRING DIAGRAM

PANEL 1

DWG NO. WRC-E-231A

REVISION 3

DGR ENGINEERING
ROCK RAPIDS, IOWA
(712) 472-2531

P:\04\233\00\DWG\RECORD\WRC\CAD\WRC-E-231B.DWG

FIBER (PANEL 1) - REAR VIEW

LEFT SIDE SHEET

A

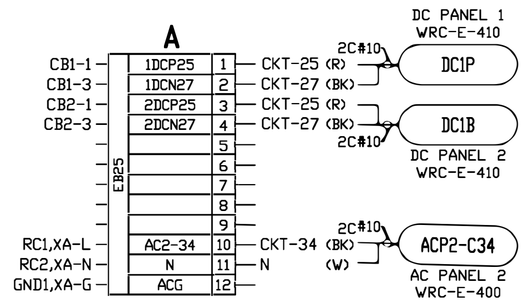

B

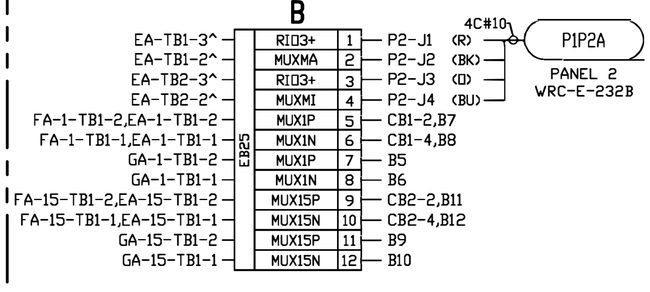

C

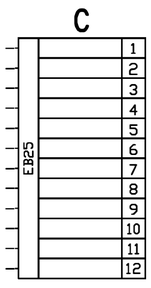

CB1



1. A1,CB3-1
2. B5
3. A2,CB3-3
4. B6

CB2



1. A3,CB4-1
2. B9
3. A4,CB4-3
4. B10

CB3

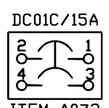

1. CB1-1
2. JA-1P
3. CB1-3
4. JA-1N

CB4

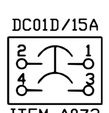

1. CB2-1
2. JA-2P
3. CB2-3
4. JA-2N

RIGHT SIDE SHEET

D

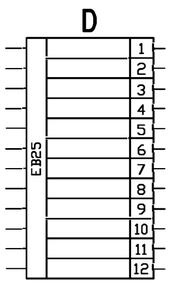

E

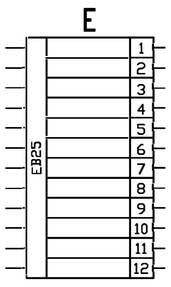

F

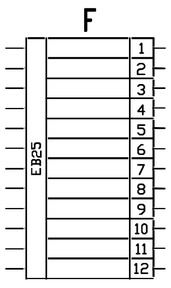

RC

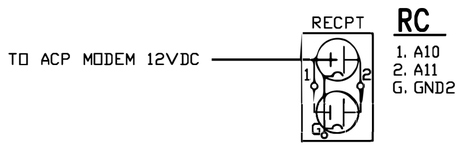

1. A10
2. A11
G. GND2

NOTES:

1. ALL WIRING TO BE #12 AWG, SIS EXCEPT AS NOTED:
   ^ - #16 AWG, SIS WIRE
2. ALL TERMINATIONS TO USE FORK LUGS EXCEPT CT CIRCUIT CONNECTIONS WILL HAVE INSULATED RING TONGUE TYPE LUGS. CT CIRCUITS NOTED BY '~'
3. DESTINATION TYPE WIRE MARKERS.

SYMBOLS LEGEND:

✳ INDICATES SHORTING TYPE TERMINAL BLOCK.

ELECTRICAL POWER PRODUCTS

EP2
DES MOINES, IA
(515)262-8161
www.ep2.com

EP2 JOB #10292

NO.	DESCRIPTION	DRAWN BY	DATE	APPROVED BY
	AS BUILT	KLV	06-20	PJK
1	CONFORMING TO CONSTRUCTION RECORDS	MT/EP2	10/23/19	
2	REVISION	EP2/MT	7/1/19	EP2/MT

BLACK HILLS ENERGY

WEST RAPID CITY SUBSTATION
WIRING DIAGRAM
PANEL 1

DWG NO. WRC-E-231B REVISION 2

P:\04\233\00\DWG\RECORD\WRC\CAD\WRC-E-232A.DWG

COMM (PANEL 2) - REAR VIEW

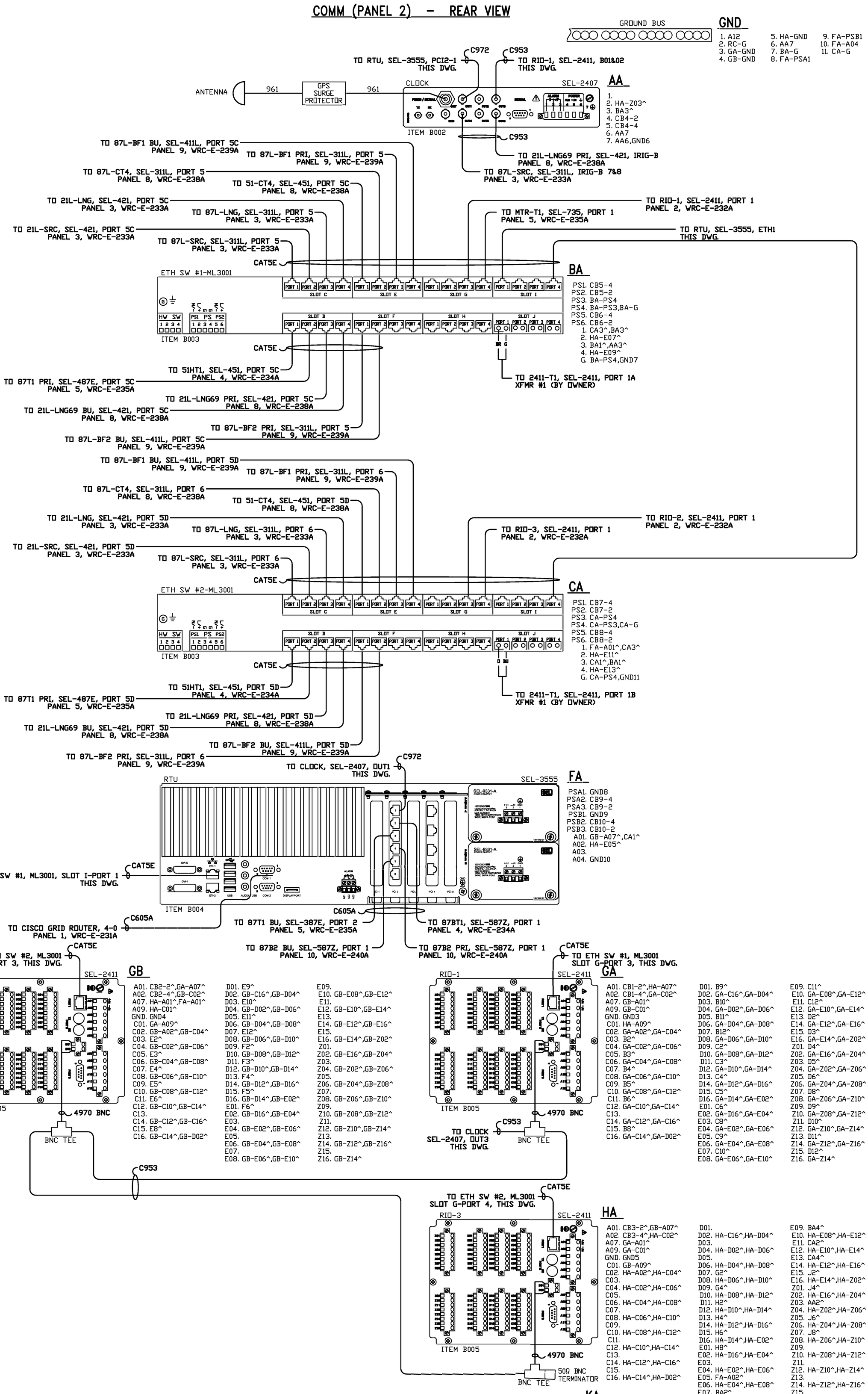

NOTES:

1. ALL WIRING TO BE #12 AWG, SIS EXCEPT AS NOTED:
   ^ - #16 AWG, SIS WIRE
2. ALL TERMINATIONS TO USE FORK LUGS EXCEPT CT CIRCUIT CONNECTIONS WILL HAVE INSULATED RING TONGUE TYPE LUGS. CT CIRCUITS NOTED BY '~'
3. DESTINATION TYPE WIRE MARKERS.

DGR ENGINEERING
ROCK RAPIDS, IOWA
(712) 472-2531

EP2 JOB #10292
EP2
DES MOINES, IA
(515)262-8161
www.ep2.com
ELECTRICAL POWER PRODUCTS

REVISION DESCRIPTION	REV.	APPROVED BY	DATE	DRAWN BY
AS BUILT	2		10/23/19	MT/EP2
ADDED COMM CABLES	1		7/26/19	MT/EP2
CONFORMING TO CONSTRUCTION RECORDS	3	PDK	06-20	KLV

BLACK HILLS ENERGY

WEST RAPID CITY SUBSTATION

WIRING DIAGRAM
PANEL 2

DRAWN BY EP2/MT DATE 7/1/19
APPROVED BY EP2/MT DATE 7/1/19

DWG NO. WRC-E-232A REVISION 3

DGR ENGINEERING
ROCK RAPIDS, IOWA
(712) 472-2531

P:\04\233\00\DWG\RECORD\WRC\CAD\WRC-E-232B.DWG

COMM (PANEL 2) - REAR VIEW

LEFT SIDE SHEET

A

EB25

CB1-1	1DCP26	1	CKT-26 (R)	2C#10	DC2P
CB1-3	1DCN28	2	CKT-28 (BK)		
CB6-1	2DCP26	3	CKT-26 (R)	2C#10	DC2B
CB6-3	2DCN28	4	CKT-28 (BK)		
		5			
		6			
		7			
		8			
		9			
NA-L,RC1	AC2-35	10	CKT-35 (BK)	2C#10	ACP2-C35
NA-N,RC2	N	11	N (W)		
NA-G,GND1	ACG	12			

DC PANEL 1 WRC-E-410
DC PANEL 2 WRC-E-410
AC PANEL 2 WRC-E-400

B

EB25

CB1-2^,B7^	RIO1+	1	143-1 (R)	7C#14	464-S3A
GA-C03^	64LG	2	143-2 (BK)		
GA-C05^	64LGL	3	143-3 (D)		
GA-C07^	64MTR	4	143-4 (BU)		
GA-C09^	64LDC	5	143-5 (Y)	1 SP	
GA-C11^	64HTR	6	143-6 (BR)		
B1^,C1^	RIO1+	7	153-1 (R)	7C#14	467-S3A
GA-C15^	67LG	8	153-2 (BK)		
GA-D01^	67LGL	9	153-3 (D)		
GA-D03^	67MTR	10	153-4 (BU)		
GA-D05^	67LDC	11	153-5 (Y)	1 SP	
GA-D07^	67HTR	12	153-6 (BR)		

TBR WRC-E-303

C

EB25

B7^,C7^	RIO1+	1	163-1 (R)	7C#14	470-S3A
GA-D09^	70LG	2	163-2 (BK)		
GA-D11^	70LGL	3	163-3 (D)		
GA-D13^	70MTR	4	163-4 (BU)		
GA-D15^	70LDC	5	163-5 (Y)	1 SP	
GA-E01^	70HTR	6	163-6 (BR)		
C1^,D1^	RIO1+	7	53-1 (R)	7C#14	01-S3A
GA-E03^	01LG	8	53-2 (BK)		
GA-E05^	01LGL	9	53-3 (D)		
GA-E07^	01MTR	10	53-4 (BU)		
GA-E09^	01LDC	11	53-5 (Y)	1 SP	
GA-E11^	01HTR	12	53-6 (BR)		

TBR WRC-E-304
TBR WRC-E-301

D

EB25

C7^,D7^	RIO1+	1	63-1 (R)	7C#14	04-S3A
GA-E13^	04LG	2	63-2 (BK)		
GA-E15^	04LGL	3	63-3 (D)		
GA-Z01^	04MTR	4	63-4 (BU)		
GA-Z03^	04LDC	5	63-5 (Y)	1 SP	
GA-Z05^	04HTR	6	63-6 (BR)		
D1^	RIO1+	7	73-1 (R)	7C#14	07-S3A
GA-Z07^	07LG	8	73-2 (BK)		
GA-Z09^	07LGL	9	73-3 (D)		
GA-Z11^	07MTR	10	73-4 (BU)		
GA-Z13^	07LDC	11	73-5 (Y)	1 SP	
GA-Z15^	07HTR	12	73-6 (BR)		

TBR WRC-E-302

E

EB25

CB2-2^,E7^	RIO2+	1	83-1 (R)	7C#14	10-S3A
GB-C03^	10LG	2	83-2 (BK)		
GB-C05^	10LGL	3	83-3 (D)		
GB-C07^	10MTR	4	83-4 (BU)		
GB-C09^	10LDC	5	83-5 (Y)	1 SP	
GB-C11^	10HTR	6	83-6 (BR)		
E1^,F1^	RIO2+	7	93-1 (R)	7C#14	13-S3A
GB-C15^	13LG	8	93-2 (BK)		
GB-D01^	13LGL	9	93-3 (D)		
GB-D03^	13MTR	10	93-4 (BU)		
GB-D05^	13LDC	11	93-5 (Y)	1 SP	
GB-D07^	13HTR	12	93-6 (BR)		

TBR WRC-E-302

F

EB25

E7^	RIO2+	1	103-1 (R)	7C#14	16-S3A
GB-D09^	16LG	2	103-2 (BK)		
GB-D11^	16LGL	3	103-3 (D)		
GB-D13^	16MTR	4	103-4 (BU)		
GB-D15^	16LDC	5	103-5 (Y)	1 SP	
GB-E01^	16HTR	6	103-6 (BR)		
		7			
		8			
		9			
		10			
		11			
		12			

TBR WRC-E-304

G

EB25

J7^,G3^	RIO3+	1	P4-Q1 (R)	4C#10	P2P4A
HA-D07^	86BT1TR	2	P4-Q2 (BK)		
G1^,H1^	RIO3+	3	P4-Q3 (D)		
HA-D09^	51HT1AL	4	P4-Q4 (BU)		
		5			
		6			
		7			
		8			
		9			
		10			
		11			
		12			

PANEL 4 WRC-E-234B

H

EB25

H3^,G3^	RIO3+	1	P10-P1 (R)	12C#16	P2P10A
HA-D11^	87B2PAL	2	P10-P2 (BK)		
H5^,H1^	RIO3+	3	P10-P3 (D)		
HA-D13^	86B2TR	4	P10-P4 (BU)		
H7^,H3^	RIO3+	5	P10-P5 (Y)		
HA-D15^	87B2POFF	6	P10-P6 (BR)		
H5^	RIO3+	7	P10-P7 (R/BK)	4 SP	
HA-E01^	87B2BOFF	8	P10-P8 (D/BK)		
		9			
		10			
		11			
		12			

PANEL 10 WRC-E-240B

DC02A/15A CB1

1. A1,CB2-1
2. GA-A01^,B1^
3. A2,CB2-3
4. GA-A02^

ITEM B009

DC02B/15A CB2

1. CB1-1,CB3-1
2. GB-A01^,E1^
3. CB1-3,CB3-3
4. GB-A02^

ITEM B009

DC02C/15A CB3

1. CB2-1,CB4-1
2. HA-A01^,J1^
3. CB2-3,CB4-3
4. HA-A02^

ITEM B009

DC02D/15A CB4

1. CB3-1,CB5-1
2. AA4
3. CB3-3,CB5-3
4. AA5

ITEM B009

DC02E/15A CB5

1. CB4-1
2. BA-PS2
3. CB4-3
4. BA-PS1

ITEM B009

DC02F/15A CB6

1. A3,CB7-1
2. BA-PS6
3. A4,CB7-3
4. BA-PS5

ITEM B009

DC02G/15A CB7

1. CB6-1,CB8-1
2. CA-PS2
3. CB6-3,CB8-3
4. CA-PS1

ITEM B009

DC02H/15A CB8

1. CB7-1,CB9-1
2. CA-PS6
3. CB7-3,CB9-3
4. CA-PS5

ITEM B009

DC02J/15A CB9

1. CB8-1,CB10-1
2. FA-PSA3
3. CB8-3,CB10-3
4. FA-PSA2

ITEM B009

DC02K/15A CB10

1. CB9-1
2. FA-PSB3
3. CB9-3
4. FA-PSB2

ITEM B009

RIGHT SIDE SHEET

J

EB25

P1P2A			(R)	P1-B1	RIO3+ 1 CB3-2^,J3^
PANEL 1 WRC-E-231B			(BK)	P1-B2	MUXMA 2 HA-E15^
			(D)	P1-B3	RIO3+ 3 J1^,J5^
			(BU)	P1-B4	MUXMI 4 HA-Z01^
BC2		2C#12	(R)	BATT-CGR	RIO3+ 5 J3^,J7^
BATT. CHGR. WRC-E-400			(BK)	BATT-CGR	BATT 6 HA-Z05^
				BLD ALRMS	RIO3+ 7 J5^,G1^
?				BLD ALRMS	BLDG 8 HA-Z07^
FUTURE BY CUSTOMER					9
					10
					11
					12

K

EB25

	1
	2
	3
	4
	5
	6
	7
	8
	9
	10
	11
	12

L

EB25

	1
	2
	3
	4
	5
	6
	7
	8
	9
	10
	11
	12

M

EB25

	1
	2
	3
	4
	5
	6
	7
	8
	9
	10
	11
	12

RC

RECPT

1. A10
2. A11
G. GND2

ITEM B00?

N

EB25

	1
	2
	3
	4
	5
	6
	7
	8
	9
	10
	11
	12

P

EB25

	1
	2
	3
	4
	5
	6
	7
	8
	9
	10
	11
	12

Q

EB25

	1
	2
	3
	4
	5
	6
	7
	8
	9
	10
	11
	12

NOTES:

1. ALL WIRING TO BE #12 AWG, SIS EXCEPT AS NOTED:
   ^ - #16 AWG, SIS WIRE
2. ALL TERMINATIONS TO USE FORK LUGS EXCEPT CT CIRCUIT CONNECTIONS WILL HAVE INSULATED RING TONGUE TYPE LUGS. CT CIRCUITS NOTED BY '~'
3. DESTINATION TYPE WIRE MARKERS.

SYMBOLS LEGEND:

✳ INDICATES SHORTING TYPE TERMINAL BLOCK.

ELECTRICAL POWER PRODUCTS
EP2
DES MOINES, IA
(515)262-8161
www.ep2.com
EP2 JOB #10292

NO.	DATE	DRAWN BY	APPROVED BY	REVISION DESCRIPTION
1	10/23/19	MT/EP2		AS BUILT
2	10-19	MEL	PDK	FOR CONSTRUCTION
3	06-20	KLV	PDK	CONFORMING TO CONSTRUCTION RECORDS

BLACK HILLS ENERGY

WEST RAPID CITY SUBSTATION

WIRING DIAGRAM
PANEL 2

DRAWN BY EP2/MT DATE 7/1/19
APPROVED BY EP2/MT DATE 7/1/19

DWG NO. WRC-E-232B REVISION 3

P:\04\233\00\DWG\RECORD\WRC\CAD\WRC-E-233A.DWG

230 kV LINES LNG & SRC (PANEL 3) - REAR VIEW

DGR ENGINEERING
ROCK RAPIDS, IOWA
(712) 472-2531

GROUND BUS

GND
1. AA-Z27
2. CA-Z31
3. EA-Z31
4. GA-Z27

C953
TO ETH SW #2, ML3001, SLOT C-PORT 3 PANEL 2, WRC-E-232A
TO ETH SW #1, ML3001, SLOT C-PORT 3 PANEL 2, WRC-E-232A
BNC TEE
TO 21L-LNG, SEL-421, IRIG-B THIS DWG.
TO 51HT1, SEL-451, IRIG-B PANEL 4, WRC-E-234A
4970 BNC
CAT5E
87L-LNG
SEL-311L

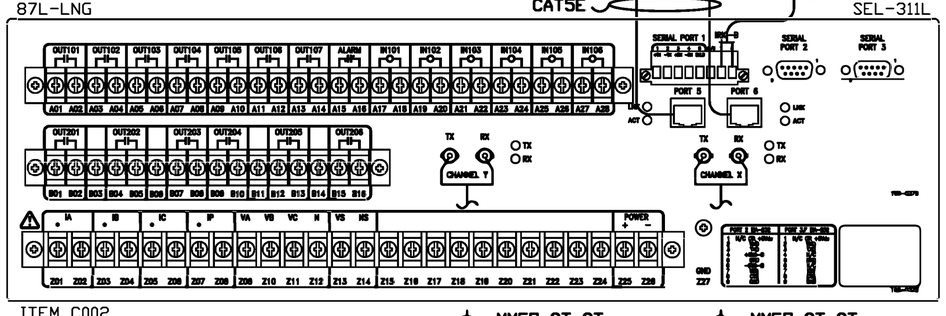

ITEM C002
TO MUX-EXP#1, 2 PANEL 1, WRC-E-231A
MMFO ST-ST
MMFO ST-ST
TO MUX-EXP#1, 3 PANEL 1, WRC-E-231A

AA

Z01. BA1~	A01. BC9	A15. CA-Z29	B01. BC1
Z02. BA3~	A02. BC11	A16. CA-A28	B02. BC3
Z03. BA5~	A03. BC13	A17. C10	B04. BC5
Z04. BA7~	A04. BC15	A18. AA-A20	B05. BC7
Z05. BA9~	A05.	A19. B10	B07.
Z06. BA11~	A06.	A20. BB20,AA-A18	B08.
Z07.	A07.	A21. E2	B09.
Z08.	A08.	A22. AA-Z26,AA-A24	B10.
Z09. BA13	A09. CA-A10	A23.	B12.
Z10. BA15	A10. B2	A24. AA-A22,AA-A26	B13.
Z11. BA17	A11. BC17	A25. CA-A17	B15.
Z12. BA19	A12. BC19	A26. AA-A24,BB20	B16.
Z13.	A13.	A27. BB17	
Z14.	A14.	A28. BB19	
Z25. CB1-2,BB18			
Z26. CB1-4,AA-A22			
Z27. GND1			

TS3 FMS-10A1 293RG-330HI

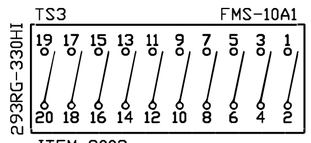

ITEM C003

BC

1. AA-B01	11. AA-A02	
2. F3,DC2	12. B5,CA-B02	
3. AA-B02	13. AA-A03	
4. F4,DC4	14. C1,DC14	
5. AA-B04	15. AA-A04	
6. F5,DC6	16. C2,DC16	
7. AA-B05	17. AA-A11	
8. F6,DC8	18.	
9. AA-A01	19. AA-A12	
10. B4,CA-B01	20.	

TS2 FMS-10FF

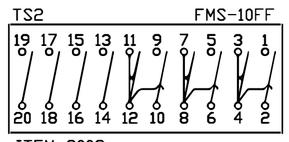

ITEM C003

BB

1.	11.	
2.	12.	
3.	13.	
4.	14.	
5.	15.	
6.	16.	
7.	17. AA-A27	
8.	18. AA-Z25,CA-A18	
9.	19. AA-A28	
10.	20. AA-A26	

TS1 FMS-10FF

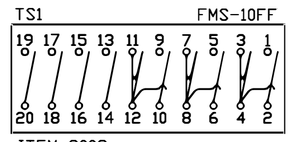

ITEM C003

BA

1. AA-Z01~	11. AA-Z06~	
2. K5~	12. K8~,BA8~	
3. AA-Z02~	13. AA-Z09	
4. BA8~	14. FU31-2	
5. AA-Z03~	15. AA-Z10	
6. K6~	16. FU31-4	
7. AA-Z04~	17. AA-Z11	
8. BA12~,BA4~	18. FU31-6	
9. AA-Z05~	19. AA-Z12	
10. K7~	20. N4	

C953
TO 21L-SRC, SEL-421, IRIG-B THIS DWG.
BNC TEE
C953
TO 87L-LNG, SEL-311L, IRIG-B THIS DWG.
21L-LNG
SEL-421

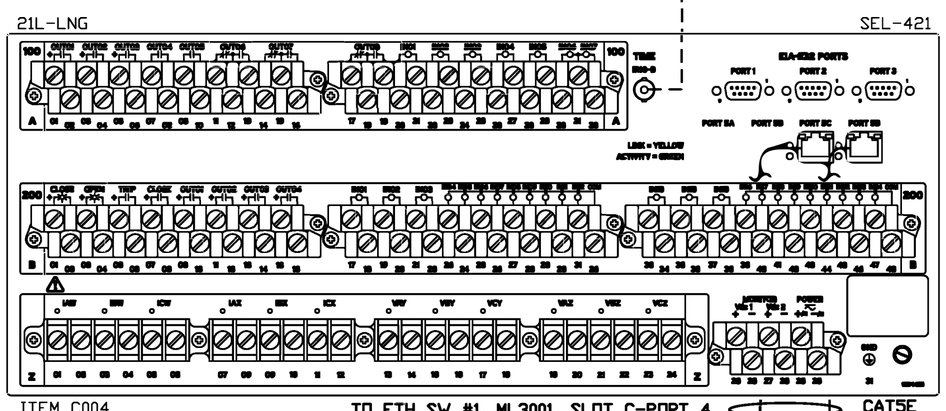

ITEM C004
TO ETH SW #1, ML3001, SLOT C-PORT 4 PANEL 2, WRC-E-232A
CAT5E
TO ETH SW #2, ML3001, SLOT C-PORT 4 PANEL 2, WRC-E-232A

CA

Z01. DB1~	Z25.	A17. AA-A25	B08. CA-A09	B32.
Z02. DB3~	Z26.	A18. BB18	B09. DC1	B33.
Z03. DB5~	Z27.	A19.	B10. DC3	B34.
Z04. DB7~	Z28.	A20. C12	B11. DC5	B35.
Z05. DB9~	Z29. CB2-2,AA-A15	A21. CA-Z30,CA-A29	B12. DC7	B36.
Z06. DB11~	Z30. CB2-4,CA-A21	A22. B12	B13.	B37.
Z07. DA1~	Z31. GND2	A23. CA-A29,CA-B18	B14.	B38.
Z08. DA3~	A01. DC9,CA-A24	A24. CA-A01	B15. F1	B39.
Z09. DA5~	A02. DC11,CA-A25	A25. CA-A02	B16. F2	B40.
Z10. DA7~	A03. DC13,CA-A26	A26. CA-A03	B17. E4	B41.
Z11. DA9~	A04. DC15,CA-A27	A27. CA-A04	B18. CA-A23	B42.
Z12. DA11~	A05.	A28. AA-A16	B19.	B43.
Z13. DA13	A06.	A29. CA-A21,CA-A23	B20.	B44.
Z14. CA-Z16	A07. CA-B03	A30.	B21.	B45.
Z15. DA15	A08. CA-A09	A31.	B22.	B46.
Z16. CA-Z18,CA-Z14	A09. CA-A08,CA-B08	A32.	B23.	B47.
Z17. DA17	A10. AA-A09	B01. BC10,CA-B05	B24.	B48.
Z18. DA19,CA-Z16	A11.	B02. BC12,CA-B06	B25.	
Z19.	A12. DC17	B03. CA-B07,CA-A07	B26.	
Z20.	A13. DC19	B04. B3	B27.	
Z21. DB13	A14.	B05. CA-B01,DC10	B28.	
Z22. DB15	A15.	B06. CA-B02,DC12	B29.	
Z23.	A16.	B07. B1,CA-B03	B30.	
Z24.			B31.	

TS6 FMS-10A1 293RG-330HI

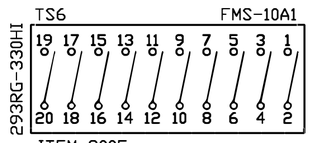

ITEM C005

DC

1. CA-B09	11. CA-A02	
2. BC2	12. CA-B06,FC4	
3. CA-B10	13. CA-A03	
4. BC4	14. BC14,FC6	
5. CA-B11	15. CA-A04	
6. BC6	16. BC16,FC8	
7. CA-B12	17. CA-A12	
8. BC8	18.	
9. CA-A01	19. CA-A13	
10. CA-B05,FC2	20.	

TS5 FMS-10FF

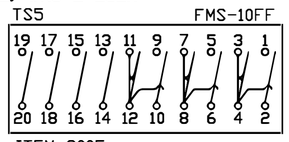

ITEM C005

DB

1. CA-Z01~	11. CA-Z06~	
2. J1~	12. J4~,DB8~	
3. CA-Z02~	13. CA-Z21	
4. DB8~	14. FU33-2	
5. CA-Z03~	15. CA-Z22	
6. J2~	16. FA20	
7. CA-Z04~	17.	
8. DB12~,DB4~	18.	
9. CA-Z05~	19.	
10. J3~	20.	

TS4 FMS-10FF

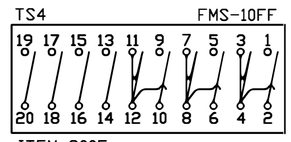

ITEM C005

DA

1. CA-Z07~	11. CA-Z12~	
2. K1~	12. K4~,DA8~	
3. CA-Z08~	13. CA-Z13	
4. DA8~	14. FU32-2	
5. CA-Z09~	15. CA-Z15	
6. K2~	16. FU32-4	
7. CA-Z10~	17. CA-Z17	
8. DA12~,DA4~	18. FU32-6	
9. CA-Z11~	19. CA-Z18	
10. K3~	20. N8	

C953
TO 87L-SRC, SEL-311L, IRIG-B THIS DWG.
BNC TEE
C953
TO 21L-LNG, SEL-421, IRIG-B THIS DWG.
21L-SRC
SEL-421

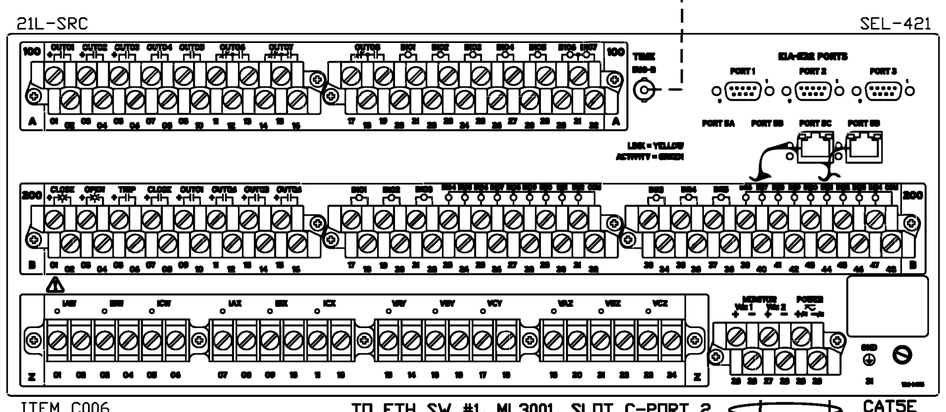

ITEM C006
TO ETH SW #1, ML3001, SLOT C-PORT 2 PANEL 2, WRC-E-232A
CAT5E
TO ETH SW #2, ML3001, SLOT C-PORT 2 PANEL 2, WRC-E-232A

EA

Z01. FB1~	Z25.	A17. GA-A25	B08. EA-A08	B32.
Z02. FB3~	Z26.	A18. CB3-2,GA-Z25	B09. FC1	B33.
Z03. FB5~	Z27.	A19.	B10. FC3	B34.
Z04. FB7~	Z28.	A20. C4	B11. FC5	B35.
Z05. FB9~	Z29. CB4-2,GA-A15	A21. EA-Z30,EA-A29	B12. FC7	B36.
Z06. FB11~	Z30. CB4-4,EA-A21	A22. D12	B13.	B37.
Z07. FA1~	Z31. GND3	A23. EA-B20	B14.	B38.
Z08. FA3~	A01. FC9,EA-A24	A24. EA-A01	B15.	B39.
Z09. FA5~	A02. FC11,EA-A25	A25. EA-A02	B16.	B40.
Z10. FA7~	A03. FC13,EA-A26	A26. EA-A03	B17. G2	B41.
Z11. FA9~	A04. FC15,EA-A27	A27. EA-A04	B18. EA-A29,EA-B20	B42.
Z12. FA11~	A05.	A28. GA-A16	B19. E8	B43.
Z13. FA13~	A06.	A29. EA-A21,EA-B18	B20. EA-B18,EA-A23	B44.
Z14. EA-Z16	A07. EA-B03	A30.	B21.	B45.
Z15. FA15	A08. EA-A09,EA-B08	A31.	B22.	B46.
Z16. EA-Z14,EA-Z18	A09. EA-A08	A32.	B23.	B47.
Z17. FA17	A10. GA-A09	B01. D4,EA-B05	B24.	B48.
Z18. EA-Z16,FA19	A11.	B02. D5,EA-B06	B25.	
Z19.	A12. FC17	B03. EA-A07,EA-B07	B26.	
Z20.	A13. FC19	B04. D3	B27.	
Z21. FB13	A14.	B05. EA-B01,FC10	B28.	
Z22. FB15	A15.	B06. EA-B02,FC12	B29.	
Z23.	A16.	B07. EA-B03,D1	B30.	
Z24.			B31.	

TS9 FMS-10A1 293RG-330HI

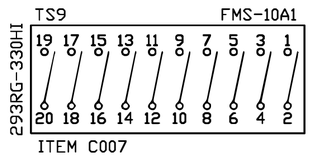

ITEM C007

FC

1. EA-B09	11. EA-A02	
2. DC10,HC2	12. EA-B06,HC12	
3. EA-B10	13. EA-A03	
4. DC12,HC4	14. C5,HC14	
5. EA-B11	15. EA-A04	
6. DC14,HC6	16. C6,HC16	
7. EA-B12	17. EA-A12	
8. DC16,HC8	18.	
9. EA-A01	19. EA-A13	
10. EA-B05,HC10	20.	

TS8 FMS-10FF

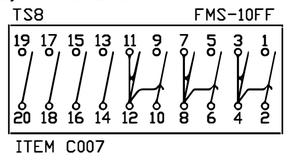

ITEM C007

FB

1. EA-Z01~	11. EA-Z06~	
2. M1~	12. M4~,FB8~	
3. EA-Z02~	13. EA-Z21	
4. FB8~	14. FU36-2	
5. EA-Z03~	15. EA-Z22	
6. M2~	16. P12	
7. EA-Z04~	17.	
8. FB12~,FB4~	18.	
9. EA-Z05~	19.	
10. M3~	20.	

TS7 FMS-10FF

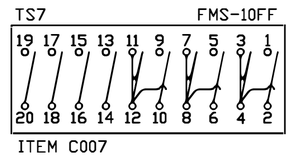

ITEM C007

FA

1. EA-Z07~	11. EA-Z12~	
2. L5~	12. L8~,FA8~	
3. EA-Z08~	13. EA-Z13	
4. FA8~	14. FU35-2	
5. EA-Z09~	15. EA-Z15	
6. L6~	16. FU35-4	
7. EA-Z10~	17. EA-Z17	
8. FA12~,FA4~	18. FU35-6	
9. EA-Z11~	19. EA-Z18	
10. L7~	20. DB16,P8	

C953
TO ETH SW #2, ML3001, SLOT C-PORT 1 PANEL 2, WRC-E-232A
TO ETH SW #1, ML3001, SLOT C-PORT 1 PANEL 2, WRC-E-232A
BNC TEE
TO CLOCK, SEL-2407, OUT4 PANEL 2, WRC-E-232A
TO 21L-SRC, SEL-421, IRIG-B THIS DWG.
CAT5E
4970 BNC
87L-SRC
SEL-311L

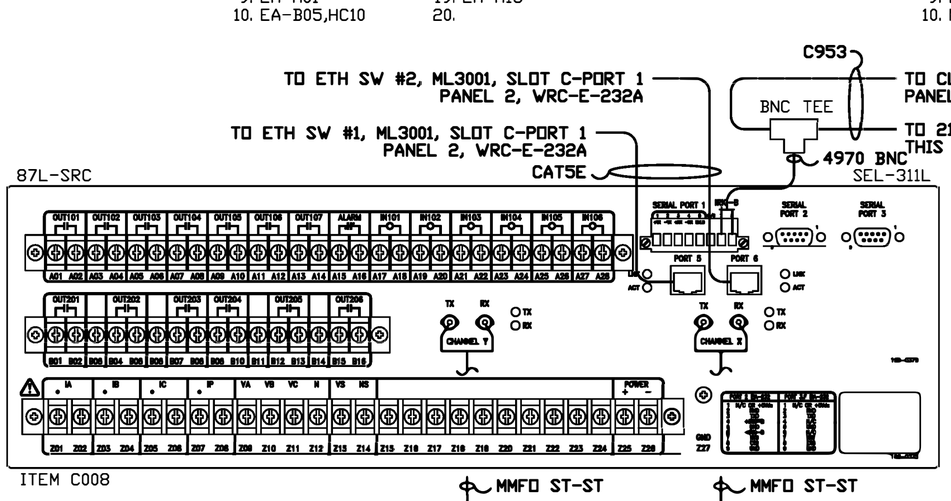

ITEM C008
MMFO ST-ST
MMFO ST-ST
TO MUX-EXP#1, 4 PANEL 1, WRC-E-231A
TO MUX-EXP#1, 5 PANEL 1, WRC-E-231A

GA

Z01. HA1~	A01. HC9	A15. EA-Z29	B01. HC1	
Z02. HA3~	A02. HC11	A16. EA-A28	B02. HC3	
Z03. HA5~	A03. HC13	A17. B8	B04. HC5	
Z04. HA7~	A04. HC15	A18. HB20,GA-A20	B05. HC7	
Z05. HA9~	A05.	A19. D10	B07.	
Z06. HA11~	A06.	A20. GA-A18	B08.	
Z07.	A07.	A21. E6	B09.	
Z08.	A08.	A22. GA-Z26,GA-A24	B10.	
Z09. HA13	A09. EA-A10	A23.	B12.	
Z10. HA15	A10. F7	A24. GA-A22,GA-A26	B13.	
Z11. HA17	A11. HC17	A25. EA-A17	B15.	
Z12. HA19	A12. HC19	A26. GA-A24,HB20	B16.	
Z13.	A13.	A27. HB17		
Z14.	A14.	A28. HB19		
Z25. EA-A18,HB18				
Z26. CB3-4,GA-A22				
Z27. GND4				

TS12 FMS-10A1 293RG-330HI

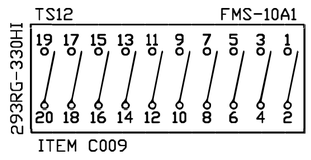

ITEM C009

HC

1. GA-B01	11. GA-A02	
2. FC2	12. FC12	
3. GA-B02	13. GA-A03	
4. FC4	14. FC14	
5. GA-B04	15. GA-A04	
6. FC6	16. FC16	
7. GA-B05	17. GA-A11	
8. FC8	18.	
9. GA-A01	19. GA-A12	
10. FC10	20.	

TS11 FMS-10FF

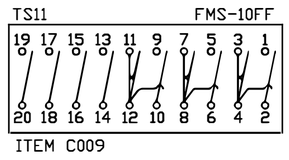

ITEM C009

HB

1.	11.	
2.	12.	
3.	13.	
4.	14.	
5.	15.	
6.	16.	
7.	17. GA-A27	
8.	18. GA-Z25	
9.	19. GA-A28	
10.	20. GA-A26,GA-A18	

TS10 FMS-10FF

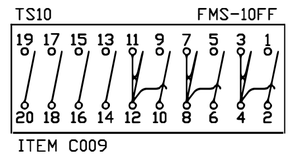

ITEM C009

HA

1. GA-Z01~	11. GA-Z06~	
2. M5~	12. M8~,HA8~	
3. GA-Z02~	13. GA-Z09	
4. HA8~	14. FU34-2	
5. GA-Z03~	15. GA-Z10	
6. M6~	16. FU34-4	
7. GA-Z04~	17. GA-Z11	
8. HA12~,HA4~	18. FU34-6	
9. GA-Z05~	19. GA-Z12	
10. M7~	20. P4	

NOTES:

1. ALL WIRING TO BE #12 AWG, SIS EXCEPT AS NOTED:
2. ALL TERMINATIONS TO USE FORK LUGS EXCEPT CT CIRCUIT CONNECTIONS WILL HAVE INSULATED RING TONGUE TYPE LUGS. CT CIRCUITS NOTED BY '~'
3. DESTINATION TYPE WIRE MARKERS.

EP2 JOB #10292
ELECTRICAL POWER PRODUCTS
DES MOINES, IA
(515)262-8161
www.ep2.com

NO.	DATE	DRAWN BY	APPROVED BY	REVISION DESCRIPTION
1	7/26/19	MT/EP2		UPDATED PER COMMENTS/ADDED COMM CABLES
2	10/23/19	MT/EP2		AS BUILT
3	06-20	KLV	PDK	CONFORMING TO CONSTRUCTION RECORDS

BLACK HILLS ENERGY

WEST RAPID CITY SUBSTATION
WIRING DIAGRAM
PANEL 3

DRAWN BY EP2/MT DATE 7/1/19
APPROVED BY EP2/MT DATE 7/1/19

DWG NO. WRC-E-233A REVISION 3

P:\04\233\00\DWG\RECORD\WRC\CAD\WRC-E-233B.DWG

230 kV LINES LNG & SRC (PANEL 3) - REAR VIEW

LEFT SIDE SHEET

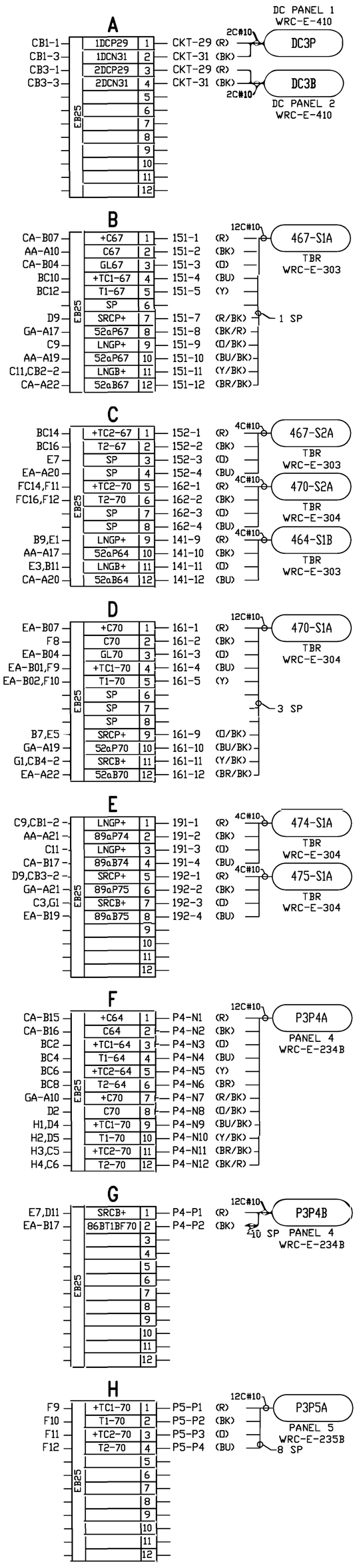



RIGHT SIDE SHEET



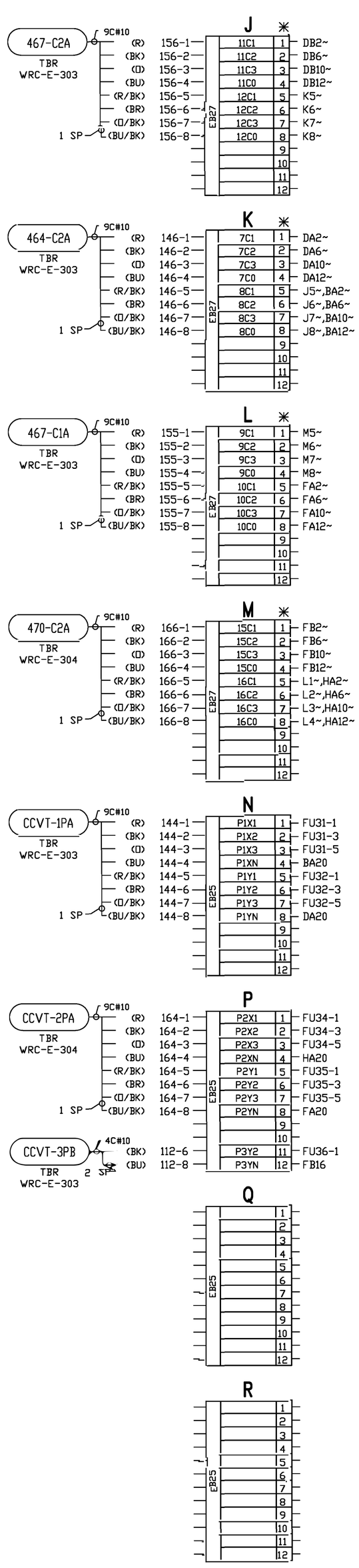

NOTES:

1. ALL WIRING TO BE #12 AWG, SIS EXCEPT AS NOTED.
2. ALL TERMINATIONS TO USE FORK LUGS EXCEPT CT CIRCUIT CONNECTIONS WILL HAVE INSULATED RING TONGUE TYPE LUGS. CT CIRCUITS NOTED BY '~'
3. DESTINATION TYPE WIRE MARKERS.

SYMBOLS LEGEND:

✳ INDICATES SHORTING TYPE TERMINAL BLOCK.

DGR ENGINEERING
ROCK RAPIDS, IOWA
(712) 472-2531

EP2 JOB #10292
DES MOINES, IA
(515)262-8161
www.ep2.com

ELECTRICAL POWER PRODUCTS

NO.	DESCRIPTION	APPROVED BY	DRAWN BY	DATE
1	AS BUILT	PJK	MT/EP2	10/23/19
2	FOR CONSTRUCTION	PJK	MEL	10-19
3	CONFORMING TO CONSTRUCTION RECORDS	PJK	KLV	06-20

DRAWN BY EP2/MT DATE 7/1/19
APPROVED BY EP2/MT DATE 7/1/19

BLACK HILLS ENERGY

WEST RAPID CITY SUBSTATION
WIRING DIAGRAM
PANEL 3

DWG NO. WRC-E-233B REVISION 3

P:\04\233\00\DWG\RECORD\WRC\CAD\WRC-E-234A.DWG

230 kV BUS T1 & T1 HS OC (PANEL 4) - REAR VIEW

DGR ENGINEERING
ROCK RAPIDS, IOWA
(712) 472-2531

GROUND BUS

GND

1. AA217
2. EA-Z31
3.
4.

87BT1 — SEL-587Z

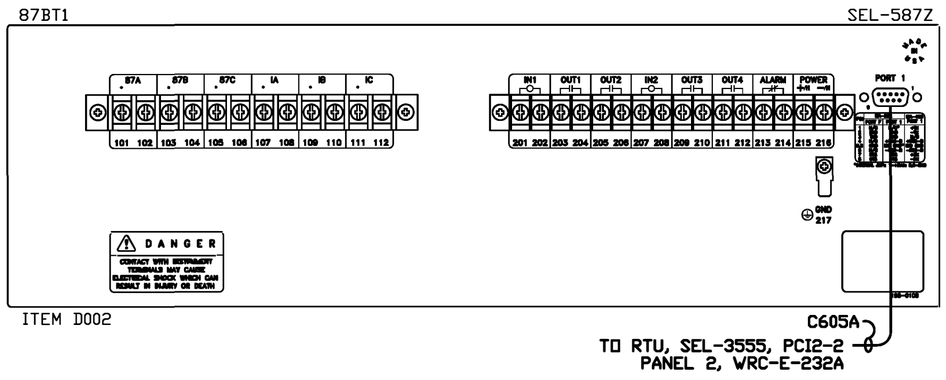

ITEM D002

C605A
TO RTU, SEL-3555, PCI2-2
PANEL 2, WRC-E-232A

AA

101. BA1~
102. BA3~
103. BA5~
104. BA7~
105. BA9~
106. BA11~
107.
108.
109.
110.
111.
112.

201. CB98
202. AA216,CA-D
203. BA13
204. BA15
205.
206.
207.
208.
209.
210.
211. BA17
212. BA19
213. CB2-2,CA21
214. EA-A28
215. CB1-2,CA12
216. CB1-4,AA202
217. GND1

TS3 — FMS-10A1 — 293RG-330CN

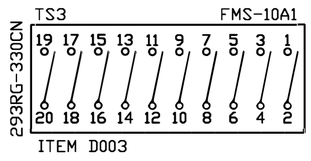

ITEM D003

BC

1. CB42
2. G1
3. CB48
4. D1
5. CB22
6. G3,FC10
7. CB28
8. D3,FC12
9. CB44
10. E5
11. CB46
12. D5
13. CB24
14. E7,FC14
15. CB26
16. D7,FC16
17.
18.
19.
20.

TS2 — FMS-10A1

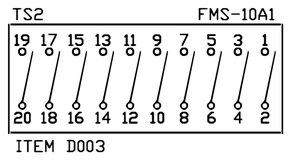

ITEM D003

BB

1. CB32
2. EA-B01,B4
3. CB38
4. EA-B02,B5
5. CB12
6. C1,FC2
7. CB18
8. C2,FC4
9. CB36
10. N9
11. CB34
12. N10
13. CB16
14. N11,FC6
15. CB14
16. N12,FC8
17.
18.
19.
20.

TS1 — FMS-10FF

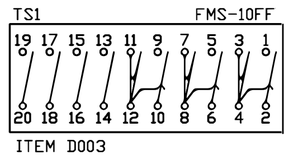

ITEM D003

BA

1. AA101~
2. L1~,CA25~
3. AA102~
4. BA8~,CA26~
5. AA103~
6. L2~,CA31~
7. AA104~
8. BA12~,BA4~
9. AA105~
10. L3~,CA35~
11. AA106~
12. L4~,BA8~
13. AA203
14. CA13
15. AA204
16. CB-G
17. AA211
18.
19. AA212
20.

86BT1 — 78PB10D

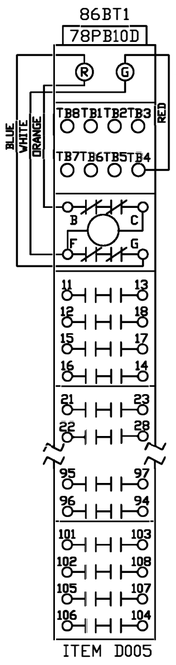

ITEM D005

CB

B. CA-D
G. BA16,CB84
TB4. CA41,CB86
11. EA-B14
12. BB5
13. EA-B15
14. BB15
15. N7
16. BB13
17. N8
18. BB7
21.
22. BC5
23.
24. BC13
25.
26. BC15
27.
28. BC7
31.
32. BB1
33.
34. BB11
35.
36. BB9
37.
38. BB3
41.
42. BC1
43.
44. BC9
45.
46. BC11
47.
48. BC3
51.
52. CA25~
53.
54. CA36~,CB58~
55.
56. CA31~
57.
58. CB54~,CB68~
61.
62. CA35~
63.
64. DC3
65.
66. DC1
67.
68. CB58~
71.
72. DC9
73.
74. DC15
75.
76. DC13
77.
78. DC11
81.
82. DC5
83.
84. CB-G
85.
86. CB-TB4,CB92
87.
88. DC7
91.
92. CB86
93.
94. Q2
95.
96. Q1
97.
98. AA201
101.
102.
103.
104.
105.
106.
107.
108.

87BT1C□ — 24PA204NJ

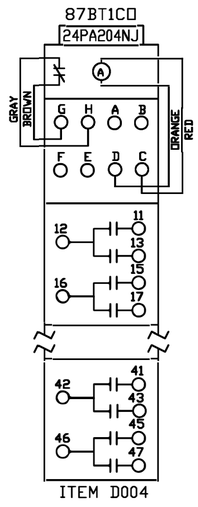

ITEM D004

CA

C. CA42
D. AA202,CB-B
G.
H.
11.
12. AA215,CA41
13. BA14
15.
16.
17.
21. AA213,DC2
22. EA-B19
23.
25. BA2~,CB52~
26. BA4~,CA32~
27.
31. BA6~,CB56~
32. CA26~,CA36~
33.
35. BA10~,CB62~
36. CA32~,CB54~
37.
41. CA12,CB-TB4
42. CA-C
43.
45.
46.
47.

TS6 — FMS-10A1 — 293RG-330CN

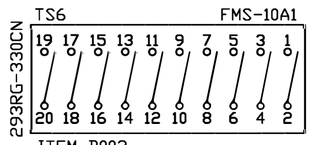

ITEM D003

DC

1. CB66
2. CA21,EA-Z29
3. CB64
4. EA-B17
5. CB82
6. P1
7. CB88
8. P2
9. CB72
10. G5
11. CB78
12. G6
13. CB76
14. E9
15. CB74
16. E10
17.
18.
19.
20.

TS5 — FMS-10A1

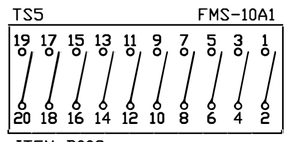

ITEM D003

DB

1.
2.
3.
4.
5.
6.
7.
8.
9.
10.
11.
12.
13.
14.
15.
16.
17.
18.
19.
20.

TS4 — FMS-10FF

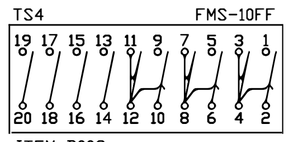

ITEM D003

DA

1.
2.
3.
4.
5.
6.
7.
8.
9.
10.
11.
12.
13.
14.
15.
16.
17.
18.
19.
20.

C953 — BNC TEE — C953

TO 87L-LNG, SEL-311L, IRIG-B
PANEL 3, WRC-E-233A

TO 87T1 PRI, SEL-487E, IRIG-B
PANEL 5, WRC-E-235A

51HT1 — SEL-451

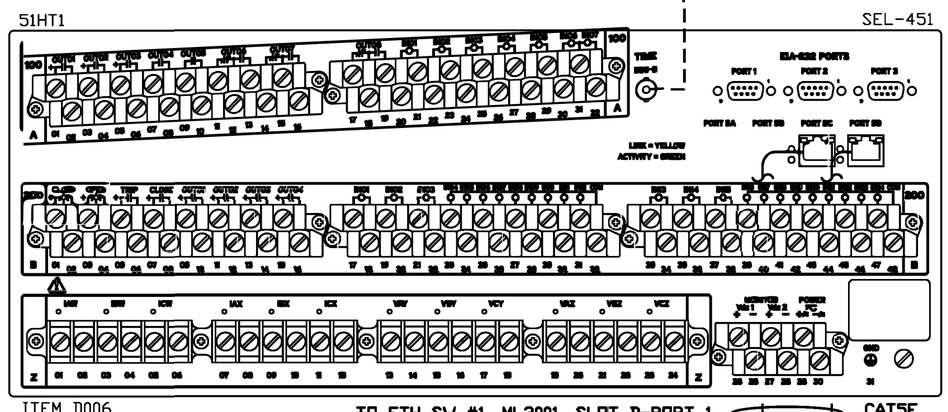

ITEM D006

TO ETH SW #1, ML3001, SLOT D-PORT 1
PANEL 2, WRC-E-232A

CAT5E

TO ETH SW #2, ML3001, SLOT D-PORT 1
PANEL 2, WRC-E-232A

EA

Z01. FA1~
Z02. FA3~
Z03. FA5~
Z04. FA7~
Z05. FA9~
Z06. FA11~
Z07. FB1~
Z08. FB3~
Z09. FB5~
Z10. FB7~
Z11. FB9~
Z12. FB11~
Z13. FA13
Z14. EA-Z16
Z15. FA15
Z16. EA-Z14,EA-Z18
Z17. FA17
Z18. FA19,EA-Z16
Z19.
Z20.
Z21. FB13
Z22. FB15
Z23.
Z24.
Z25.
Z26.
Z27.
Z28.
Z29. DC2
Z30. CB2-4,EA-A21
Z31. GND2
A01. FC1,EA-A26
A02. FC3,EA-A27
A03. FC5
A04. FC7
A05. FC9
A06. FC11
A07. FC13
A08. FC15
A09.
A10.
A11.
A12. FC17
A13. FC19
A14.
A15.
A16.
A17. Q3
A18. Q4
A19.
A20. B12
A21. EA-Z30,EA-A29
A22.
A23.
A24. EA-B09
A25. EA-B10
A26. EA-A01
A27. EA-A02
A28. AA214
A29. EA-A21,EA-A31
A30. C6
A31. EA-A29,EA-B18
A32.
B01. BB2,EA-B05
B02. BB4,EA-B06
B03. EA-B07
B04. B3
B05. EA-B01,FB18
B06. EA-B02,FB20
B07. EA-B13,EA-B03
B08. EA-B14
B09. FB17,EA-A24
B10. FB19,EA-A25
B11.
B12.
B13. EA-B07,B1
B14. EA-B08,CB11
B15. CB13
B16. N1
B17. DC4
B18. EA-A31,EA-B20
B19. CA22
B20. EA-B18
B21.
B22.
B23.
B24.
B25.
B26.
B27.
B28.
B29.
B30.
B31.
B32.
B33.
B34.
B35.
B36.
B37.
B38.
B39.
B40.
B41.
B42.
B43.
B44.
B45.
B46.
B47.
B48.

TS9 — FMS-10A1 — THD33-GR62

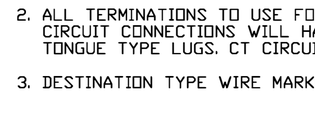

ITEM D007

FC

1. EA-A01
2. BB6
3. EA-A02
4. BB8
5. EA-A03
6. BB14
7. EA-A04
8. BB16
9. EA-A05
10. BC6
11. EA-A06
12. BC8
13. EA-A07
14. BC14
15. EA-A08
16. BC16
17. EA-A12
18.
19. EA-A13
20.

TS8 — FMS-10FF

ITEM D007

FB

1. EA-Z07~
2. L5~
3. EA-Z08~
4. FB8~
5. EA-Z09~
6. L6~
7. EA-Z10~
8. FB12~,FB4~
9. EA-Z11~
10. L7~
11. EA-Z12~
12. L8~,FB8~
13. EA-Z21
14. FU42-2
15. EA-Z22
16. M6
17. EA-B09
18. EA-B05
19. EA-B10
20. EA-B06

TS7 — FMS-10FF

ITEM D007

FA

1. EA-Z01~
2. K5~
3. EA-Z02~
4. FA8~
5. EA-Z03~
6. K6~
7. EA-Z04~
8. FA12~,FA4~
9. EA-Z05~
10. K7~
11. EA-Z06~
12. K8~,FA8~
13. EA-Z13
14. FU41-2
15. EA-Z15
16. FU41-4
17. EA-Z17
18. FU41-6
19. EA-Z18
20. M4

NOTES:

1. ALL WIRING TO BE #12 AWG, SIS EXCEPT AS NOTED.
2. ALL TERMINATIONS TO USE FORK LUGS EXCEPT CT CIRCUIT CONNECTIONS WILL HAVE INSULATED RING TONGUE TYPE LUGS. CT CIRCUITS NOTED BY '~'
3. DESTINATION TYPE WIRE MARKERS.

NO.	DATE	DRAWN BY	APPROVED BY	REVISION DESCRIPTION
1	7/26/19	MT/EP2		UPDATED PER COMMENTS/ADDED COMM CABLES
2	10/23/19	MT/EP2		AS BUILT
3	06-20	KLV	PDK	CONFORMING TO CONSTRUCTION RECORDS

ELECTRICAL POWER PRODUCTS
DES MOINES, IA
(515)262-8161
www.ep2.com
EP2 JOB #10292

BLACK HILLS ENERGY
WEST RAPID CITY SUBSTATION
WIRING DIAGRAM
PANEL 4

DRAWN BY	EP2/MT	DATE	7/1/19
APPROVED BY	EP2/MT	DATE	7/1/19

DWG NO. WRC-E-234A REVISION 3

P:\04\233\00\DWG\RECORD\WRC\CAD\WRC-E-234B.DWG

230 kV BUS T1 & T1 HS OC (PANEL 4) - REAR VIEW

LEFT SIDE SHEET

A

EB25

CB1-1	1DCP30	1	CKT-30 (R)	2C#10	DC4P
CB1-3	1DCN32	2	CKT-32 (BK)		
CB2-1	2DCP30	3	CKT-30 (R)	2C#10	DC4B
CB2-3	2DCN32	4	CKT-32 (BK)		
		5			
		6			
		7			
		8			
		9			
		10			
		11			
		12			

DC PANEL 1 WRC-E-410

DC PANEL 2 WRC-E-410

DC04A/15A **CB1**

ITEM D011

1. A1
2. AA215
3. A2
4. AA216

DC04B/15A **CB2**

ITEM D011

1. A3
2. AA213,B11
3. A4
4. EA-Z30

B

EB25

EA-B13	+C64	1	141-1 (R)	12C#10	464-S1A
N2	C64	2	141-2 (BK)		
EA-B04	GL64	3	141-3 (D)		
BB2,E1	+TC1-64	4	141-4 (BU)		
BB4,E2	T1-64	5	141-5 (Y)	7 SP	
	SP	6			
	SP	7			
	SP	8			
	SP	9			
	SP	10			
C5,CB2-2	XF1H□B+	11	IN101		
EA-A20	IN101	12			

TBR WRC-E-303

C

EB25

BB6,E3	+TC2-64	1	142-1 (R)	4C#10	464-S2A
BB8,E4	T2-64	2	142-2 (BK)		
	SP	3	142-3 (D)		
	SP	4	142-4 (BU)		
B11	XF1H□B+	5	111-3 (R)	4C#10	T1-S1B
EA-A30	XF1RF	6	111-4 (BK)		
		7		2 SP	
		8			
		9			
		10			
		11			
		12			

TBR WRC-E-303

TBR WRC-E-303

D

EB25

BC4	TS3-4	1	15-5 (R)	9C#10	22-S1B
G2	T1-07	2	15-6 (BK)		
BC8	TS3-8	3	15-7 (D)		
G4	T2-07	4	15-8 (BU)		
BC12	TS3-12	5	15-9 (R/BK)		
E6	T1-16	6	15-10 (BR)		
BC16	TS3-16	7	15-11 (D/BK)		
E8	T2-16	8	15-12 (BU/BK)	1 SP	
		9			
		10			
		11			
		12			

TBR WRC-E-301

E

EB25

N3,B4	+TC1-64	1	P5-Q1 (R)	12C#10	P4P5A
N4,B5	T1-64	2	P5-Q2 (BK)		
N5,C1	+TC2-64	3	P5-Q3 (D)		
N6,C2	T2-64	4	P5-Q4 (BU)		
BC10	+TC1-16	5	P5-Q5 (Y)		
D6	T1-16	6	P5-Q6 (BR)		
BC14	+TC2-16	7	P5-Q7 (R/BK)		
D8	T2-16	8	P5-Q8 (D/BK)		
DC14	XF1DP+	9	P5-Q9 (BU/BK)		
DC16	86BT1BF16	10	P5-Q10 (Y/BK)	2 SP	
		11			
		12			

PANEL 5 WRC-E-235B

F

EB25

		1
		2
		3
		4
		5
		6
		7
		8
		9
		10
		11
		12

G

EB25

BC2	+TC1-07	1	P8-Q1 (R)	12C#10	P4P8A
D2	T1-07	2	P8-Q2 (BK)		
BC6	+TC2-07	3	P8-Q3 (D)		
D4	T2-07	4	P8-Q4 (BU)		
DC10	CT4□B+	5	P8-Q5 (Y)		
DC12	86BT1BF07	6	P8-Q6 (BR)	6 SP	
		7			
		8			
		9			
		10			
		11			
		12			

PANEL 8 WRC-E-238B

H

EB25

		1
		2
		3
		4
		5
		6
		7
		8
		9
		10
		11
		12

RIGHT SIDE SHEET

FU41

6A

ITEM D013

1. M1
2. FA14
3. M2
4. FA16
5. M3
6. FA18

FU42

6A

ITEM D012

1. M5
2. FB14

J ✳

EB27

	17C1	1	K1~	4C#10	T1-C1A
	17C2	2	K2~		
	17C3	3	K3~		
	17C0	4	K4~		
		5			
		6			
		7			
		8			
		9			
		10			
		11			
		12			

114-1 (R) 114-2 (BK) 114-3 (D) 114-4 (BU)

TBR WRC-E-303

K ✳

EB27

	5C1	1	J1~,L1~	9C#10	464-C1A
	5C2	2	J2~,L2~		
	5C3	3	J3~,L3~		
	5C0	4	J4~,L4~		
	6C1	5	FA2~		
	6C2	6	FA6~		
	6C3	7	FA10~		
	6C0	8	FA12~	1 SP	
		9			
		10			
		11			
		12			

145-1 (R) 145-2 (BK) 145-3 (D) 145-4 (BU) 145-5 (R/BK) 145-6 (BR) 145-7 (D/BK) 145-8 (BU/BK)

TBR WRC-E-303

L ✳

EB27

	13C1	1	K1~,BA2~	9C#10	470-C1A
	13C2	2	K2~,BA6~		
	13C3	3	K3~,BA10~		
	13C0	4	K4~,BA12~		
	14C1	5	FB2~		
	14C2	6	FB6~		
	14C3	7	FB10~		
	14C0	8	FB12~	1 SP	
		9			
		10			
		11			
		12			

165-1 (R) 165-2 (BK) 165-3 (D) 165-4 (BU) 165-5 (R/BK) 165-6 (BR) 165-7 (D/BK) 165-8 (BU/BK)

TBR WRC-E-304

M

EB25

	P1Y1	1	FU41-1	4C#10	CCVT-1PB
	P1Y2	2	FU41-3		
	P1Y3	3	FU41-5		
	P1YN	4	FA20		
	P3X2	5	FU42-1	4C#10	CCVT-3PA
	P3XN	6	FB16	2 SP	
		7			
		8			
		9			
		10			
		11			
		12			

144-5 (R) 144-6 (BK) 144-7 (D) 144-8 (BU) 112-2 (BK) 112-4 (BU)

TBR WRC-E-303

TBR WRC-E-303

N

EB25

	+C64	1	EA-B16	12C#10	P3P4A
	C64	2	B2		
	+TC1-64	3	E1		
	T1-64	4	E2		
	+TC2-64	5	E3		
	T2-64	6	E4		
	+C70	7	CB15		
	C70	8	CB17		
	+TC1-70	9	BB10		
	T1-70	10	BB12		
	+TC2-70	11	BB14		
	T2-70	12	BB16		

P3-F1 (R) P3-F2 (BK) P3-F3 (D) P3-F4 (BU) P3-F5 (Y) P3-F6 (BR) P3-F7 (R/BK) P3-F8 (D/BK) P3-F9 (BU/BK) P3-F10 (Y/BK) P3-F11 (BR/BK) P3-F12 (BK/R)

PANEL 3 WRC-E-233B

P

EB25

	SRCB+	1	DC6	12C#10	P3P4B
	86BT1BF70	2	DC8	10 SP	
		3			
		4			
		5			
		6			
		7			
		8			
		9			
		10			
		11			
		12			

P3-G1 (R) P3-G2 (BK)

PANEL 3 WRC-E-233B

Q

EB25

	RIO3+	1	CB96	4C#10	P2P4A
	86BT1TR	2	CB94		
	RIO3+	3	EA-A17		
	51HT1AL	4	EA-A18		
		5			
		6			
		7			
		8			
		9			
		10			
		11			
		12			

P2-G1 (R) P2-G2 (BK) P2-G3 (D) P2-G4 (BU)

PANEL 2 WRC-E-232B

R

EB25

		1
		2
		3
		4
		5
		6
		7
		8
		9
		10
		11
		12

T

EB25

		1
		2
		3
		4
		5
		6
		7
		8
		9
		10
		11
		12

NOTES:

1. ALL WIRING TO BE #12 AWG, SIS EXCEPT AS NOTED.
2. ALL TERMINATIONS TO USE FORK LUGS EXCEPT CT CIRCUIT CONNECTIONS WILL HAVE INSULATED RING TONGUE TYPE LUGS. CT CIRCUITS NOTED BY '~'
3. DESTINATION TYPE WIRE MARKERS.

SYMBOLS LEGEND:

✳ INDICATES SHORTING TYPE TERMINAL BLOCK.

ROCK RAPIDS, IOWA
(712) 472-2531

DES MOINES, IA
(515)262-8161
www.ep2.com

ELECTRICAL POWER PRODUCTS

EP2 JOB #10292

NO.	DRAWN BY	DATE	REVISION DESCRIPTION
1	MT/EP2	10/23/19	AS BUILT
2	MEL	10-19	FOR CONSTRUCTION
3	KLV	06-20	CONFORMING TO CONSTRUCTION RECORDS

APPROVED BY: PJK

DRAWN BY: EP2/MT DATE: 7/1/19

APPROVED BY: EP2/MT DATE: 7/1/19

BLACK HILLS ENERGY

WEST RAPID CITY SUBSTATION

WIRING DIAGRAM
PANEL 4

DWG NO. WRC-E-234B REVISION 3

P:\04\233\00\DWG\RECORD\WRC\CAD\WRC-E-235A.DWG

230/69 kV XFMR T1 (PANEL 5) - REAR VIEW

GROUND BUS

GND
1. A12
2. RC-G
3. AA-Y31
4. EA-Z27
5. DA-GND

C953 TO 51HT1, SEL-451, IRIG-B PANEL 4, WRC-E-234A — BNC TEE — C953 TO MTR T1, SEL-735, IRIG-B THIS DWG.

XCVR-87T1 (PNL 5) SEL-2814M — TO XFMR T1, 2600 RTDM WRC-E-331A

87T1 PRI — SEL-487E

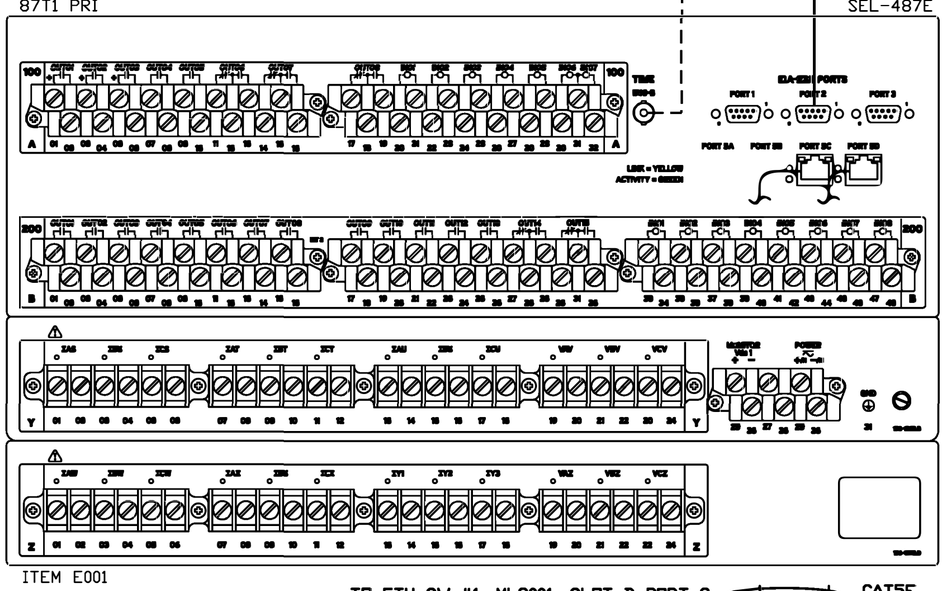

ITEM E001

TO ETH SW #1, ML3001, SLOT D-PORT 2 PANEL 2, WRC-E-232A — CAT5E

TO ETH SW #2, ML3001, SLOT D-PORT 2 PANEL 2, WRC-E-232A

AA

Z01. CA1~	Y01. BA1~	Y25.	A17. EA-A16
Z02. CA3~	Y02. BA3~	Y26.	A18. DA-A12
Z03. CA5~	Y03. BA5~	Y27.	A19.
Z04. CA7~	Y04. BA7~	Y28.	A20. D2
Z05. CA9~	Y05. BA9~	Y29. CB1-2,DA-A07	A21. AA-Y30,AA-A23
Z06. CA11~	Y06. BA11~	Y30. CB1-4,AA-A21	A22. DA-A09
Z07. CB1~	Y07. BB1~	Y31. GND3	A23. AA-A21,AA-A25
Z08. CB3~	Y08. BB3~	A01. CC1	A24. GB20
Z09. CB5~	Y09. BB5~	A02. CC3	A25. AA-A23,AA-A27
Z10. CB7~	Y10. BB7~	A03. CC5	A26. C6
Z11. CB9~	Y11. BB9~	A04. CC7	A27. AA-A25,AA-A29
Z12. CB11~	Y12. BB11~	A05. CC9	A28. C8
Z13.	Y13. BC1~	A06. CC11	A29. AA-A27,AA-B34
Z14.	Y14. BC3~	A07. CC13,AA-B35	A30.
Z15.	Y15. BC5~	A08. CC15,AA-B36	A31.
Z16.	Y16. BC7~	A09. CB17,AA-B37	A32.
Z17.	Y17. BC9~	A10. CB19,AA-B38	
Z18.	Y18. BC11~	A11.	
Z19.	Y19.	A12. F1	
Z20.	Y20.	A13. AA-B02	
Z21. BB15	Y21. BA13	A14.	
Z22. BB13	Y22. BA15	A15. CC17	
Z23.	Y23.	A16. CC19	
Z24.	Y24.		

B01. G1	B33. B10
B02. G2,AA-A13	B34. AA-A29,AA-B40
B33. B10	B35. AA-A07
B34. AA-A29,AA-B40	B36. AA-A08
B35. AA-A07	B37. AA-A09
B36. AA-A08	B38. AA-A10
B37. AA-A09	B39. Q10
B38. AA-A10	B40. AA-B34
B39. Q10	
B40. AA-B34	

TS3 FMS-10FF — 293RG-330DM — ITEM E002

BC

1. AA-Y13~	11. AA-Y18~
2. L1~	12. L4~,BC8~
3. AA-Y14~	13.
4. BC8~	14.
5. AA-Y15~	15.
6. L2~	16.
7. AA-Y16~	17.
8. BC12~,BC4~	18.
9. AA-Y17~	19.
10. L3~	20.

TS2 FMS-10FF — ITEM E002

BB

1. AA-Y07~	11. AA-Y12~
2. K1~	12. K4~,BB8~
3. AA-Y08~	13. AA-Z22
4. BB8~	14. FU53-2
5. AA-Y09~	15. AA-Z21
6. K2~	16. N4
7. AA-Y10~	17.
8. BB12~,BB4~	18.
9. AA-Y11~	19.
10. K3~	20.

TS1 FMS-10FF — ITEM E002

BA

1. AA-Y01~	11. AA-Y06~
2. J5~	12. J8~,BA8~
3. AA-Y02~	13. AA-Y21
4. BA8~	14. FU52-2
5. AA-Y03~	15. AA-Y22
6. J6~	16. N2
7. AA-Y04~	17.
8. BA12~,BA4~	18.
9. AA-Y05~	19.
10. J7~	20.

TS6 FMS-10A1 — 293RG-330HI — ITEM E003

CC

1. AA-A01	11. AA-A06
2. Q1	12. E2
3. AA-A02	13. AA-A07
4. Q2	14. B4
5. AA-A03	15. AA-A08
6. P1	16. B5
7. AA-A04	17. AA-A15
8. P2	18.
9. AA-A05	19. AA-A16
10. E1	20.

TS5 FMS-10FF — ITEM E003

CB

1. AA-Z07~	11. AA-Z12~
2. M9~	12. M12~,CB8~
3. AA-Z08~	13.
4. CB8~	14.
5. AA-Z09~	15.
6. M10~	16.
7. AA-Z10~	17. AA-A09
8. CB12~,CB4~	18. C1,GC14
9. AA-Z11~	19. AA-A10
10. M11~	20. C2,GC16

TS4 FMS-10FF — ITEM E003

CA

1. AA-Z01~	11. AA-Z06~
2. M1~	12. M4~,CA8~
3. AA-Z02~	13.
4. CA8~	14.
5. AA-Z03~	15.
6. M2~	16.
7. AA-Z04~	17.
8. CA12~,CA4~	18.
9. AA-Z05~	19.
10. M3~	20.

TS7 2FMS-10E1 — ITEM E005

DB

1. DA-Z07	11. DA-Z03~
2. FU51-2	12. J2~
3. DA-Z08	13. DA-Z04~
4. FU51-4	14. J10~
5. DA-Z09	15. DA-Z05~
6. FU51-6	16. J3~
7. DA-Z01~	17. DA-Z06~
8. J1~	18. J11~
9. DA-Z02~	19. DA-Z10
10. J9~	20. N12

CAT5E TO ETH SW #1, ML3001, SLOT G-PORT 4 PANEL 2, WRC-E-232A

MTR-T1 — SEL-735

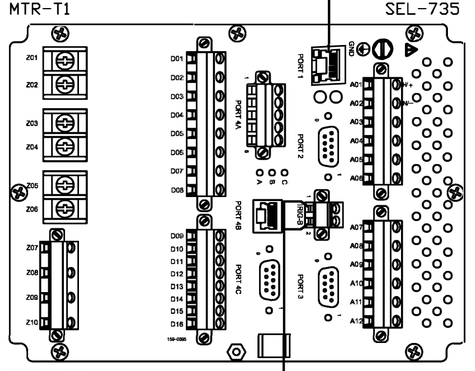

ITEM E004

DA

Z01. DB7~	A01. CB3-2,DA-A03
Z02. DB9~	A02. CB3-4,DA-A11
Z03. DB11~	A03. DA-A01,DA-A05
Z04. DB13~	A04. XA6
Z05. DB15~	A05. DA-A03,EA-A16
Z06. DB17~	A06. XA5
Z07. DB1	A07. AA-Y29,GB18
Z08. DB3	A08.
Z09. DB5	A09. AA-A22
Z10. DB19	A10. EA-A15
	A11. DA-A02,XA7
	A12. AA-A18
	GND. GND5

4970 BNC

C953 TO MTR T1, SEL-735, IRIG-B THIS DWG. — BNC TEE — 50Ω BNC TERMINATOR

C953 TO 87T1 PRI, SEL-487E, IRIG-B THIS DWG. — BNC TEE — C953 TO 87T1 BU, SEL-387, IRIG-B THIS DWG.

87T1 BU — 4970 BNC SEL-387E

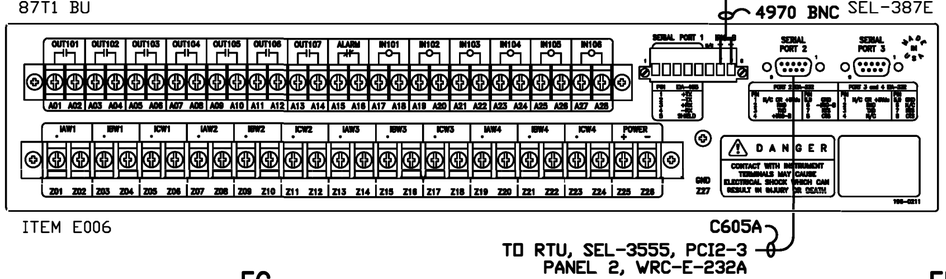

ITEM E006

C605A TO RTU, SEL-3555, PCI2-3 PANEL 2, WRC-E-232A

EA

Z01. FA1~	Z15. FC5~	A01. GC1	A15. DA-A10
Z02. FA3~	Z16. FC7~	A02. GC3	A16. DA-A05,AA-A17
Z03. FA5~	Z17. FC9~	A03. GC5	A17.
Z04. FA7~	Z18. FC11~	A04. GC7	A18.
Z05. FA9~	Z19. GA1~	A05. GC9	A19.
Z06. FA11~	Z20. GA3~	A06. GC11	A20.
Z07. FB1~	Z21. GA5~	A07. GC13	A21.
Z08. FB3~	Z22. GA7~	A08. GC15	A22.
Z09. FB5~	Z23. GA9~	A09. GB17	A23.
Z10. FB7~	Z24. GA11~	A10. GB19	A24.
Z11. FB9~	Z25. CB2-2	A11.	A25.
Z12. FB11~	Z26. CB2-4	A12.	A26.
Z13. FC1~	Z27. GND4	A13. GC17	A27.
Z14. FC3~		A14. GC19	A28.

TS10 FMS-10FF — 293RG-330DM — ITEM E002

FC

1. EA-Z13~	11. EA-Z18~
2. L5~	12. L8~,FC8~
3. EA-Z14~	13.
4. FC8~	14.
5. EA-Z15~	15.
6. L6~	16.
7. EA-Z16~	17.
8. FC12~,FC4~	18.
9. EA-Z17~	19.
10. L7~	20.

TS9 FMS-10FF — ITEM E002

FB

1. EA-Z07~	11. EA-Z12~
2. K5~	12. K8~,FB8~
3. EA-Z08~	13.
4. FB8~	14.
5. EA-Z09~	15.
6. K6~	16.
7. EA-Z10~	17.
8. FB12~,FB4~	18.
9. EA-Z11~	19.
10. K7~	20.

TS8 FMS-10FF — ITEM E002

FA

1. EA-Z01~	11. EA-Z06~
2. J9~	12. J12~,FA8~
3. EA-Z02~	13.
4. FA8~	14.
5. EA-Z03~	15.
6. J10~	16.
7. EA-Z04~	17.
8. FA12~,FA4~	18.
9. EA-Z05~	19.
10. J11~	20.

TS13 FMS-10A1 — 293RG-330HI — ITEM E003

GC

1. EA-A01	11. EA-A06
2. Q3	12. E4
3. EA-A02	13. EA-A07
4. Q4	14. CB18
5. EA-A03	15. EA-A08
6. P3	16. CB20
7. EA-A04	17. EA-A13
8. P4	18.
9. EA-A05	19. EA-A14
10. E3	20.

TS12 FMS-10FF — ITEM E003

GB

1.	11.
2.	12.
3.	13.
4.	14.
5.	15.
6.	16.
7.	17. EA-A09
8.	18. DA-A07
9.	19. EA-A10
10.	20. AA-A24

TS11 FMS-10FF — ITEM E003

GA

1. EA-Z19~	11. EA-Z24~
2. M5~	12. M8~,GA8~
3. EA-Z20~	13.
4. GA8~	14.
5. EA-Z21~	15.
6. M6~	16.
7. EA-Z22~	17.
8. GA12~,GA4~	18.
9. EA-Z23~	19.
10. M7~	20.

SHELF

ITEM E007

HA

NOTES:

1. ALL WIRING TO BE #12 AWG, SIS EXCEPT AS NOTED:
2. ALL TERMINATIONS TO USE FORK LUGS EXCEPT CT CIRCUIT CONNECTIONS WILL HAVE INSULATED RING TONGUE TYPE LUGS. CT CIRCUITS NOTED BY '~'
3. DESTINATION TYPE WIRE MARKERS.

RECPT7 — TRIPPLITE RS-0615-F

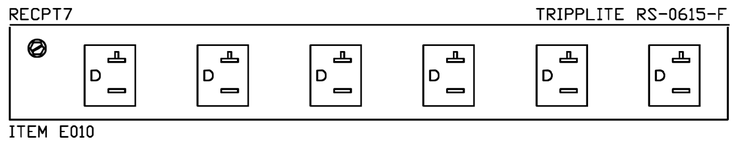

ITEM E010

MA

L. A10
N. A11
G. A12

NO.	DATE	DRAWN BY	APPROVED BY	REVISION DESCRIPTION
1	7/26/19	MT/EP2		ADDED COMM CABLES
2	10/23/19	MT/EP2		AS BUILT
3	06-20	KLV	PDK	CONFORMING TO CONSTRUCTION RECORDS

DRAWN BY EP2/MT DATE 7/1/19
APPROVED BY EP2/MT DATE 7/1/19

DWG NO. WRC-E-235A REVISION 3

BLACK HILLS ENERGY

WEST RAPID CITY SUBSTATION
WIRING DIAGRAM
PANEL 5

ELECTRICAL POWER PRODUCTS
EP2 JOB #10292
DES MOINES, IA
(515)262-8161
www.ep2.com

DGR ENGINEERING
ROCK RAPIDS, IOWA
(712) 472-2531

DGR ENGINEERING
ROCK RAPIDS, IOWA
(712) 472-2531

P:\04\233\00\DWG\RECORD\WRC\CAD\WRC-E-235B.DWG

230/69 kV XFMR T1 (PANEL 5) - REAR VIEW

LEFT SIDE SHEET

A

EB25

CB1-1	1DCP33	1	CKT-33 (R)	2C#10 → DC5P (DC PANEL 1 WRC-E-410)
CB1-3	1DCN35	2	CKT-35 (BK)	
CB3-1	2DCP33	3	CKT-33 (R)	2C#10 → DC5B (DC PANEL 2 WRC-E-410)
CB3-3	2DCN35	4	CKT-35 (BK)	
		5		
		6		
		7		
		8		
		9		
MA-L,RC1	AC2-36	10	CKT-36 (BK)	2C#10 → ACP2-C36 (AC PANEL 2 WRC-E-400)
MA-N,RC2	N	11	N (W)	
MA-G,GND1	ACG	12		

B

EB25

G1	+C16	1	101-1 (R)	12C#10 → 16-S1A (TBR WRC-E-302)
F2	C16	2	101-2 (BK)	
G3	GL16	3	101-3 (D)	
CC14,F3	+TC1-16	4	101-4 (BU)	
CC16,F4	T1-16	5	101-5 (Y)	7 SP
	SP	6		
	SP	7		
	SP	8		
C5,CB1-2	XF1DP+	9		
AA-B33	IN201	10		
	SP	11		
	SP	12		

C

EB25

CB18,F5	+TC2-16	1	102-1 (R)	4C#10 → 16-S2A (TBR WRC-E-302)
CB20,F6	T2-16	2	102-2 (BK)	
	SP	3	102-3 (D)	
	SP	4	102-4 (BU)	
C7,B9	XF1DP+	5	15-1 (R)	4C#10 → 22-S1A (TBR WRC-E-301)
AA-A26	89a22	6	15-2 (BK)	
D1,C5	XF1DP+	7	15-3 (D)	
AA-A28	89b22	8	15-4 (BU)	
		9		
		10		
		11		
		12		

D

EB25

C7,Q9	XF1DP+	1	111-1 (R)	4C#10 → T1-S1A (TBR WRC-E-303)
AA-A20	XF1PT	2	111-2 (BK)	2 SP
	SP	3		
	SP	4		
		5		
		6		
		7		
		8		
		9		
		10		
		11		
		12		

E

EB25

CC10	+TC1-07	1	P8-R1 (R)	12C#10 → P5P8A (PANEL 8 WRC-E-238B)
CC12	T1-07	2	P8-R2 (BK)	
GC10	+TC2-07	3	P8-R3 (D)	
GC12	T2-07	4	P8-R4 (BU)	8 SP
		5		
		6		
		7		
		8		
		9		
		10		
		11		
		12		

F

EB25

AA-A12	+C16	1	P9-Q1 (R)	12C#10 → P5P9A (PANEL 9 WRC-E-239B)
B2	C16	2	P9-Q2 (BK)	
G4,B4	+TC1-16	3	P9-Q3 (D)	
G5,B5	T1-16	4	P9-Q4 (BU)	
Q7,C1	+TC2-16	5	P9-Q5 (Y)	
Q8,C2	T2-16	6	P9-Q6 (BR)	6 SP
		7		
		8		
		9		
		10		
		11		
		12		

G

EB25

AA-B01,B1	+C16	1	P10-L1 (R)	12C#10 → P5P10A (PANEL 10 WRC-E-240B)
AA-B02	C16	2	P10-L2 (BK)	
B3	GL16	3	P10-L3 (D)	
Q5,F3	+TC1-16	4	P10-L4 (BU)	
Q6,F4	T1-16	5	P10-L5 (Y)	7 SP
		6		
		7		
		8		
		9		
		10		
		11		
		12		

H

EB25

		1
		2
		3
		4
		5
		6
		7
		8
		9
		10
		11
		12

XA

43P1
S-D B255XCXP

ITEM E008
ITEM E009

1. N5
2. FU51-1
3. N9
4. N10
5. DA-A06
6. DA-A04
7. DA-A11
8. N11
9. FU51-5
10. N7
11. FU51-3
12. N6

CB1

DC05A/15A

ITEM E011

1. A1,CB2-1
2. AA-Y29,B9
3. A2,CB2-3
4. AA-Y30

CB2

DC05B/15A

ITEM E011

1. CB1-1
2. EA-Z25
3. CB1-3
4. EA-Z26

CB3

DC05C/15A

ITEM E011A

1. A3
2. DA-A01
3. A4
4. DA-A02

RIGHT SIDE SHEET

FU51

6A

ITEM E015

1. XA2
2. DB2
3. XA11
4. DB4
5. XA9
6. DB6

FU52

6A

ITEM E014

1. N1
2. BA14

FU53

6A

ITEM E014

1. N3
2. BB14

J ✳

T1-C2A (9C#10) TBR WRC-E-303 → EB27

(R)	114-5	18C1	1	DB8~
(BK)	114-6	18C2	2	DB12~
(D)	114-7	18C3	3	DB16~
(BU)	114-8	18C0	4	J12~
(R/BK)	114-9	19C1	5	BA2~
(BR)	114-10	19C2	6	BA6~
(D/BK)	114-11	19C3	7	BA10~
1 SP (BU/BK)	114-12	19C0	8	BA12~
		18C11	9	FA2~,DB10~
		18C22	10	FA6~,DB14~
		18C33	11	FA10~,DB18~
		18C0	12	FA12~,J4~

K ✳

07-C1A (9C#10) TBR WRC-E-302 → EB27

(R)	75-1	34C1	1	BB2~
(BK)	75-2	34C2	2	BB6~
(D)	75-3	34C3	3	BB10~
(BU)	75-4	34C0	4	BB12~
(R/BK)	75-5	35C1	5	FB2~
(BR)	75-6	35C2	6	FB6~
(D/BK)	75-7	35C3	7	FB10~
1 SP (BU/BK)	75-8	35C0	8	FB12~
			9	
			10	
			11	
			12	

L ✳

16-C1A (9C#10) TBR WRC-E-302 → EB27

(R)	105-1	46C1	1	BC2~
(BK)	105-2	46C2	2	BC6~
(D)	105-3	46C3	3	BC10~
(BU)	105-4	46C0	4	BC12~
(R/BK)	105-5	47C1	5	FC2~
(BR)	105-6	47C2	6	FC6~
(D/BK)	105-7	47C3	7	FC10~
1 SP (BU/BK)	105-8	47C0	8	FC12~
			9	
			10	
			11	
			12	

M ✳

T1-C3A (9C#10) TBR WRC-E-302 → EB27

(R)	116-1	23C1	1	CA2~
(BK)	116-2	23C2	2	CA6~
(D)	116-3	23C3	3	CA10~
(BU)	116-4	23C0	4	CA12~
(R/BK)	116-5	24C1	5	GA2~
(BR)	116-6	24C2	6	GA6~
1 SP (D/BK)	116-7	24C3	7	GA10~
(BU/BK)	116-8	24C0	8	GA12~
T1-C4A (4C#10) (R)	116-9	25C1	9	CB2~
TBR WRC-E-302 (BK)	116-10	25C2	10	CB6~
(D)	116-11	25C3	11	CB10~
(BU)	116-12	25C0	12	CB12~

RC

RECPT

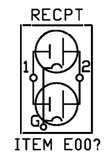

ITEM E00?

1. A10
2. A11
G. GND2

N

PT-5PA (2C#10) TBR WRC-E-302 (R)	104-1	P5X2	1	FA52-1
(BK)	104-2	P5XN	2	BA16
PT-9PB (2C#10) TBR WRC-E-302 (R)	94-2	P9X2	3	FU53-1
(BK)	94-4	P9XN	4	BB16
CCVT-1PC (4C#10) TBR WRC-E-303 (R)	144-1	P1X1	5	XA1
(BK)	144-2	P1X2	6	XA12
(D)	144-3	P1X3	7	XA10
(BU)	144-4	P1XN	8	N12
CCVT-2PB (4C#10) TBR WRC-E-304 (R)	164-1	P2X1	9	XA3
(BK)	164-2	P2X2	10	XA4
(D)	164-3	P2X3	11	XA8
(BU)	164-4	P2XN	12	DB20,N8

EB25

P

P3P5A (12C#10) PANEL 3 WRC-E-233B 8 SP → EB25

(R)	P3-H1	+TC1-70	1	CC6
(BK)	P3-H2	T1-70	2	CC8
(D)	P3-H3	+TC2-70	3	GC6
(BU)	P3-H4	T2-70	4	GC8
			5	
			6	
			7	
			8	
			9	
			10	
			11	
			12	

Q

P4P5A (12C#10) PANEL 4 WRC-E-234B → EB25

(R)	P4-E1	+TC1-64	1	CC2
(BK)	P4-E2	T1-64	2	CC4
(D)	P4-E3	+TC2-64	3	GC2
(BU)	P4-E4	T2-64	4	GC4
(Y)	P4-E5	+TC1-16	5	G4
(BR)	P4-E6	T1-16	6	G5
(R/BK)	P4-E7	+TC2-16	7	F5
(D/BK)	P4-E8	T2-16	8	F6
(BU/BK)	P4-E9	XF1DP+	9	D1
2 SP (Y/BK)	P4-E10	86BT1BF16	10	AA-B39
			11	
			12	

R

EB25

		1
		2
		3
		4
		5
		6
		7
		8
		9
		10
		11
		12

NOTES:

1. ALL WIRING TO BE #12 AWG, SIS EXCEPT AS NOTED.
2. ALL TERMINATIONS TO USE FORK LUGS EXCEPT CT CIRCUIT CONNECTIONS WILL HAVE INSULATED RING TONGUE TYPE LUGS. CT CIRCUITS NOTED BY '~'
3. DESTINATION TYPE WIRE MARKERS.

SYMBOLS LEGEND:

✳ INDICATES SHORTING TYPE TERMINAL BLOCK.

ELECTRICAL POWER PRODUCTS

EP2 JOB #10292

DES MOINES, IA
(515)262-8161
www.ep2.com

NO.	DRAWN BY	DATE	REVISION DESCRIPTION	APPROVED BY
1	MT/EP2	10/23/19	AS BUILT	PDK
2	MEL	10-19	FOR CONSTRUCTION	PDK
3	KLV	06-20	CONFORMING TO CONSTRUCTION RECORDS	PDK

DRAWN BY EP2/MT DATE 7/1/19
APPROVED BY EP2/MT DATE 7/1/19

BLACK HILLS ENERGY

WEST RAPID CITY SUBSTATION
WIRING DIAGRAM
PANEL 5

DWG NO. WRC-E-235B REVISION 3

P:\04\233\00\DWG\RECORD\WRC\CAD\WRC-E-238A.DWG

69 kV LINES CT4 & LNG3 (PANEL 8) - REAR VIEW

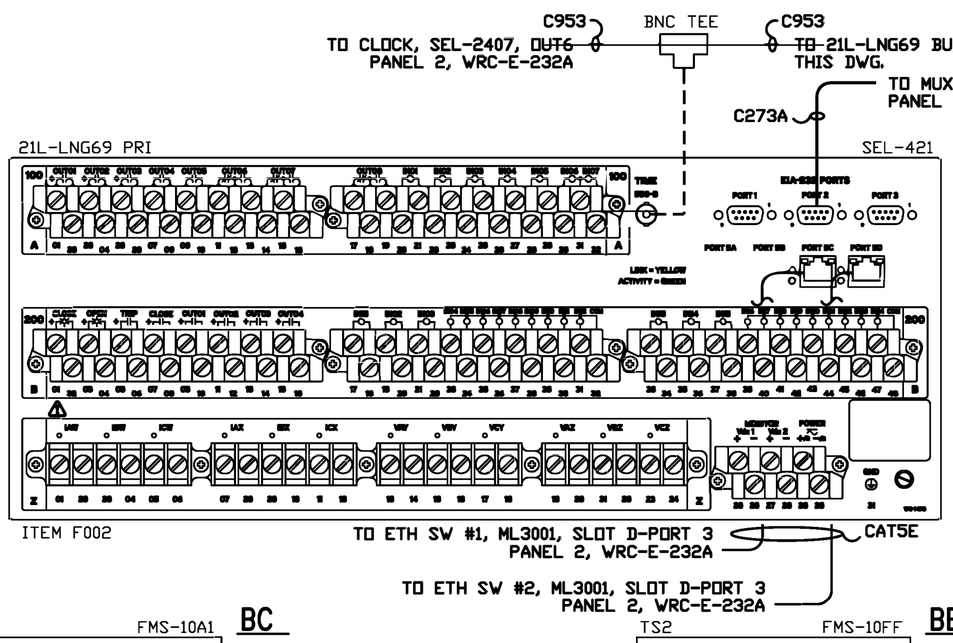

GND

GROUND BUS

1. AA-Z31
2. CA-Z31
3. EA-Z31
4. GA-Z27

AA

Z01. BA1~	Z25.	A17. CA-Z29	B08. AA-A09	B32.
Z02. BA3~	Z26.	A18. CA-A28	B09. BC9	B33.
Z03. BA5~	Z27.	A19.	B10. BC11	B34.
Z04. BA7~	Z28.	A20. IA3	B11. BC13	B35.
Z05. BA9~	Z29. CB1-2,CA-A17	A21. AA-Z30,AA-A29	B12. BC15	B36.
Z06. BA11~	Z30. CB1-4,AA-A21	A22. D10	B13. CA-A10	B37.
Z07. BB1~	Z31. GND1	A23. AA-B22	B14. D2	B38.
Z08. BB3~	A01. BC1,AA-A24	A24. AA-A01	B15.	B39.
Z09. BB5~	A02. BC3,AA-A25	A25. AA-A02	B16.	B40.
Z10. BB7~	A03. BC5,AA-A26	A26. AA-A03	B17. F2	B41.
Z11. BB9~	A04. BC7,AA-A27	A27. AA-A04	B18. AA-A29,AA-B20	B42.
Z12. BB11~	A05.	A28. CA-A18	B19.	B43.
Z13. BA13	A06.	A29. AA-A21,AA-B18	B20. AA-B18,AA-B22	B44.
Z14. AA-Z16	A07. IA5	A30.	B21. G8	B45.
Z15. BA15	A08. IA7	A31.	B22. AA-B20,AA-A23	B46.
Z16. AA-Z14,AA-Z18	A09. AA-B08,IA8	A32.	B23.	B47.
Z17. BA17	A10. CA-B13	B01. BC2,AA-B05	B24.	B48.
Z18. BA19,AA-Z16	A11.	B02. BC4,AA-B06	B25.	
Z19.	A12. BC19	B03. AA-B07,IA6	B26.	
Z20.	A13. BC17	B04. B3	B27.	
Z21. BB13	A14.	B05. AA-B01,DC2	B28.	
Z22. BB15	A15.	B06. AA-B02,DC4	B29.	
Z23.	A16.	B07. B1,AA-B03	B30.	
Z24.			B31.	

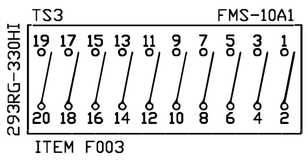

BC

1. AA-A01
2. B4,AA-B01
3. AA-A02
4. B5,AA-B02
5. AA-A03
6. C1,DC6
7. AA-A04
8. C2,DC8
9. AA-B09
10. D4,CA-B01
11. AA-B10
12. D5,CA-B02
13. AA-B11
14. C5,DC14
15. AA-B12
16. C6,DC16
17. AA-A13
18.
19. AA-A12
20.

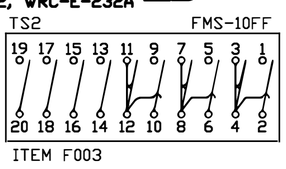

BB

1. AA-Z07~
2. K5~
3. AA-Z08~
4. BB8~
5. AA-Z09~
6. K6~
7. AA-Z10~
8. BB12~,BB4~
9. AA-Z11~
10. K7~
11. AA-Z12~
12. K8~,BB8~
13. AA-Z21
14. FU83-2
15. AA-Z22
16. N12
17.
18.
19.
20.

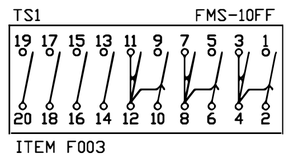

BA

1. AA-Z01~
2. J1~
3. AA-Z02~
4. BA8~
5. AA-Z03~
6. J2~
7. AA-Z04~
8. BA12~,BA4~
9. AA-Z05~
10. J3~
11. AA-Z06~
12. J4~,BA8~
13. AA-Z13
14. FU81-2
15. AA-Z15
16. FU81-4
17. AA-Z17
18. FU81-6
19. AA-Z18
20. N4

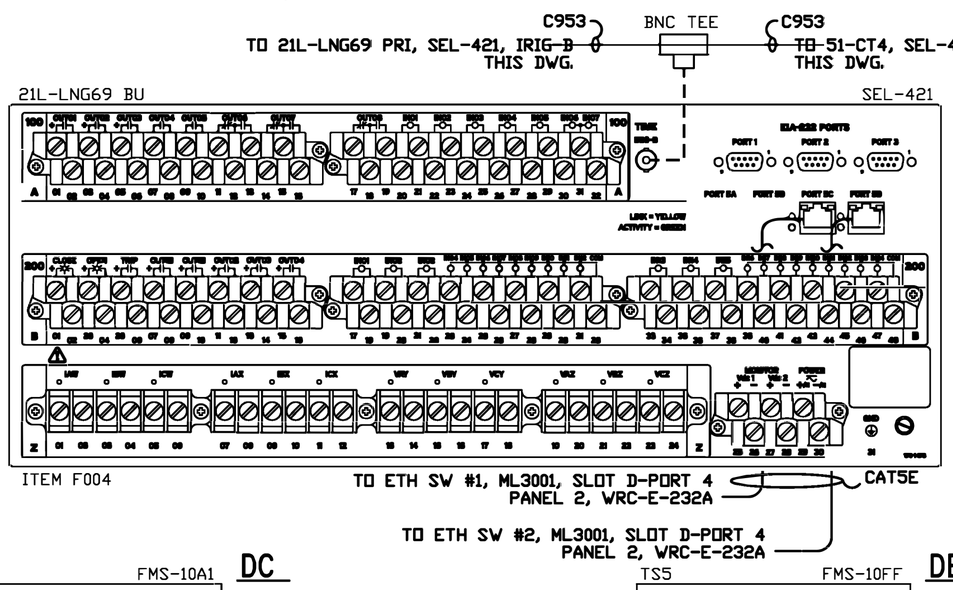

CA

Z01. DA1~	Z25.	A17. AA-Z29	B08. CA-A09	B32.
Z02. DA3~	Z26.	A18. AA-A28	B09. DC1	B33.
Z03. DA5~	Z27.	A19.	B10. DC3	B34.
Z04. DA7~	Z28.	A20. B12	B11. DC5	B35.
Z05. DA9~	Z29. CB2-2,AA-A17	A21. CA-Z30,CA-A29	B12. DC7	B36.
Z06. DA11~	Z30. CB2-4,CA-A21	A22. IB3	B13. AA-A10	B37.
Z07. DB1~	Z31. GND2	A23. CA-A29,CA-B18	B14. G1	B38.
Z08. DB3~	A01. DC9,CA-A24	A24. CA-A01	B15.	B39.
Z09. DB5~	A02. DC11,CA-A25	A25. CA-A02	B16.	B40.
Z10. DB7~	A03. DC13,CA-A26	A26. CA-A03	B17. F4	B41.
Z11. DB9~	A04. DC15,CA-A27	A27. CA-A04	B18. CA-A23	B42.
Z12. DB11~	A05.	A28. CA-A18	B19.	B43.
Z13. DA13	A06.	A29. CA-A21,CA-A23	B20.	B44.
Z14. CA-Z16	A07. IB5	A30.	B21.	B45.
Z15. DA15	A08. IB7	A31.	B22.	B46.
Z16. CA-Z14,CA-Z18	A09. CA-B08,IB8	A32.	B23.	B47.
Z17. DA17	A10. AA-B13	B01. BC10,CA-B05	B24.	B48.
Z18. DA19,CA-Z16	A11.	B02. BC12,CA-B06	B25.	
Z19.	A12. DC19	B03. CA-B07,IB6	B26.	
Z20.	A13. DC17	B04. D3	B27.	
Z21. DB13	A14.	B05. CA-B01,DC10	B28.	
Z22. DB15	A15.	B06. CA-B02,DC12	B29.	
Z23.	A16.	B07. D1,CA-B03	B30.	
Z24.			B31.	

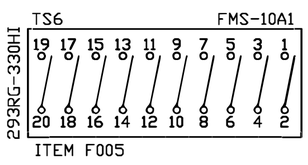

DC

1. CA-B09
2. AA-B05
3. CA-B10
4. AA-B06
5. CA-B11
6. BC6
7. CA-B12
8. BC8
9. CA-A01
10. CA-B05,FC2
11. CA-A02
12. CA-B06,FC4
13. CA-A03
14. BC14,FC6
15. CA-A04
16. BC16,FC8
17. CA-A13
18.
19. CA-A12
20.

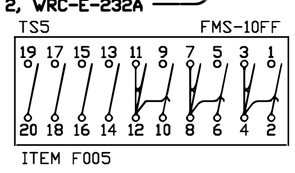

DB

1. CA-Z07~
2. K1~
3. CA-Z08~
4. DB8~
5. CA-Z09~
6. K2~
7. CA-Z10~
8. DB12~,DB4~
9. CA-Z11~
10. K3~
11. CA-Z12~
12. K4~,DB8~
13. CA-Z21
14. FU84-2
15. CA-Z22
16. FA20
17.
18.
19.
20.

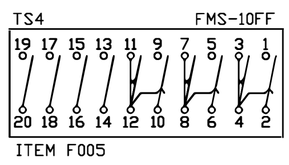

DA

1. CA-Z01~
2. J5~
3. CA-Z02~
4. DA8~
5. CA-Z03~
6. J6~
7. CA-Z04~
8. DA12~,DA4~
9. CA-Z05~
10. J7~
11. CA-Z06~
12. J8~,DA8~
13. CA-Z13
14. FU82-2
15. CA-Z15
16. FU82-4
17. CA-Z17
18. FU82-6
19. CA-Z18
20. N8

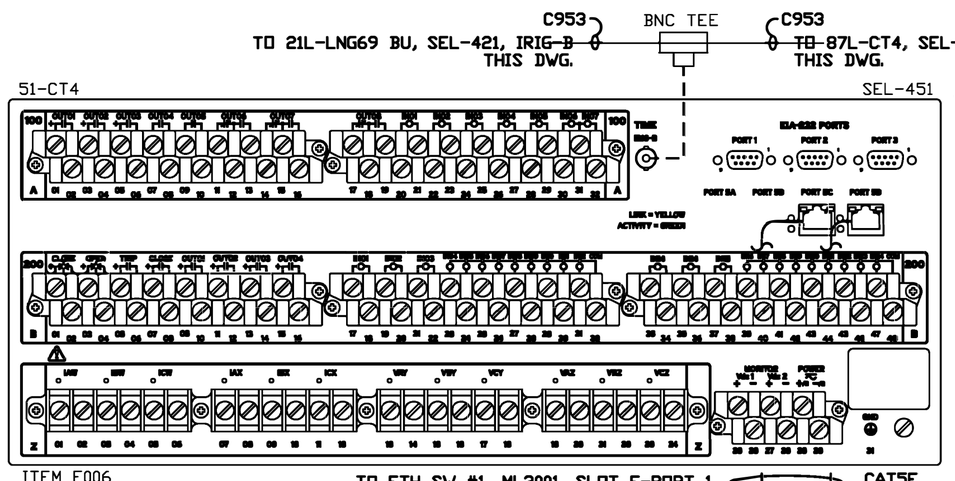

EA

Z01. FA1~	Z25.	A17. GA-A25	B08. EA-B14	B32.
Z02. FA3~	Z26.	A18. CB3-2,GA-Z25	B09.	B33.
Z03. FA5~	Z27.	A19.	B10.	B34.
Z04. FA7~	Z28.	A20. C8	B11.	B35.
Z05. FA9~	Z29. CB4-2,GA-A15	A21. EA-Z30,EA-A29	B12.	B36.
Z06. FA11~	Z30. CB4-4,EA-A21	A22. E12	B13. EA-B07	B37.
Z07. FB1~	Z31. GND3	A23. EA-B20,EA-A31	B14. EA-B15,EA-B08	B38.
Z08. FB3~	A01. FC9,EA-A24	A24. EA-A01	B15. EA-B14	B39.
Z09. FB5~	A02. FC11,EA-A25	A25. EA-A02	B16. GA-A09	B40.
Z10. FB7~	A03. FC13,EA-A26	A26. EA-A03	B17. Q6	B41.
Z11. FB9~	A04. FC15,EA-A27	A27. EA-A04	B18. EA-A29,EA-B20	B42.
Z12. FB11~	A05. FC1	A28. GA-A16	B19. F8	B43.
Z13. FA13	A06. FC3	A29. EA-A21,EA-B18	B20. EA-B18,EA-A23	B44.
Z14. EA-Z16	A07. FC5	A30. FB-20	B21.	B45.
Z15. FA15	A08. FC7	A31. EA-A23	B22.	B46.
Z16. EA-Z14,EA-Z18	A09.	A32.	B23.	B47.
Z17. FA17	A10.	B01. EA-B05,FC10	B24.	B48.
Z18. FA19,EA-Z16	A11.	B02. EA-B06,FC12	B25.	
Z19.	A12. FC17	B03. E1,EA-B07	B26.	
Z20.	A13. FC19	B04. E3	B27.	
Z21. FB13	A14.	B05. E4,EA-B01	B28.	
Z22. FB15	A15.	B06. E5,EA-B02	B29.	
Z23.	A16.	B07. EA-B03,EA-B13	B30.	
Z24.			B31.	

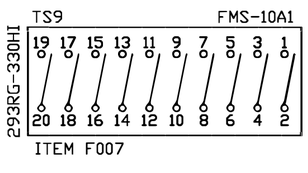

FC

1. EA-A05
2. DC10,HC2
3. EA-A06
4. DC12,HC4
5. EA-A07
6. DC14,HC6
7. EA-A08
8. DC16,HC8
9. EA-A01
10. EA-B01,HC10
11. EA-A02
12. EA-B02,HC12
13. EA-A03
14. C9,HC14
15. EA-A04
16. C10,HC16
17. EA-A12
18.
19. EA-A13
20.

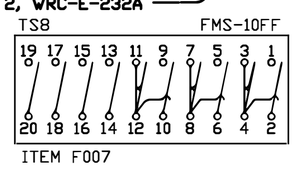

FB

1. EA-Z07~
2. M1~
3. EA-Z08~
4. M5~
5. EA-Z09~
6. M2~
7. EA-Z10~
8. M6~
9. EA-Z11~
10. M3~
11. EA-Z12~
12. M7~
13. EA-Z21
14. FU87-2
15. EA-Z22
16. P12
17. H1
18. GA-A15
19. H2
20. EA-A30

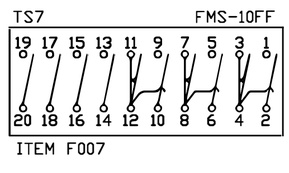

FA

1. EA-Z01~
2. L5~
3. EA-Z02~
4. L1~
5. EA-Z03~
6. L6~
7. EA-Z04~
8. L2~
9. EA-Z05~
10. L7~
11. EA-Z06~
12. L3~
13. EA-Z13
14. FU86-2
15. EA-Z15
16. FU86-4
17. EA-Z17
18. FU86-6
19. EA-Z18
20. DB16,P8

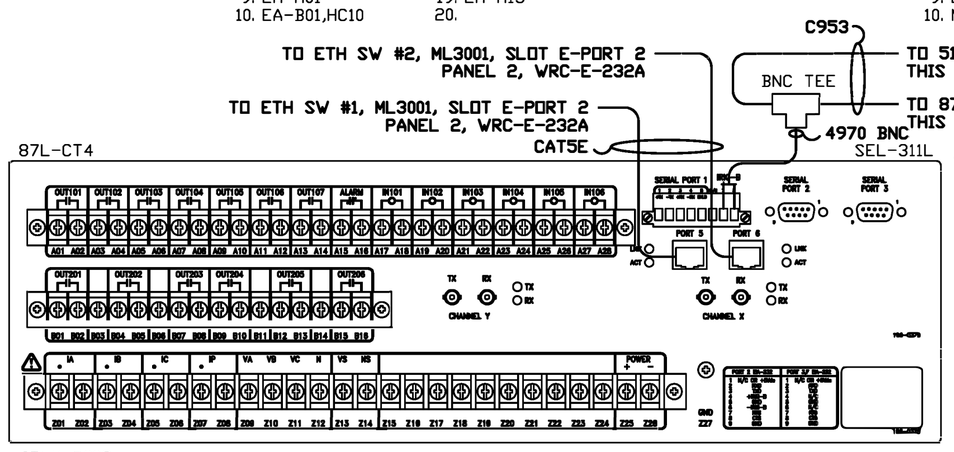

GA

Z01. HA1~	Z17.	A01. HC9	A17. D8	B01. HC1
Z02. HA3~	Z18.	A02. HC11	A18. HB20,GA-A20	B02. HC3
Z03. HA5~	Z19.	A03. HC13	A19. E10	B03.
Z04. HA7~	Z20.	A04. HC15	A20. GA-A18	B04. HC5
Z05. HA9~	Z21.	A05.	A21. F6	B05. HC7
Z06. HA11~	Z22.	A06.	A22. GA-Z26,GA-A24	B06.
Z07.	Z23.	A07.	A23.	B07.
Z08.	Z24.	A08.	A24. GA-A22,GA-A26	B08.
Z09. HA13	Z25. EA-A18,HB18	A09. EA-B16	A25. EA-A17	B09.
Z10. HA15	Z26. CB3-4,GA-A22	A10. E2	A26. GA-A24,HB20	B10.
Z11. HA17	Z27. GND4	A11. HC17	A27. HB17	B11.
Z12. HA19		A12. HC19	A28. HB19	B12.
Z13.		A13.		B13.
Z14.		A14.		B14.
Z15.		A15. EA-Z29,FB-18		B15.
Z16.		A16. EA-A28		B16.

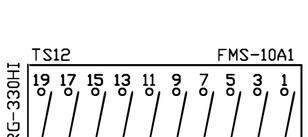

HC

1. GA-B01
2. FC2
3. GA-B02
4. FC4
5. GA-B04
6. FC6
7. GA-B05
8. FC8
9. GA-A01
10. FC10
11. GA-A02
12. FC12
13. GA-A03
14. FC14
15. GA-A04
16. FC16
17. GA-A11
18.
19. GA-A12
20.

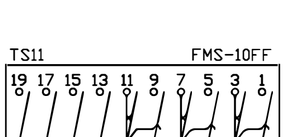

HB

1.
2.
3.
4.
5.
6.
7.
8.
9.
10.
11.
12.
13.
14.
15.
16.
17. GA-A27
18. GA-Z25
19. GA-A28
20. GA-A26,GA-A18

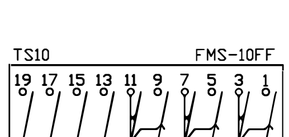

HA

1. GA-Z01~
2. M5~
3. GA-Z02~
4. HA8~
5. GA-Z03~
6. M6~
7. GA-Z04~
8. HA12~,HA4~
9. GA-Z05~
10. M7~
11. GA-Z06~
12. M8~,HA8~
13. GA-Z09
14. FU85-2
15. GA-Z10
16. FU85-4
17. GA-Z11
18. FU85-6
19. GA-Z12
20. P4

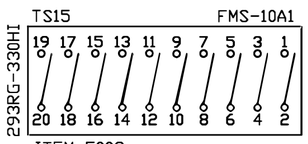

IC

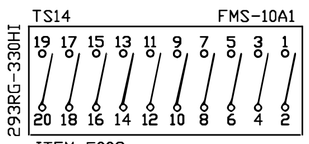

IB

1. F3
2. D11
3. CA-A22
4. D12
5. CA-A07
6. CA-B03
7. CA-A08
8. CA-A09

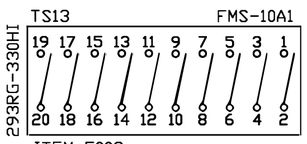

IA

1. F1
2. B9
3. AA-A20
4. B10
5. AA-A07
6. AA-B03
7. AA-A08
8. AA-A09

NOTES:

1. ALL WIRING TO BE #12 AWG, SIS EXCEPT AS NOTED:
2. ALL TERMINATIONS TO USE FORK LUGS EXCEPT CT CIRCUIT CONNECTIONS WILL HAVE INSULATED RING TONGUE TYPE LUGS. CT CIRCUITS NOTED BY '~'
3. DESTINATION TYPE WIRE MARKERS.

DGR ENGINEERING
ROCK RAPIDS, IOWA
(712) 472-2531

ELECTRICAL POWER PRODUCTS
EP2 JOB #10292
EP2
DES MOINES, IA
(515)262-8161
www.ep2.com

NO.	DATE	DRAWN BY	APPROVED BY	REVISION DESCRIPTION
0	06-20	KLV	PJK	CONFORMING TO CONSTRUCTION RECORDS
1	7/26/19	MT/EP2		UPDATED PER COMMENTS/ADDED COMM CABLES
2	10/23/19	MT/EP2		AS BUILT
3	7/1/19	EP2/MT	EP2/MT	

BLACK HILLS ENERGY

WEST RAPID CITY SUBSTATION

WIRING DIAGRAM
PANEL 8

DWG NO. WRC-E-238A REVISION 3

P:\04\233\00\DWG\RECORD\WRC\CAD\WRC-E-238B.DWG

69 kV LINES CT4 & LNG3 (PANEL 8) - REAR VIEW

LEFT SIDE SHEET

A

EB25

CB1-1	1DCP34	1	CKT-34 (R) → 2C#10 → DC8P
CB1-3	1DCN36	2	CKT-36 (BK) → 2C#10 → DC8P
CB3-1	2DCP34	3	CKT-34 (R) → 2C#10 → DC8B
CB3-3	2DCN36	4	CKT-36 (BK) → 2C#10 → DC8B
		5	
		6	
		7	
		8	
		9	
		10	
		11	
		12	

DC8P: DC PANEL 1, WRC-E-410
DC8B: DC PANEL 2, WRC-E-410

B

EB25

AA-B07	+C01	1	51-1 (R) → 12C#10 → 01-S1A
G2	C01	2	51-2 (BK) → 12C#10 → 01-S1A
AA-B04	GL01	3	51-3 (D) → 12C#10 → 01-S1A
G3,BC2	+TC1-01	4	51-4 (BU) → 12C#10 → 01-S1A
G4,BC4	T1-01	5	51-5 (Y) → 12C#10 → 01-S1A
	SP	6	→ 3 SP
	SP	7	→ 3 SP
	SP	8	→ 3 SP
IA2	LNG69P+	9	51-9 (D/BK) → 12C#10 → 01-S1A
IA4	52aP01	10	51-10 (BU/BK) → 12C#10 → 01-S1A
F3,CB2-2	LNG69B+	11	51-11 (Y/BK) → 12C#10 → 01-S1A
CA-A20	52aB01	12	51-12 (BR/BK) → 12C#10 → 01-S1A

01-S1A: TBR, WRC-E-301

C

EB25

BC6,G5	+TC2-01	1	52-1 (R) → 4C#10 → 01-S2A
BC8,G6	T2-01	2	52-2 (BK) → 4C#10 → 01-S2A
	SP	3	52-3 (D) → 4C#10 → 01-S2A
	SP	4	52-4 (BU) → 4C#10 → 01-S2A
BC14	+TC2-04	5	62-1 (R) → 4C#10 → 04-S2A
BC16	T2-04	6	62-2 (BK) → 4C#10 → 04-S2A
E11,CB4-2	SP	7	62-3 (D) → 4C#10 → 04-S2A
EA-A20	SP	8	62-4 (BU) → 4C#10 → 04-S2A
FC14,Q3	+TC2-07	9	72-1 (R) → 4C#10 → 07-S2A
FC16,Q4	T2-07	10	72-2 (BK) → 4C#10 → 07-S2A
	SP	11	72-3 (D) → 4C#10 → 07-S2A
	SP	12	72-4 (BU) → 4C#10 → 07-S2A

01-S2A: TBR, WRC-E-301
04-S2A: TBR, WRC-E-302
07-S2A: TBR, WRC-E-302

D

EB25

CA-B07	+C04	1	61-1 (R) → 12C#10 → 04-S1A
AA-B14	C04	2	61-6 (BK) → 12C#10 → 04-S1A
CA-B04	GL04	3	61-3 (D) → 12C#10 → 04-S1A
BC10	+TC1-04	4	61-4 (BU) → 12C#10 → 04-S1A
BC12	T1-04	5	61-5 (Y) → 12C#10 → 04-S1A
	SP	6	
E9	CT4P+	7	61-7 (R/BK) → 1 SP
GA-A17	52a2P04	8	61-8 (BK/R)
CB1-2,G7	LNG69P+	9	61-9 (D/BK)
AA-A22	52aP04	10	61-10 (BU/BK)
IB2	LNG69B+	11	61-11 (Y/BK)
IB4	52aB04	12	61-12 (BR/BK)

04-S1A: TBR, WRC-E-302

E

EB25

EA-B03	+C07	1	71-1 (R) → 12C#10 → 07-S1A
GA-A10	C07	2	71-6 (BK) → 12C#10 → 07-S1A
EA-B04	GL07	3	71-3 (D) → 12C#10 → 07-S1A
EA-B05,Q1	+TC1-07	4	71-4 (BU) → 12C#10 → 07-S1A
EA-B06,Q2	T1-07	5	71-5 (Y) → 12C#10 → 07-S1A
	SP	6	→ 3 SP
	SP	7	→ 3 SP
	SP	8	→ 3 SP
F5,D7	CT4P+	9	71-9 (D/BK) → 12C#10 → 07-S1A
GA-A19	52aP07	10	71-10 (BU/BK) → 12C#10 → 07-S1A
F7,C7	CT4B+	11	71-11 (Y/BK) → 12C#10 → 07-S1A
EA-A22	52aB07	12	71-12 (BR/BK) → 12C#10 → 07-S1A

07-S1A: TBR, WRC-E-302

F

EB25

G7,IA1	LNG69P+	1	11-1 (R) → 4C#10 → 18-S1A
AA-B17	89a18	2	11-2 (BK) → 4C#10 → 18-S1A
IB1,B11	LNG69P+	3	11-3 (D) → 4C#10 → 18-S1A
CA-B17	89b18	4	11-4 (BU) → 4C#10 → 18-S1A
E9,CB3-2	CT4P+	5	12-1 (R) → 4C#10 → 19-S1A
GA-A21	89a19	6	12-2 (BK) → 4C#10 → 19-S1A
Q5,E11	CT4DB+	7	12-3 (D) → 4C#10 → 19-S1A
EA-B19	89b19	8	12-4 (BU) → 4C#10 → 19-S1A
		9	
		10	
		11	
		12	

18-S1A: TBR, WRC-E-301
19-S1A: TBR, WRC-E-301

G

EB25

CA-B14	+C01	1	P10-M1 (R) → 12C#10 → P8P10A
B2	C01	2	P10-M2 (BK) → 12C#10 → P8P10A
B4	+TC1-01	3	P10-M3 (D) → 12C#10 → P8P10A
B5	T1-01	4	P10-M4 (BU) → 12C#10 → P8P10A
C1	+TC2-01	5	P10-M5 (Y) → 12C#10 → P8P10A
C2	T2-01	6	P10-M6 (BR) → 12C#10 → P8P10A
D9,F1	LNG69P+	7	P10-M7 (R/BK) → 12C#10 → P8P10A
AA-B21	86B2BF01	8	P10-M8 (D/BK) → 4 SP
		9	
		10	
		11	
		12	

P8P10A: PANEL 10, WRC-E-240B

H

EB25

FB-17	CT4	1	24-9 (R) → 2C#10 → 86T4-BFI
FB-19	BFI	2	24-10 (BK) → 2C#10 → 86T4-BFI
		3	
		4	
		5	
		6	
		7	
		8	
		9	
		10	
		11	
		12	

86T4-BFI: TBR, WRC-E-301

CB1

DC08A/15A — ITEM F010

1. A1,CB2-1
2. AA-Z29,D9
3. A2,CB2-3
4. AA-Z30

CB2

DC08B/15A — ITEM F010

1. CB1-1
2. CA-Z29,B11
3. CB1-3
4. CA-Z30

CB3

DC08C/15A — ITEM F010

1. A3,CB4-1
2. EA-A18,F5
3. A4,CB4-3
4. GA-Z26

CB4

DC08D/15A — ITEM F010

1. CB3-1
2. EA-Z29,C7
3. CB3-3
4. EA-Z30

RIGHT SIDE SHEET

FU81

6A — ITEM F015

1. N1
2. BA14
3. N2
4. BA16
5. N3
6. BA18

FU82

6A — ITEM F015

1. N5
2. DA14
3. N6
4. DA16
5. N7
6. DA18

FU83

6A — ITEM F014

1. N11
2. BB14

FU84

6A — ITEM F014

1. FU86-3
2. DB14

FU85

6A — ITEM F015

1. P1
2. HA14
3. P2
4. HA16
5. P3
6. HA18

FU86

6A — ITEM F015

1. P5
2. FA14
3. P6,FU84-1
4. FA16
5. P7
6. FA18

FU87

6A — ITEM F014

1. P11
2. FB14

J ✳

01-C1A: TBR, WRC-E-301 — 9C#10 (R) (BK) (D) (BU) (R/BK) (BR) (D/BK) (BU/BK); 1 SP

EB27

55-1	26C1	1	BA2~
55-2	26C2	2	BA6~
55-3	26C3	3	BA10~
55-4	26C0	4	BA12~
55-5	27C1	5	DA2~
55-6	27C2	6	DA6~
55-7	27C3	7	DA10~
55-8	27C0	8	DA12~
		9	
		10	
		11	
		12	

K ✳

04-C2A: TBR, WRC-E-302 — 9C#10 (R) (BK) (D) (BU) (R/BK) (BR) (D/BK) (BU/BK); 5 SP

EB27

66-1	32C1	1	DB2~
66-2	32C2	2	DB6~
66-3	32C3	3	DB10~
66-4	32C0	4	DB12~
66-5	33C1	5	BB2~
66-6	33C2	6	BB6~
66-7	33C3	7	BB10~
66-8	33C0	8	BB12~
		9	
		10	
		11	
		12	

L ✳

04-C1A: TBR, WRC-E-302 — 9C#10 (R/BK) (BR) (D/BK) (BU/BK); 5 SP

EB27

FA4~	30C1	1	M5~
FA8~	30C2	2	M6~
FA12~	30C3	3	M7~
L8~	30C0	4	M8~
65-5	31C1	5	FA2~
65-6	31C2	6	FA6~
65-7	31C3	7	FA10~
65-8	31C0	8	L4~
		9	
		10	
		11	
		12	

M ✳

07-C2A: TBR, WRC-E-302 — 9C#10 (R) (BK) (D) (BU); 5 SP

EB27

76-1	36C1	1	FB2~
76-2	36C2	2	FB6~
76-3	36C3	3	FB10~
76-4	36C0	4	M8~
FB4~	37C1	5	L1~,HA2~
FB8~	37C2	6	L2~,HA6~
FB12~	37C3	7	L3~,HA10~
M4~	37C0	8	L4~,HA12~
		9	
		10	
		11	
		12	

N

PT-7PA: TBR, WRC-E-302 — 9C#10 (R) (BK) (D) (BU) (R/BK) (BR) (D/BK) (BU/BK); 1 SP

PT-8PA: TBR, WRC-E-301 — 2C#10 (R) (BK)

EB25

64-1	P7X1	1	FU81-1
64-2	P7X2	2	FU81-3
64-3	P7X3	3	FU81-5
64-4	P7XN	4	BA20
64-5	P7Y1	5	FU82-1
64-6	P7Y2	6	FU82-3
64-7	P7Y3	7	FU82-5
64-8	P7YN	8	DA20
		9	
		10	
54-1	P8X2	11	FU83-1
54-2	P8XN	12	BB16

P

PT-6PA: TBR, WRC-E-302 — 9C#10 (R) (BK) (D) (BU) (R/BK) (BR) (D/BK) (BU/BK); 1 SP

PT-5PB: TBR, WRC-E-301 — 2C#10 (R) (BK)

EB25

74-1	P6X1	1	FU85-1
74-2	P6X2	2	FU85-3
74-3	P6X3	3	FU85-5
74-4	P6XN	4	HA20
74-5	P6Y1	5	FU86-1
74-6	P6Y2	6	FU86-3
74-7	P6Y3	7	FU86-5
74-8	P6YN	8	FA20
		9	
		10	
104-3	P5Y2	11	FU87-1
104-4	P5YN	12	FB16

Q

P4P8A: PANEL 4, WRC-E-234B — 12C#10 (R) (BK) (D) (BU) (Y) (BR); 6 SP

EB25

P4-G1	+TC1-07	1	E4,R1
P4-G2	T1-07	2	E5,R2
P4-G3	+TC2-07	3	C9,R3
P4-G4	T2-07	4	C10,R4
P4-G5	CT4DB+	5	F7
P4-G6	86BT1BF07	6	EA-B17
		7	
		8	
		9	
		10	
		11	
		12	

R

P5P8A: PANEL 5, WRC-E-235B — 12C#10 (R) (BK) (D) (BU); 8 SP

EB25

P5-E1	+TC1-07	1	Q1
P5-E2	T1-07	2	Q2
P5-E3	+TC2-07	3	Q3
P5-E4	T2-07	4	Q4
		5	
		6	
		7	
		8	
		9	
		10	
		11	
		12	

T

EB25

		1
		2
		3
		4
		5
		6
		7
		8
		9
		10
		11
		12

NOTES:

1. ALL WIRING TO BE #12 AWG, SIS EXCEPT AS NOTED.
2. ALL TERMINATIONS TO USE FORK LUGS EXCEPT CT CIRCUIT CONNECTIONS WILL HAVE INSULATED RING TONGUE TYPE LUGS. CT CIRCUITS NOTED BY '~'
3. DESTINATION TYPE WIRE MARKERS.

SYMBOLS LEGEND:

✳ INDICATES SHORTING TYPE TERMINAL BLOCK.

ENGINEERING
ROCK RAPIDS, IOWA
(712) 472-2531

EP2 JOB #10292
DES MOINES, IA
(515)262-8161
www.ep2.com

ELECTRICAL POWER PRODUCTS

NO.	DATE	DRAWN BY	APPROVED BY	REVISION DESCRIPTION
1	10/23/19	MT/EP2	PJK	AS BUILT
2	10-19	MEL	PJK	FOR CONSTRUCTION
3	06-20	KLV	PJK	CONFORMING TO CONSTRUCTION RECORDS

DRAWN BY: EP2/MT DATE: 7/1/19
APPROVED BY: EP2/MT DATE: 7/1/19

BLACK HILLS ENERGY

WEST RAPID CITY SUBSTATION
WIRING DIAGRAM
PANEL 8

DWG NO. WRC-E-238B REVISION 3

P:\04\233\00\DWG\RECORD\WRC\CAD\WRC-E-239A.DWG

69 kV LINES BF1 & BF2 (PANEL 9) - REAR VIEW

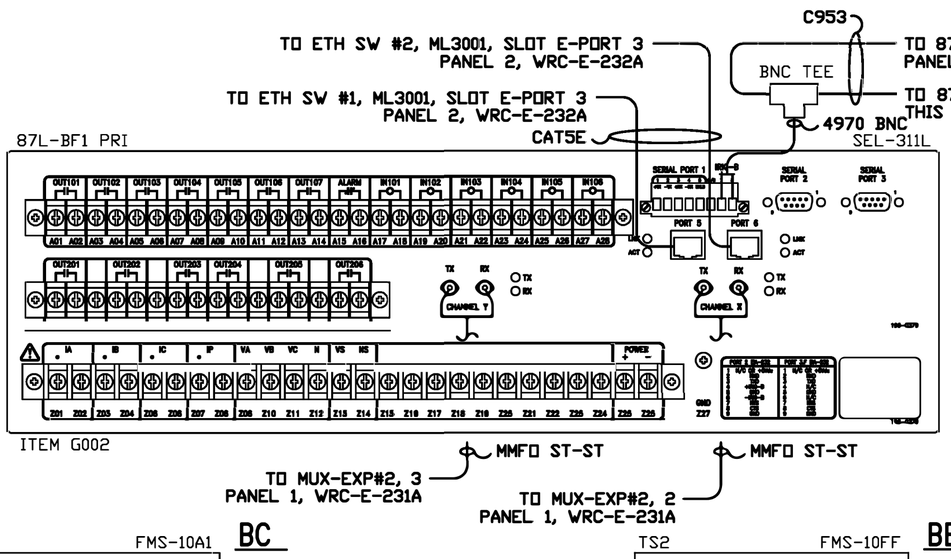

GND

GROUND BUS

1. AA-Z27
2. CA-Z31
3. FA-Z31
4. HA-Z27
5. A12
6. RC-G

AA

Z01. BA1~	A01. BC1	A15. CA-Z29	B01. BC9
Z02. BA3~	A02. BC3	A16. CA-B41	B02. BC11
Z03. BA5~	A03. BC5	A17. B10	B04. BC13
Z04. BA7~	A04. BC7	A18. AA-A20	B05. BC15
Z05. BA9~	A05.	A19. D10	B07.
Z06. BA11~	A06.	A20. AA-A18,BB20	B08.
Z07.	A07.	A21. F2	B09.
Z08.	A08.	A22. AA-Z26,AA-A24	B10.
Z09. BA13	A09. CA-B10	A23.	B12.
Z10. BA15	A10. E1	A24. AA-A22,AA-A26	B13.
Z11. BA17	A11. BC17	A25. CA-B31	B15.
Z12. BA19	A12. BC19	A26. AA-A24,BB20	B16.
Z13.	A13.	A27. BB17	
Z14.	A14.	A28. BB19	
Z25. CB1-2,BB18			
Z26. CB1-4,AA-A22			
Z27. GND1			

BC

TS3 FMS-10A1 — 293RG-330HI

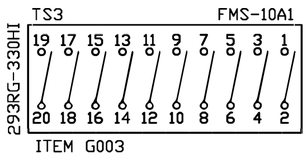

ITEM G003

1. AA-A01	11. AA-B02	
2. B4,DC2	12. D5,DC12	
3. AA-A02	13. AA-B04	
4. B5,DC4	14. C5,DC14	
5. AA-A03	15. AA-B05	
6. C1,DC6	16. C6,DC16	
7. AA-A04	17. AA-A11	
8. C2,DC8	18.	
9. AA-B01	19. AA-A12	
10. D4,DC10	20.	

BB

TS2 FMS-10FF

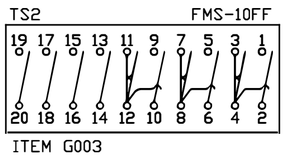

ITEM G003

1.	11.	
2.	12.	
3.	13.	
4.	14.	
5.	15.	
6.	16.	
7.	17. AA-A27	
8.	18. AA-Z25,CA-B30	
9.	19. AA-A28	
10.	20. AA-A26,AA-A20	

BA

TS1 FMS-10FF

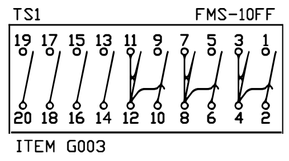

ITEM G003

1. AA-Z01~	11. AA-Z06~	
2. K5~	12. K8~,BA8~	
3. AA-Z02~	13. AA-Z09	
4. BA8~	14. FU91-2	
5. AA-Z03~	15. AA-Z10	
6. K6~	16. FU91-4	
7. AA-Z04~	17. AA-Z11	
8. BA12~,BA4~	18. FU91-6	
9. AA-Z05~	19. AA-Z12	
10. K7~	20. N4	

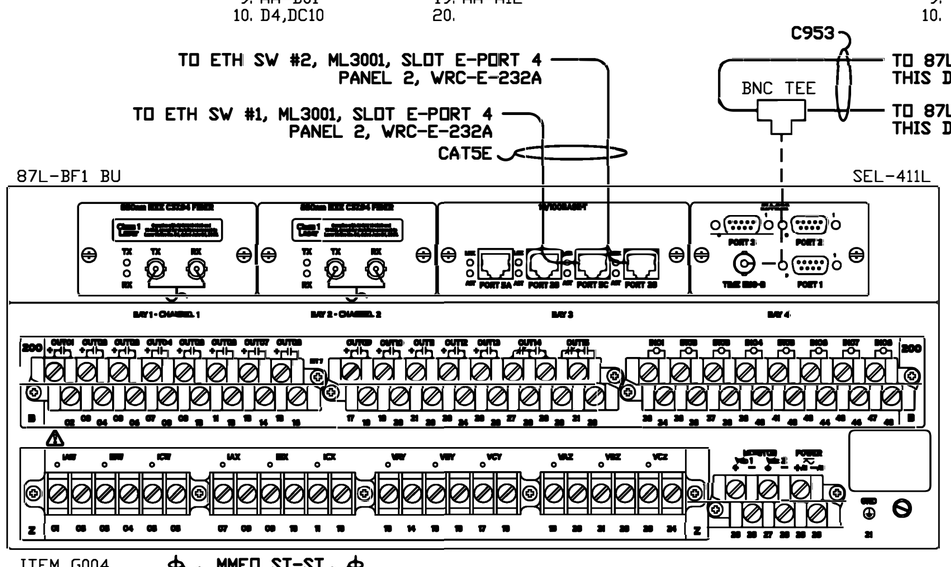

CA

Z01. DA1~	Z21. DB13	B09. CA-B08	B29. DC19
Z02. DA3~	Z22. DB15	B10. AA-A09	B30. BB18
Z03. DA5~	Z23.	B11. DC9	B31. AA-A25
Z04. DA7~	Z24.	B12. DC11	B32.
Z05. DA9~	Z25.	B13. DC13	B33. B12
Z06. DA11~	Z26.	B14. DC15	B34. CA-Z30,CA-B42
Z07. DB1~	Z27.	B15.	B35. D12
Z08. DB3~	Z28.	B16.	B36. CA-B48
Z09. DB5~	Z29. CB2-2,AA-A15	B17.	B37. CA-B01
Z10. DB7~	Z30. CB2-4,CA-B34	B18.	B38. CA-B02
Z11. DB9~	Z31. GND2	B19.	B39. CA-B03
Z12. DB11~	B01. DC1,CA-B37	B20.	B40. CA-B04
Z13. DA13	B02. DC3,CA-B38	B21.	B41. AA-A16
Z14. CA-Z16	B03. DC5,CA-B39	B22.	B42. CA-B34,CA-B44
Z15. DA15	B04. DC7,CA-B40	B23.	B43. E8
Z16. CA-Z14,CA-Z18	B05.	B24.	B44. CA-B42,CA-B48
Z17. DA17	B06.	B25.	B45.
Z18. DA19,CA-Z16	B07. B1,EB01	B26.	B46.
Z19.	B08. CA-B09,EB02	B27.	B47. F4
Z20.		B28. DC17	B48. CA-B44,CA-B36

DC

TS6 FMS-10A1 — 293RG-330HI

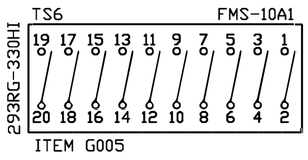

ITEM G005

1. CA-B01	11. CA-B12	
2. BC2,EB05	12. BC12,EA06	
3. CA-B02	13. CA-B13	
4. BC4,EB06	14. BC14,GC6	
5. CA-B03	15. CA-B14	
6. BC6	16. BC16,GC8	
7. CA-B04	17. CA-B28	
8. BC8	18.	
9. CA-B11	19. CA-B29	
10. BC10,EA05	20.	

DB

TS5 FMS-10FF

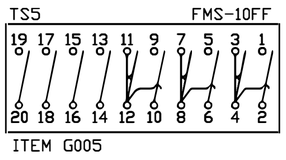

ITEM G005

1. CA-Z07~	11. CA-Z12~	
2. K1~	12. K4~,DB8~	
3. CA-Z08~	13. CA-Z21	
4. DB8~	14. FU93-2	
5. CA-Z09~	15. CA-Z22	
6. K2~	16. N12	
7. CA-Z10~	17.	
8. DB12~,DB4~	18.	
9. CA-Z11~	19.	
10. K3~	20.	

DA

TS4 FMS-10FF

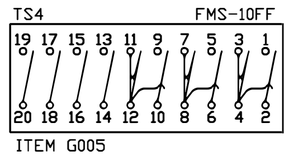

ITEM G005

1. CA-Z01~	11. CA-Z06~	
2. J5~	12. J8~,DA8~	
3. CA-Z02~	13. CA-Z13	
4. DA8~	14. FU92-2	
5. CA-Z03~	15. CA-Z15	
6. J6~	16. FU92-4	
7. CA-Z04~	17. CA-Z17	
8. DA12~,DA4~	18. FU92-6	
9. CA-Z05~	19. CA-Z18	
10. J7~	20. N8,GB16	

EB

101-6WR10 SEL-9510

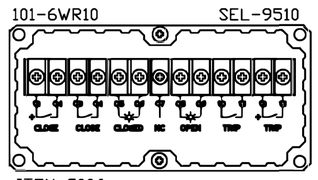

ITEM G006

01. CA-B07,EB08	07.	
02. CA-B08	08. EB01	
03.	09. B3	
04.	10.	
05. DC2,EB12	11.	
06. DC4,EB13	12. EB05	
	13. EB06	

EA

101-6WR13 SEL-9510

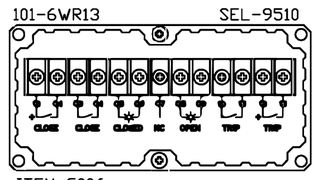

ITEM G006

01. EA08,FA-B07	07.	
02. FA-B08	08. D1,EA01	
03.	09. D3	
04.	10.	
05. DC10,EA12	11.	
06. DC12,EA13	12. EA05,GC2	
	13. EA06,GC4	

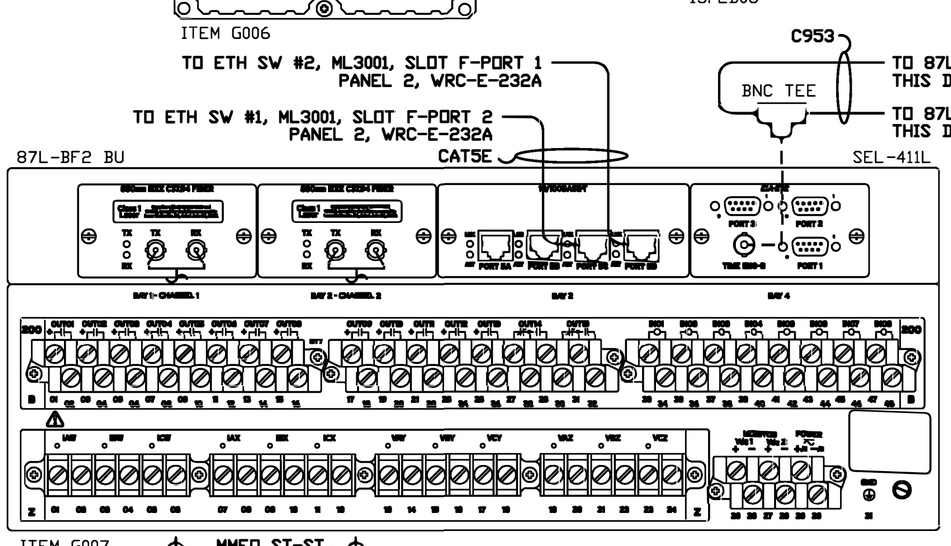

FA

Z01. GA1~	Z21. GB13	B09. FA-B08	B29. GC19
Z02. GA3~	Z22. GB15	B10. HA-A09	B30. CB3-2,HA-Z25
Z03. GA5~	Z23.	B11. GC9	B31. HA-A25
Z04. GA7~	Z24.	B12. GC11	B32.
Z05. GA9~	Z25.	B13. GC13	B33. C8
Z06. GA11~	Z26.	B14. GC15	B34. FA-Z30,FA-B42
Z07. GB1~	Z27.	B15.	B35. F12
Z08. GB3~	Z28.	B16.	B36. FA-B44
Z09. GB5~	Z29. CB4-2,HA-A15	B17. Q1	B37. FA-B01
Z10. GB7~	Z30. CB4-4,FA-B34	B18. Q2	B38. FA-B02
Z11. GB9~	Z31. GND3	B19.	B39. FA-B03
Z12. GB11~	B01. GC1,FA-B37	B20.	B40. FA-B04
Z13. GA13	B02. GC3,FA-B38	B21.	B41. HA-A16
Z14. FA-Z16	B03. GC5,FA-B39	B22.	B42. FA-B34,FA-B44
Z15. GA15	B04. GC7,FA-B40	B23.	B43. F8
Z16. FA-Z14,FA-Z18	B05.	B24.	B44. FA-B48,FA-B36
Z17. GA17	B06.	B25.	B45.
Z18. GA19,FA-Z16	B07. EA01	B26.	B46.
Z19.	B08. FA-B09,EA02	B27.	B47. E10
Z20.		B28. GC17	B48. FA-B42,FA-B44

GC

TS9 FMS-10A1 — 293RG-330HI

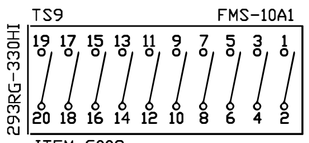

ITEM G008

1. FA-B01	11. FA-B12	
2. EA12,JC2	12. Q4,JC12	
3. FA-B02	13. FA-B13	
4. EA13,JC4	14. Q5,JC14	
5. FA-B03	15. FA-B14	
6. DC14,JC6	16. Q6,JC16	
7. FA-B04	17. FA-B28	
8. DC16,JC8	18.	
9. FA-B11	19. FA-B29	
10. Q3,JC10	20.	

GB

TS8 FMS-10FF

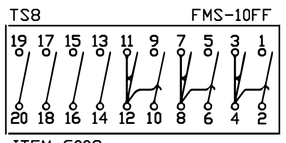

ITEM G008

1. FA-Z07~	11. FA-Z12~	
2. M1~	12. M4~,GB8~	
3. FA-Z08~	13. FA-Z21	
4. GB8~	14. FU96-2	
5. FA-Z09~	15. FA-Z22	
6. M2~	16. DA20	
7. FA-Z10~	17.	
8. GB12~,GB4~	18.	
9. FA-Z11~	19.	
10. M3~	20.	

GA

TS7 FMS-10FF

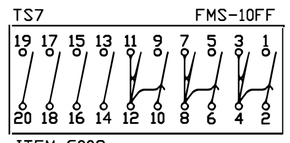

ITEM G008

1. FA-Z01~	11. FA-Z06~	
2. L5~	12. L8~,GA8~	
3. FA-Z02~	13. FA-Z13	
4. GA8~	14. FU95-2	
5. FA-Z03~	15. FA-Z15	
6. L6~	16. FU95-4	
7. FA-Z04~	17. FA-Z17	
8. GA12~,GA4~	18. FU95-6	
9. FA-Z05~	19. FA-Z18	
10. L7~	20. P8	

HA

Z01. JA1~	A01. JC1	A15. FA-Z29	B01. JC9
Z02. JA3~	A02. JC3	A16. FA-B41	B02. JC11
Z03. JA5~	A03. JC5	A17.	B04. JC13
Z04. JA7~	A04. JC7	A18. HA-A20	B05. JC15
Z05. JA9~	A05.	A19.	B07.
Z06. JA11~	A06.	A20. JB20,HA-A18	B08.
Z07.	A07.	A21. F6	B09.
Z08.	A08.	A22. HA-Z26,HA-A24	B10.
Z09. JA13	A09. FA-B10	A23.	B12.
Z10. JA15	A10. D2	A24. HA-A22,HA-A26	B13.
Z11. JA17	A11. JC17	A25. FA-B31	B15.
Z12. JA19	A12. JC19	A26. HA-A24,JB20	B16.
Z13.	A13.	A27. JB17	
Z14.	A14.	A28. JB19	
Z25. FA-B30,JB18			
Z26. CB3-4,HA-A22			
Z27. GND4			

JC

TS12 FMS-10A1 — 293RG-330HI

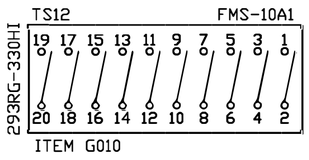

ITEM G010

1. HA-A01	11. HA-B02	
2. GC2	12. GC12	
3. HA-A02	13. HA-B04	
4. GC4	14. GC14	
5. HA-A03	15. HA-B05	
6. GC6	16. GC16	
7. HA-A04	17. HA-A11	
8. GC8	18.	
9. HA-B01	19. HA-A12	
10. GC10	20.	

JB

TS11 FMS-10FF

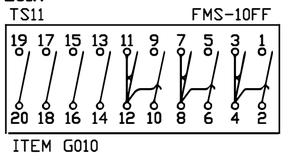

ITEM G010

1.	11.	
2.	12.	
3.	13.	
4.	14.	
5.	15.	
6.	16.	
7.	17. HA-A27	
8.	18. HA-Z25	
9.	19. HA-A28	
10.	20. HA-A26,HA-A20	

JA

TS10 FMS-10FF

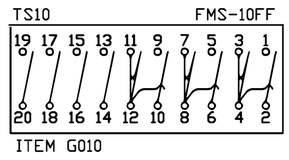

ITEM G010

1. HA-Z01~	11. HA-Z06~	
2. M5~	12. M8~,JA8~	
3. HA-Z02~	13. HA-Z09	
4. JA8~	14. FU94-2	
5. HA-Z03~	15. HA-Z10	
6. M6~	16. FU94-4	
7. HA-Z04~	17. HA-Z11	
8. JA12~,JA4~	18. FU94-6	
9. HA-Z05~	19. HA-Z12	
10. M7~	20. P4	

NOTES:

1. ALL WIRING TO BE #12 AWG, SIS EXCEPT AS NOTED.
2. ALL TERMINATIONS TO USE FORK LUGS EXCEPT CT CIRCUIT CONNECTIONS WILL HAVE INSULATED RING TONGUE TYPE LUGS. CT CIRCUITS NOTED BY '~'
3. DESTINATION TYPE WIRE MARKERS.

NA

RECPT10 TRIPPLITE RS-0615-F

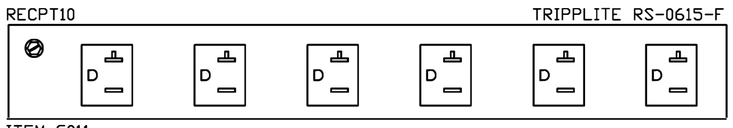

ITEM G011

L. A10
N. A11
G. A12

ENGINEERING
DGR
ROCK RAPIDS, IOWA
(712) 472-2531

ELECTRICAL POWER PRODUCTS
EP2 JOB #10292
DES MOINES, IA
(515)262-8161
www.ep2.com

NO.	DRAWN BY	DATE	REVISION DESCRIPTION
1	MT/EP2	7/26/19	UPDATED PER COMMENTS/ADDED COMM CABLES
2	MT/EP2	10/23/19	AS BUILT
3	KLV	06-20	CONFORMING TO CONSTRUCTION RECORDS

APPROVED BY: PJK

BLACK HILLS ENERGY

WEST RAPID CITY SUBSTATION

WIRING DIAGRAM
PANEL 9

DRAWN BY: EP2/MT DATE: 7/1/19
APPROVED BY: EP2/MT DATE: 7/1/19

DWG NO. WRC-E-239A REVISION 3

DGR ENGINEERING
ROCK RAPIDS, IOWA
(712) 472-2531

P:\04\233\00\DWG\RECORD\WRC\CAD\WRC-E-239B.DWG

69 kV LINES BF1 & BF2 (PANEL 9) - REAR VIEW

LEFT SIDE SHEET

A

EB25

CB1-1	1DCP37	1	CKT-37 (R)	2C#10	DC9P
CB1-3	1DCN39	2	CKT-39 (BK)		DC PANEL 1 WRC-E-410
CB3-1	2DCP37	3	CKT-37 (R)	2C#10	DC9B
CB3-3	2DCN39	4	CKT-39 (BK)		DC PANEL 2 WRC-E-410
		5			
		6			
		7			
		8			
		9			
NA-L,RC1	AC2-38	10	CKT-38 (BK)	2C#10	ACP2-C38
NA-N,RC2	N	11	N (W)		AC PANEL 2 WRC-E-400
NA-G,GND5	ACG	12			

B

EB25

CA-B07	+C10	1	81-1 (R)	12C#1 0	10-S1A
E2	C10	2	81-2 (BK)		TBR WRC-E-302
EB09	GL10	3	81-3 (D)		
BC2,E3	+TC1-10	4	81-4 (BU)		
BC4,E4	T1-10	5	81-5 (Y)		
	SP	6	81-6		
	SP	7	81-7		3 SP
	SP	8	81-8		
D9	BF1P+	9	81-9 (D/BK)		
AA-A17	52aP10	10	81-10 (BU/BK)		
D11,CB2-2	BF1B+	11	81-11 (Y/BK)		
CA-B33	52aB10	12	81-12 (BR/BK)		

C

EB25

BC6,E5	+TC2-10	1	82-1 (R)	4C#1 0	10-S2A
BC8,E6	T2-10	2	82-2 (BK)		TBR WRC-E-302
	SP	3	82-3 (D)		
	SP	4	82-4 (BU)	4C#1 0	13-S2A
BC14	+TC2-13	5	92-1 (R)		TBR WRC-E-302
BC16	T2-13	6	92-2 (BK)		
E9,CB4-2	BF2B+	7	92-3 (D)		
FA-B33	52a2B13	8	92-4 (BU)		
		9			
		10			
		11			
		12			

D

EB25

EA08	+C13	1	91-1 (R)	12C#1 0	13-S1A
HA-A10	C13	2	91-2 (BK)		TBR WRC-E-302
EA09	GL13	3	91-3 (D)		
BC10	+TC1-13	4	91-4 (BU)		
BC12	T1-13	5	91-5 (Y)		
	SP	6	91-6		
F9	BF2P+	7	91-7 (R/BK)		1 SP
HA-A17	52a2P13	8	91-8 (BK/R)		
B9,F1	BF1P+	9	91-9 (D/BK)		
AA-A19	52aP13	10	91-10 (BU/BK)		
B11,E7	BF1B+	11	91-11 (Y/BK)		
CA-B35	52aB13	12	91-12 (BR/BK)		

E

EB25

AA-A10	+C10	1	P10-N1 (R)	12C#1 0	P9P10A
B2	C10	2	P10-N2 (BK)		PANEL 10 WRC-E-240B
B4	+TC1-10	3	P10-N3 (D)		
B5	T1-10	4	P10-N4 (BU)		
C1	+TC2-10	5	P10-N5 (Y)		
C2	T2-10	6	P10-N6 (BR)		
F3,D11	BF1P+	7	P10-N7 (R/BK)		
CA-B43	86B2BF10	8	P10-N8 (D/BK)		
F7,C7	BF2B+	9	P10-N9 (BU/BK)		
FA-B47	87B2BAL	10	P10-N10 (Y/BK)		2 SP
		11			
		12			

F

EB25

D9,CB1-2	BF1P+	1	13-1 (R)	4C#10	20-S1A
AA-A21	89a20	2	13-2 (BK)		TBR WRC-E-301
E7	BF1P+	3	13-3 (D)	4C#10	21-S1A
CA-B47	89b20	4	13-4 (BU)		TBR WRC-E-301
F9,CB3-2	BF2P+	5	14-1 (R)	4C#10	16-S1B
HA-A21	89aP21	6	14-2 (BK)		TBR WRC-E-302
F11,E9	BF2B+	7	14-3 (D)		
FA-B43	89aB21	8	14-4 (BU)		
D7,F5	BF2P+	9	101-9 (R)		
HA-A19	52aP16	10	101-10 (BK)		
F7	BF2B+	11	101-11 (D)		
FA-B35	52aB16	12	101-12 (BU)		

G

EB25

	1
	2
	3
	4
	5
	6
	7
	8
	9
	10
	11
	12

H

EB25

	1
	2
	3
	4
	5
	6
	7
	8
	9
	10
	11
	12

CB1

DC09A/15A

ITEM G012

1. A1,CB2-1
2. AA-Z25,F1
3. A2,CB2-3
4. AA-Z26

CB2

DC09B/15A

ITEM G012

1. CB1-1
2. CA-Z29,B11
3. CB1-3
4. CA-Z30

CB3

DC09C/15A

ITEM G012

1. A3,CB4-1
2. FA-B30,F5
3. A4,CB4-3
4. HA-Z26

CB4

DC09D/15A

ITEM G012

1. CB3-1
2. FA-Z29,C7
3. CB3-3
4. FA-Z30

RIGHT SIDE SHEET

FU91

6A

ITEM G017

1. N1
2. BA14
3. N2
4. BA16
5. N3
6. BA18

FU92

6A

ITEM G017

1. N5
2. DA14
3. N6,FU96-1
4. DA16
5. N7
6. DA18

FU93

6A

ITEM G016

1. N11
2. DB14

FU94

6A

ITEM G017

1. P1
2. JA14
3. P2
4. JA16
5. P3
6. JA18

FU95

6A

ITEM G017

1. P5
2. GA14
3. P6
4. GA16
5. P7
6. GA18

FU96

6A

ITEM G016

1. FU92-3
2. GB14

J ✳

EB27

10-C1A	85-1	38C1	1	9C#1 0 (R)	K5~
TBR WRC-E-302	85-2	38C2	2	(BK)	K6~
	85-3	38C3	3	(D)	K7~
	85-4	38C0	4	(BU)	K8~
	85-5	39C1	5	(R/BK)	DA2~
	85-6	39C2	6	(BR)	DA6~
	85-7	39C3	7	(D/BK)	DA10~
1 SP	85-8	39C0	8	(BU/BK)	DA12~
			9		
			10		
			11		
			12		

K ✳

EB27

13-C2A	96-1	44C1	1	9C#1 0 (R)	DB2~
TBR WRC-E-302	96-2	44C2	2	(BK)	DB6~
	96-3	44C3	3	(D)	DB10~
	96-4	44C0	4	(BU)	DB12~
	96-5	45C1	5	(R/BK)	J1~,BA2~
	96-6	45C2	6	(BR)	J2~,BA6~
	96-7	45C3	7	(D/BK)	J3~,BA10~
1 SP	96-8	45C0	8	(BU/BK)	J4~,BA12~
			9		
			10		
			11		
			12		

L ✳

EB27

13-C1A	95-1	42C1	1	9C#1 0 (R)	M5~
TBR WRC-E-302	95-2	42C2	2	(BK)	M6~
	95-3	42C3	3	(D)	M7~
	95-4	42C0	4	(BU)	M8~
	95-5	43C1	5	(R/BK)	GA2~
	95-6	43C2	6	(BR)	GA6~
	95-7	43C3	7	(D/BK)	GA10~
1 SP	95-8	43C0	8	(BU/BK)	GA12~
			9		
			10		
			11		
			12		

M ✳

EB27

16-C2A	106-1	48C1	1	9C#1 0 (R)	GB2~
TBR WRC-E-302	106-2	48C2	2	(BK)	GB6~
	106-3	48C3	3	(D)	GB10~
	106-4	48C0	4	(BU)	GB12~
	106-5	49C1	5	(R/BK)	L1~,JA2~
	106-6	49C2	6	(BR)	L2~,JA6~
	106-7	49C3	7	(D/BK)	L3~,JA10~
1 SP	106-8	49C0	8	(BU/BK)	L4~,JA12~
			9		
			10		
			11		
			12		

RC

RECPT

ITEM G00?

1. A10
2. A11
G. GND6

N

EB25

PT-10PA	84-1	P10X1	1	9C#1 0 (R)	FU91-1
TBR WRC-E-302	84-2	P10X2	2	(BK)	FU91-3
	84-3	P10X3	3	(D)	FU91-5
	84-4	P10XN	4	(BU)	BA20
	84-5	P10Y1	5	(R/BK)	FU92-1
	84-6	P10Y2	6	(BR)	FU92-3
	84-7	P10Y3	7	(D/BK)	FU92-5
1 SP	84-8	P10YN	8	(BU/BK)	DA20
			9		
			10		
PT-8PB	54-3	P8Y2	11	2C#1 0 (R)	FU93-1
TBR WRC-E-301	54-4	P8YN	12	(BK)	DB16

P

EB25

PT-9PA	94-1	P9X1	1	9C#10 (R)	FU94-1
TBR WRC-E-302	94-2	P9X2	2	(BK)	FU94-3
	94-3	P9X3	3	(D)	FU94-5
	94-4	P9XN	4	(BU)	JA20
	94-5	P9Y1	5	(R/BK)	FU95-1
	94-6	P9Y2	6	(BR)	FU95-3
	94-7	P9Y3	7	(D/BK)	FU95-5
1 SP	94-8	P9YN	8	(BU/BK)	GA20
			9		
			10		
			11		
			12		

Q

EB25

P5P9A	P5-F1	+C16	1	12C#1 0 (R)	FA-B17
PANEL 5 WRC-E-235B	P5-F2	C16	2	(BK)	FA-B18
	P5-F3	+TC1-16	3	(D)	GC10
	P5-F4	T1-16	4	(BU)	GC12
	P5-F5	+TC2-16	5	(Y)	GC14
6 SP	P5-F6	T2-16	6	(BR)	GC16
			7		
			8		
			9		
			10		
			11		
			12		

R

EB25

	1
	2
	3
	4
	5
	6
	7
	8
	9
	10
	11
	12

NOTES:

1. ALL WIRING TO BE #12 AWG, SIS EXCEPT AS NOTED.
2. ALL TERMINATIONS TO USE FORK LUGS EXCEPT CT CIRCUIT CONNECTIONS WILL HAVE INSULATED RING TONGUE TYPE LUGS. CT CIRCUITS NOTED BY '~'
3. DESTINATION TYPE WIRE MARKERS.

SYMBOLS LEGEND:

✳ INDICATES SHORTING TYPE TERMINAL BLOCK.

ELECTRICAL POWER PRODUCTS

EP2 JOB #10292

EP2 DES MOINES, IA (515)262-8161 www.ep2.com

NO.	DATE	DRAWN BY	APPROVED BY	REVISION DESCRIPTION
1	10/23/19	MT/EP2	PDK	AS BUILT
2	10-19	MEL	PDK	FOR CONSTRUCTION
3	06-20	KLV	PDK	CONFORMING TO CONSTRUCTION RECORDS

DRAWN BY EP2/MT DATE 7/1/19
APPROVED BY EP2/MT DATE 7/1/19

BLACK HILLS ENERGY

WEST RAPID CITY SUBSTATION
WIRING DIAGRAM
PANEL 9

DWG NO. WRC-E-239B REVISION 3

P:\04\233\00\DWG\RECORD\WRC\CAD\WRC-E-240A.DWG

69 kV BUS 2 (PANEL 10) - REAR VIEW

DGR ENGINEERING
ROCK RAPIDS, IOWA
(712) 472-2531

GROUND BUS

GND

1. AA217
2. EA217
3.
4.

87B2 PRI — SEL-587Z

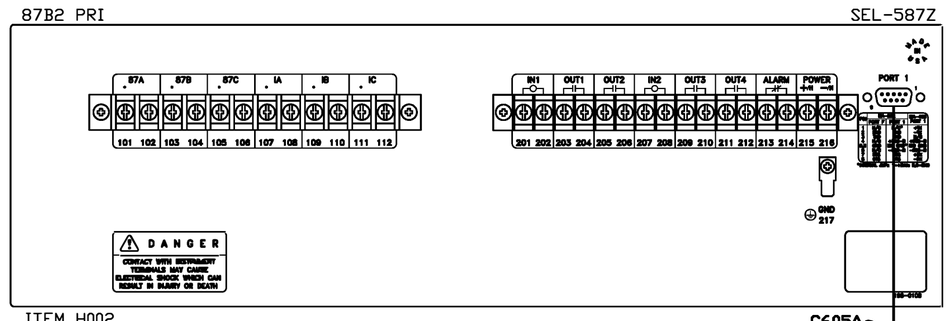

ITEM H002

C605A
TO RTU, SEL-3555, PCI2-4
PANEL 2, WRC-E-232A

AA

101. BA1~
102. BA3~
103. BA5~
104. BA7~
105. BA9~
106. BA11~
107.
108.
109.
110.
111.
112.

201. CA98
202. AA208
203. BA13
204. BA15
205.
206.
207. CB22
208. AA216,AA202
209.
210.
211. BA17
212. BA19
213. CB3-2,CB21
214. EA201
215. CB1-2,CA92
216. CB1-4,AA208
217. GND1

TS3 — FMS-10A1

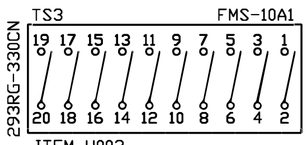

ITEM H003

BC

1. CA64
2. M7
3. CA66
4. M8
5. CA72
6. N7
7. CA78
8. N8
9.
10.

11.
12.
13.
14.
15.
16.
17.
18.
19.
20.

TS2 — FMS-10A1

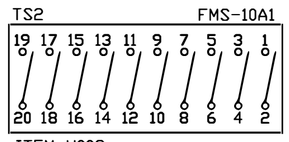

ITEM H003

BB

1. CA32
2. M3
3. CA38
4. M4
5. CA12
6. M5
7. CA18
8. M6
9. CA34
10. N3

11. CA36
12. N4
13. CA14
14. N5
15. CA16
16. N6
17.
18.
19.
20.

TS1 — FMS-10FF

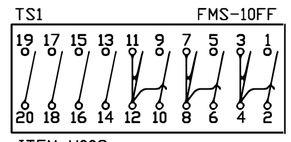

ITEM H003

BA

1. AA101~
2. K5~,CA52~
3. AA102~
4. BA8~,CA54~
5. AA103~
6. K6~,CA56~
7. AA104~
8. BA12~,BA4~
9. AA105~
10. K7~,CA62~

11. AA106~
12. K8~,BA8~
13. AA203
14. CB13
15. AA204
16. CA84,FA16
17. AA211
18.
19. AA212
20.

87B2PC□ — 24PA204NJ

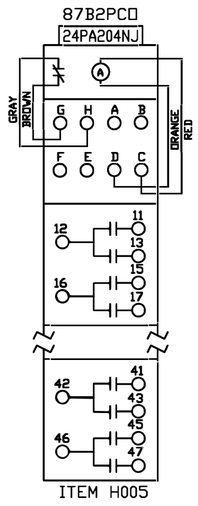

ITEM H005

CB

C. CB42
D. CA-B
G.
H.
11.
12. CB41,DB12
13. BA14
15.
16.
17.
21. CA92
22. AA207
23.
25. CA52~
26. CA68~,CB32~
27.
31. CA56~
32. CB26~,CB36~
33.
35. CA62~
36. CB32~
37.
41. CA-TB4,CB12
42. CB-C
43.
45. P5
46. P6
47.

86B2 — 78PB10D

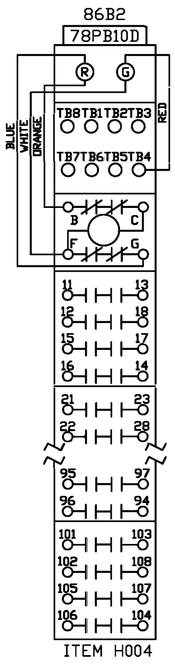

ITEM H004

CA

B. CB-D,CB2-4
G. CA84
TB4. CA86,CB41
11. M1
12. BB5
13. M2
14. BB13
15. N1
16. BB15
17. N2
18. BB7
21.
22.
23.
24.
25.
26.
27.
28.
31.
32. BB1
33.
34. BB9
35.
36. BB11
37.
38. BB3
41.
42.
43.
44.
45.
46.
47.
48.

51.
52. BA2~,CB25~
53.
54. BA4~,CA58~
55.
56. BA6~,CB31~
57.
58. CA54~,CA68~
61.
62. BA10~,CB35~
63.
64. BC1
65.
66. BC3
67.
68. CA58~,CB26~
71.
72. BC5
73.
74.
75.
76.
77.
78. BC7
81.
82.
83.
84. CA-G,BA16
85.
86. CB2-2,CA-TB4
87.
88. P4

91.
92. AA215,CB21
93.
94. FA4~,CA104~
95.
96. FA2~,DB25~
97.
98. AA201
101.
102. FA6~,DB31~
103.
104. CA94~,CA108~
105.
106. FA10~,DB35~
107.
108. DB26~,CA104~

87B2BC□ — 24PA204NJ

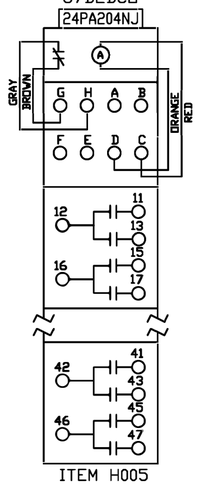

ITEM H005

DB

C. DB42
D. CB3-4,EA216
G.
H.
11.
12. CB12
13. FA14
15.
16.
17.
21. CB3-2,DB41
22. EA207
23.
25. CA96~
26. CA108~,DB32~
27.
31. CA102~
32. DB26~,DB36~
33.
35. CA106~
36. DB32~
37.
41. DB21,EA215
42. DB-C
43.
45. P7
46. P8
47.

101-6WR16 — SEL-9510

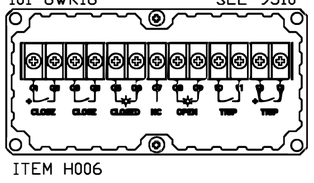

ITEM H006

DA

01. DA08
02. L2
03.
04.
05. L4,DA12
06. L5,DA13

07.
08. L1,DA01
09. L3
10.
11.
12. DA05
13. DA06

87B2 BU — SEL-587Z

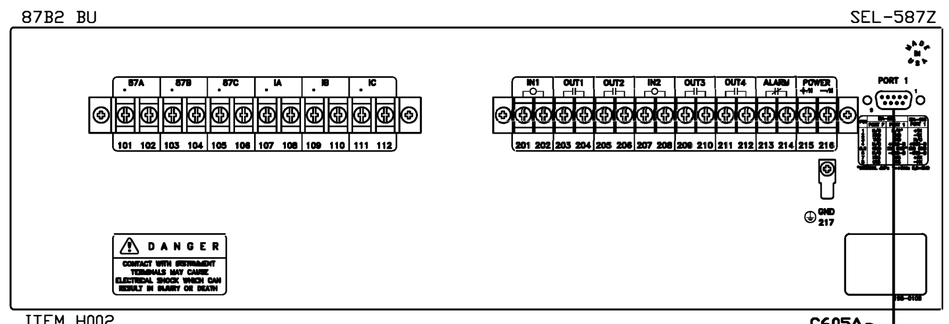

ITEM H002

C605A
TO RTU, SEL-3555, PCI2-5
PANEL 2, WRC-E-232A

EA

101. FA1~
102. FA3~
103. FA5~
104. FA7~
105. FA9~
106. FA11~
107.
108.
109.
110.
111.
112.

201.
202. EA208
203. FA13
204. FA15
205.
206.
207. DB22
208. EA216,EA202
209.
210.
211. FA17
212. FA19
213. N9
214. N10
215. DB41
216. DB-D,EA208
217. GND2

TS6 — FMS-10A1

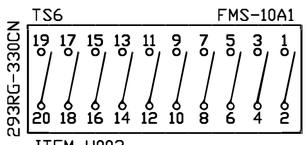

ITEM H003

FC

1.
2.
3.
4.
5.
6.
7.
8.
9.
10.

11.
12.
13.
14.
15.
16.
17.
18.
19.
20.

TS5 — FMS-10A1

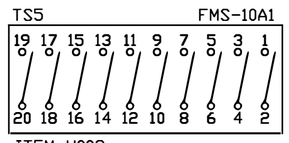

ITEM H003

FB

1.
2.
3.
4.
5.
6.
7.
8.
9.
10.

11.
12.
13.
14.
15.
16.
17.
18.
19.
20.

TS4 — FMS-10FF

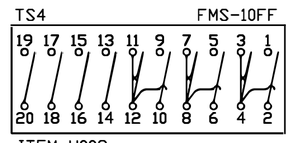

ITEM H003

FA

1. EA101~
2. K1~,CA96~
3. EA102~
4. FA8~,CA94~
5. EA103~
6. K2~,CA102~
7. EA104~
8. FA12~,FA4~
9. EA105~
10. K3~,CA106~

11. EA106~
12. K4~,FA8~
13. EA203
14. DB13
15. EA204
16. BA16
17. EA211
18.
19. EA212
20.

SHELF

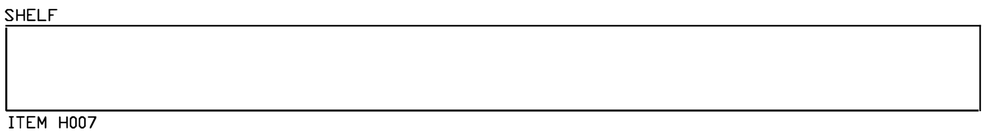

ITEM H007

GA

NOTES:

1. ALL WIRING TO BE #12 AWG, SIS EXCEPT AS NOTED.
2. ALL TERMINATIONS TO USE FORK LUGS EXCEPT CT CIRCUIT CONNECTIONS WILL HAVE INSULATED RING TONGUE TYPE LUGS. CT CIRCUITS NOTED BY '~'
3. DESTINATION TYPE WIRE MARKERS.

ELECTRICAL POWER PRODUCTS

EP2 JOB #10292
DES MOINES, IA
(515)262-8161
www.ep2.com

NO.	DATE	DRAWN BY	APPROVED BY	REVISION DESCRIPTION
1	7/26/19	MT/EP2		ADDED COMM CABLES
2	10/23/19	MT/EP2		AS BUILT
3	06-20	KLV	PDK	CONFORMING TO CONSTRUCTION RECORDS

BLACK HILLS ENERGY

WEST RAPID CITY SUBSTATION

WIRING DIAGRAM
PANEL 10

DRAWN BY EP2/MT DATE 7/1/19
APPROVED BY EP2/MT DATE 7/1/19

DWG NO. WRC-E-240A REVISION 3

ROCK RAPIDS, IOWA
(712) 472-2531

P:\04\233\00\DWG\RECORD\WRC\CAD\WRC-E-240B.DWG

69 kV BUS 2 (PANEL 10) - REAR VIEW

LEFT SIDE SHEET

A

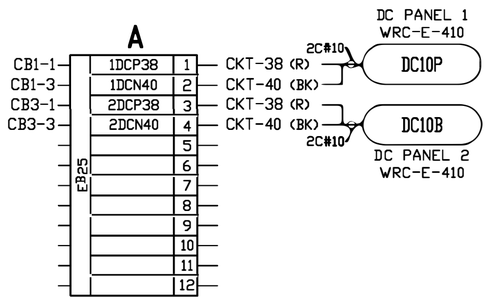

B

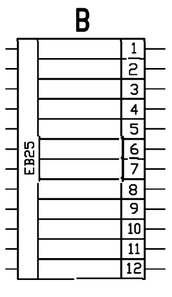

C

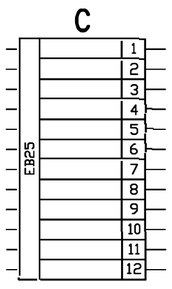

D

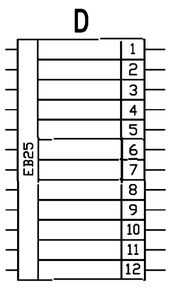

E

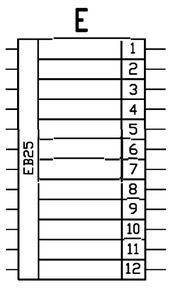

F

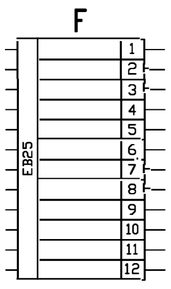

G

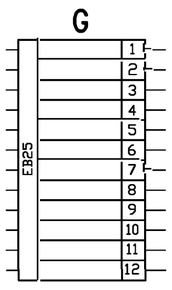

H

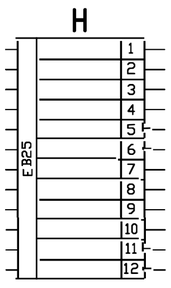

CB1

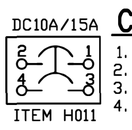

1. A1,CB2-1
2. AA215
3. A2,CB2-3
4. AA216

CB2

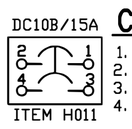

1. CB1-1
2. CA86
3. CB1-3
4. CA-B

CB3

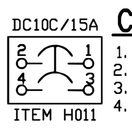

1. A3
2. DB21
3. A4
4. DB-D

RIGHT SIDE SHEET

J

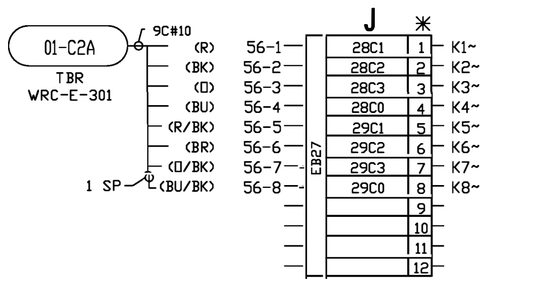

K

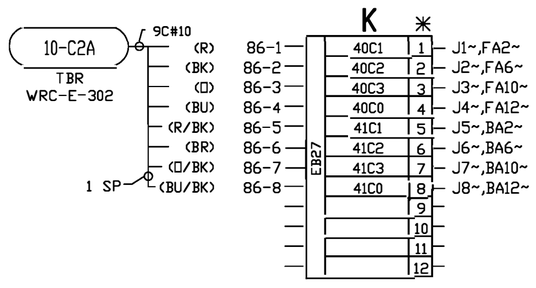

L

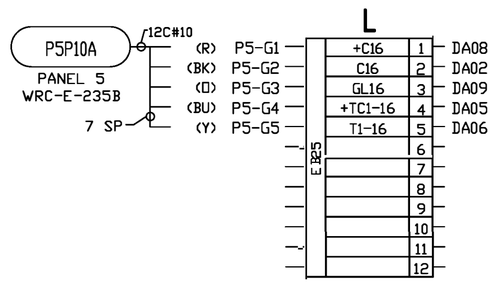

M

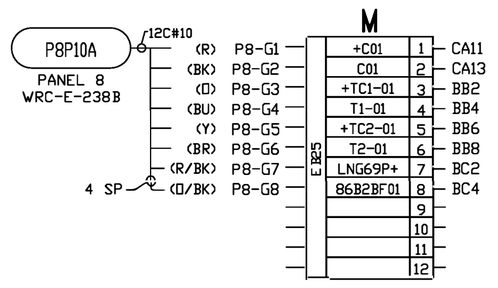

N

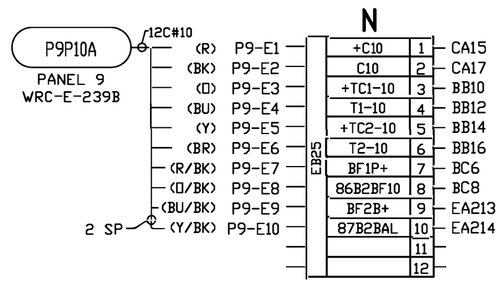

P

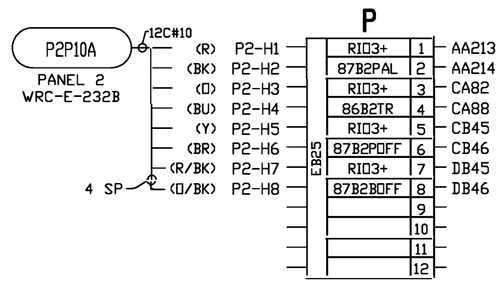

Q

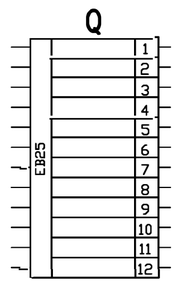

R

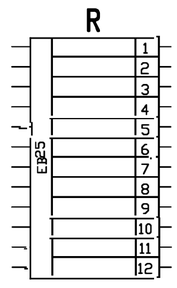

T

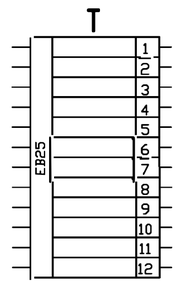

NOTES:

1. ALL WIRING TO BE #12 AWG, SIS EXCEPT AS NOTED.
2. ALL TERMINATIONS TO USE FORK LUGS EXCEPT CT CIRCUIT CONNECTIONS WILL HAVE INSULATED RING TONGUE TYPE LUGS. CT CIRCUITS NOTED BY '~'
3. DESTINATION TYPE WIRE MARKERS.

SYMBOLS LEGEND:

✳ INDICATES SHORTING TYPE TERMINAL BLOCK.

ELECTRICAL POWER PRODUCTS

DES MOINES, IA
(515)262-8161
www.ep2.com

EP2 JOB #10292

NO.	DRAWN BY	DATE	REVISION DESCRIPTION
1	MT/EP2	10/23/19	AS BUILT
2	MEL	10-19	FOR CONSTRUCTION
3	KLV	06-20	CONFORMING TO CONSTRUCTION RECORDS

DRAWN BY EP2/MT DATE 7/1/19
APPROVED BY EP2/MT DATE 7/1/19

BLACK HILLS ENERGY

WEST RAPID CITY SUBSTATION
WIRING DIAGRAM
PANEL 10

DWG NO. WRC-E-240B REVISION 3

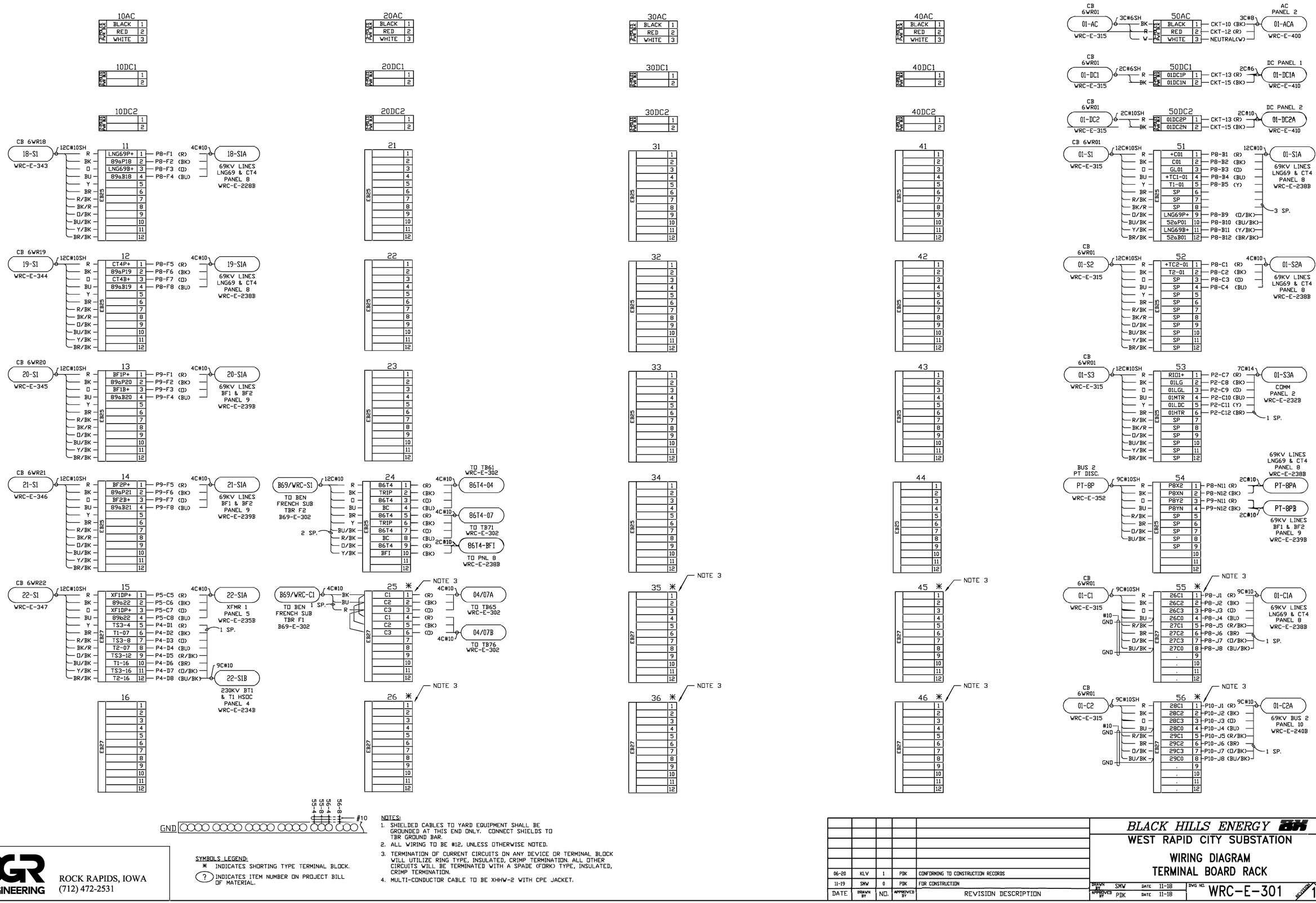

NOTES:

1. SHIELDED CABLES TO YARD EQUIPMENT SHALL BE GROUNDED AT THIS END ONLY. CONNECT SHIELDS TO TBR GROUND BAR.
2. ALL WIRING TO BE #12, UNLESS OTHERWISE NOTED.
3. TERMINATION OF CURRENT CIRCUITS ON ANY DEVICE OR TERMINAL BLOCK WILL UTILIZE RING TYPE, INSULATED, CRIMP TERMINATION. ALL OTHER CIRCUITS WILL BE TERMINATED WITH A SPADE (FORK) TYPE, INSULATED, CRIMP TERMINATION.
4. MULTI-CONDUCTOR CABLE TO BE XHHW-2 WITH CPE JACKET.

SYMBOLS LEGEND:

* INDICATES SHORTING TYPE TERMINAL BLOCK.

(?) INDICATES ITEM NUMBER ON PROJECT BILL OF MATERIAL.

DGR ENGINEERING
ROCK RAPIDS, IOWA
(712) 472-2531

DATE	DRAWN BY	NO.	APPROVED BY	REVISION DESCRIPTION
06-20	KLV	1	PJK	CONFORMING TO CONSTRUCTION RECORDS
11-19	SMW	0	PJK	FOR CONSTRUCTION

BLACK HILLS ENERGY

WEST RAPID CITY SUBSTATION

WIRING DIAGRAM
TERMINAL BOARD RACK

DRAWN BY SMW DATE 11-18
APPROVED BY PJK DATE 11-18

DWG NO. WRC-E-301 REVISION NO. 1

P:\0423300\DWGRECORD\WRCCAD\WRC-E-301.DWG

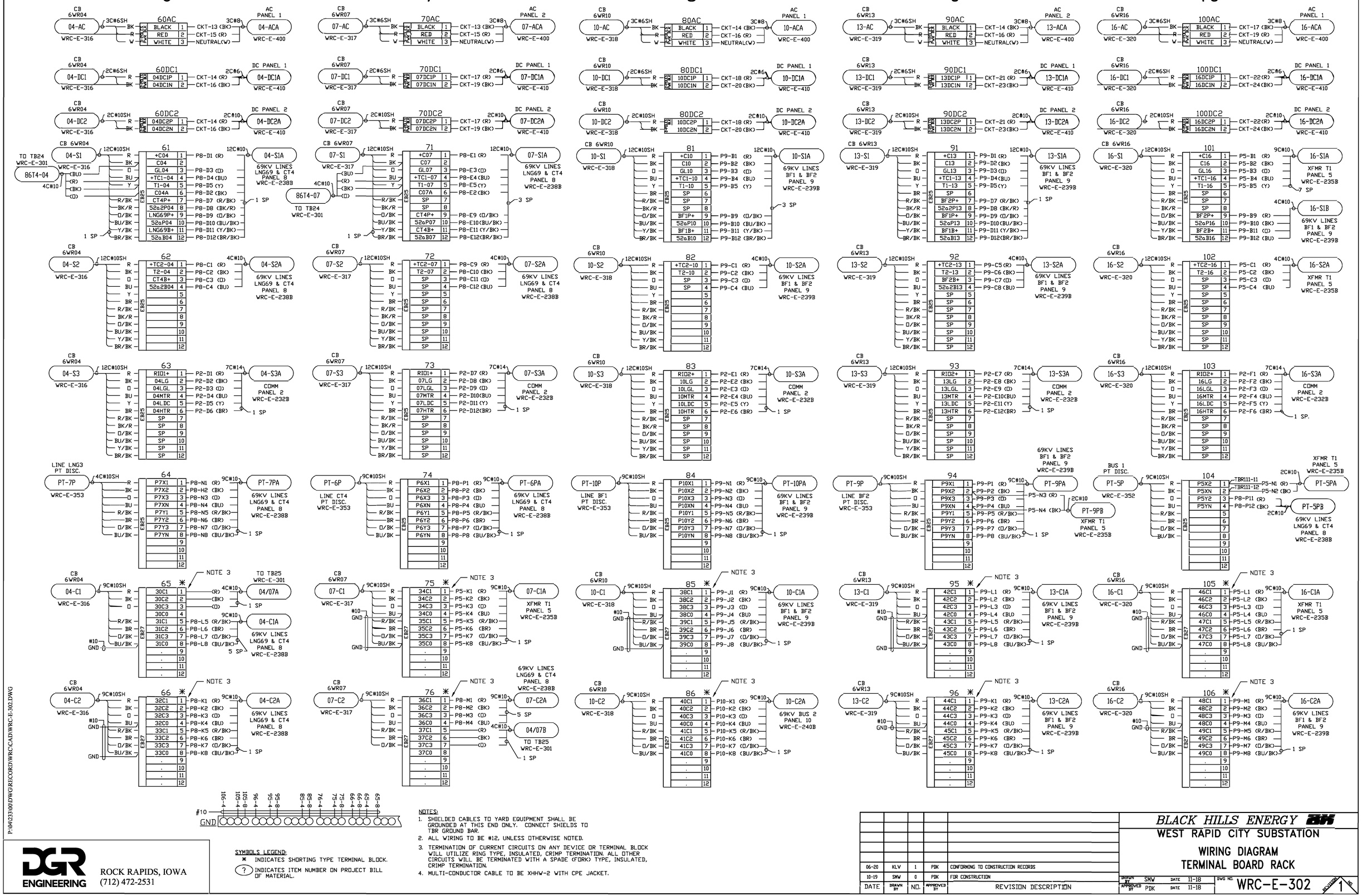

P:\0A233\00DWG\RECORD\WRCCAD\WRC-E-302.DWG

NOTES:
1. SHIELDED CABLES TO YARD EQUIPMENT SHALL BE GROUNDED AT THIS END ONLY. CONNECT SHIELDS TO TBR GROUND BAR.
2. ALL WIRING TO BE #12, UNLESS OTHERWISE NOTED.
3. TERMINATION OF CURRENT CIRCUITS ON ANY DEVICE OR TERMINAL BLOCK WILL UTILIZE RING TYPE, INSULATED, CRIMP TERMINATION. ALL OTHER CIRCUITS WILL BE TERMINATED WITH A SPADE (FORK) TYPE, INSULATED, CRIMP TERMINATION.
4. MULTI-CONDUCTOR CABLE TO BE XHHW-2 WITH CPE JACKET.

SYMBOLS LEGEND:
* INDICATES SHORTING TYPE TERMINAL BLOCK.
(?) INDICATES ITEM NUMBER ON PROJECT BILL OF MATERIAL.

DGR ENGINEERING
ROCK RAPIDS, IOWA
(712) 472-2531

DATE	DRAWN BY	NO.	APPROVED BY	REVISION DESCRIPTION
06-20	KLV	1	PDK	CONFORMING TO CONSTRUCTION RECORDS
10-19	SMW	0	PDK	FOR CONSTRUCTION

BLACK HILLS ENERGY
WEST RAPID CITY SUBSTATION
WIRING DIAGRAM
TERMINAL BOARD RACK

DRAWN BY SMW DATE 11-18
APPROVED BY PDK DATE 11-18
DWG NO. WRC-E-302 REVISION NO. 1

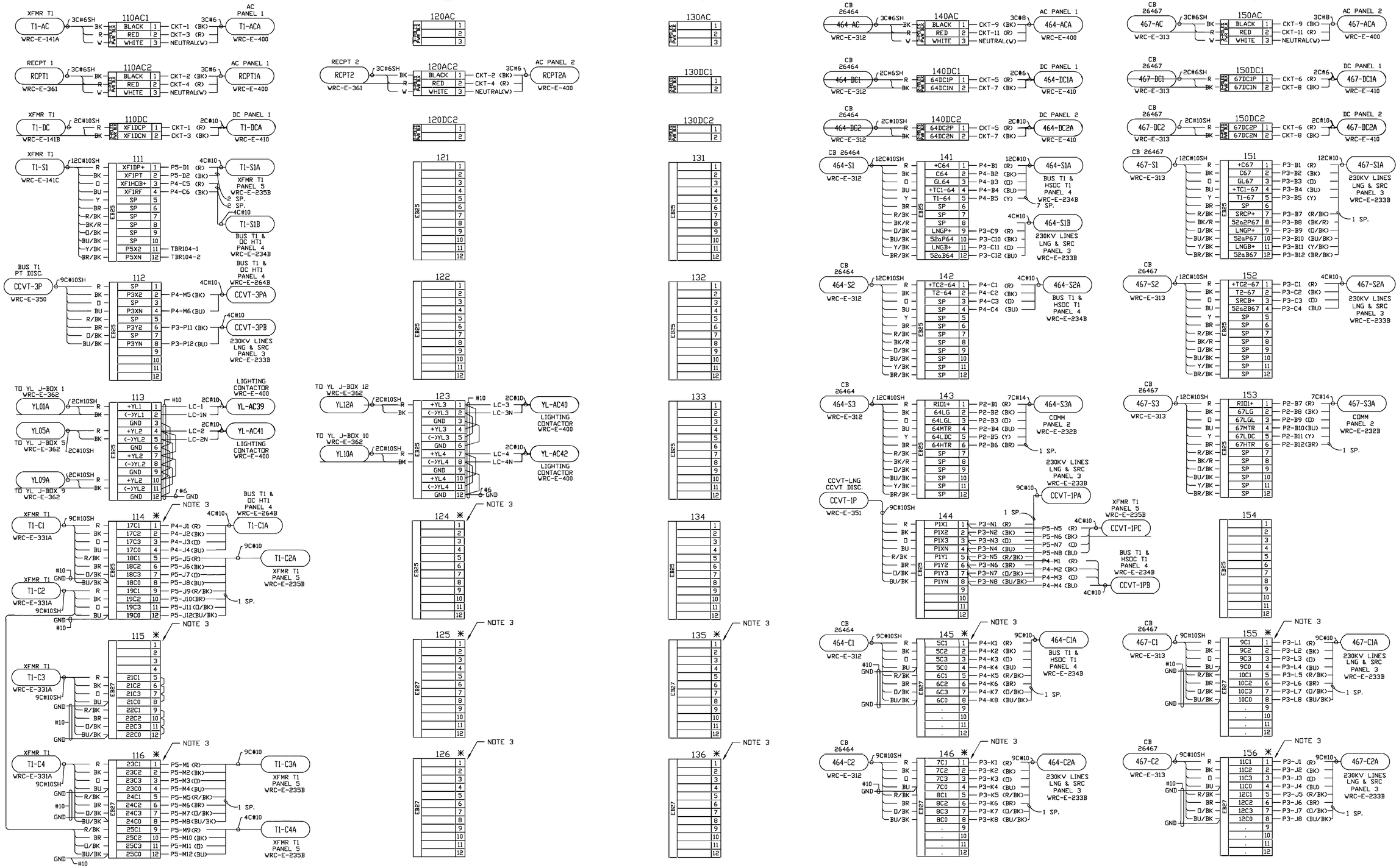

P:\04\233\00\DWG\RECORD\WRC\CAD\WRC-E-303.DWG

DGR ENGINEERING
ROCK RAPIDS, IOWA
(712) 472-2531

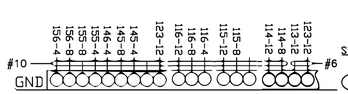

SYMBOLS LEGEND:
* INDICATES SHORTING TYPE TERMINAL BLOCK.
? INDICATES ITEM NUMBER ON PROJECT BILL OF MATERIAL.

NOTES:
1. SHIELDED CABLES TO YARD EQUIPMENT SHALL BE GROUNDED AT THIS END ONLY. CONNECT SHIELDS TO TBR GROUND BAR.
2. ALL WIRING TO BE #12, UNLESS OTHERWISE NOTED.
3. TERMINATION OF CURRENT CIRCUITS ON ANY DEVICE OR TERMINAL BLOCK WILL UTILIZE RING TYPE, INSULATED, CRIMP TERMINATION. ALL OTHER CIRCUITS WILL BE TERMINATED WITH A SPADE (FORK) TYPE, INSULATED, CRIMP TERMINATION.
4. MULTI-CONDUCTOR CABLE TO BE XHHW-2 WITH CPE JACKET.

DATE	DRAWN BY	NO.	APPROVED BY	REVISION DESCRIPTION
06-20	KLV	1	PDK	CONFORMING TO CONSTRUCTION RECORDS
10-19	SMW	0	PDK	FOR CONSTRUCTION

BLACK HILLS ENERGY
WEST RAPID CITY SUBSTATION
WIRING DIAGRAM
TERMINAL BOARD RACK

DRAWN BY SMW DATE 11-18
APPROVED BY PDK DATE 11-18
DWG NO. WRC-E-303
REVISION 1

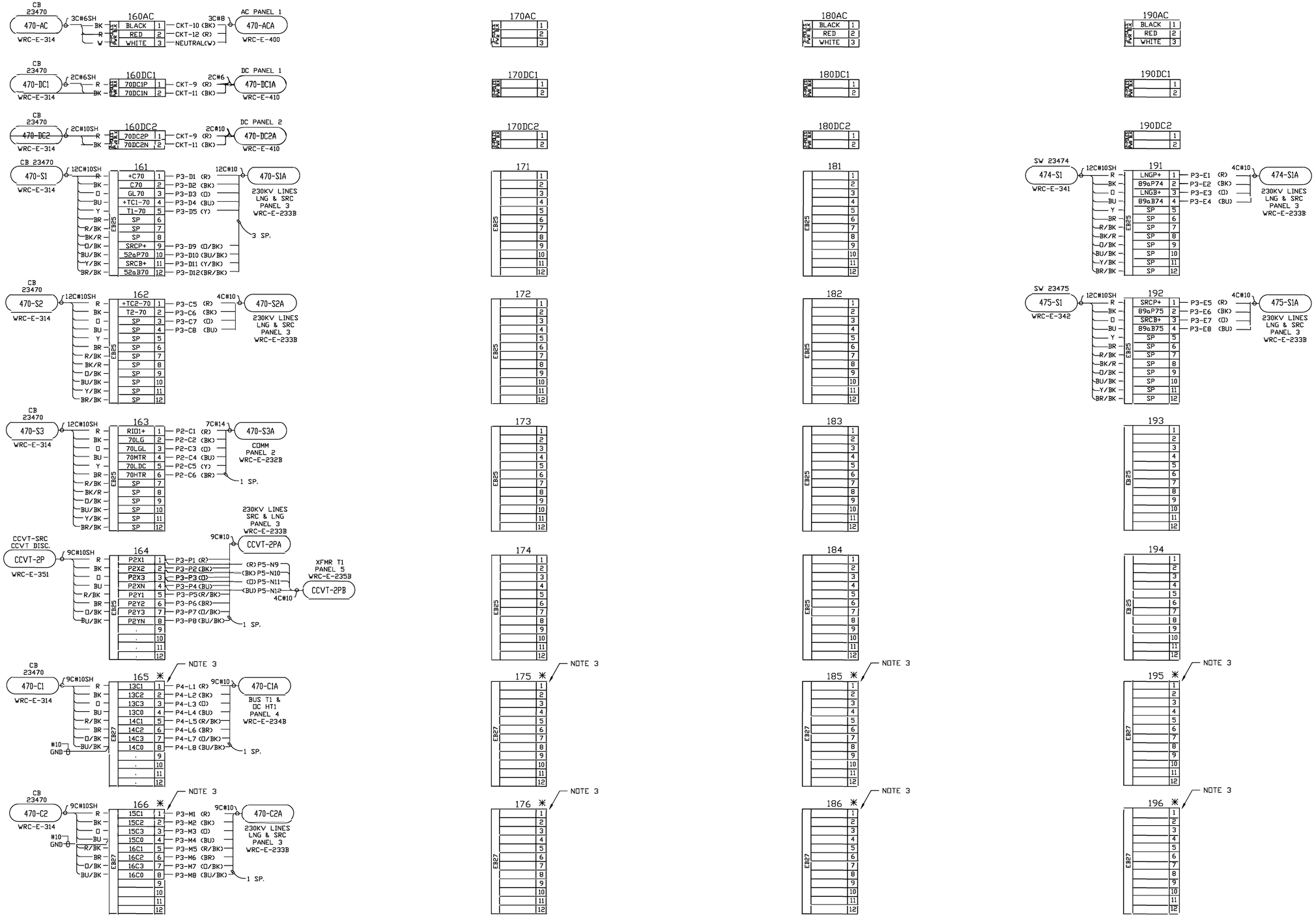

P:\04233 V00\DWG\REC'QRD\WRCCAD\WRC-E-304.DWG

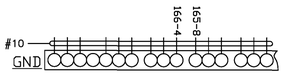

SYMBOLS LEGEND:

* INDICATES SHORTING TYPE TERMINAL BLOCK.

(?) INDICATES ITEM NUMBER ON PROJECT BILL OF MATERIAL.

NOTES:

1. SHIELDED CABLES TO YARD EQUIPMENT SHALL BE GROUNDED AT THIS END ONLY. CONNECT SHIELDS TO TBR GROUND BAR.
2. ALL WIRING TO BE #12, UNLESS OTHERWISE NOTED.
3. TERMINATION OF CURRENT CIRCUITS ON ANY DEVICE OR TERMINAL BLOCK WILL UTILIZE RING TYPE, INSULATED, CRIMP TERMINATION. ALL OTHER CIRCUITS WILL BE TERMINATED WITH A SPADE (FORK) TYPE, INSULATED, CRIMP TERMINATION.
4. MULTI-CONDUCTOR CABLE TO BE XHHW-2 WITH CPE JACKET.

DATE	DRAWN BY	NO.	APPROVED BY	REVISION DESCRIPTION
06-20	KLV	1	PDK	CONFORMING TO CONSTRUCTION RECORDS
10-19	SMW	0	PDK	FOR CONSTRUCTION

DGR ENGINEERING
ROCK RAPIDS, IOWA
(712) 472-2531

BLACK HILLS ENERGY

WEST RAPID CITY SUBSTATION

WIRING DIAGRAM
TERMINAL BOARD RACK

DRAWN BY SMW DATE 11-18
APPROVED BY PDK DATE 11-18
DWG NO. WRC-E-304
REVISION 1

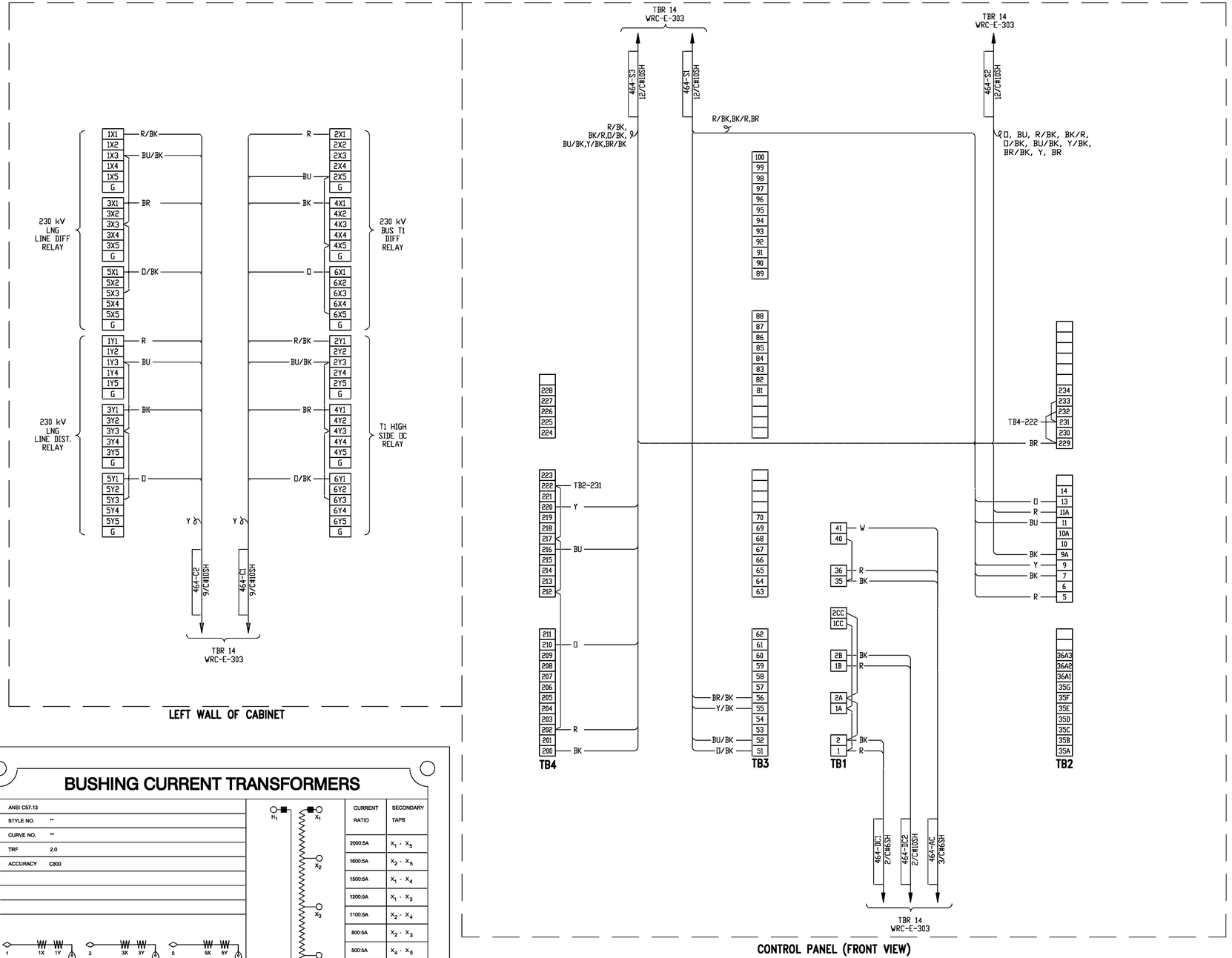

GAS CIRCUIT BREAKER

BREAKER TYPE	200-SFMT-40HE	MECHANISM TYPE	BM-2
RATED MAXIMUM VOLTAGE	245 kV	RATED CAPACITANCE CURRENT SWITCHING	
RATED CONTINUOUS CURRENT	2000 A	RATED OVERHEAD LINE CHARGING CURRENT	160 A
RATED POWER FREQUENCY	60 Hz	ISOLATED BANK/CABLE CURRENT	160 A
RATED SHORT CIRCUIT CURRENT	40 kA	BACK TO BACK SHUNT CURRENT	N/A A
RATED OPERATING DUTY CYCLE	O-0.3s-CO-15s-CO	TRANSIENT INRUSH CURRENT PEAK	N/A kA
PERCENT DC COMPONENT	56%	TRANSIENT INRUSH CURRENT FREQUENCY	N/A Hz
SHORT TIME CURRENT DURATION	1 s	GAS WEIGHT	130 lbs
RATED INTERRUPTING TIME	3 CYCLES	TOTAL WEIGHT	10540 lbs
RATED FULL WAVE LIGHTNING IMPULSE		GAS PRESSURE AT 20°C (68°F) NORMAL	71 psig
WITHSTAND VOLTAGE	900 kV	ALARM	64 psig
RATED OUT OF PHASE SWITCHING CURRENT	10 kA	MINIMUM	57 psig
RATED SWITCHING IMPULSE WITHSTAND VOLTAGE		MOTOR CONTROL VOLTAGE RANGE	90 TO 140 VDC
TERM TO TERM CIRCUIT BREAKER OPEN	N/A kV	MOTOR CURRENT AT RATED VOLTAGE	13 A
TERM TO GND CIRCUIT BREAKER CLOSED	N/A kV	CLOSE CURRENT AT RATED VOLTAGE	3.8 A
CONTROL VOLTAGE RANGE-CLOSING	90 TO 140 VDC	TRIP CURRENT AT RATED VOLTAGE	2 x 6.3 A
TRIPPING	70 TO 140 VDC	SCHEMATIC DIAGRAM	***
SERIAL NUMBER	***	INSTRUCTION BOOK	PEB-0116
YEAR OF MANUFACTURE	***	PARTS LIST	PEB-0117

MITSUBISHI ELECTRIC

MITSUBISHI ELECTRIC POWER PRODUCTS, INC.
WARRENDALE, PA 15086-7537

C101207H01

BUSHING CURRENT TRANSFORMERS

ANSI C57.13	
STYLE NO.	**
CURVE NO.	**
TRF	2.0
ACCURACY	C800

CURRENT RATIO	SECONDARY TAPS
2000:5A	X_1 - X_5
1600:5A	X_2 - X_5
1500:5A	X_1 - X_4
1200:5A	X_1 - X_3
1100:5A	X_2 - X_4
800:5A	X_2 - X_3
500:5A	X_4 - X_5
400:5A	X_1 - X_2
300:5A	X_3 - X_4

MECHANISM HOUSING

MITSUBISHI ELECTRIC

MITSUBISHI ELECTRIC POWER PRODUCTS, INC.

C100237H02

NOTES:
1. SHIELDED CABLES TO YARD EQUIPMENT SHALL BE GROUNDED AT TERMINAL BOARD RACK ONLY. CUT AND TAPE SHIELDS AT YARD EQUIPMENT.

DGR ENGINEERING
ROCK RAPIDS, IOWA
(712) 472-2531

DATE	DRAWN BY	NO.	APPROVED BY	REVISION DESCRIPTION
06-20	KLV	1	PDK	CONFORMING TO CONSTRUCTION RECORDS
10-19	SMW	0	PDK	FOR CONSTRUCTION

BLACK HILLS ENERGY

WEST RAPID CITY SUBSTATION

WIRING DIAGRAM
CB 23464

DRAWN BY SMW DATE 6-19
APPROVED BY PDK DATE 6-19

DWG NO. WRC-E-312 REVISION NO. 1

P:\042330\DWG\RECORD\WRC\CAD\WRC-E-312.DWG

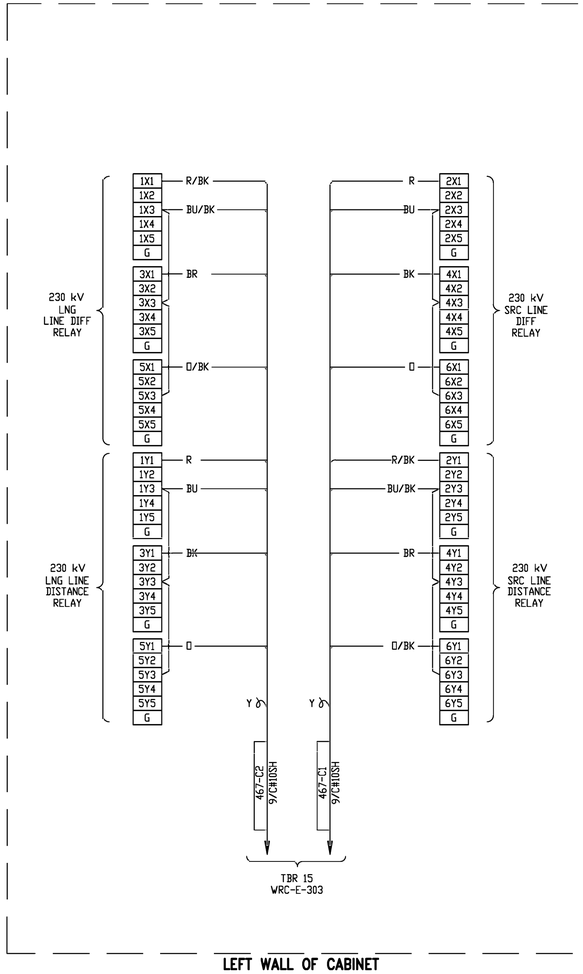

LEFT WALL OF CABINET

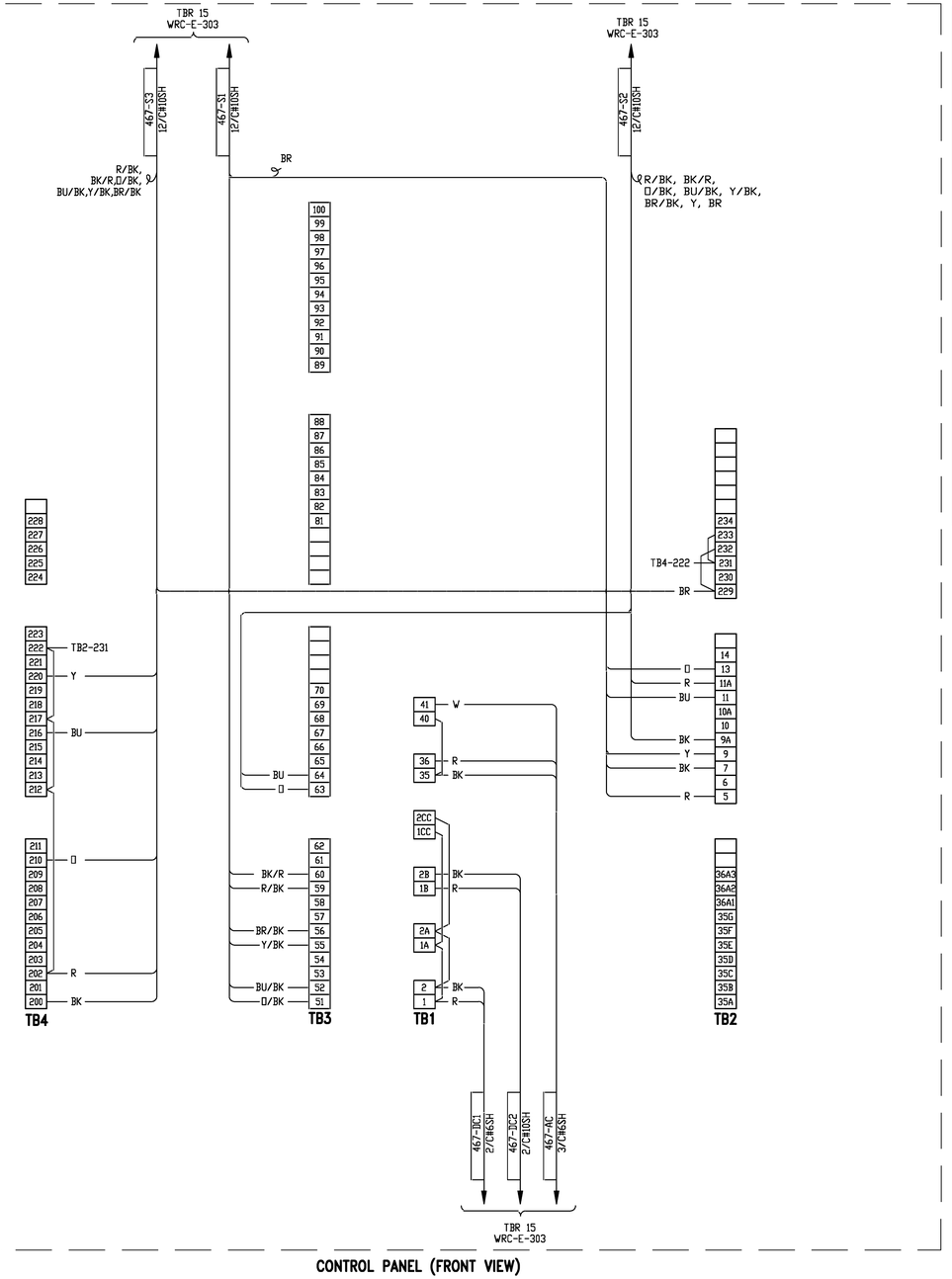

CONTROL PANEL (FRONT VIEW)

GAS CIRCUIT BREAKER

BREAKER TYPE	200-SFMT-40HE	MECHANISM TYPE	BM-2
RATED MAXIMUM VOLTAGE	245 kV	RATED CAPACITANCE CURRENT SWITCHING	
RATED CONTINUOUS CURRENT	2000 A	RATED OVERHEAD LINE CHARGING CURRENT	160 A
RATED POWER FREQUENCY	60 Hz	ISOLATED BANK/CABLE CURRENT	160 A
RATED SHORT CIRCUIT CURRENT	40 kA	BACK TO BACK SHUNT CURRENT	N/A A
RATED OPERATING DUTY CYCLE	O-0.3s-CO-15s-CO	TRANSIENT INRUSH CURRENT PEAK	N/A kA
PERCENT DC COMPONENT	56%	TRANSIENT INRUSH CURRENT FREQUENCY	N/A Hz
SHORT TIME CURRENT DURATION	1 s	GAS WEIGHT	130 lbs
RATED INTERRUPTING TIME	3 CYCLES	TOTAL WEIGHT	10540 lbs
RATED FULL WAVE LIGHTNING IMPULSE WITHSTAND VOLTAGE	900 kV	GAS PRESSURE AT 20°C (68°F) NORMAL	71 psig
		ALARM	64 psig
		MINIMUM	57 psig
RATED OUT OF PHASE SWITCHING CURRENT	10 kA	MOTOR CONTROL VOLTAGE RANGE	90 TO 140 VDC
RATED SWITCHING IMPULSE WITHSTAND VOLTAGE		MOTOR CURRENT AT RATED VOLTAGE	13 A
TERM TO TERM CIRCUIT BREAKER OPEN	N/A kV	CLOSE CURRENT AT RATED VOLTAGE	3.8 A
TERM TO GND CIRCUIT BREAKER CLOSED	N/A kV	TRIP CURRENT AT RATED VOLTAGE	2 x 6.3 A
CONTROL VOLTAGE RANGE-CLOSING	90 TO 140 VDC	SCHEMATIC DIAGRAM	***
TRIPPING	70 TO 140 VDC	INSTRUCTION BOOK	PEB-0116
SERIAL NUMBER	***	PARTS LIST	PEB-0117
YEAR OF MANUFACTURE	***		

MITSUBISHI ELECTRIC

MITSUBISHI ELECTRIC POWER PRODUCTS, INC.
WARRENDALE, PA 15086-7537

C101207H01

BUSHING CURRENT TRANSFORMERS

ANSI C57.13	
STYLE NO.	**
CURVE NO.	**
TRF	2.0
ACCURACY	C800

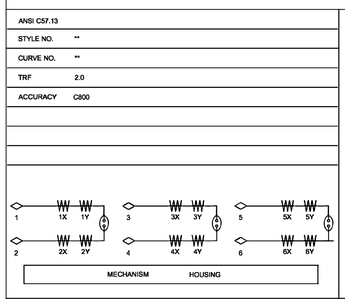

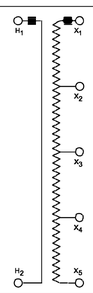

CURRENT RATIO	SECONDARY TAPS
2000:5A	X_1 - X_5
1600:5A	X_2 - X_5
1500:5A	X_1 - X_4
1200:5A	X_1 - X_3
1100:5A	X_2 - X_4
800:5A	X_2 - X_3
500:5A	X_4 - X_5
400:5A	X_1 - X_2
300:5A	X_3 - X_4

MITSUBISHI ELECTRIC

MITSUBISHI ELECTRIC POWER PRODUCTS, INC.

C100237H02

NOTES:
1. SHIELDED CABLES TO YARD EQUIPMENT SHALL BE GROUNDED AT TERMINAL BOARD RACK ONLY. CUT AND TAPE SHIELDS AT YARD EQUIPMENT.

DGR ENGINEERING
ROCK RAPIDS, IOWA
(712) 472-2531

DATE	DRAWN BY	NO.	APPROVED BY	REVISION DESCRIPTION
06-20	KLV	1	PDK	CONFORMING TO CONSTRUCTION RECORDS
10-19	SMW	0	PDK	FOR CONSTRUCTION

BLACK HILLS ENERGY

WEST RAPID CITY SUBSTATION

WIRING DIAGRAM
CB 23467

DRAWN BY SMW DATE 6-19
APPROVED BY PDK DATE 6-19

DWG NO. WRC-E-313 REVISION NO. 1

P:\042330\DWG\RECORD\WRC\CAD\WRC-E-313.DWG

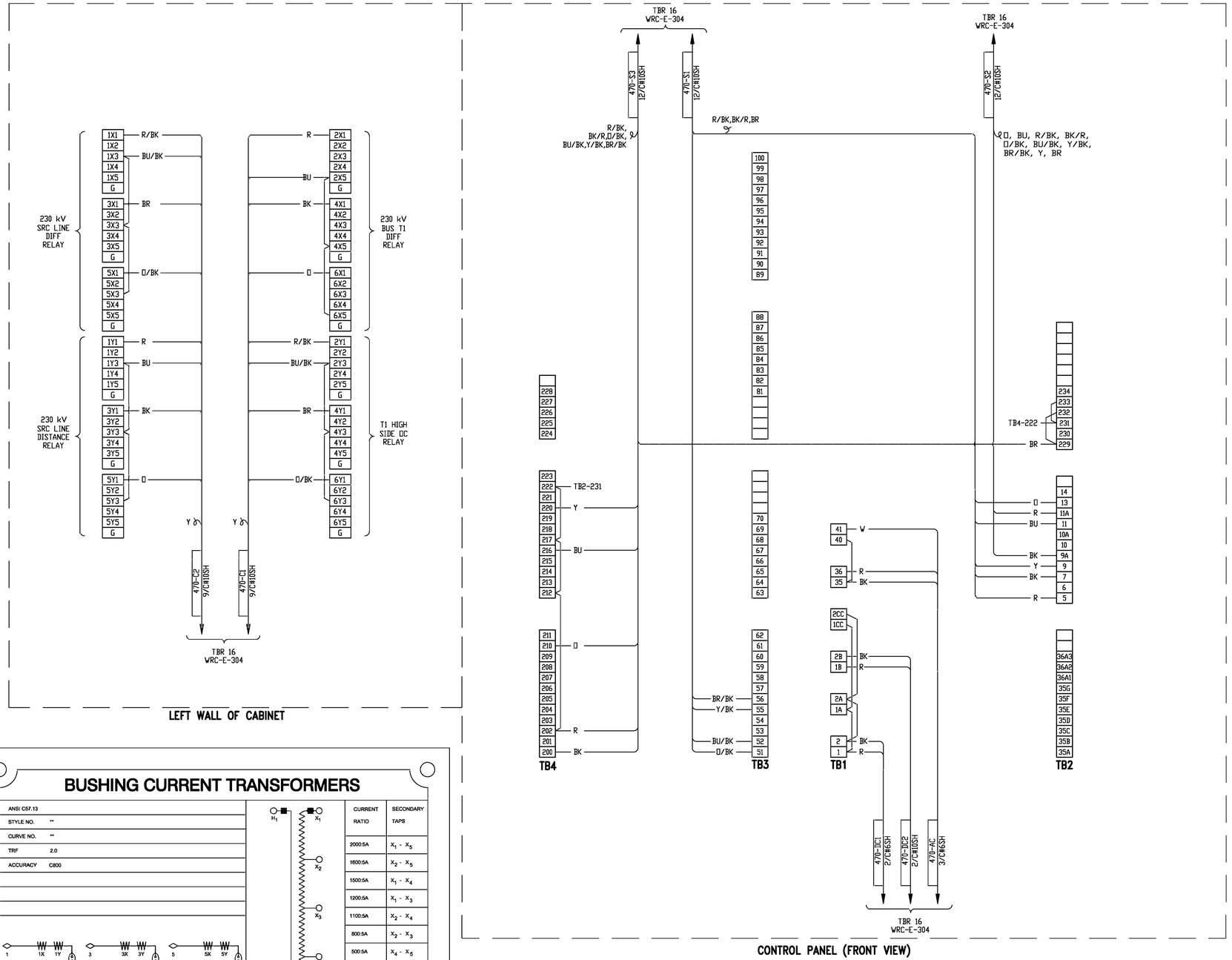

GAS CIRCUIT BREAKER

BREAKER TYPE	200-SFMT-40HE	MECHANISM TYPE	BM-2
RATED MAXIMUM VOLTAGE	245 kV	RATED CAPACITANCE CURRENT SWITCHING	
RATED CONTINUOUS CURRENT	2000 A	RATED OVERHEAD LINE CHARGING CURRENT	160 A
RATED POWER FREQUENCY	60 Hz	ISOLATED BANK/CABLE CURRENT	160 A
RATED SHORT CIRCUIT CURRENT	40 kA	BACK TO BACK SHUNT CURRENT	N/A A
RATED OPERATING DUTY CYCLE	O-0.3s-CO-15s-CO	TRANSIENT INRUSH CURRENT PEAK	N/A kA
PERCENT DC COMPONENT	56%	TRANSIENT INRUSH CURRENT FREQUENCY	N/A Hz
SHORT TIME CURRENT DURATION	1 s	GAS WEIGHT	130 lbs
RATED INTERRUPTING TIME	3 CYCLES	TOTAL WEIGHT	10540 lbs
RATED FULL WAVE LIGHTNING IMPULSE		GAS PRESSURE AT 20°C (68°F) NORMAL	71 psig
WITHSTAND VOLTAGE	900 kV	ALARM	64 psig
RATED OUT OF PHASE SWITCHING CURRENT	10 kA	MINIMUM	57 psig
RATED SWITCHING IMPULSE WITHSTAND VOLTAGE		MOTOR CONTROL VOLTAGE RANGE	90 TO 140 VDC
TERM TO TERM CIRCUIT BREAKER OPEN	N/A kV	MOTOR CURRENT AT RATED VOLTAGE	13 A
TERM TO GND CIRCUIT BREAKER CLOSED	N/A kV	CLOSE CURRENT AT RATED VOLTAGE	3.8 A
CONTROL VOLTAGE RANGE-CLOSING	90 TO 140 VDC	TRIP CURRENT AT RATED VOLTAGE	2 x 6.3 A
TRIPPING	70 TO 140 VDC	SCHEMATIC DIAGRAM	***
SERIAL NUMBER	***	INSTRUCTION BOOK	PEB-0116
YEAR OF MANUFACTURE	***	PARTS LIST	PEB-0117

MITSUBISHI ELECTRIC

MITSUBISHI ELECTRIC POWER PRODUCTS, INC.
WARRENDALE, PA 15086-7537

C101207H01

BUSHING CURRENT TRANSFORMERS

ANSI C57.13	
STYLE NO.	**
CURVE NO.	**
TRF	2.0
ACCURACY	C800

CURRENT RATIO	SECONDARY TAPS
2000:5A	X_1 - X_5
1600:5A	X_2 - X_5
1500:5A	X_1 - X_4
1200:5A	X_1 - X_3
1100:5A	X_2 - X_4
800:5A	X_2 - X_3
500:5A	X_4 - X_5
400:5A	X_1 - X_2
300:5A	X_3 - X_4

MITSUBISHI ELECTRIC
MITSUBISHI ELECTRIC POWER PRODUCTS, INC.

C100237H02

NOTES:
1. SHIELDED CABLES TO YARD EQUIPMENT SHALL BE GROUNDED AT TERMINAL BOARD RACK ONLY. CUT AND TAPE SHIELDS AT YARD EQUIPMENT.

DGR ENGINEERING
ROCK RAPIDS, IOWA
(712) 472-2531

DATE	DRAWN BY	NO.	APPROVED BY	REVISION DESCRIPTION
06-20	KLV	1	PDK	CONFORMING TO CONSTRUCTION RECORDS
10-19	SMW	0	PDK	FOR CONSTRUCTION

BLACK HILLS ENERGY

WEST RAPID CITY SUBSTATION

WIRING DIAGRAM
CB 23470

DRAWN BY SMW DATE 6-19
APPROVED BY PDK DATE 6-19

DWG NO. WRC-E-314 REVISION NO. 1

P:\042330\DWG\RECORD\WRC\CAD\WRC-E-314.DWG

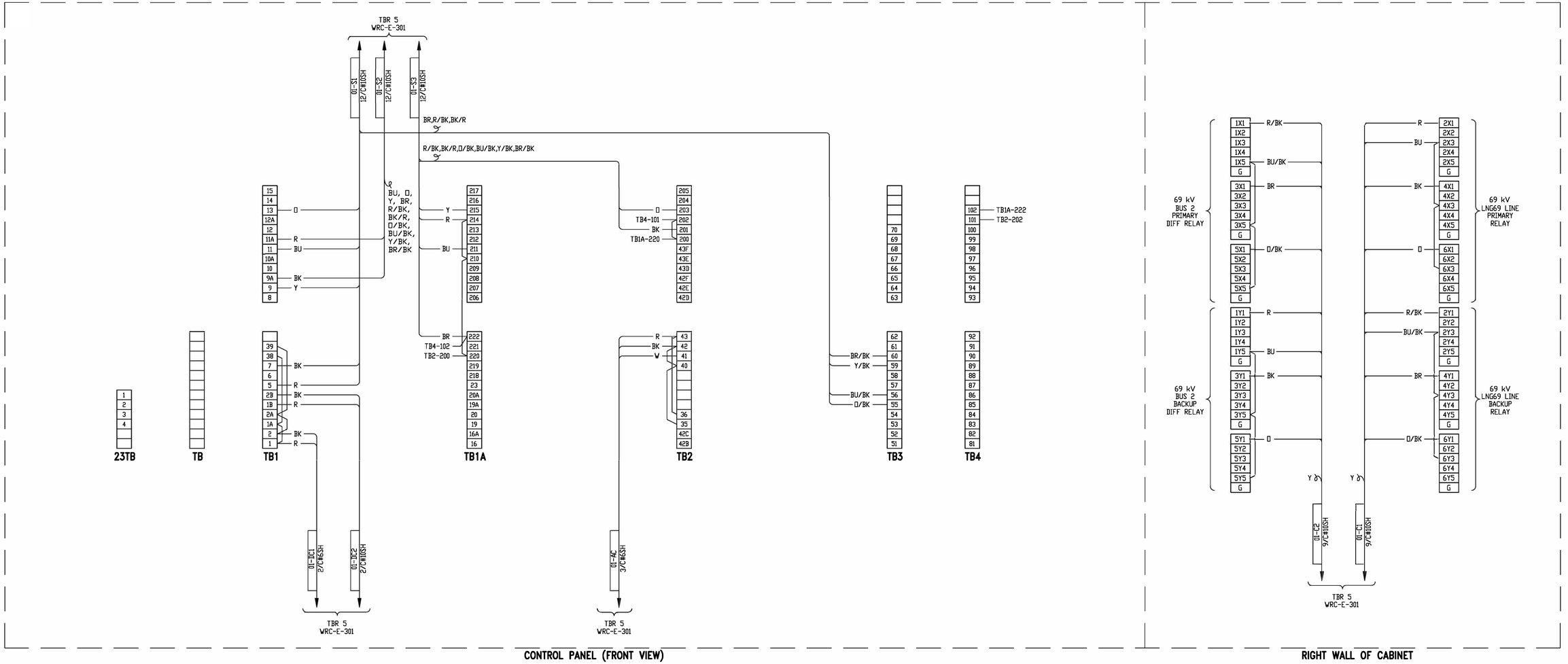

BUSHING CURRENT TRANSFORMERS

ANSI	C57.13
STYLE NO.	**
CURVE NO.	**
TRF	2.0
ACCURACY	C800 AT 2000:5A TAP
FREQUENCY	60 Hz

CURRENT RATIO	SECONDARY TAPS
2000:5A	$X_1 - X_5$
1600:5A	$X_2 - X_5$
1500:5A	$X_1 - X_4$
1200:5A	$X_1 - X_3$
1100:5A	$X_2 - X_4$
800:5A	$X_2 - X_3$
500:5A	$X_4 - X_5$
400:5A	$X_1 - X_2$
300:5A	$X_3 - X_4$

1 1X 1Y — 2 2X 2Y
3 3X 3Y — 4 4X 4Y
5 5X 5Y — 6 6X 6Y
MECHANISM HOUSING

MITSUBISHI ELECTRIC

GAS CIRCUIT BREAKER

BREAKER TYPE	70-SFMT-40HE-B	CAPACITIVE CURRENT SWITCHING	
RATED MAXIMUM VOLTAGE	72.5 kV	RATED LINE CHARGING CURRENT- CLASS	80 A-C1
RATED CONTINUOUS CURRENT	2000 A	ISOLATED BANK/CABLE CURRENT- CLASS	250A - C1
RATED FREQUENCY	60 Hz	BACK TO BACK SHUNT CURRENT- CLASS	N/A
SHORT TIME CURRENT DURATION	3s	INRUSH PEAK CURRENT	N/A
RATED SHORT CIRCUIT CURRENT	40 kA	INRUSH FREQUENCY	N/A
RATED INTERRUPTING TIME	3 CYCLES	MAXIMUM TOTAL WEIGHT	4850 lbs
RATED FULL WAVE IMPULSE VOLTAGE	350 kV	GAS WEIGHT	40 lbs
OUT OF PHASE SWITCHING CURRENT	10 kA	GAS PRESSURE AT 20°C (68°F) -NORMAL	71 psig
PERCENT DC VOLTAGE- X/R	49%-17	- ALARM	64 psig
RATED OPERATING DUTY CYCLE	O-0.3s-CO-15sec-CO	-MINIMUM	57 psig
MOTOR CONTROL VOLTAGE	90-140 VDC	MOTOR CURRENT AT RATED VOLTAGE -START	26.0 A
		-RUN	5.3 A
CLOSING CONTROL VOLTAGE RANGE	90-140 VDC	CLOSING CURRENT AT RATED VOLTAGE	3.8 A
TRIPPING CONTROL VOLTAGE RANGE	70-140 VDC	TRIPPING CURRENT AT RATED VOLTAGE	2 X 6.6 A
MECHANISM TYPE	BM1	INSTRUCTION BOOK/PARTS LIST	MEB0008
AMBIENT OPERATING TEMPERATURE	-45°C TO 50°C		
SCHEMATIC DIAGRAM	****	MAX OPERATING ELEVATION	5500 ft
SERIAL NUMBER	****		
YEAR OF MANUFACTURE	****		

MITSUBISHI ELECTRIC
MITSUBISHI ELECTRIC POWER PRODUCTS, INC
Warrendale, PA 15086-7537

NOTES:
1. SHIELDED CABLES TO YARD EQUIPMENT SHALL BE GROUNDED AT TERMINAL BOARD RACK ONLY. CUT AND TAPE SHIELDS AT YARD EQUIPMENT.

DGR ENGINEERING
ROCK RAPIDS, IOWA
(712) 472-2531

DATE	DRAWN BY	NO.	APPROVED BY	REVISION DESCRIPTION
06-20	KLV	1	PDK	CONFORMING TO CONSTRUCTION RECORDS
10-19	SMW	0	PDK	FOR CONSTRUCTION

BLACK HILLS ENERGY
WEST RAPID CITY SUBSTATION
WIRING DIAGRAM
CB 6WR01

DRAWN BY SMW DATE 6-19
APPROVED BY PDK DATE 6-19
DWG NO. WRC-E-315 REVISION NO. 1

P:\04023\00\DWG\RECORD\WRC\CAD\WRC-E-315.DWG

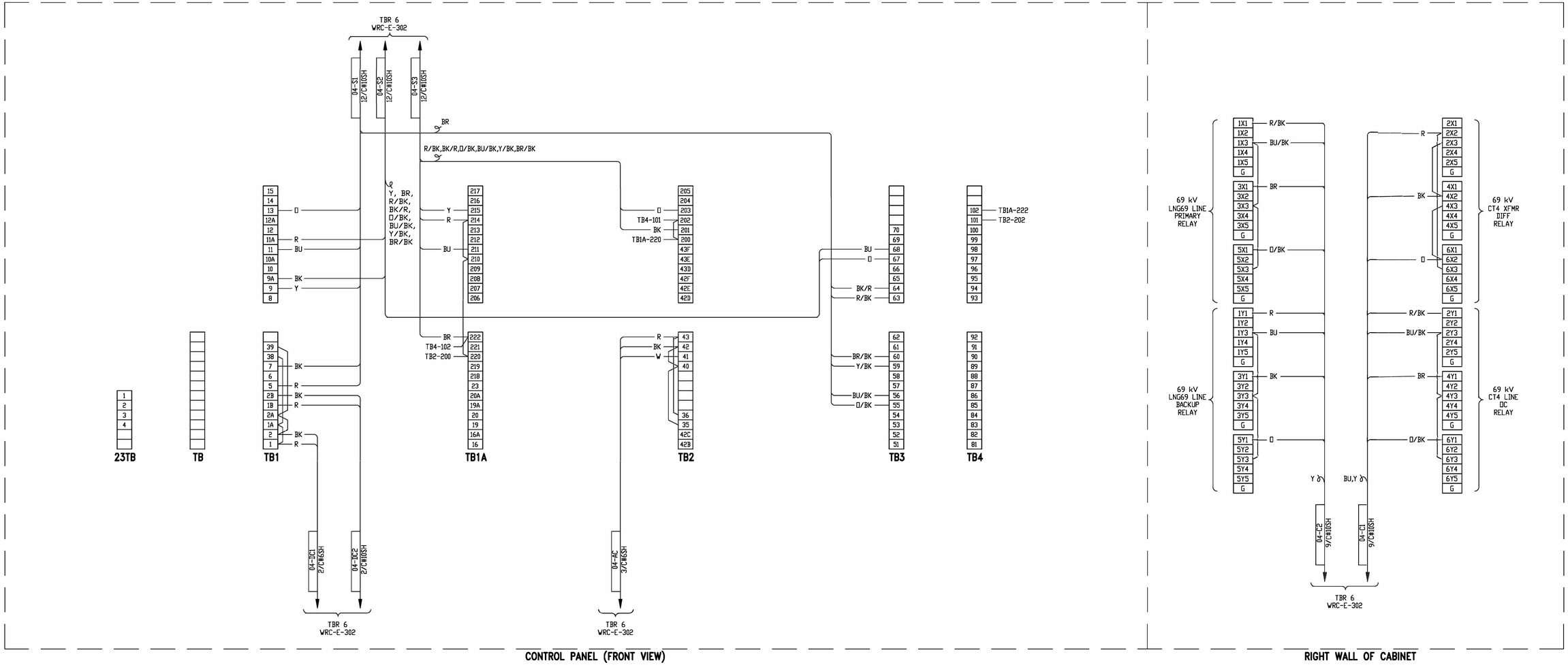

BUSHING CURRENT TRANSFORMERS

ANSI	C57.13
STYLE NO.	**
CURVE NO.	**
TRF	2.0
ACCURACY	C800 AT 2000:5A TAP
FREQUENCY	60 Hz

CURRENT RATIO	SECONDARY TAPS
2000:5A	$X_1 - X_5$
1600:5A	$X_2 - X_5$
1500:5A	$X_1 - X_4$
1200:5A	$X_1 - X_3$
1100:5A	$X_2 - X_4$
800:5A	$X_2 - X_3$
500:5A	$X_4 - X_5$
400:5A	$X_1 - X_2$
300:5A	$X_3 - X_4$

1 1X 1Y
3 3X 3Y
5 5X 5Y
2 2X 2Y
4 4X 4Y
6 6X 6Y
MECHANISM HOUSING
H_1 H_2 X_1 X_2 X_3 X_4 X_5

MITSUBISHI ELECTRIC

GAS CIRCUIT BREAKER

BREAKER TYPE	70-SFMT-40HE-B	CAPACITIVE CURRENT SWITCHING	
RATED MAXIMUM VOLTAGE	72.5 kV	RATED LINE CHARGING CURRENT- CLASS	80 A- C1
RATED CONTINUOUS CURRENT	2000 A	ISOLATED BANK/CABLE CURRENT- CLASS	250A - C1
RATED FREQUENCY	60 Hz	BACK TO BACK SHUNT CURRENT- CLASS	N/A
SHORT TIME CURRENT DURATION	3s	INRUSH PEAK CURRENT	N/A
RATED SHORT CIRCUIT CURRENT	40 kA	INRUSH FREQUENCY	N/A
RATED INTERRUPTING TIME	3 CYCLES	MAXIMUM TOTAL WEIGHT	4850 lbs
RATED FULL WAVE IMPULSE VOLTAGE	350 kV	GAS WEIGHT	40 lbs
OUT OF PHASE SWITCHING CURRENT	10 kA	GAS PRESSURE AT 20°C (68°F) -NORMAL	71 psig
PERCENT DC VOLTAGE- X/R	49%-17	- ALARM	64 psig
RATED OPERATING DUTY CYCLE	O-0.3s-CO-15sec-CO	-MINIMUM	57 psig
MOTOR CONTROL VOLTAGE	90-140 VDC	MOTOR CURRENT AT RATED VOLTAGE -START	26.0 A
		-RUN	5.3 A
CLOSING CONTROL VOLTAGE RANGE	90-140 VDC	CLOSING CURRENT AT RATED VOLTAGE	3.8 A
TRIPPING CONTROL VOLTAGE RANGE	70-140 VDC	TRIPPING CURRENT AT RATED VOLTAGE	2 X 6.6 A
MECHANISM TYPE	BM1	INSTRUCTION BOOK/PARTS LIST	MEB0008
AMBIENT OPERATING TEMPERATURE	-45°C TO 50°C		
SCHEMATIC DIAGRAM	****	MAX OPERATING ELEVATION	5500 ft
SERIAL NUMBER	****		
YEAR OF MANUFACTURE	****		

MITSUBISHI ELECTRIC
MITSUBISHI ELECTRIC POWER PRODUCTS, INC
Warrendale, PA 15086-7537

NOTES:
1. SHIELDED CABLES TO YARD EQUIPMENT SHALL BE GROUNDED AT TERMINAL BOARD RACK ONLY. CUT AND TAPE SHIELDS AT YARD EQUIPMENT.

DGR ENGINEERING
ROCK RAPIDS, IOWA
(712) 472-2531

DATE	DRAWN BY	NO.	APPROVED BY	REVISION DESCRIPTION
06-20	KLV	1	PDK	CONFORMING TO CONSTRUCTION RECORDS
10-19	SMW	0	PDK	FOR CONSTRUCTION

BLACK HILLS ENERGY
WEST RAPID CITY SUBSTATION
WIRING DIAGRAM
CB 6WR04

DRAWN BY SMW DATE 6-19
APPROVED BY PDK DATE 6-19
DWG NO. WRC-E-316
REVISION NO. 1

P:\04023\00\DWG\RECORD\WRC\CAD\WRC-E-316.DWG

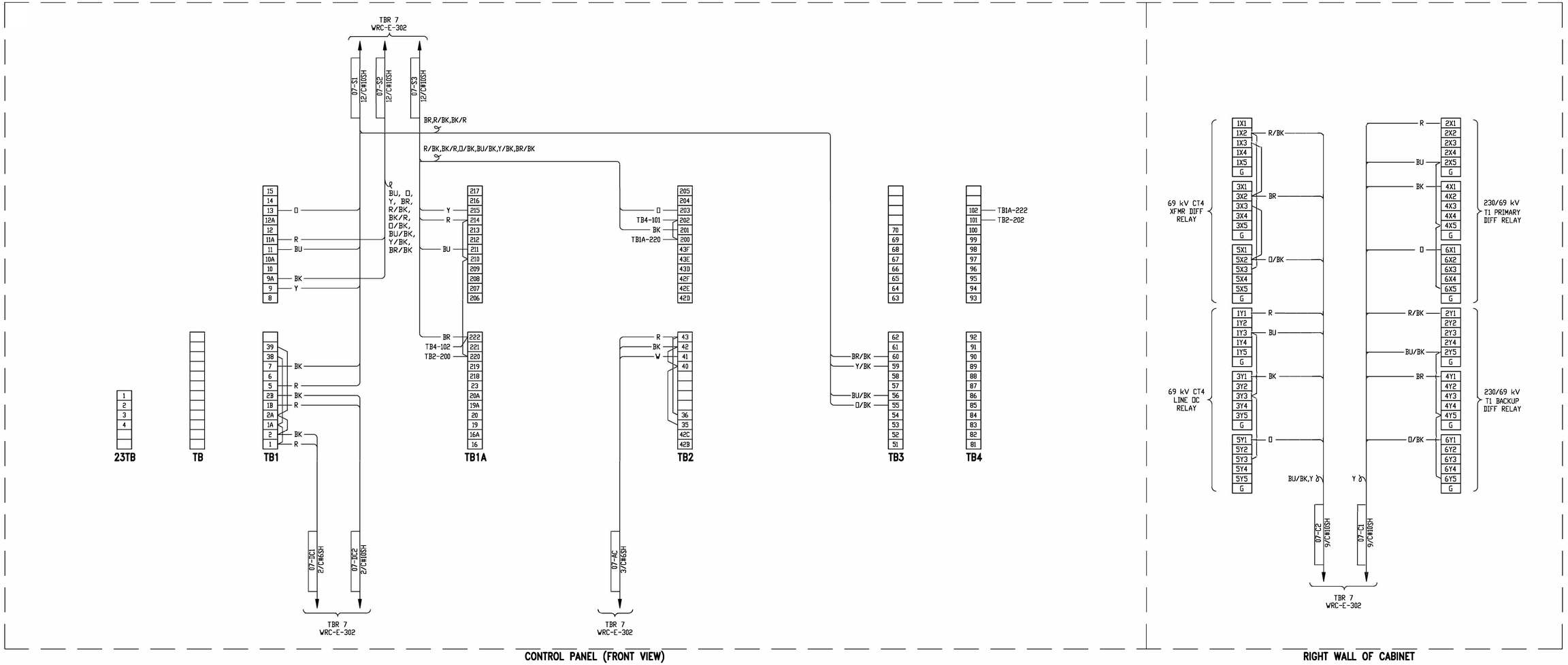

BUSHING CURRENT TRANSFORMERS

ANSI	C57.13
STYLE NO.	**
CURVE NO.	**
TRF	2.0
ACCURACY	C800 AT 2000:5A TAP
FREQUENCY	60 Hz

CURRENT RATIO	SECONDARY TAPS
2000:5A	$X_1 - X_5$
1600:5A	$X_2 - X_5$
1500:5A	$X_1 - X_4$
1200:5A	$X_1 - X_3$
1100:5A	$X_2 - X_4$
800:5A	$X_2 - X_3$
500:5A	$X_4 - X_5$
400:5A	$X_1 - X_2$
300:5A	$X_3 - X_4$

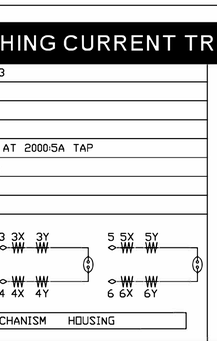

MITSUBISHI ELECTRIC

GAS CIRCUIT BREAKER

BREAKER TYPE	70-SFMT-40HE-B	CAPACITIVE CURRENT SWITCHING	
RATED MAXIMUM VOLTAGE	72.5 kV	RATED LINE CHARGING CURRENT- CLASS	80 A- C1
RATED CONTINUOUS CURRENT	2000 A	ISOLATED BANK/CABLE CURRENT- CLASS	250A - C1
RATED FREQUENCY	60 Hz	BACK TO BACK SHUNT CURRENT- CLASS	N/A
SHORT TIME CURRENT DURATION	3s	INRUSH PEAK CURRENT	N/A
RATED SHORT CIRCUIT CURRENT	40 kA	INRUSH FREQUENCY	N/A
RATED INTERRUPTING TIME	3 CYCLES	MAXIMUM TOTAL WEIGHT	4850 lbs
RATED FULL WAVE IMPULSE VOLTAGE	350 kV	GAS WEIGHT	40 lbs
OUT OF PHASE SWITCHING CURRENT	10 kA	GAS PRESSURE AT 20°C (68°F) -NORMAL	71 psig
PERCENT DC VOLTAGE- X/R	49%-17	- ALARM	64 psig
RATED OPERATING DUTY CYCLE	O-0.3s-CO-15sec-CO	-MINIMUM	57 psig
MOTOR CONTROL VOLTAGE	90-140 VDC	MOTOR CURRENT AT RATED VOLTAGE -START	26.0 A
		-RUN	5.3 A
CLOSING CONTROL VOLTAGE RANGE	90-140 VDC	CLOSING CURRENT AT RATED VOLTAGE	3.8 A
TRIPPING CONTROL VOLTAGE RANGE	70-140 VDC	TRIPPING CURRENT AT RATED VOLTAGE	2 X 6.6 A
MECHANISM TYPE	BM1	INSTRUCTION BOOK/PARTS LIST	MEB0008
AMBIENT OPERATING TEMPERATURE	-45°C TO 50°C		
SCHEMATIC DIAGRAM	****	MAX OPERATING ELEVATION	5500 ft
SERIAL NUMBER	****		
YEAR OF MANUFACTURE	****		

MITSUBISHI ELECTRIC
MITSUBISHI ELECTRIC POWER PRODUCTS, INC
Warrendale, PA 15086-7537

NOTES:
1. SHIELDED CABLES TO YARD EQUIPMENT SHALL BE GROUNDED AT TERMINAL BOARD RACK ONLY. CUT AND TAPE SHIELDS AT YARD EQUIPMENT.

DGR ENGINEERING
ROCK RAPIDS, IOWA
(712) 472-2531

DATE	DRAWN BY	NO.	APPROVED BY	REVISION DESCRIPTION
06-20	KLV	1	PDK	CONFORMING TO CONSTRUCTION RECORDS
10-19	SMW	0	PDK	FOR CONSTRUCTION

BLACK HILLS ENERGY
WEST RAPID CITY SUBSTATION
WIRING DIAGRAM
CB 6WR07

DRAWN BY SMW DATE 6-19
APPROVED BY PDK DATE 6-19
DWG NO. WRC-E-317
REVISION NO. 1

P:\04023\00\DWG\RECORD\WRC\CAD\WRC-E-317.DWG

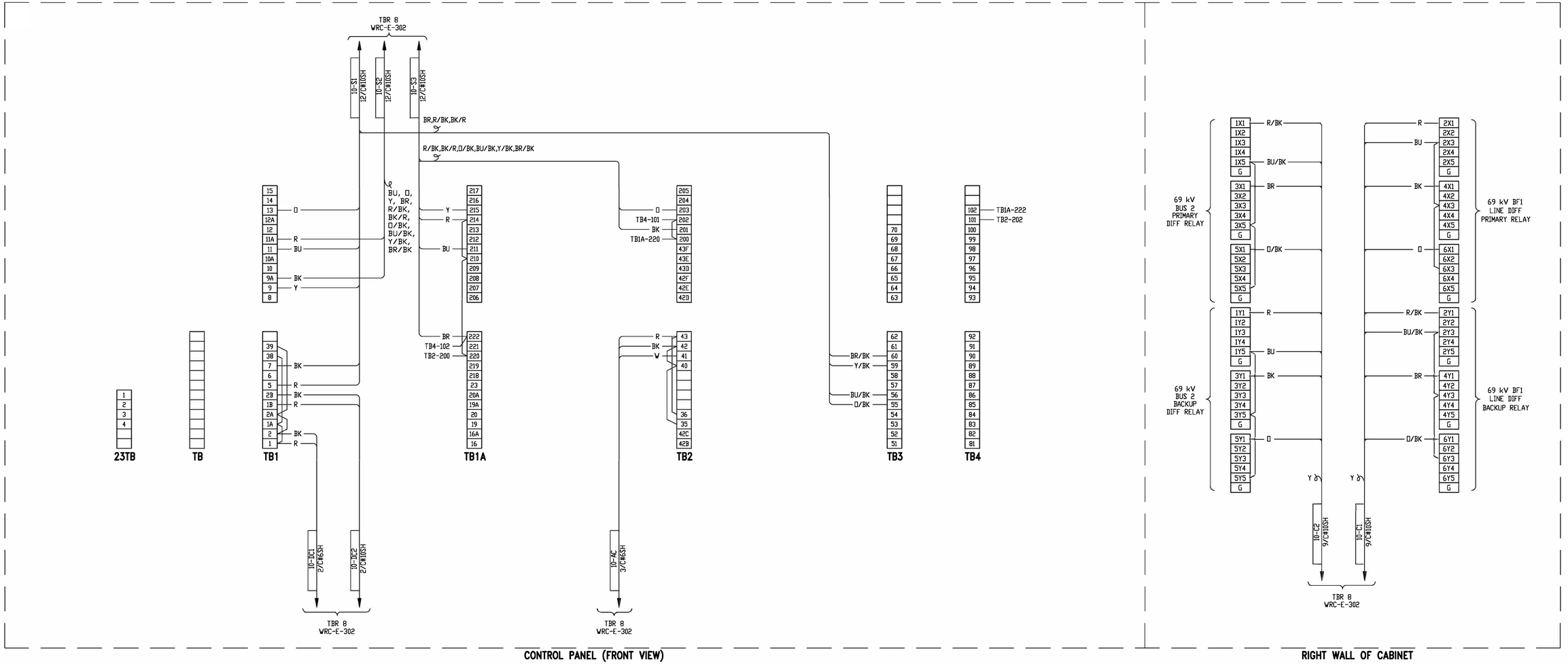

BUSHING CURRENT TRANSFORMERS

ANSI	C57.13
STYLE NO.	**
CURVE NO.	**
TRF	2.0
ACCURACY	C800 AT 2000:5A TAP
FREQUENCY	60 Hz

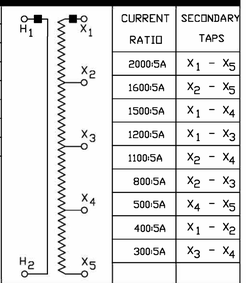

CURRENT RATIO	SECONDARY TAPS
2000:5A	$X_1 - X_5$
1600:5A	$X_2 - X_5$
1500:5A	$X_1 - X_4$
1200:5A	$X_1 - X_3$
1100:5A	$X_2 - X_4$
800:5A	$X_2 - X_3$
500:5A	$X_4 - X_5$
400:5A	$X_1 - X_2$
300:5A	$X_3 - X_4$

MITSUBISHI ELECTRIC

GAS CIRCUIT BREAKER

BREAKER TYPE	70-SFMT-40HE-B	CAPACITIVE CURRENT SWITCHING	
RATED MAXIMUM VOLTAGE	72.5 kV	RATED LINE CHARGING CURRENT- CLASS	80 A- C1
RATED CONTINUOUS CURRENT	2000 A	ISOLATED BANK/CABLE CURRENT- CLASS	250A - C1
RATED FREQUENCY	60 Hz	BACK TO BACK SHUNT CURRENT- CLASS	N/A
SHORT TIME CURRENT DURATION	3s	INRUSH PEAK CURRENT	N/A
RATED SHORT CIRCUIT CURRENT	40 kA	INRUSH FREQUENCY	N/A
RATED INTERRUPTING TIME	3 CYCLES	MAXIMUM TOTAL WEIGHT	4850 lbs
RATED FULL WAVE IMPULSE VOLTAGE	350 kV	GAS WEIGHT	40 lbs
OUT OF PHASE SWITCHING CURRENT	10 kA	GAS PRESSURE AT 20°C (68°F) -NORMAL	71 psig
PERCENT DC VOLTAGE- X/R	49%-17	- ALARM	64 psig
RATED OPERATING DUTY CYCLE	O-0.3s-CO-15sec-CO	-MINIMUM	57 psig
MOTOR CONTROL VOLTAGE	90-140 VDC	MOTOR CURRENT AT RATED VOLTAGE -START	26.0 A
		-RUN	5.3 A
CLOSING CONTROL VOLTAGE RANGE	90-140 VDC	CLOSING CURRENT AT RATED VOLTAGE	3.8 A
TRIPPING CONTROL VOLTAGE RANGE	70-140 VDC	TRIPPING CURRENT AT RATED VOLTAGE	2 X 6.6 A
MECHANISM TYPE	BM1	INSTRUCTION BOOK/PARTS LIST	MEB0008
AMBIENT OPERATING TEMPERATURE	-45°C TO 50°C		
SCHEMATIC DIAGRAM	****	MAX OPERATING ELEVATION	5500 ft
SERIAL NUMBER	****		
YEAR OF MANUFACTURE	****		

MITSUBISHI ELECTRIC
MITSUBISHI ELECTRIC POWER PRODUCTS, INC
Warrendale, PA 15086-7537

NOTES:
1. SHIELDED CABLES TO YARD EQUIPMENT SHALL BE GROUNDED AT TERMINAL BOARD RACK ONLY. CUT AND TAPE SHIELDS AT YARD EQUIPMENT.

DGR ENGINEERING
ROCK RAPIDS, IOWA
(712) 472-2531

DATE	DRAWN BY	NO.	APPROVED BY	REVISION DESCRIPTION
06-20	KLV	1	PDK	CONFORMING TO CONSTRUCTION RECORDS
10-19	SMW	0	PDK	FOR CONSTRUCTION

BLACK HILLS ENERGY
WEST RAPID CITY SUBSTATION
WIRING DIAGRAM
CB 6WR10

DRAWN BY SMW DATE 6-19
APPROVED BY PDK DATE 6-19
DWG NO. WRC-E-318
REVISION NO. 1

P:\04023\00\DWG\RECORD\WRC\CAD\WRC-E-318.DWG

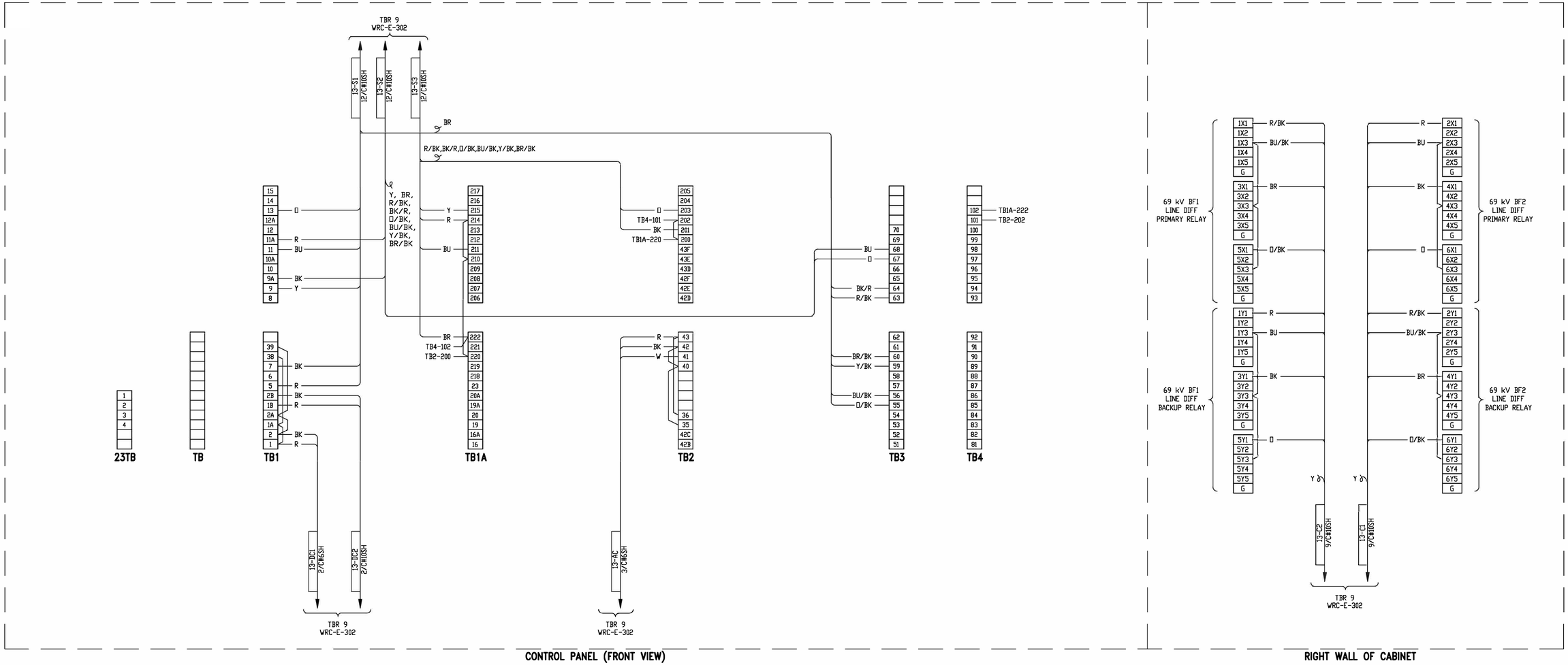

BUSHING CURRENT TRANSFORMERS

ANSI	C57.13
STYLE NO.	**
CURVE NO.	**
TRF	2.0
ACCURACY	C800 AT 2000:5A TAP
FREQUENCY	60 Hz

CURRENT RATIO	SECONDARY TAPS
2000:5A	$X_1 - X_5$
1600:5A	$X_2 - X_5$
1500:5A	$X_1 - X_4$
1200:5A	$X_1 - X_3$
1100:5A	$X_2 - X_4$
800:5A	$X_2 - X_3$
500:5A	$X_4 - X_5$
400:5A	$X_1 - X_2$
300:5A	$X_3 - X_4$

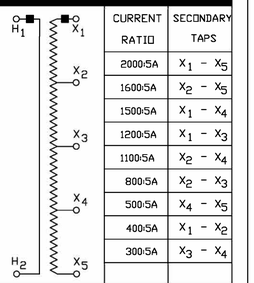

MECHANISM HOUSING

MITSUBISHI ELECTRIC

GAS CIRCUIT BREAKER

BREAKER TYPE	70-SFMT-40HE-B	CAPACITIVE CURRENT SWITCHING	
RATED MAXIMUM VOLTAGE	72.5 kV	RATED LINE CHARGING CURRENT- CLASS	80 A- C1
RATED CONTINUOUS CURRENT	2000 A	ISOLATED BANK/CABLE CURRENT- CLASS	250A - C1
RATED FREQUENCY	60 Hz	BACK TO BACK SHUNT CURRENT- CLASS	N/A
SHORT TIME CURRENT DURATION	3s	INRUSH PEAK CURRENT	N/A
RATED SHORT CIRCUIT CURRENT	40 kA	INRUSH FREQUENCY	N/A
RATED INTERRUPTING TIME	3 CYCLES	MAXIMUM TOTAL WEIGHT	4850 lbs
RATED FULL WAVE IMPULSE VOLTAGE	350 kV	GAS WEIGHT	40 lbs
OUT OF PHASE SWITCHING CURRENT	10 kA	GAS PRESSURE AT 20°C (68°F) -NORMAL	71 psig
PERCENT DC VOLTAGE- X/R	49%-17	- ALARM	64 psig
RATED OPERATING DUTY CYCLE	O-0.3s-CO-15sec-CO	-MINIMUM	57 psig
MOTOR CONTROL VOLTAGE	90-140 VDC	MOTOR CURRENT AT RATED VOLTAGE -START	26.0 A
		-RUN	5.3 A
CLOSING CONTROL VOLTAGE RANGE	90-140 VDC	CLOSING CURRENT AT RATED VOLTAGE	3.8 A
TRIPPING CONTROL VOLTAGE RANGE	70-140 VDC	TRIPPING CURRENT AT RATED VOLTAGE	2 X 6.6 A
MECHANISM TYPE	BM1	INSTRUCTION BOOK/PARTS LIST	MEB0008
AMBIENT OPERATING TEMPERATURE	-45°C TO 50°C		
SCHEMATIC DIAGRAM	****	MAX OPERATING ELEVATION	5500 ft
SERIAL NUMBER	****		
YEAR OF MANUFACTURE	****		

MITSUBISHI ELECTRIC

MITSUBISHI ELECTRIC POWER PRODUCTS, INC
Warrendale, PA 15086-7537

NOTES:
1. SHIELDED CABLES TO YARD EQUIPMENT SHALL BE GROUNDED AT TERMINAL BOARD RACK ONLY. CUT AND TAPE SHIELDS AT YARD EQUIPMENT.

DGR ENGINEERING
ROCK RAPIDS, IOWA
(712) 472-2531

DATE	DRAWN BY	NO.	APPROVED BY	REVISION DESCRIPTION
06-20	KLV	1	PDK	CONFORMING TO CONSTRUCTION RECORDS
10-19	SMW	0	PDK	FOR CONSTRUCTION

BLACK HILLS ENERGY

WEST RAPID CITY SUBSTATION

WIRING DIAGRAM
CB 6WR13

DRAWN BY SMW DATE 6-19
APPROVED BY PDK DATE 6-19
DWG NO. WRC-E-319
SECTION 1 NO.

P:\04023\00\DWG\RECORD\WRCC\CAD\WRC-E-319.DWG

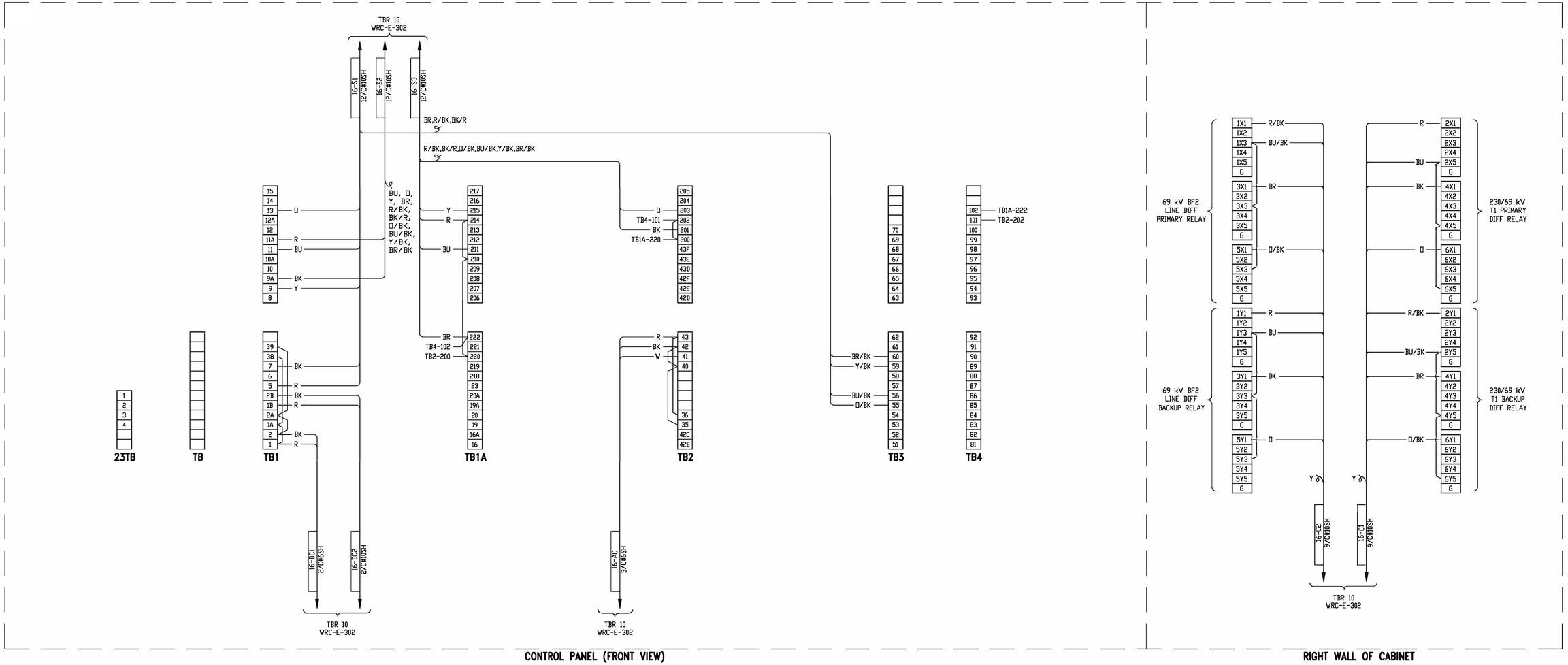

BUSHING CURRENT TRANSFORMERS

ANSI	C57.13
STYLE NO.	**
CURVE NO.	**
TRF	2.0
ACCURACY	C800 AT 2000:5A TAP
FREQUENCY	60 Hz

CURRENT RATIO	SECONDARY TAPS
2000:5A	$X_1 - X_5$
1600:5A	$X_2 - X_5$
1500:5A	$X_1 - X_4$
1200:5A	$X_1 - X_3$
1100:5A	$X_2 - X_4$
800:5A	$X_2 - X_3$
500:5A	$X_4 - X_5$
400:5A	$X_1 - X_2$
300:5A	$X_3 - X_4$

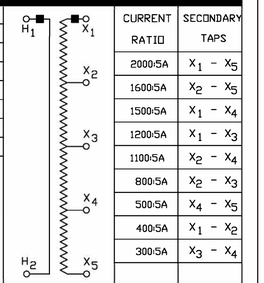

MITSUBISHI ELECTRIC

GAS CIRCUIT BREAKER

BREAKER TYPE	70-SFMT-40HE-B	CAPACITIVE CURRENT SWITCHING	
RATED MAXIMUM VOLTAGE	72.5 kV	RATED LINE CHARGING CURRENT- CLASS	80 A- C1
RATED CONTINUOUS CURRENT	2000 A	ISOLATED BANK/CABLE CURRENT- CLASS	250A - C1
RATED FREQUENCY	60 Hz	BACK TO BACK SHUNT CURRENT- CLASS	N/A
SHORT TIME CURRENT DURATION	3s	INRUSH PEAK CURRENT	N/A
RATED SHORT CIRCUIT CURRENT	40 kA	INRUSH FREQUENCY	N/A
RATED INTERRUPTING TIME	3 CYCLES	MAXIMUM TOTAL WEIGHT	4850 lbs
RATED FULL WAVE IMPULSE VOLTAGE	350 kV	GAS WEIGHT	40 lbs
OUT OF PHASE SWITCHING CURRENT	10 kA	GAS PRESSURE AT 20°C (68°F) -NORMAL	71 psig
PERCENT DC VOLTAGE- X/R	49%-17	- ALARM	64 psig
RATED OPERATING DUTY CYCLE	O-0.3s-CO-15sec-CO	-MINIMUM	57 psig
MOTOR CONTROL VOLTAGE	90-140 VDC	MOTOR CURRENT AT RATED VOLTAGE -START	26.0 A
		-RUN	5.3 A
CLOSING CONTROL VOLTAGE RANGE	90-140 VDC	CLOSING CURRENT AT RATED VOLTAGE	3.8 A
TRIPPING CONTROL VOLTAGE RANGE	70-140 VDC	TRIPPING CURRENT AT RATED VOLTAGE	2 X 6.6 A
MECHANISM TYPE	BM1	INSTRUCTION BOOK/PARTS LIST	MEB0008
AMBIENT OPERATING TEMPERATURE	-45°C TO 50°C		
SCHEMATIC DIAGRAM	****	MAX OPERATING ELEVATION	5500 ft
SERIAL NUMBER	****		
YEAR OF MANUFACTURE	****		

MITSUBISHI ELECTRIC
MITSUBISHI ELECTRIC POWER PRODUCTS, INC
Warrendale, PA 15086-7537

NOTES:
1. SHIELDED CABLES TO YARD EQUIPMENT SHALL BE GROUNDED AT TERMINAL BOARD RACK ONLY. CUT AND TAPE SHIELDS AT YARD EQUIPMENT.

DGR ENGINEERING
ROCK RAPIDS, IOWA
(712) 472-2531

DATE	DRAWN BY	NO.	APPROVED BY	REVISION DESCRIPTION
06-20	KLV	1	PDK	CONFORMING TO CONSTRUCTION RECORDS
10-19	SMW	0	PDK	FOR CONSTRUCTION

BLACK HILLS ENERGY
WEST RAPID CITY SUBSTATION
WIRING DIAGRAM
CB 6WR16

DRAWN BY SMW DATE 6-19
APPROVED BY PDK DATE 6-19
DWG NO. WRC-E-320 REVISION NO. 1

P:\04023\00\DWG\RECORD\WRC\CAD\WRC-E-320.DWG

SWING PANEL POINT TO POINT (REAR VIEW)

BACK PANEL POINT TO POINT (FRONT VIEW)

ITEMS	TYPE	SIZE	TYPE OF TERMINAL
CONTROL WIRE	SIS/XHHW	14 & 12	AMP
CT WIRE		10	INSULATED
HEATER WIRE	TEFLON	12	RING TONGUE

1. CONDUIT WIRE, XHHW.
2. GROUND WIRE, #12AWG, XHHW(GREEN).
3. ALL WIRE SIZE WILL BE #14AWG, UNLESS OTHERWISE INDICATED.
4. ALL WIRE SIZE TO ETM WILL BE #16AWG.

THIS DRAWING WAS CREATED FROM DELTA STAR DRAWING F843460, REV. 0.

DATE	DRAWN BY	NO.	APPROVED BY	REVISION DESCRIPTION
06-20	KLV	1	PJK	CONFORMING TO CONSTRUCTION RECORDS
2-2020	SMW	0	PJK	FOR CONSTRUCTION

BLACK HILLS ENERGY

WEST RAPID CITY SUBSTATION

WIRING DIAGRAM

XFMR T1

DRAWN BY SMW DATE 1-2020 DWG NO. WRC-E-331A REVISION 1

APPROVED BY PJK DATE 1-2020

DGR ENGINEERING

ROCK RAPIDS, IOWA

(712) 472-2531

P:\04023\00\DWG\RECORD\WRC\CAD\WRC-E-331A.DWG

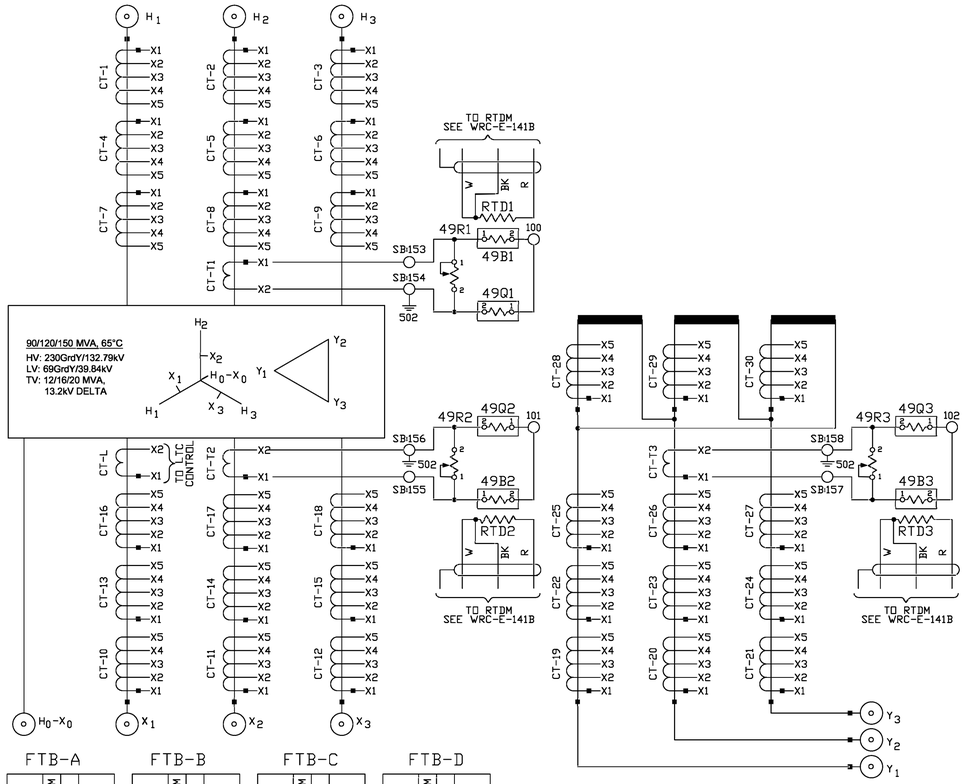

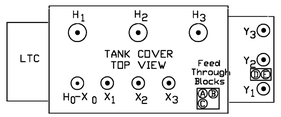

FTB-A

SB	TERM	X	CT
1	1	1	1
2	2	2	
3	3	3	
4	4	4	
5	5	5	
6	6	1	2
7	7	2	
8	8	3	
9	9	4	
10	10	5	
11	11	1	3
12	12	2	
13	13	3	
14	14	4	
15	15	5	
16	16	1	4
17	17	2	
18	18	3	
19	19	4	
20	20	5	
21	21	1	5
22	22	2	
23	23	3	
24	24	4	
25	25	5	
26	26	1	6
27	27	2	
28	28	3	
29	29	4	
30	30	5	
31	31	1	7
32	32	2	
33	33	3	
34	34	4	
35	35	5	
153	36	1	T1
154	37	2	

FTB-B

SB	TERM	X	CT
36	1	1	8
37	2	2	
38	3	3	
39	4	4	
40	5	5	
41	6	1	9
42	7	2	
43	8	3	
44	9	4	
45	10	5	
46	11	1	10
47	12	2	
48	13	3	
49	14	4	
50	15	5	
51	16	1	11
52	17	2	
53	18	3	
54	19	4	
55	20	5	
56	21	1	12
57	22	2	
58	23	3	
59	24	4	
60	25	5	
61	26	1	13
62	27	2	
63	28	3	
64	29	4	
65	30	5	
66	31	1	14
67	32	2	
68	33	3	
69	34	4	
70	35	5	
	36		
	37		

FTB-C

SB	TERM	X	CT
71	1	1	15
72	2	2	
73	3	3	
74	4	4	
75	5	5	
76	6	1	16
77	7	2	
78	8	3	
79	9	4	
80	10	5	
81	11	1	17
82	12	2	
83	13	3	
84	14	4	
85	15	5	
86	16	1	18
87	17	2	
88	18	3	
89	19	4	
90	20	5	
151	21	1	L
152	22	2	
155	23	1	T2
156	24	2	
	25		
	26		
	27		
	28		
	29		
	30		
	31		
	32		
	33		
	34		
	35		
	36		
	37		

FTB-D

SB	TERM	X	CT
91	1	1	19
92	2	2	
93	3	3	
94	4	4	
95	5	5	
96	6	1	20
97	7	2	
98	8	3	
99	9	4	
100	10	5	
101	11	1	21
102	12	2	
103	13	3	
104	14	4	
105	15	5	
106	16	1	22
107	17	2	
108	18	3	
109	19	4	
110	20	5	
111	21	1	23
112	22	2	
113	23	3	
114	24	4	
115	25	5	
116	26	1	24
117	27	2	
118	28	3	
119	29	4	
120	30	5	
121	31	1	25
122	32	2	
123	33	3	
124	34	4	
125	35	5	
157	36	1	T3
158	37	2	

FTB-E

SB	TERM	X	CT
126	1	1	26
127	2	2	
128	3	3	
129	4	4	
130	5	5	
131	6	1	27
132	7	2	
133	8	3	
134	9	4	
135	10	5	
136	11	1	28
137	12	2	
138	13	3	
139	14	4	
140	15	5	
141	16	1	29
142	17	2	
143	18	3	
144	19	4	
145	20	5	
146	21	1	30
147	22	2	
148	23	3	
149	24	4	
150	25	5	

BUSHING CURRENT TRANSFORMER
FOR LOAD TAP CHANGER CONTROL
CT-L RATIO: 1400:5

BUSHING CURRENT TRANSFORMER
FOR HV WINDING HOT-SPOT TEMPERATURE
CT-T1 RATIO: 400:5

BUSHING CURRENT TRANSFORMER
FOR LV WINDING HOT-SPOT TEMPERATURE
CT-T2 RATIO: 1400:5

BUSHING CURRENT TRANSFORMER
FOR TV WINDING HOT-SPOT TEMPERATURE
CT-T3 RATIO: 900:5

BUSHING CURRENT TRANSFORMER
MULTI-RATIO ACC. CLASS C-800
CT-1-6,10-18 TRF=2.0

CURRENT RATIO	TAP	CURRENT RATIO	TAP
100:5	X2-X3	600:5	X2-X4
200:5	X1-X2	800:5	X1-X4
300:5	X1-X3	900:5	X3-X5
400:5	X4-X5	1000:5	X2-X5
500:5	X3-X4	1200:5	X1-X5

BUSHING CURRENT TRANSFORMER
MULTI-RATIO ACC. CLASS C-800
CT-7,8,9 TRF=2.0

CURRENT RATIO	TAP	CURRENT RATIO	TAP
300:5	X3-X4	1200:5	X1-X3
400:5	X1-X2	1500:5	X1-X4
500:5	X4-X5	1600:5	X2-X5
800:5	X2-X3	2000:5	X1-X5
1100:5	X2-X4		

BUSHING CURRENT TRANSFORMER
MULTI-RATIO ACC. CLASS C-400
CT-19-30 TRF=2.0

CURRENT RATIO	TAP	CURRENT RATIO	TAP
300:5	X3-X4	1200:5	X1-X3
400:5	X1-X2	1500:5	X1-X4
500:5	X4-X5	1600:5	X2-X5
800:5	X2-X3	2000:5	X1-X5
1100:5	X2-X4		

WIRING DIAGRAM SYMBOLS :

- TERMINAL, CONTROL CABINET
- TERMINAL, POWER BLOCK
- TERMINAL, NITROGEN CABINET
- TERMINAL, LTC MECHANISM
- TERMINAL, LTC AUTOMATIC CONTROL
- TERMINAL, SPR SEAL-IN PANEL
- JUMPER
- WIRING TERMINATION ID
- WIRE COLOR CODE (BK,R,..etc.)
- LIGHT COLOR CODE (BS,WS)
- P.T AND C.T POLARITY

THIS DRAWING WAS CREATED FROM DELTA STAR DRAWING F843450, SHEET 1, REV. 1.

P:\04\233\00\DWG\RECORD\WRCCAD\WRC-E-331B.DWG

DGR ENGINEERING
ROCK RAPIDS, IOWA
(712) 472-2531

DATE	DRAWN BY	NO.	APPROVED BY	REVISION DESCRIPTION
06-20	KLV	1	PJK	CONFORMING TO CONSTRUCTION RECORDS
2-2020	SMW	0	PJK	FOR CONSTRUCTION

BLACK HILLS ENERGY

WEST RAPID CITY SUBSTATION
WIRING DIAGRAM
XFMR T1 BCT'S

DRAWN BY SMW DATE 1-2020
APPROVED BY PJK DATE 1-2020
DWG NO. WRC-E-331B REVISION 1

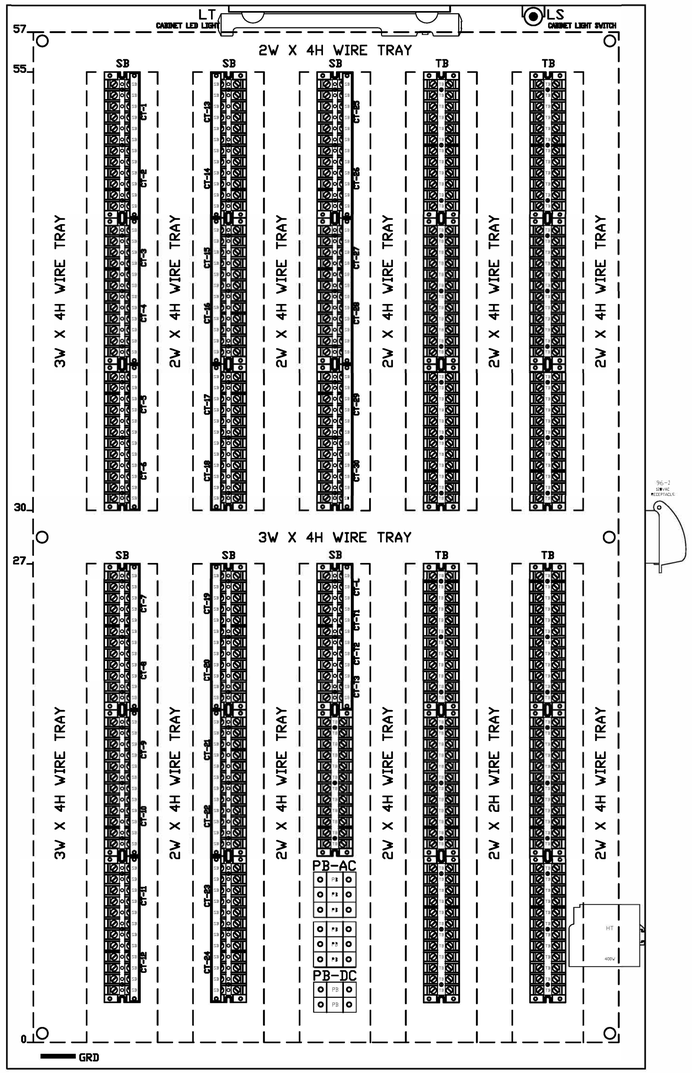

CONTROL CABINET BACK PANEL LAYOUT (FRONT VIEW)

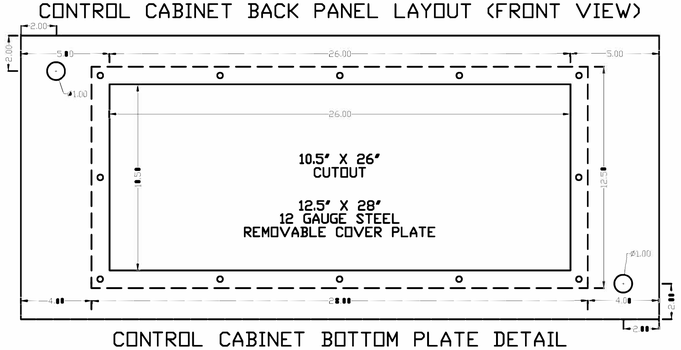

CONTROL CABINET BOTTOM PLATE DETAIL

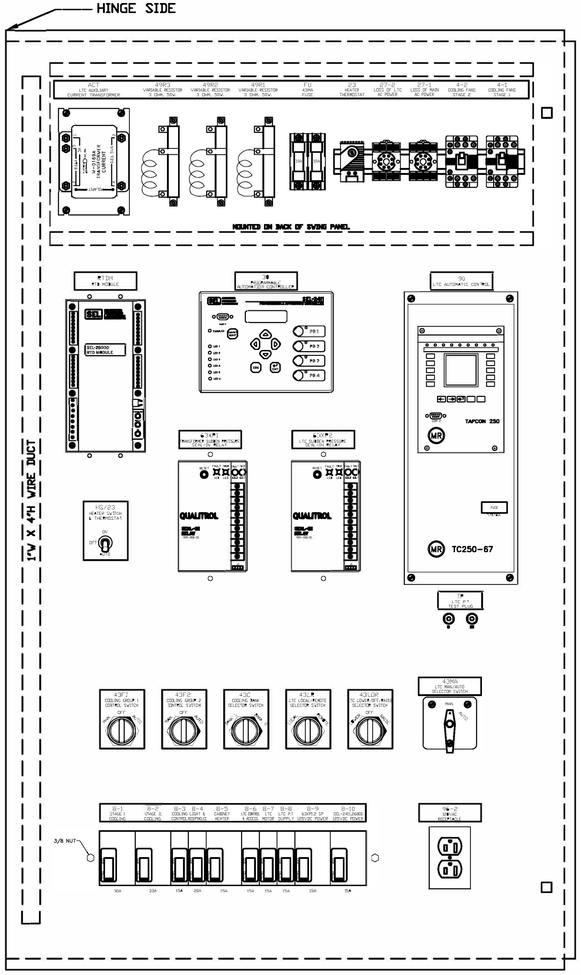

SWING PANEL (FRONT VIEW)

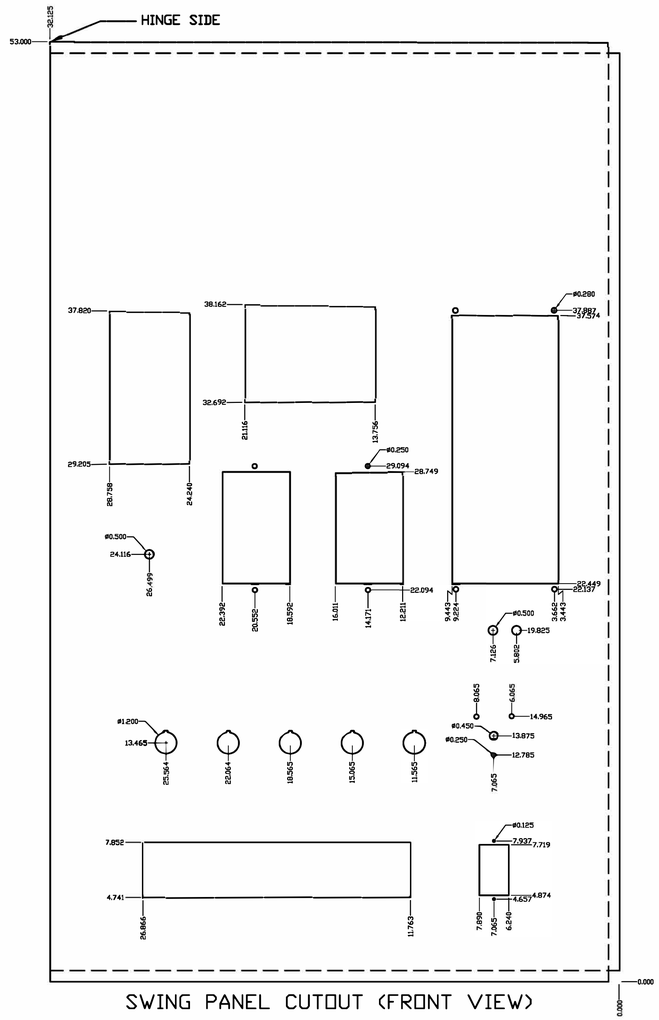

SWING PANEL CUTOUT (FRONT VIEW)

NOTES

1. RTDM, & 63XP1,2 TERMINALS SPACED AND WIRED BEHIND SWING PANEL SURFACE.
2. COVER PLATE BOLTED AND SEALED SO IT IS REMOVABLE FROM INSIDE OF CABINET.

THIS DRAWING WAS CREATED FROM DELTA STAR DRAWING F843455, REV. 0.

DATE	DRAWN BY	NO.	APPROVED BY	REVISION DESCRIPTION
06-20	KLV	1	PJK	CONFORMING TO CONSTRUCTION RECORDS
2-2020	SMW	0	PJK	FOR CONSTRUCTION

BLACK HILLS ENERGY

WEST RAPID CITY SUBSTATION

WIRING DIAGRAM

XFMR T1 CONTROL CABINET LAYOUT

DRAWN BY SMW DATE 1-2020 | APPROVED BY PJK DATE 1-2020 | DWG NO. WRC-E-331C | REVISION 1

DGR ENGINEERING
ROCK RAPIDS, IOWA
(712) 472-2531

P:\04023\00\DWG\RECORD\WRC\CAD\WRC-E-331C.DWG

P:\04\233\00\DWG\RECORD\WRC\CAD\WRC-E-331D.DWG

NOTE : PROVIDE 1/8" MOUNTING HOLES.

LOAD-TAP-CHANGING AUTOTRANSFORMER

S/N: F8434		CLASS	ONAN/ONAF/ONAF	THREE PHASE 60 HERTZ
HV	900 KV BIL			230000GrdY/132791 VOLTS
LV	350 KV BIL			69000GrdY/39837 VOLTS
TV	150 KV BIL			13200 VOLTS
NEUTRAL	150 KV BIL			
CONTINUOUS TEMPERATURE RISE	65°C	HV / LV		90/120/150 MVA
	65°C	TV		12/16/20 MVA
IMPEDANCE	7.93 % AT			230000 - 69000 VOLTS AND 90 MVA
IMPEDANCE	21.00 % AT			230000 - 13200 VOLTS AND 90 MVA
IMPEDANCE	11.25 % AT			69000 - 13200 VOLTS AND 90 MVA
SOUND PRESSURE LEVEL	71 / 72 / 74 dBA			AT ONAN/ONAF1/ONAF2

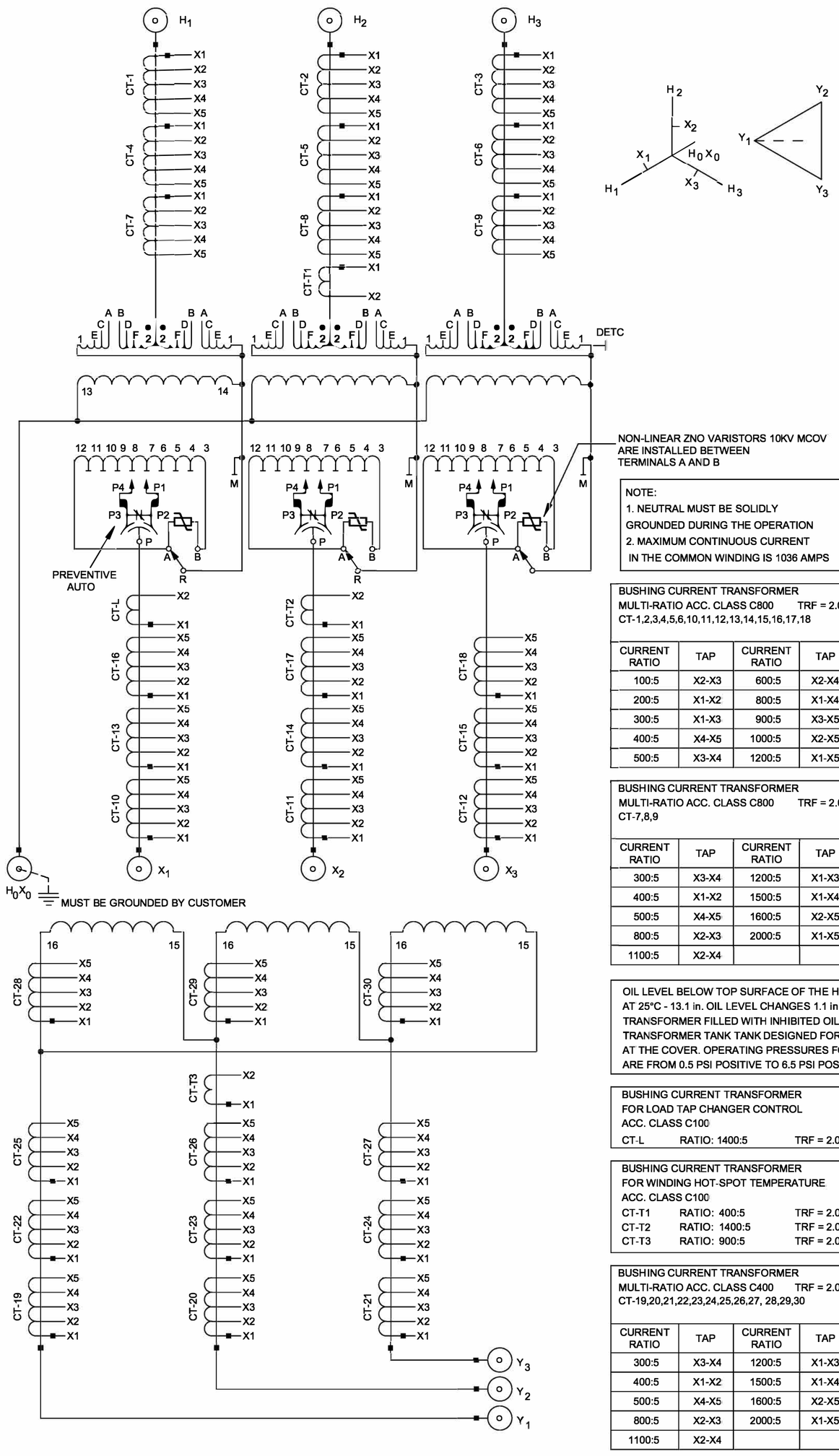

NON-LINEAR ZNO VARISTORS 10KV MCOV ARE INSTALLED BETWEEN TERMINALS A AND B

NOTE:
1. NEUTRAL MUST BE SOLIDLY GROUNDED DURING THE OPERATION
2. MAXIMUM CONTINUOUS CURRENT IN THE COMMON WINDING IS 1036 AMPS

BUSHING CURRENT TRANSFORMER
MULTI-RATIO ACC. CLASS C800 TRF = 2.0
CT-1,2,3,4,5,6,10,11,12,13,14,15,16,17,18

CURRENT RATIO	TAP	CURRENT RATIO	TAP
100:5	X2-X3	600:5	X2-X4
200:5	X1-X2	800:5	X1-X4
300:5	X1-X3	900:5	X3-X5
400:5	X4-X5	1000:5	X2-X5
500:5	X3-X4	1200:5	X1-X5

BUSHING CURRENT TRANSFORMER
MULTI-RATIO ACC. CLASS C800 TRF = 2.0
CT-7,8,9

CURRENT RATIO	TAP	CURRENT RATIO	TAP
300:5	X3-X4	1200:5	X1-X3
400:5	X1-X2	1500:5	X1-X4
500:5	X4-X5	1600:5	X2-X5
800:5	X2-X3	2000:5	X1-X5
1100:5	X2-X4		

BUSHING CURRENT TRANSFORMER
FOR LOAD TAP CHANGER CONTROL
ACC. CLASS C100
CT-L RATIO: 1400:5 TRF = 2.0

BUSHING CURRENT TRANSFORMER
FOR WINDING HOT-SPOT TEMPERATURE
ACC. CLASS C100
CT-T1 RATIO: 400:5 TRF = 2.0
CT-T2 RATIO: 1400:5 TRF = 2.0
CT-T3 RATIO: 900:5 TRF = 2.0

BUSHING CURRENT TRANSFORMER
MULTI-RATIO ACC. CLASS C400 TRF = 2.0
CT-19,20,21,22,23,24,25,26,27, 28,29,30

CURRENT RATIO	TAP	CURRENT RATIO	TAP
300:5	X3-X4	1200:5	X1-X3
400:5	X1-X2	1500:5	X1-X4
500:5	X4-X5	1600:5	X2-X5
800:5	X2-X3	2000:5	X1-X5
1100:5	X2-X4		

HIGH VOLTAGE

VOLTS L - L (H)	AMPS AT 150 MVA	HV DE-ENERGIZED TAP CHANGER (DETC) POSITION	CONNECTIONS
241500	359	1	A TO B
235750	367	2	B TO C
230000	377	3	C TO D
224250	386	4	D TO E
218500	396	5	E TO F

LOW VOLTAGE LOAD TAP-CHANGER
REINHAUSEN, RMV-II-1500

VOLTS L - L (X)	AMPS AT 150 MVA	POSITION		CONNECTIONS: REVERSING SWITCH R TO	P1 TO	P4 TO
75900	1141	RAISE	16	B	11	11
75470	1148		15		10	11
75040	1154		14		10	10
74605	1161		13		9	10
74175	1168		12		9	9
73745	1174		11		8	9
73315	1181		10		8	8
72880	1188		9		7	8
72450	1195		8		7	7
72020	1202		7		6	7
71590	1210		6		6	6
71155	1217		5		5	6
70725	1224		4		5	5
70295	1232		3		4	5
69865	1240		2		4	4
69430	1247		1		M	4
69000	1255	NEUTRAL			M	M
68570	1263	LOWER	1	A	11	M
68140	1271		2		11	11
67705	1279		3		10	11
67275	1287		4		10	10
66845	1296		5		9	10
66415	1304		6		9	9
65980	1313		7		8	9
65550	1321		8		8	8
65120	1330		9		7	8
64690	1339		10		7	7
64255	1348		11		6	7
63825	1357		12		6	6
63395	1366		13		5	6
62965	1375		14		5	5
62530	1385		15		4	5
62100	1395		16		4	4

FOR STEP DOWN OPERATION

OIL LEVEL BELOW TOP SURFACE OF THE HIGHEST POINT OF THE MANHOLE FLANGE AT 25°C - 13.1 in. OIL LEVEL CHANGES 1.1 in PER 10°C CHANGE IN OIL TEMPERATURE.
TRANSFORMER FILLED WITH INHIBITED OIL, TYPE II
TRANSFORMER TANK TANK DESIGNED FOR 14.7 PSI VACUUM FILLING.
AT THE COVER. OPERATING PRESSURES FOR AN INERT GAS PRESERVATION SYSTEM ARE FROM 0.5 PSI POSITIVE TO 6.5 PSI POSITIVE.

TV VOLTS L - L (Y)	AMPS AT 20 MVA
13200	875

(OIL VOLUMES @ 25°C)		APPROXIMATE WEIGHTS lbs
UNTANKING (CORE & COIL) *		137000
TANK & FITTINGS		80170
OIL - MAIN TANK	13290 gal	99675
OIL - RADIATORS	1275 gal	9565
OIL - LTC	345 gal	2590
OIL - TOTAL	14910 gal	111830
TOTAL		329000

* INCLUDES 8200 lbs PREVENTIVE AUTO

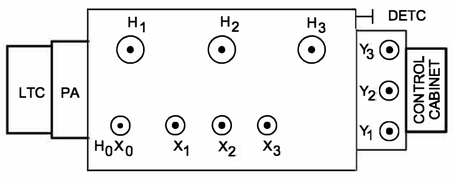

DATE OF MANUFACTURE: 12/2019

F843410
REVISION 0

DELTA STAR, INC.
SAN CARLOS OPERATION (650) 508-2850
270 INDUSTRIAL ROAD, SAN CARLOS, CA 94070 USA

BEFORE INSTALLING OR OPERATING, READ INSTRUCTIONS.
THE UNIT CONTAINS NO DETECTABLE LEVEL (LESS THAN 1 PPM) OF PCB AT THE TIME OF MANUFACTURE.

SERIAL NUMBER	MVA	VOLTAGE (KV)	IMPEDANCE (%)
F8434	90	230-69	7.93

NOTE: TRANSFORMER IS DESIGNED FOR A NOMINAL BETWEEN 8.18% IMPEDANCE ON A 60 MVA BASE AT 230KV-69KV CONNECTION WITH A ± 10.0% STANDARD TOLERANCE. EXACT IMPEDANCE VALUE TO BE ADDED AFTER FACTORY TESTING.

THIS DRAWING WAS CREATED FROM DELTA STAR DRAWING F843410, REV. 2.

NO.	DATE	DRAWN BY	APPROVED BY	REVISION DESCRIPTION
0	06-20	KLV	PDK	FOR CONSTRUCTION
1	2-2020	SMW	PDK	CONFORMING TO CONSTRUCTION RECORDS

BLACK HILLS ENERGY

WEST RAPID CITY SUBSTATION

NAMEPLATE
XFMR T1

DRAWN SMW 1-2020
APPROVED PDK 1-2020

DWG NO. WRC-E-331D

REVISION 1

ROCK RAPIDS, IOWA
(712) 472-2531

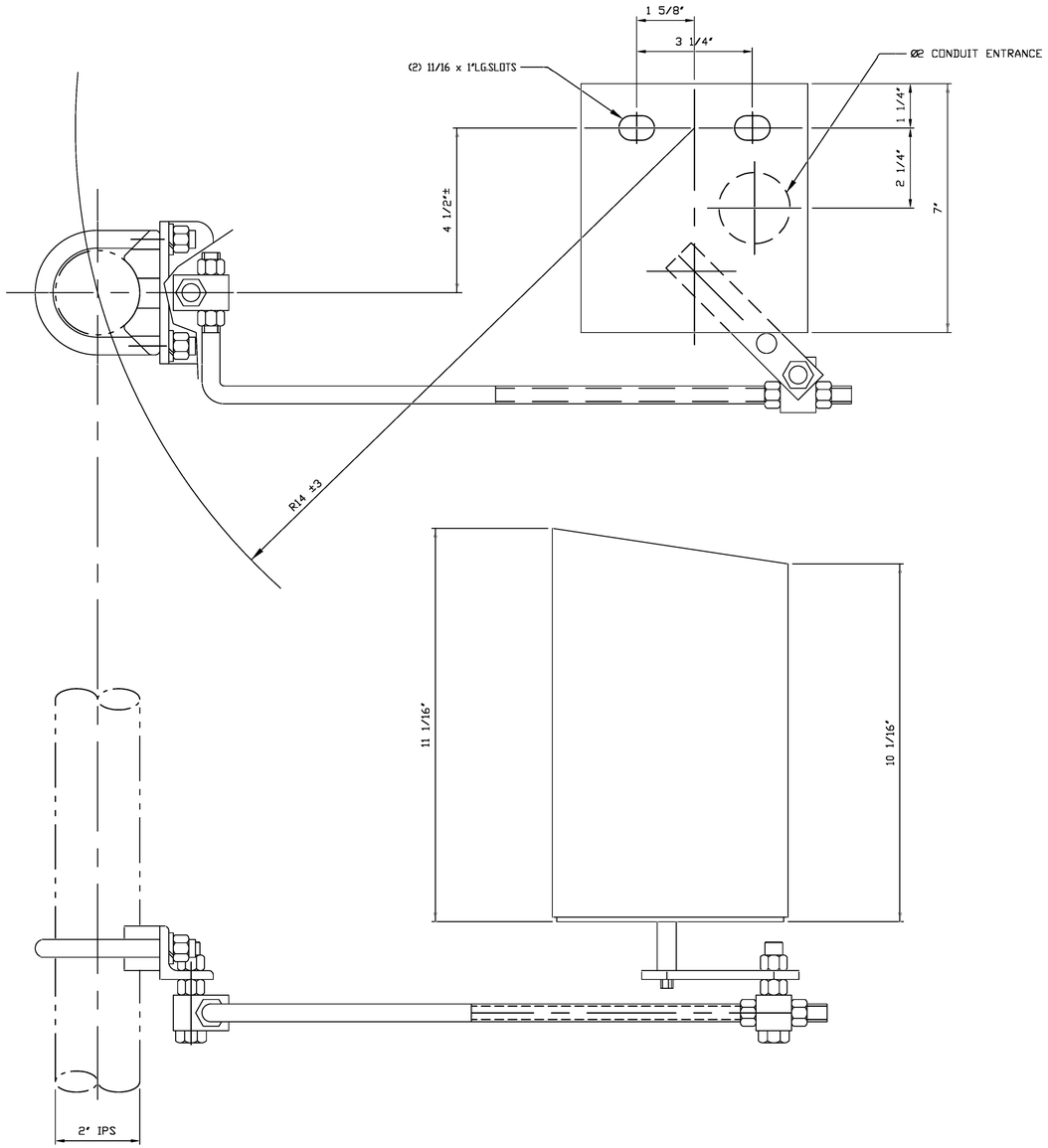

WEATHER PROOF HOUSING
1/8" THK.ALUM. COMPLETELY
ENCLOSED FROM MTG.BASE UP.

PHYSICAL AUX SWITCH DETAILS

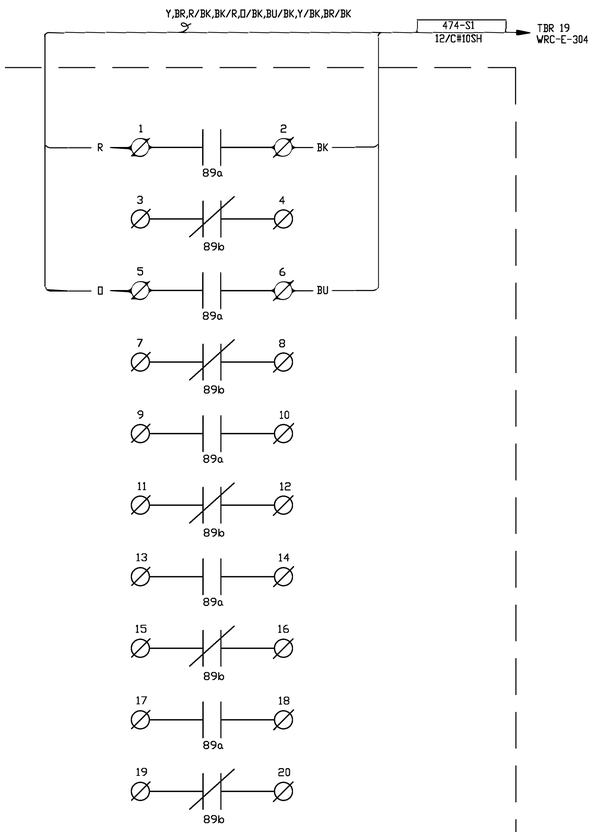

TYPICAL SCHEMATIC DIAGRAM

(STAGES ARE FIELD SET AS "a" OR "b" CONTACTS
AND ARE ADJUSTABLE IN 15° INCREMENTS)

WIRING

P:\04023\00\DWG\RECORD\WRC\CAD\WRC-E-341.DWG

DGR ENGINEERING
ROCK RAPIDS, IOWA
(712) 472-2531

DATE	DRAWN BY	NO.	APPROVED BY	REVISION DESCRIPTION
06-20	SMW	1	PDK	CONFORMING TO CONSTRUCTION RECORDS
10-19	SMW	0	PDK	FOR CONSTRUCTION

BLACK HILLS ENERGY

WEST RAPID CITY SUBSTATION

WIRING DIAGRAM
SW 23474

DRAWN BY MEL DATE 10-19
APPROVED BY PDK DATE 10-19

DWG NO. WRC-E-341 REVISION 1

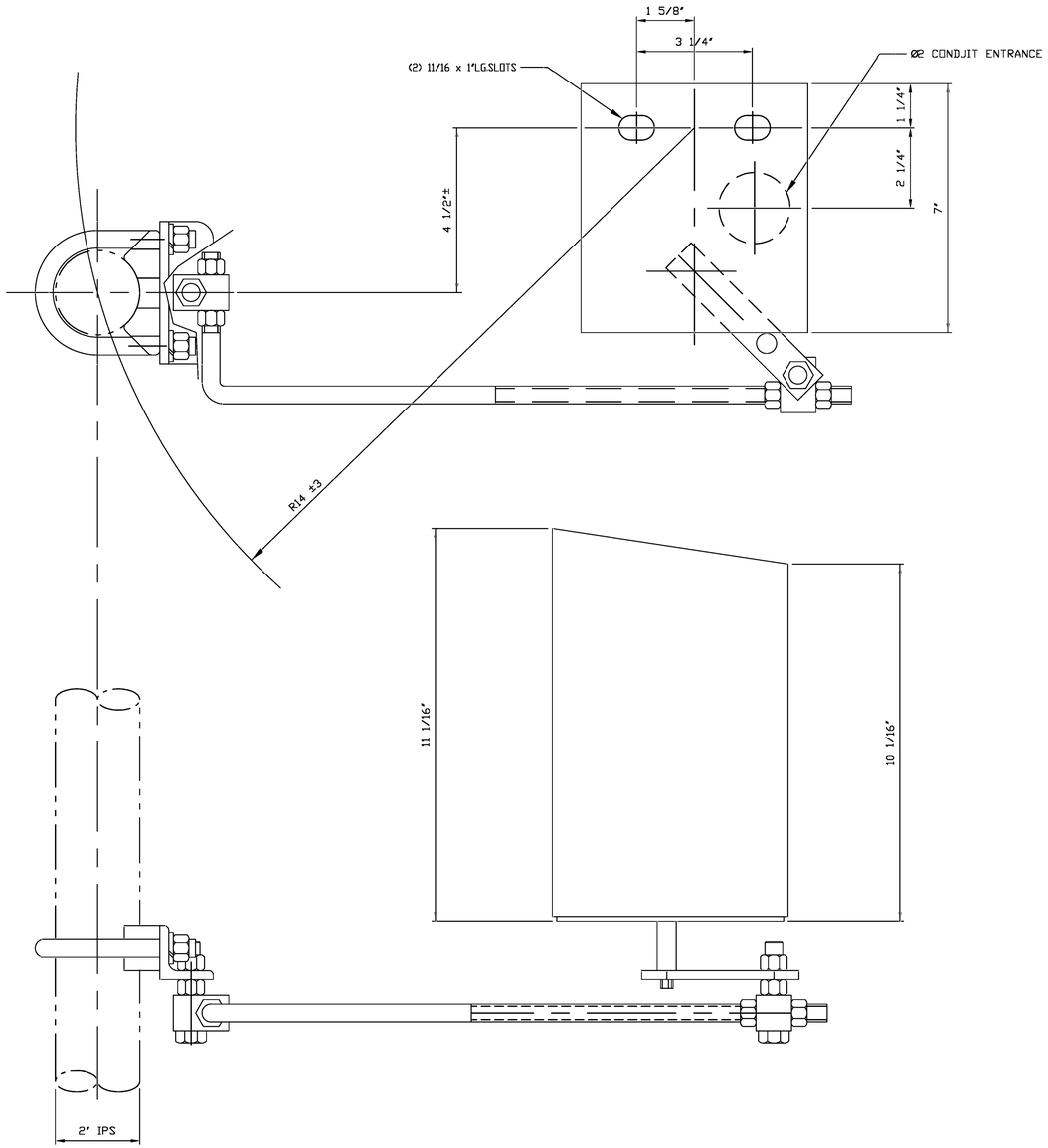

WEATHER PROOF HOUSING
1/8" THK.ALUM. COMPLETELY
ENCLOSED FROM MTG.BASE UP.

PHYSICAL AUX SWITCH DETAILS

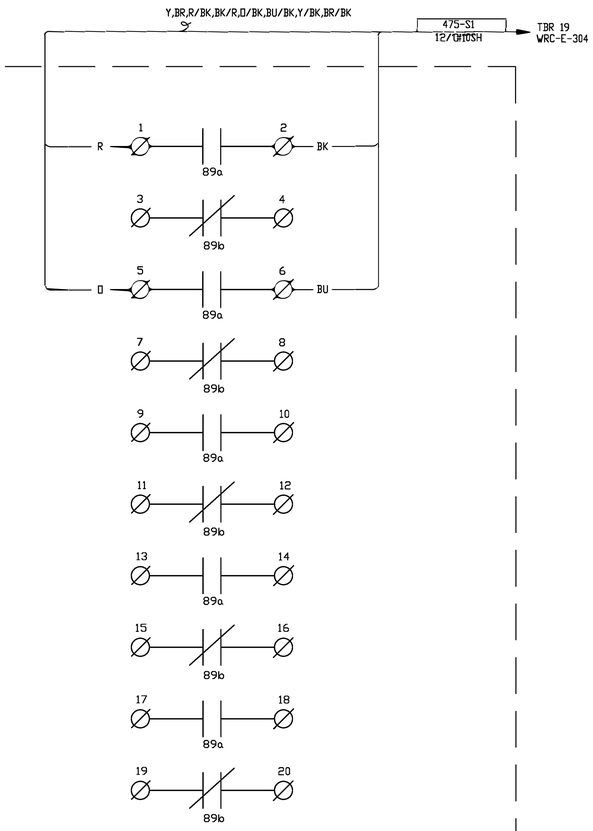

TYPICAL SCHEMATIC DIAGRAM

(STAGES ARE FIELD SET AS "a" OR "b" CONTACTS
AND ARE ADJUSTABLE IN 15° INCREMENTS)

WIRING

P:\04023\00\DWG\RECORD\WRC\CAD\WRC-E-342.DWG

DGR ENGINEERING
ROCK RAPIDS, IOWA
(712) 472-2531

DATE	DRAWN BY	NO.	APPROVED BY	REVISION DESCRIPTION
06-20	SMW	1	PDK	CONFORMING TO CONSTRUCTION RECORDS
10-19	MEL	0	PDK	FOR CONSTRUCTION

BLACK HILLS ENERGY

WEST RAPID CITY SUBSTATION

WIRING DIAGRAM
SW 23475

DRAWN BY MEL DATE 10-19
APPROVED BY PDK DATE 10-19

DWG NO. WRC-E-342 REVISION 1

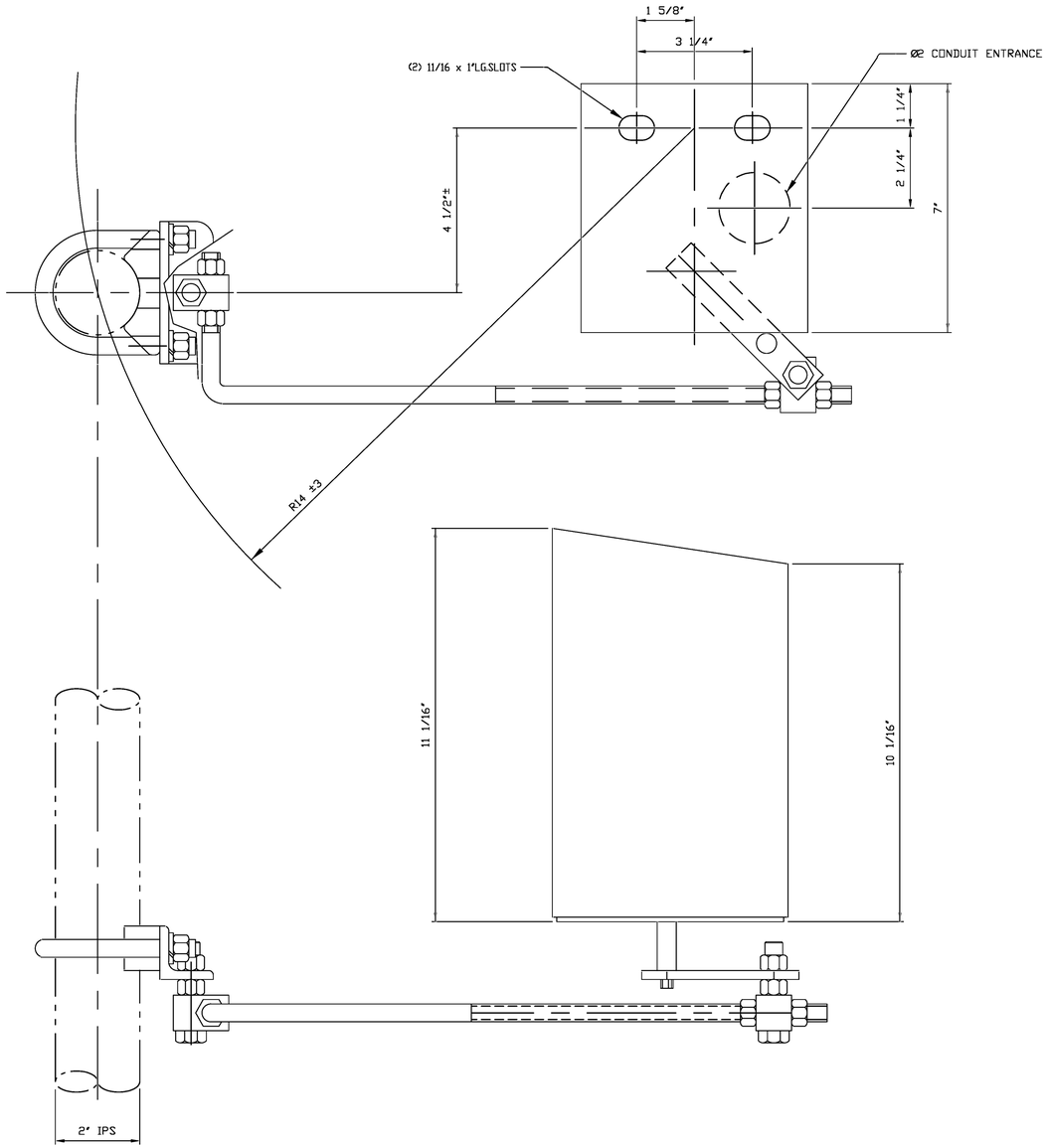

WEATHER PROOF HOUSING
1/8" THK.ALUM. COMPLETELY
ENCLOSED FROM MTG.BASE UP.

PHYSICAL AUX SWITCH DETAILS

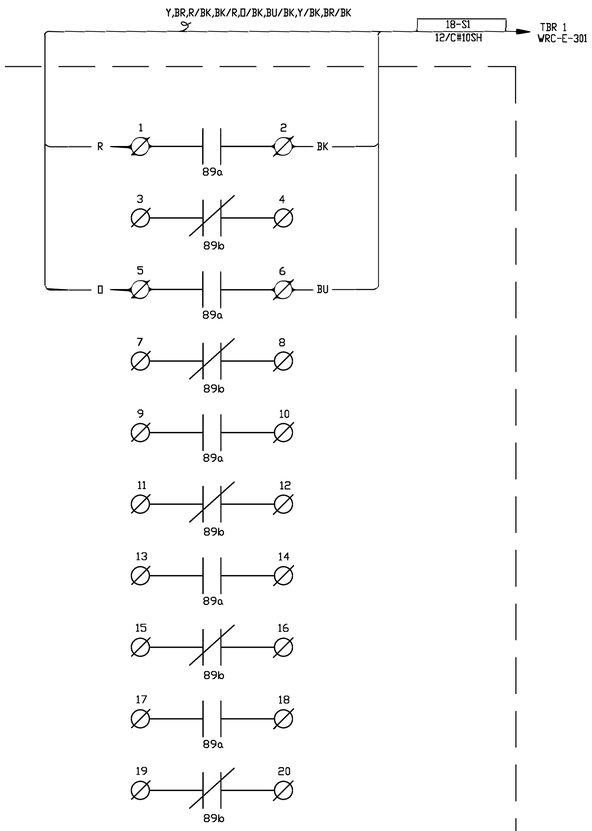

TYPICAL SCHEMATIC DIAGRAM

(STAGES ARE FIELD SET AS "a" OR "b" CONTACTS
AND ARE ADJUSTABLE IN 15° INCREMENTS)

WIRING

P:\04023\00\DWG\RECORD\WRC\CAD\WRC-E-343.DWG

DGR ENGINEERING
ROCK RAPIDS, IOWA
(712) 472-2531

DATE	DRAWN BY	NO.	APPROVED BY	REVISION DESCRIPTION
06-20	SMW	1	PDK	CONFORMING TO CONSTRUCTION RECORDS
10-19	MEL	0	PDK	FOR CONSTRUCTION

BLACK HILLS ENERGY

WEST RAPID CITY SUBSTATION

WIRING DIAGRAM
SW 6WR18

DRAWN BY MEL DATE 10-19
APPROVED BY PDK DATE 10-19

DWG NO. WRC-E-343 REVISION 1

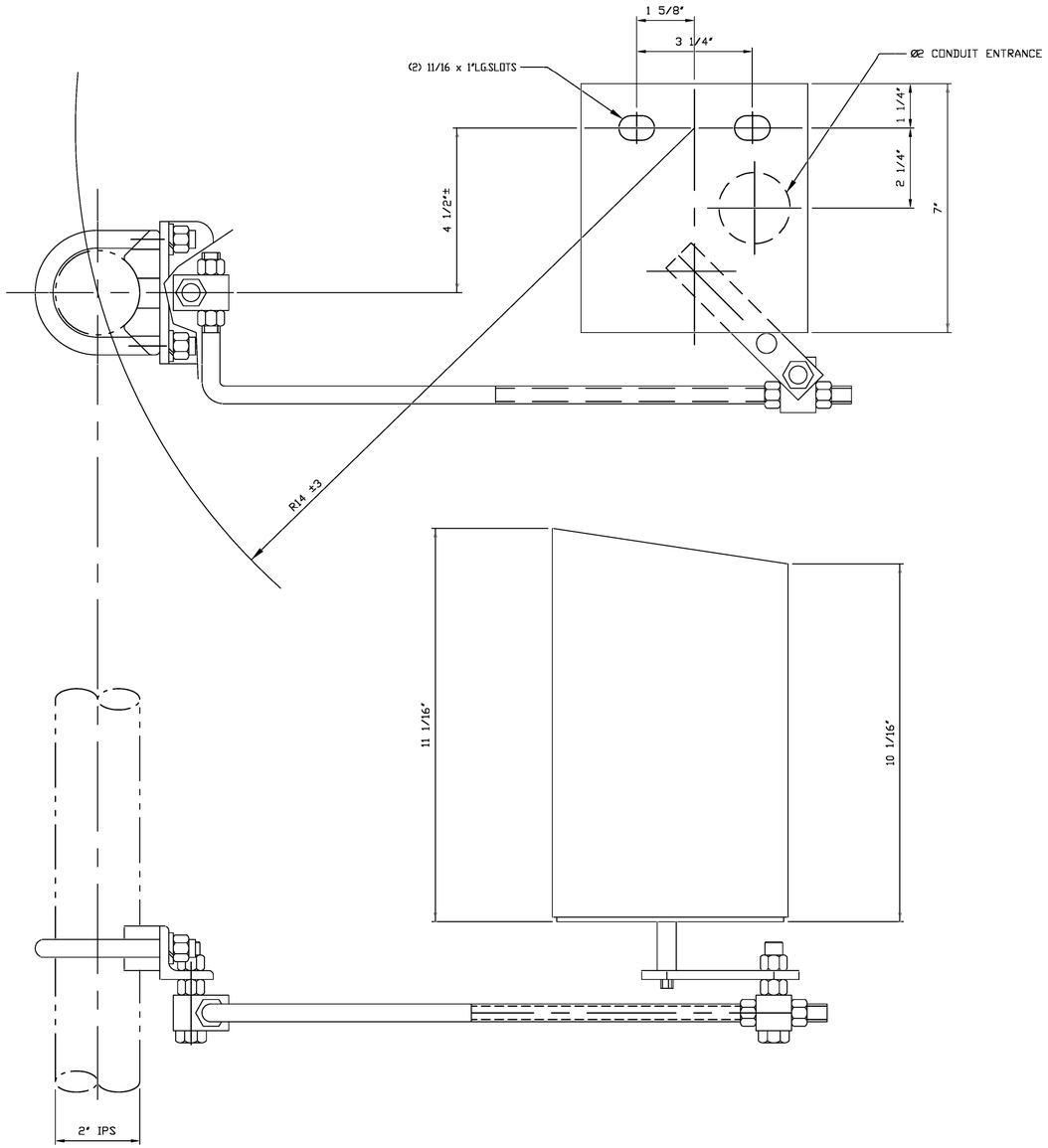

WEATHER PROOF HOUSING
1/8" THK.ALUM. COMPLETELY
ENCLOSED FROM MTG.BASE UP.

PHYSICAL AUX SWITCH DETAILS

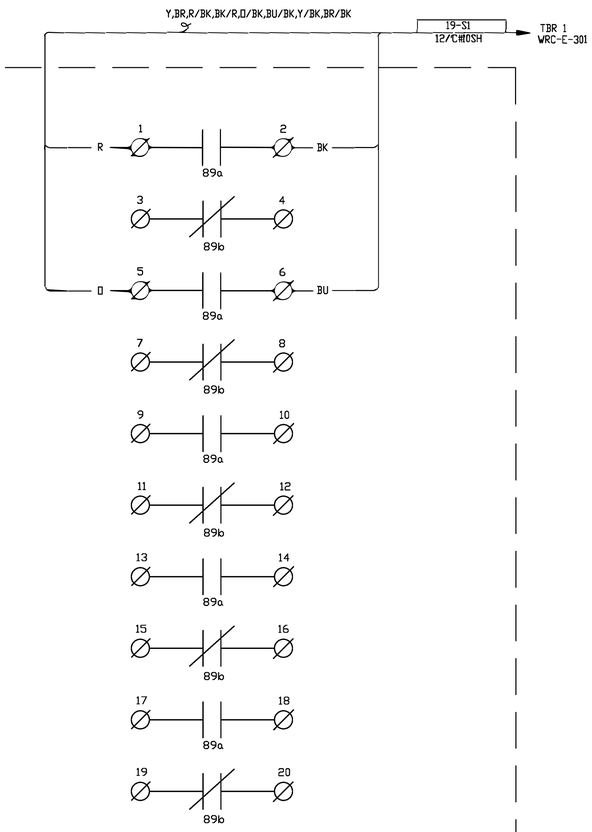

TYPICAL SCHEMATIC DIAGRAM

(STAGES ARE FIELD SET AS "a" OR "b" CONTACTS
AND ARE ADJUSTABLE IN 15° INCREMENTS)

WIRING

P:\04023\00\DWG\RECORD\WRC\CAD\WRC-E-344.DWG

DGR ENGINEERING
ROCK RAPIDS, IOWA
(712) 472-2531

DATE	DRAWN BY	NO.	APPROVED BY	REVISION DESCRIPTION
06-20	SMW	1	PDK	CONFORMING TO CONSTRUCTION RECORDS
10-19	MEL	0	PDK	FOR CONSTRUCTION

BLACK HILLS ENERGY

WEST RAPID CITY SUBSTATION

WIRING DIAGRAM
SW 6WR19

DRAWN BY MEL DATE 10-19
APPROVED BY PDK DATE 10-19

DWG NO. WRC-E-344 REVISION 1

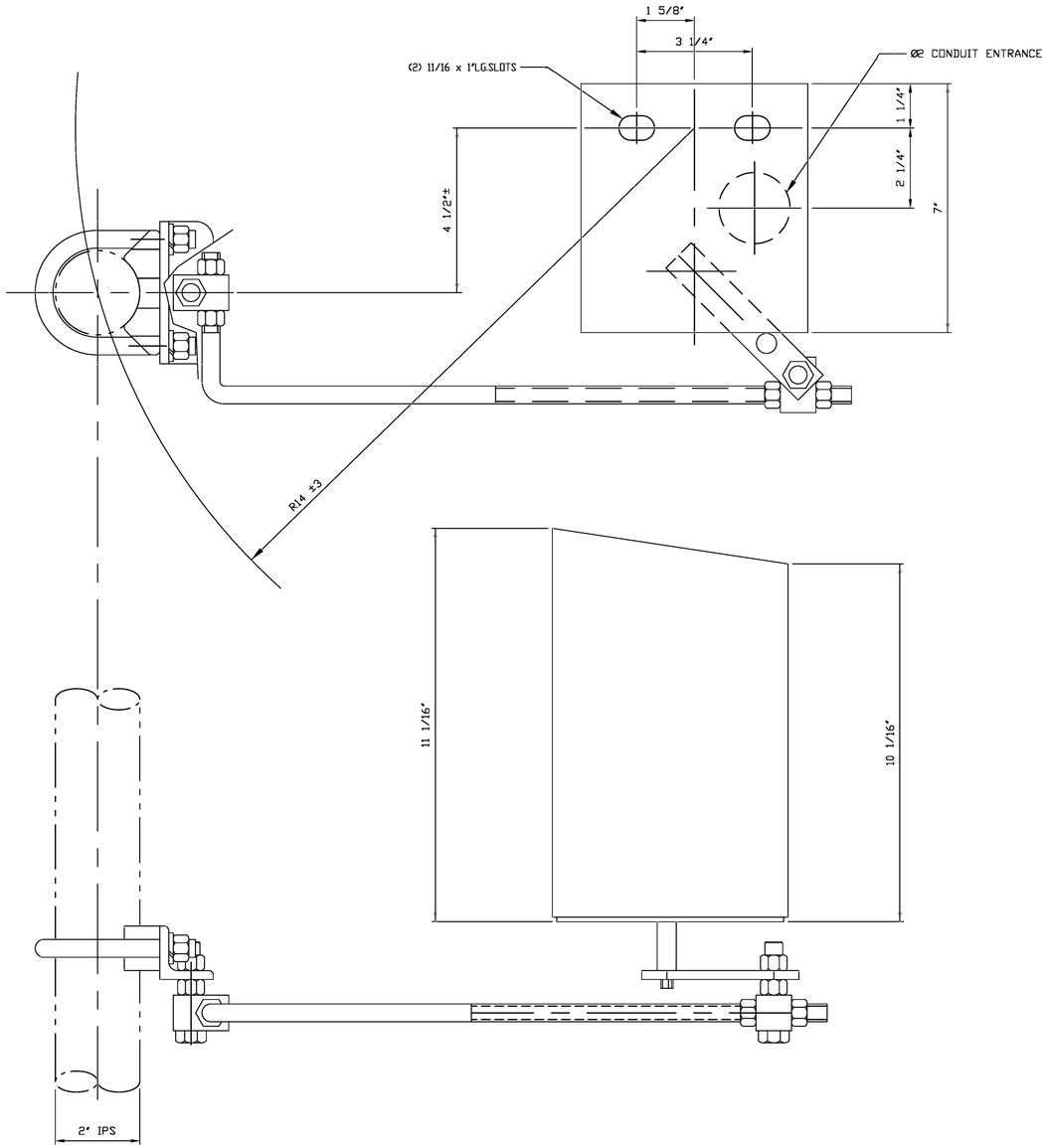

WEATHER PROOF HOUSING
1/8" THK.ALUM. COMPLETELY
ENCLOSED FROM MTG.BASE UP.

PHYSICAL AUX SWITCH DETAILS

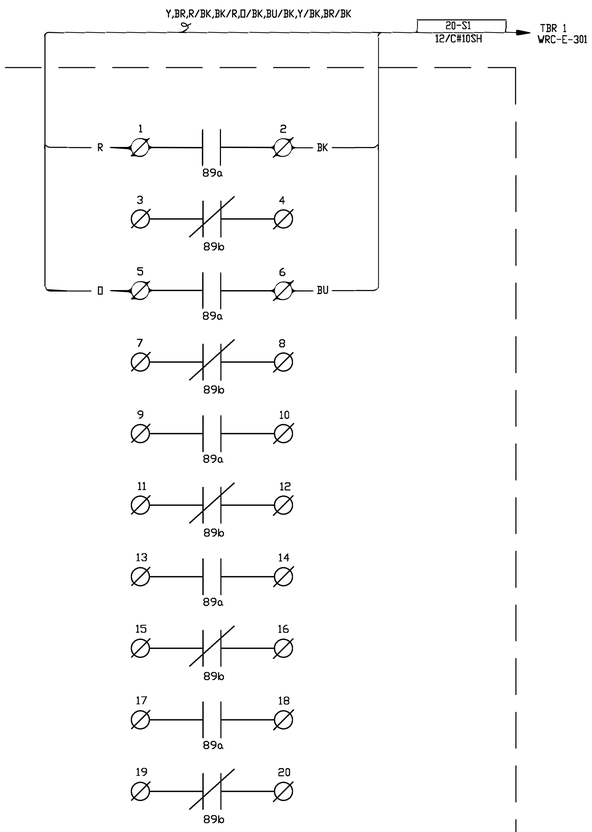

TYPICAL SCHEMATIC DIAGRAM

(STAGES ARE FIELD SET AS "a" OR "b" CONTACTS
AND ARE ADJUSTABLE IN 15° INCREMENTS)

WIRING

P:\04023\00\DWG\RECORD\WRC\CAD\WRC-E-345.DWG

DGR ENGINEERING
ROCK RAPIDS, IOWA
(712) 472-2531

DATE	DRAWN BY	NO.	APPROVED BY	REVISION DESCRIPTION
06-20	SMW	1	PDK	CONFORMING TO CONSTRUCTION RECORDS
10-19	MEL	0	PDK	FOR CONSTRUCTION

BLACK HILLS ENERGY

WEST RAPID CITY SUBSTATION

WIRING DIAGRAM
SW 6WR20

DRAWN BY MEL DATE 10-19
APPROVED BY PDK DATE 10-19

DWG NO. WRC-E-345 REVISION 1

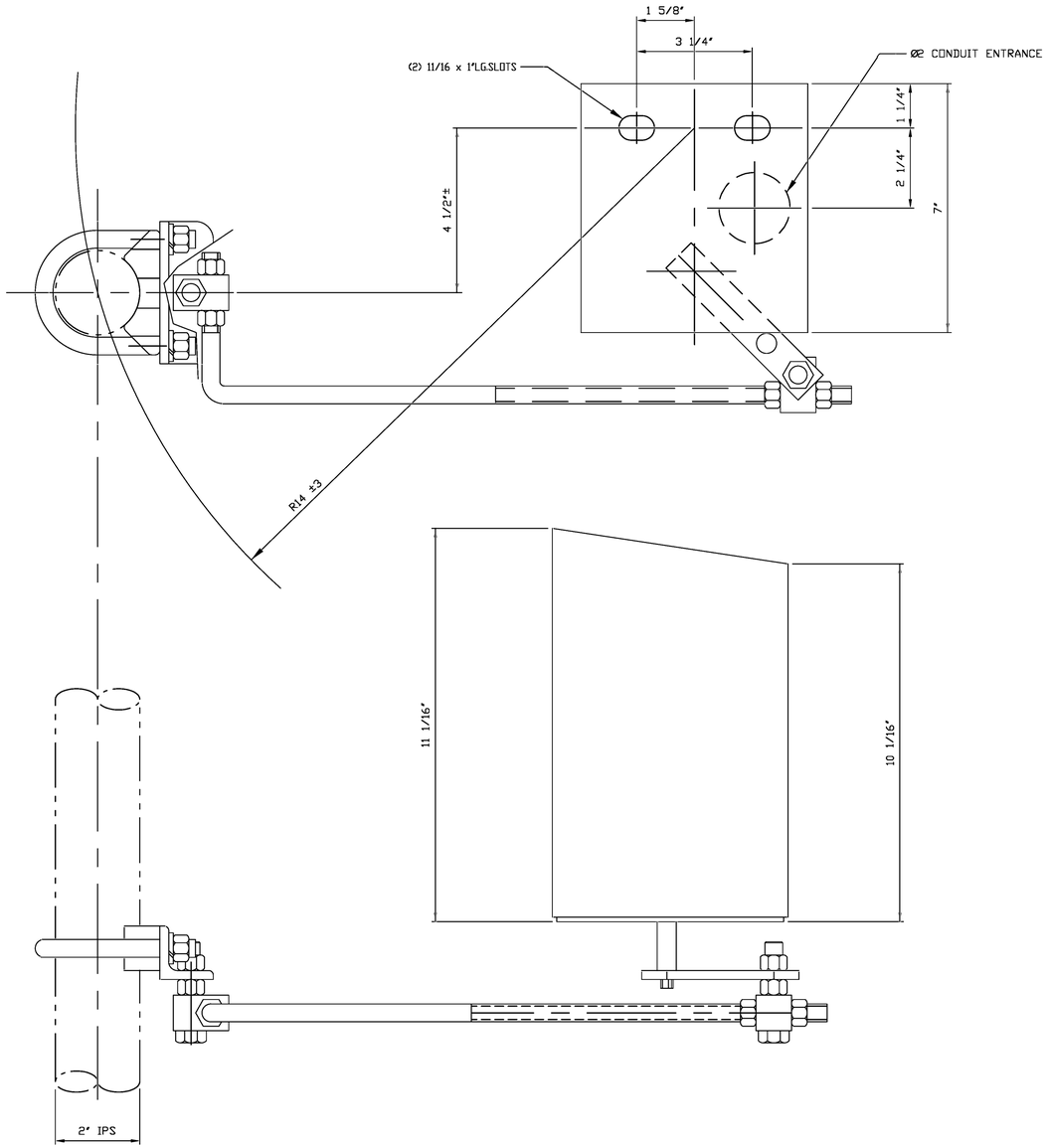

WEATHER PROOF HOUSING
1/8" THK.ALUM. COMPLETELY
ENCLOSED FROM MTG.BASE UP.

PHYSICAL AUX SWITCH DETAILS

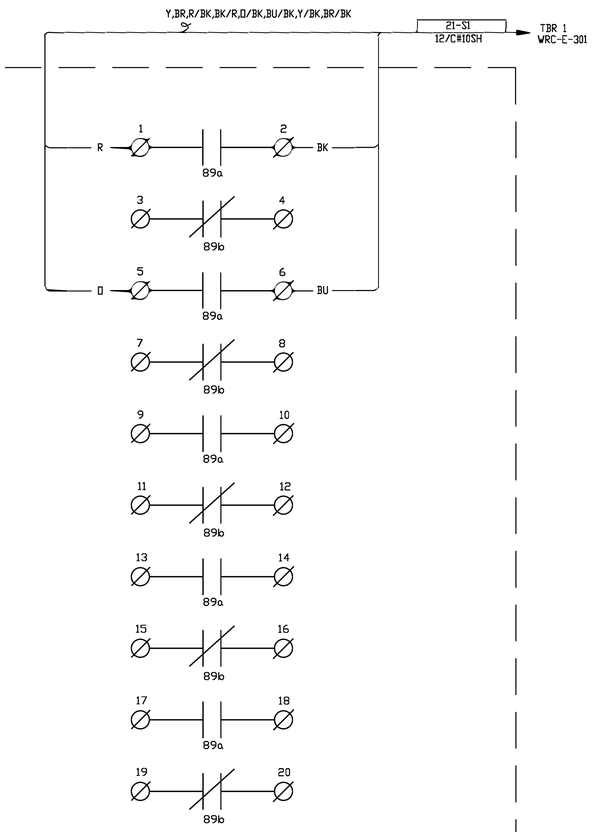

TYPICAL SCHEMATIC DIAGRAM

(STAGES ARE FIELD SET AS "a" OR "b" CONTACTS
AND ARE ADJUSTABLE IN 15° INCREMENTS)

WIRING

P:\04023\00\DWG\RECORD\WRC\CAD\WRC-E-346.DWG

DGR ENGINEERING
ROCK RAPIDS, IOWA
(712) 472-2531

DATE	DRAWN BY	NO.	APPROVED BY	REVISION DESCRIPTION
06-20	SMW	1	PDK	CONFORMING TO CONSTRUCTION RECORDS
10-19	MEL	0	PDK	FOR CONSTRUCTION

BLACK HILLS ENERGY

WEST RAPID CITY SUBSTATION

WIRING DIAGRAM
SW 6WR21

DRAWN BY MEL DATE 10-19
APPROVED BY PDK DATE 10-19

DWG NO. WRC-E-346 REVISION 1

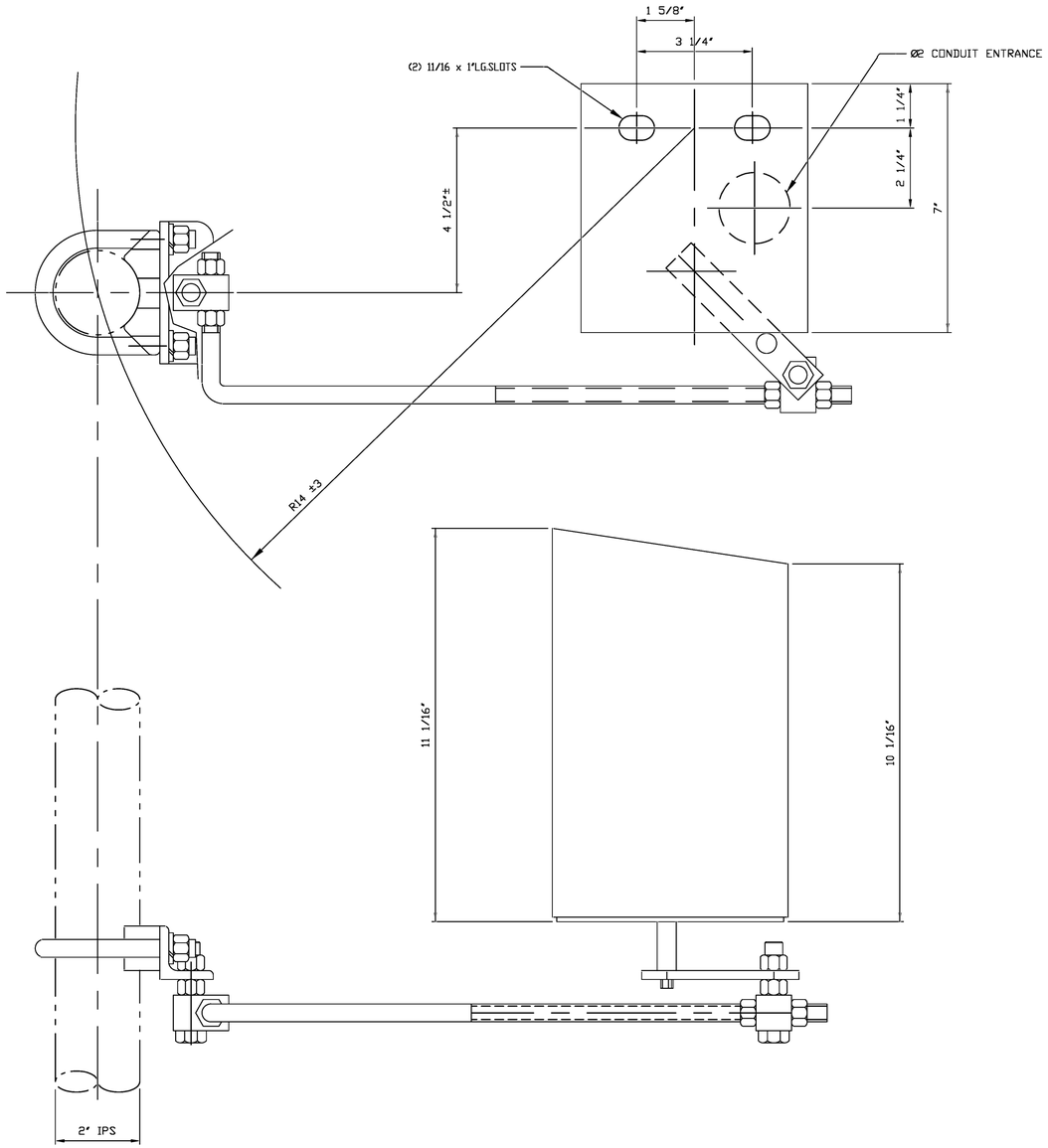

WEATHER PROOF HOUSING
1/8" THK.ALUM. COMPLETELY
ENCLOSED FROM MTG.BASE UP.

PHYSICAL AUX SWITCH DETAILS

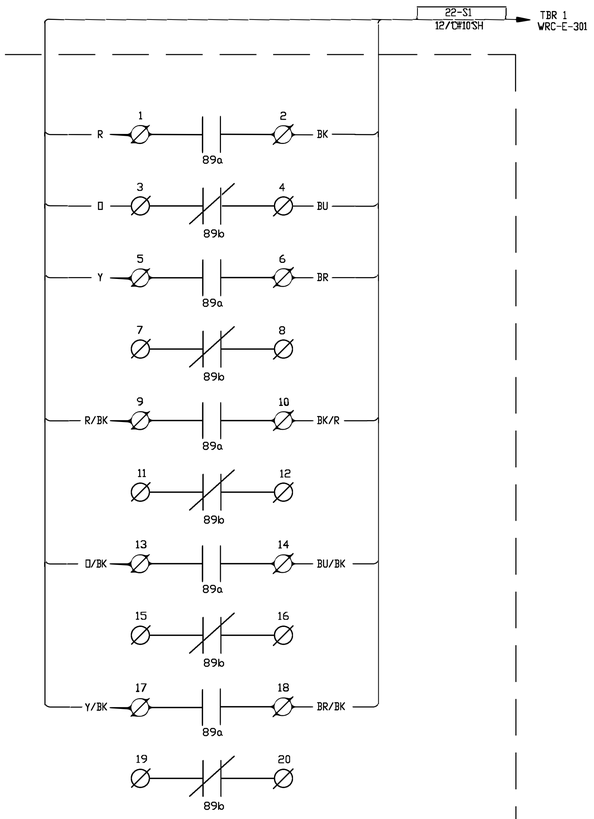

TYPICAL SCHEMATIC DIAGRAM

(STAGES ARE FIELD SET AS "a" OR "b" CONTACTS
AND ARE ADJUSTABLE IN 15° INCREMENTS)

WIRING

P:\04023\00\DWG\RECORD\WRC\CAD\WRC-E-347.DWG

DGR ENGINEERING
ROCK RAPIDS, IOWA
(712) 472-2531

DATE	DRAWN BY	NO.	APPROVED BY	REVISION DESCRIPTION
06-20	SMW	1	PDK	CONFORMING TO CONSTRUCTION RECORDS
10-19	MEL	0	PDK	FOR CONSTRUCTION

BLACK HILLS ENERGY

WEST RAPID CITY SUBSTATION

WIRING DIAGRAM
SW 6WR22

DRAWN BY MEL DATE 10-19
APPROVED BY PDK DATE 10-19

DWG NO. WRC-E-347 REVISION 1

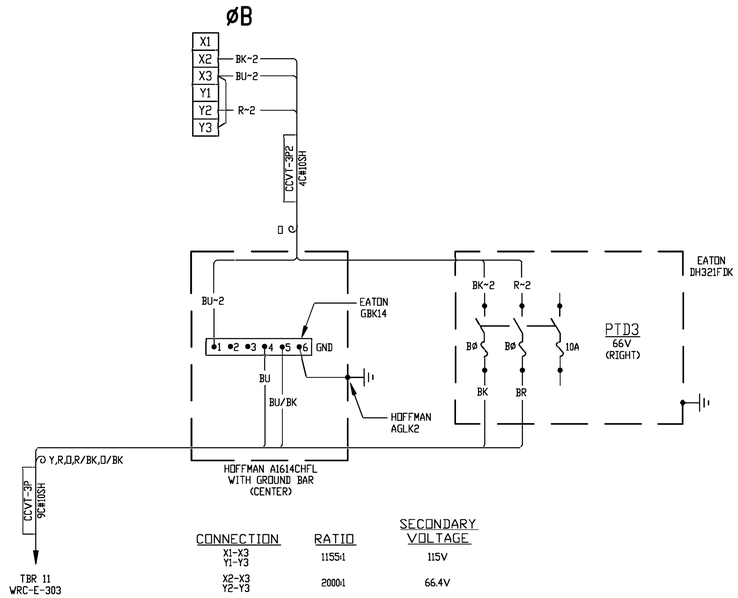

CCVT-T1 – 230 kV BUS T1 CVT (P3)

P:\040239\00\DWGRECORD\WRC\CAD\WRC-E-350.DWG

DGR ENGINEERING
ROCK RAPIDS, IOWA
(712) 472-2531

06-20	SMW	1	PDK	CONFORMING TO CONSTRUCTION RECORDS
10-19	SMW	0	PDK	FOR CONSTRUCTION
DATE	DRAWN BY	NO.	APPROVED BY	REVISION DESCRIPTION

BLACK HILLS ENERGY

WEST RAPID CITY SUBSTATION

WIRING DIAGRAM

230 kV BUS CVT'S

DRAWN BY SMW DATE 6-19

APPROVED BY PDK DATE 6-19

DWG NO. WRC-E-350

REVISION 1

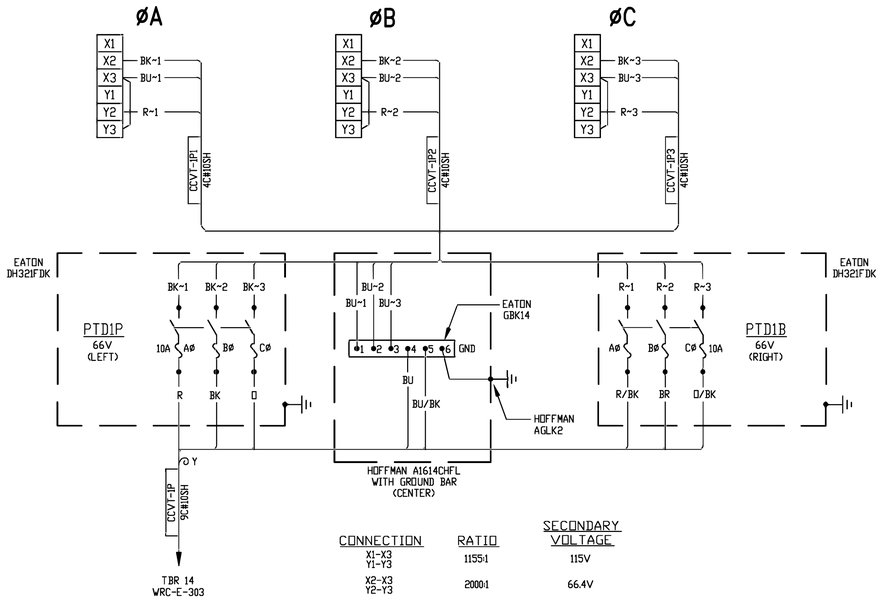

CCVT-LNG – 230 kV LANGE LINE CVT'S (P1)

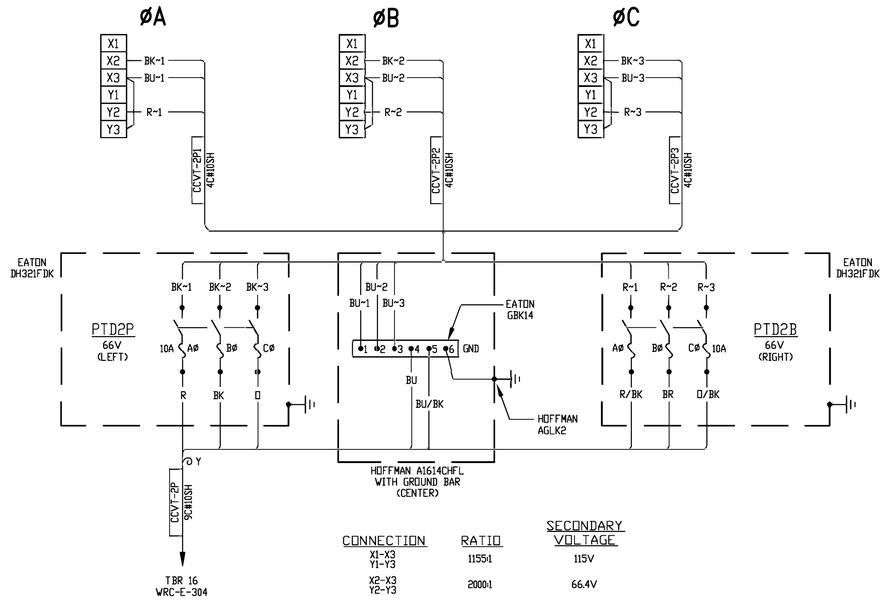

CCVT-SRC – 230 kV SOUTH RAPID CITY LINE CVT'S (P2)

P:\04233\00\DWG\RECORD\WRCC\CAD\WRC-E-351.DWG

DGR ENGINEERING
ROCK RAPIDS, IOWA
(712) 472-2531

DATE	DRAWN BY	NO.	APPROVED BY	REVISION DESCRIPTION
06-20	SMW	1	PDK	CONFORMING TO CONSTRUCTION RECORDS
10-19	SMW	0	PDK	FOR CONSTRUCTION

BLACK HILLS ENERGY

WEST RAPID CITY SUBSTATION

WIRING DIAGRAM
230 kV LINE CVT'S

DRAWN BY SMW DATE 6-19
APPROVED BY PDK DATE 6-19

DWG NO. WRC-E-351

REVISION 1

(PPT METERING WINDING)

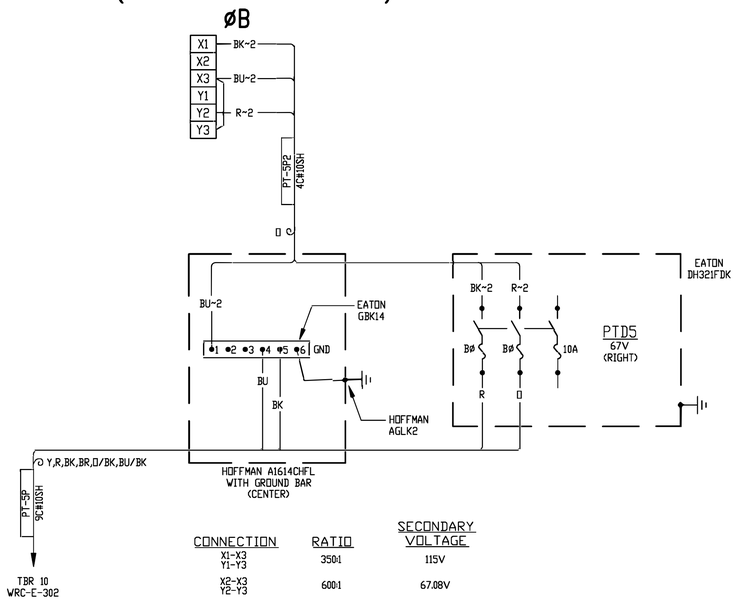

CONNECTION	RATIO	SECONDARY VOLTAGE
X1-X3 Y1-Y3	350:1	115V
X2-X3 Y2-Y3	600:1	67.08V

PT-B1 – 69 kV BUS 1 PT (P5)

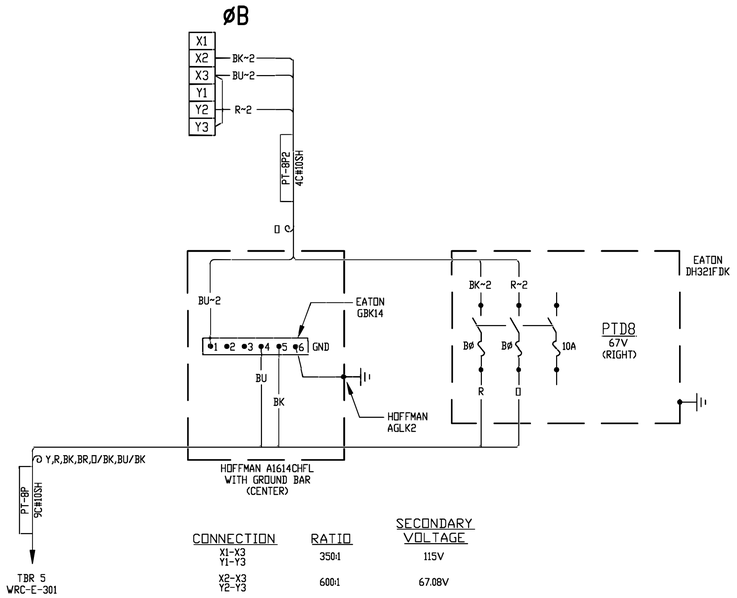

CONNECTION	RATIO	SECONDARY VOLTAGE
X1-X3 Y1-Y3	350:1	115V
X2-X3 Y2-Y3	600:1	67.08V

PT-B2 – 69 kV BUS 2 PT (P8)

P:\04233\00\DWG\RECORD\WRCC\ADI\WRC-E-352.DWG

DGR ENGINEERING
ROCK RAPIDS, IOWA
(712) 472-2531

DATE	DRAWN BY	NO.	APPROVED BY	REVISION DESCRIPTION
06-20	KLV	1	PJK	CONFORMING TO CONSTRUCTION RECORDS
10-19	SMW	0	PJK	F ☒ CONSTRUCTION

BLACK HILLS ENERGY

WEST RAPID CITY SUBSTATION

WIRING DIAGRAM

69 kV BUS PT'S

DRAWN BY SMW DATE 6-19

APPROVED BY PJK DATE 6-19

DWG NO. WRC-E-352 REVISION NO. 1

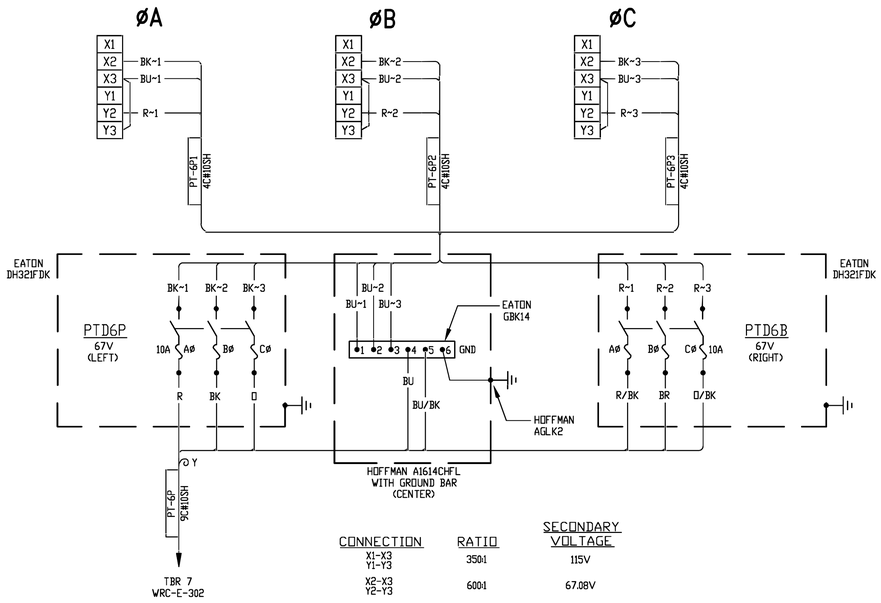

PT-CT4 – 69 kV CT4 LINE PT'S (P6)

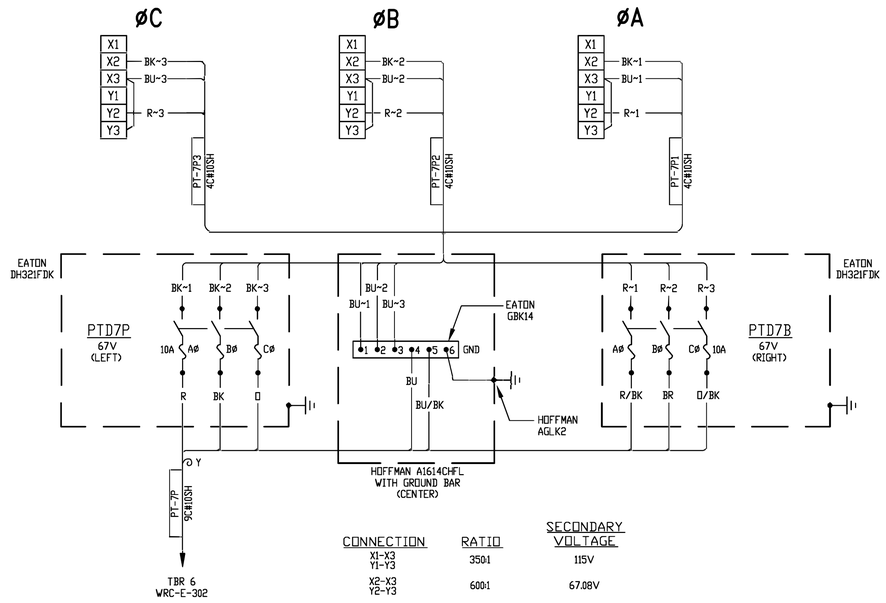

PT-LNG69 – 69 kV LANGE LINE PT'S (P7)

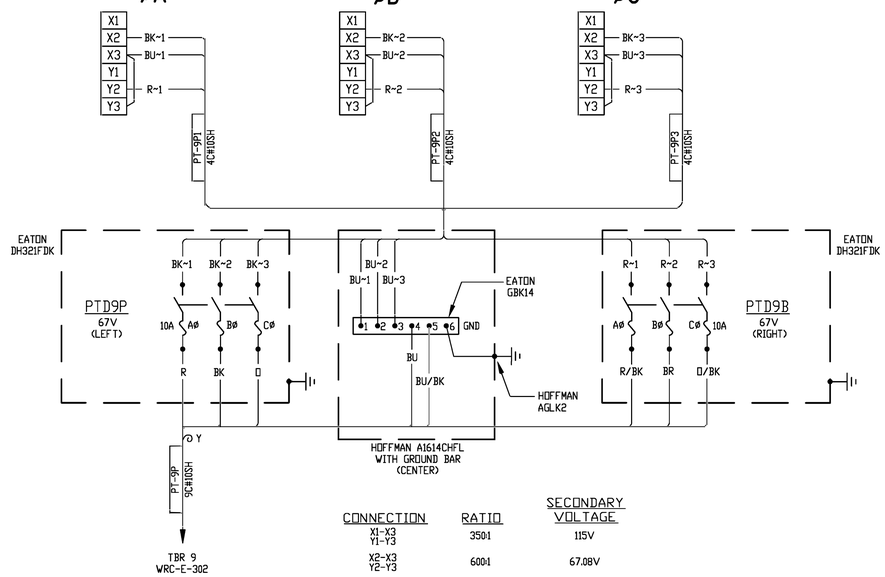

PT-BF2 – 69 kV BEN FRENCH LINE 2 PT'S (P9)

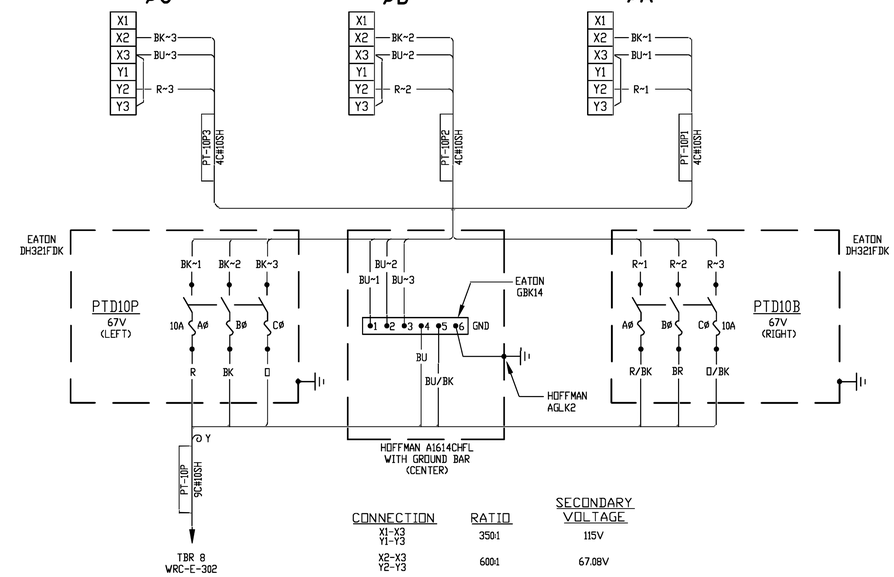

PT-BF1 – 69 kV BEN FRENCH LINE 1 PT'S (P10)

P:\04233\00\DWG\RECORD\WRC\CAD\WRC-E-353.DWG

DGR ENGINEERING
ROCK RAPIDS, IOWA
(712) 472-2531

DATE	DRAWN BY	NO.	APPROVED BY	REVISION DESCRIPTION
06-20	SMW	1	PDK	CONFORMING TO CONSTRUCTION RECORDS
10-19	SMW	0	PDK	FOR CONSTRUCTION

BLACK HILLS ENERGY

WEST RAPID CITY SUBSTATION

WIRING DIAGRAM

69 kV LINE PT'S

DRAWN BY SMW DATE 6-19

APPROVED BY PDK DATE 6-19

DWG NO. WRC-E-353 REVISION 1

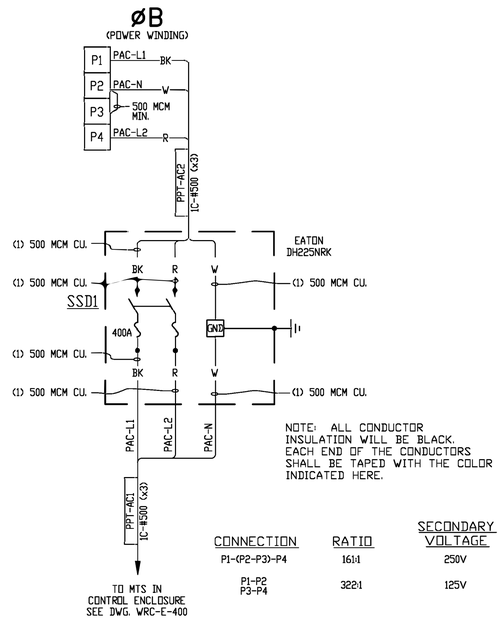

PPT-WRC PPT

POWER WINDING

P:\0423300\DWG\RECORD\WRC\CAD\WRC-E-354.DWG

DGR ENGINEERING
ROCK RAPIDS, IOWA
(712) 472-2531

DATE	DRAWN BY	NO.	APPROVED BY	REVISION DESCRIPTION
06-20	SMW	1	PDK	CONFORMING TO CONSTRUCTION RECORDS
10-19	SMW	0	PDK	FOR CONSTRUCTION

BLACK HILLS ENERGY

WEST RAPID CITY SUBSTATION

WIRING DIAGRAM
PPT

DRAWN BY SMW DATE 6-19
APPROVED BY PDK DATE 6-19

DWG NO. WRC-E-354 REVISION 1

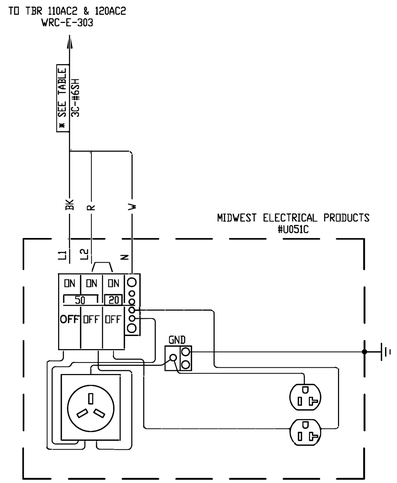

YARD RECEPTACLES

CABLE IDENTIFICATION	
EQUIPMENT	CABLE NO.
RECEPTACLE 1	RCPT1
RECEPTACLE 2	RCPT2

P:\04233\00\DWG\RECORD\WRC\CAD\WRC-E-361.DWG

DGR ENGINEERING
ROCK RAPIDS, IOWA
(712) 472-2531

DATE	DRAWN BY	NO.	APPROVED BY	REVISION DESCRIPTION
06-20	SMW	1	PDK	CONFORMING TO CONSTRUCTION RECORDS
10-19	SMW	0	PDK	FOR CONSTRUCTION

BLACK HILLS ENERGY

WEST RAPID CITY SUBSTATION

WIRING DIAGRAM
YARD RECEPTACLES

DRAWN BY	SMW	DATE	6-19	DWG NO.	WRC-E-361	REVISION NO.	1
APPROVED BY	PDK	DATE	6-19				

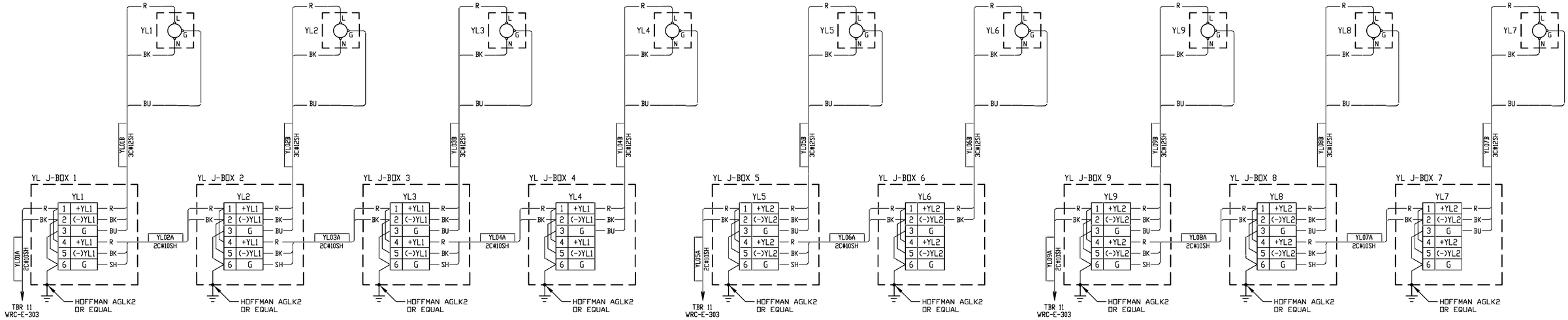

YARD LIGHT CIRCUIT #1

YARD LIGHT CIRCUIT #2A

YARD LIGHT CIRCUIT #2B

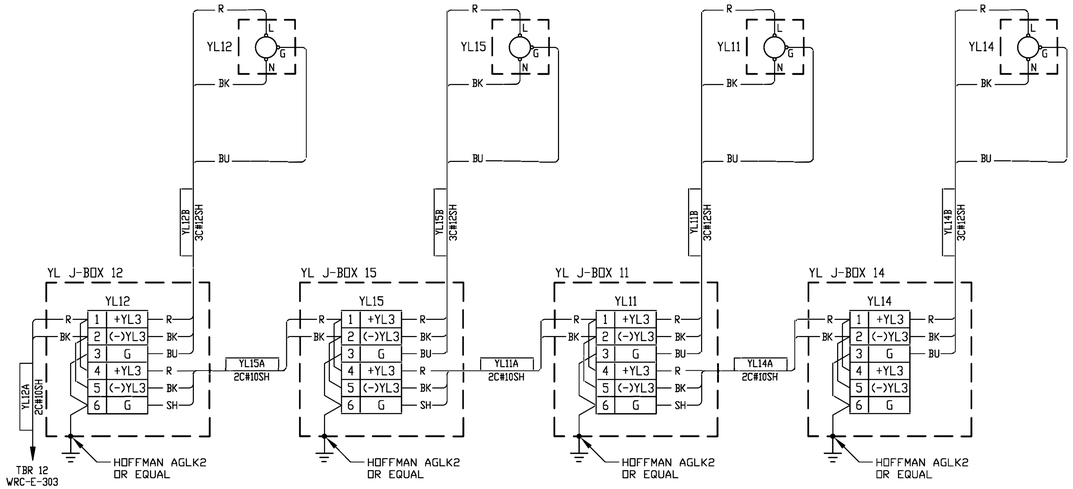

YARD LIGHT CIRCUIT #3

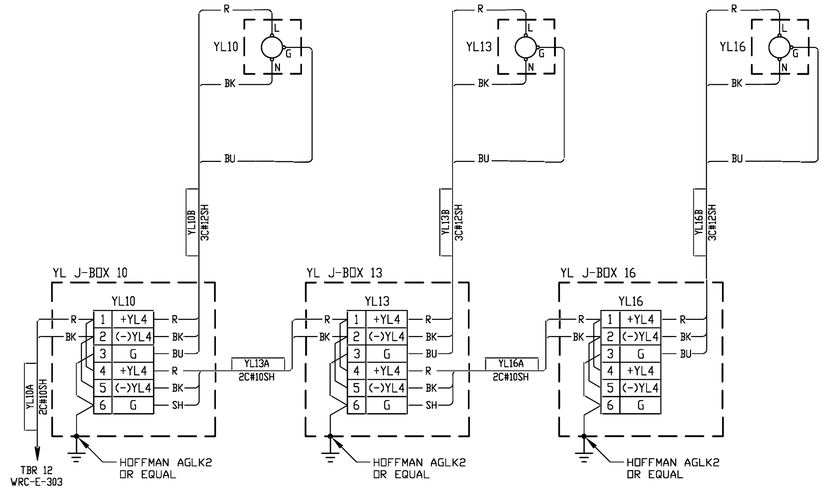

YARD LIGHT CIRCUIT #4

P:\04023\00\DWG\RECORD\WRCC\CAD\WRC-E-362.DWG

ROCK RAPIDS, IOWA
(712) 472-2531

DATE	DRAWN BY	NO.	APPROVED BY	REVISION DESCRIPTION
06-20	SMW	1	PDK	CONFORMING TO CONSTRUCTION RECORDS
10-19	SMW	0	PDK	FOR CONSTRUCTION

BLACK HILLS ENERGY

WEST RAPID CITY SUBSTATION

WIRING DIAGRAM
YARD LIGHTS

DRAWN BY SMW DATE 6-19
APPROVED BY PDK DATE 6-19

DWG NO. WRC-E-362 REVISION 1

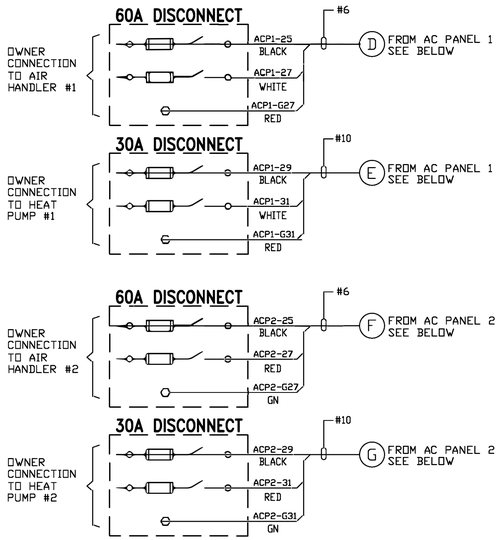

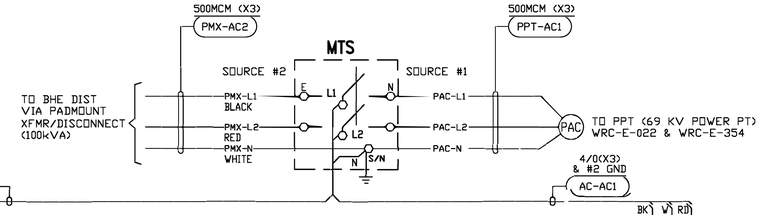

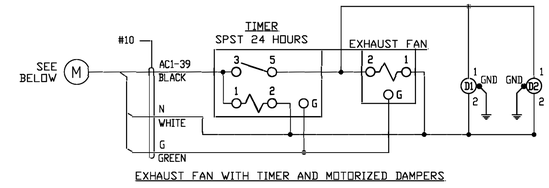

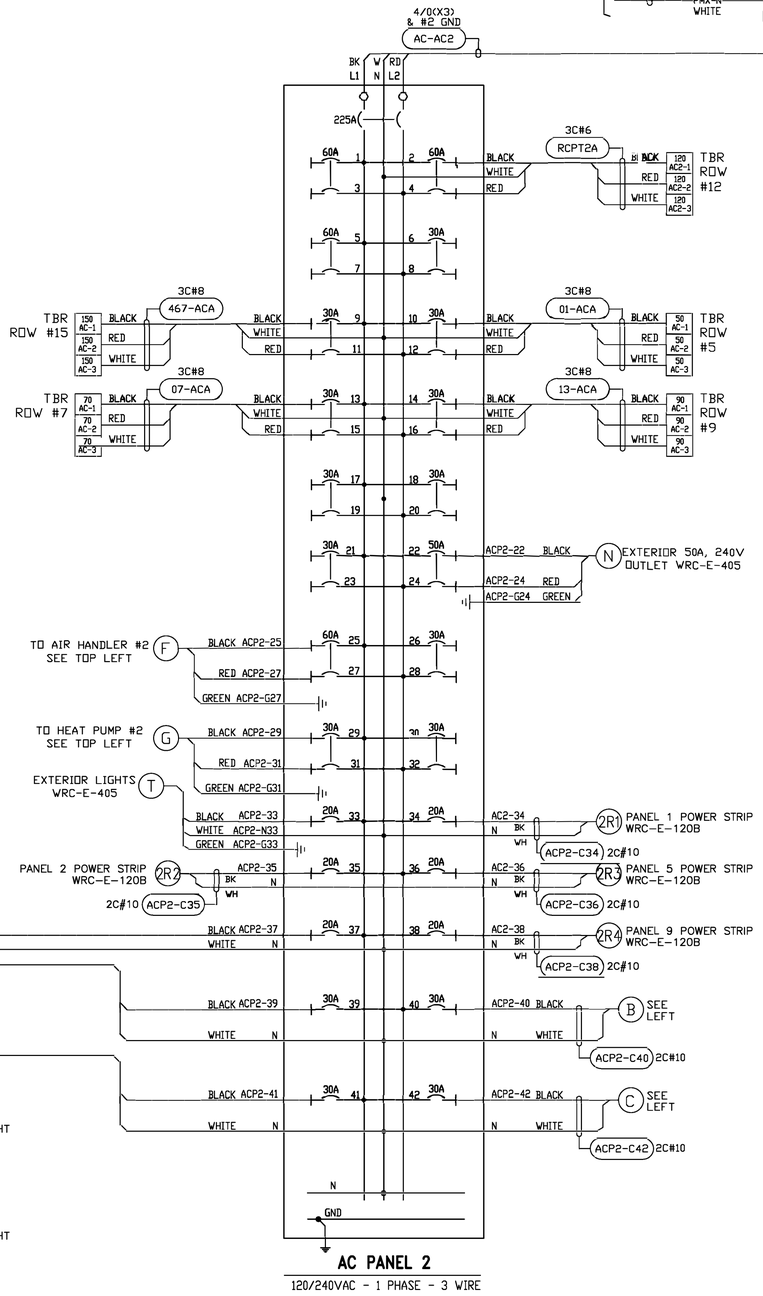

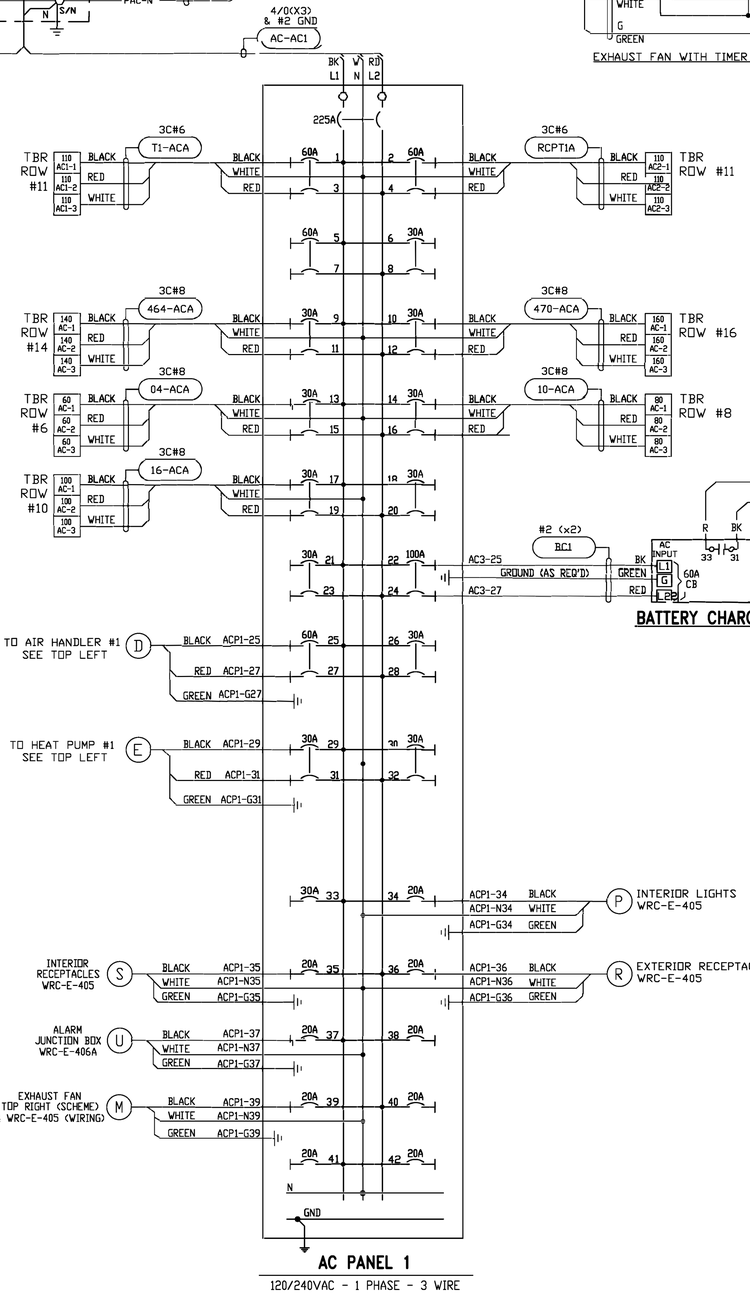

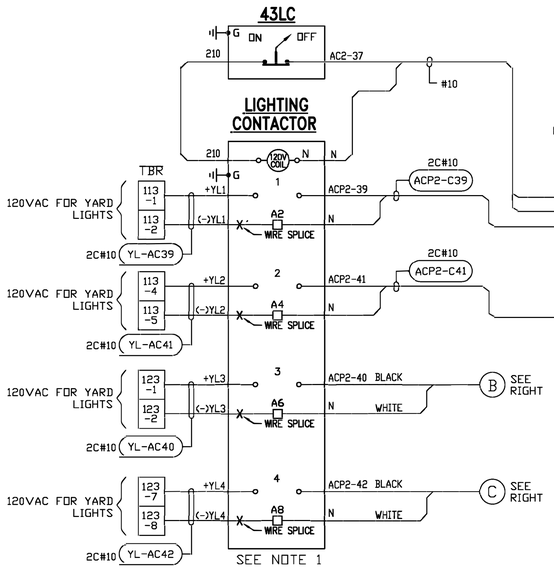

NOTES:
1. #6 WIRE OR LARGER MUST BE USED FOR ALL YARD LIGHTING CIRCUITS TO REDUCE VOLTAGE DROP.

DATE	DRAWN BY	NO.	APPROVED BY	REVISION DESCRIPTION
06-20	SMW	1	PDK	CONFORMING TO CONSTRUCTION RECORDS
10-19	SMW	0	PDK	FOR CONSTRUCTION

BLACK HILLS ENERGY

WEST RAPID CITY SUBSTATION

WIRING DIAGRAM
AC PANEL 1 AND 2

DRAWN BY SMW DATE 1-19
APPROVED BY PDK DATE 1-19
DWG NO. WRC-E-400 REVISION 1

DGR ENGINEERING
ROCK RAPIDS, IOWA
(712) 472-2531

P:\04233\00\DWG\RECORD\WRC\CAD\WRC-E-400.DWG

WARNING:
EXHAUST FAN MOTOR WILL RESTART AFTER MOTOR THERMAL PROTECTOR TRIPS, COOLS, THEN RESETS.

NOTE:
FOR ELECTRICAL NOTES, SEE DRAWING WRC-C-512

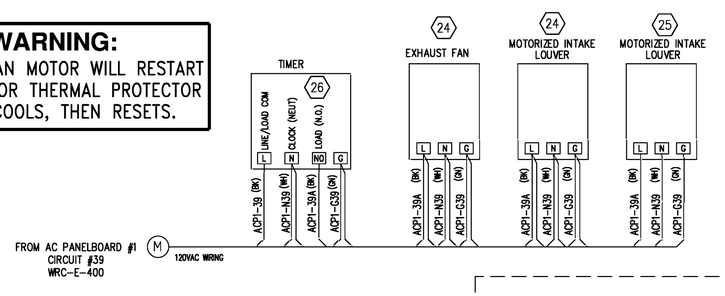

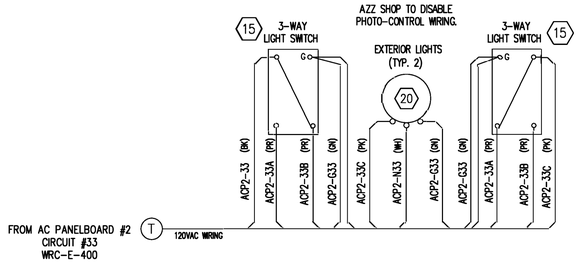

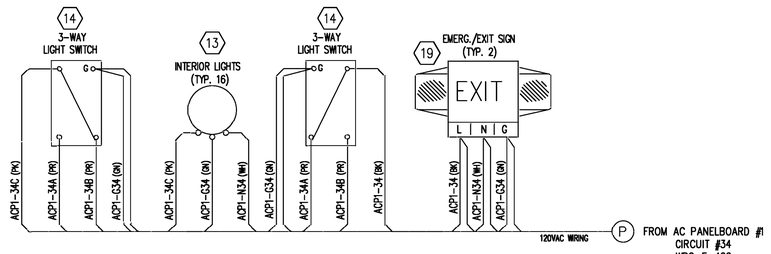

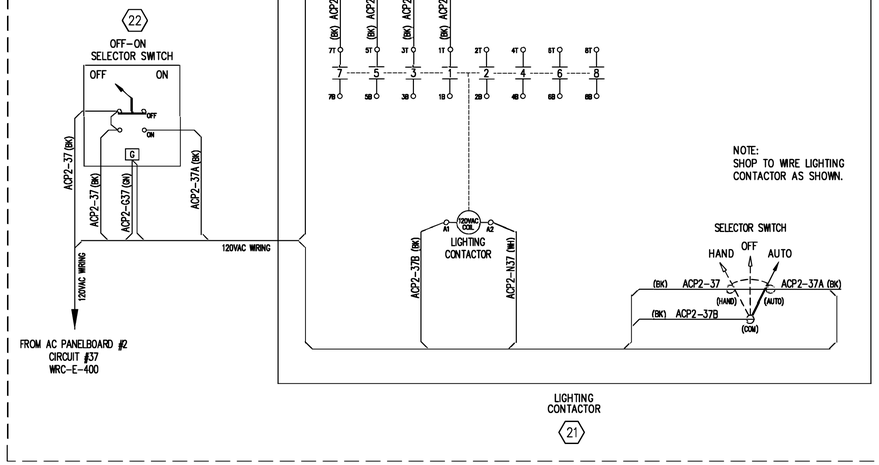

PARTIAL WIRING SHOWN BY BUILDING SUPPLIER.
REFER TO WRC-E-400 AND WRC-E-120A FOR COMPLETE WIRING

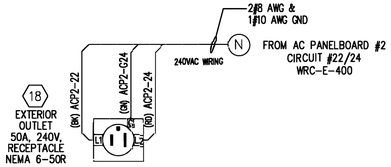

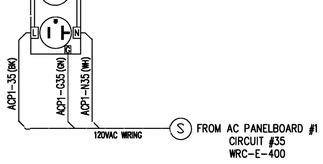

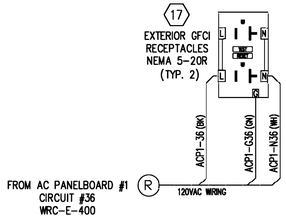

CUSTOMER PO#: 10083-164484

DATE	DRAWN BY	NO.	APPROVED BY	REVISION DESCRIPTION
06-20	JRS	1	MEL	CONFORMING TO CONSTRUCTION RECORDS
12/19	JRS	0	MEL	WAS DWG 2014323-W1, REV 0

BLACK HILLS ENERGY

WEST RAPID CITY SUBSTATION

WIRING DIAGRAM CONTROL ENCLOSURE

DRAWN BY: DB/AZZ DATE: 5/4/19
APPROVED BY: EI/AZZ DATE: 5/4/19
DWG NO. WRC-E-405 REVISION NO. 1

P:\0432300\DWG\RECORD\WRC\CAD\WRC-E-405.DWG

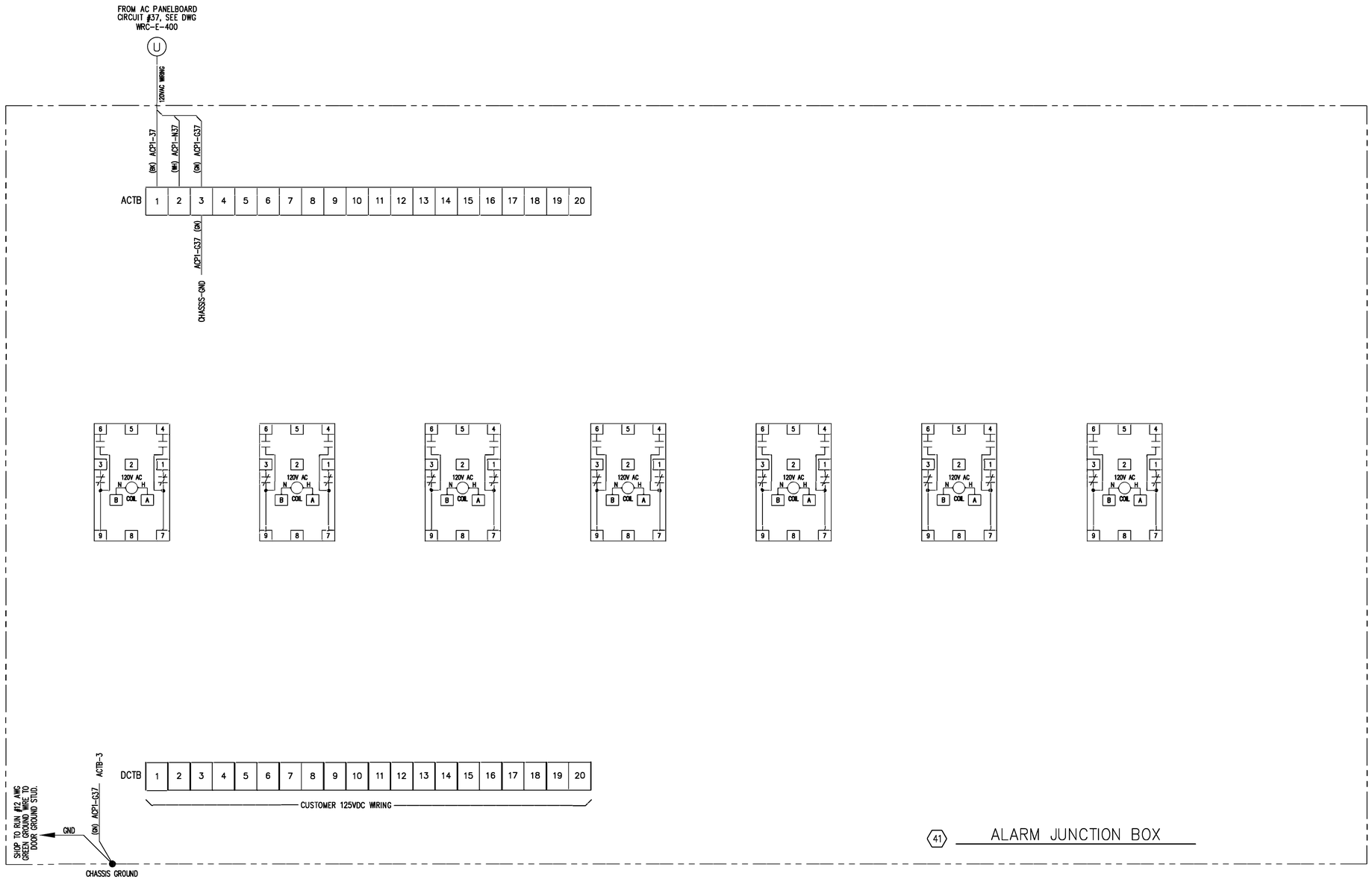

NOTE:
FOR ELECTRICAL NOTES, SEE DWG WRC-C-512

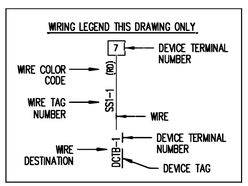

DATE	DRAWN BY	NO.	APPROVED BY	REVISION DESCRIPTION
06-20	SMW	1	PDK	CONFORMING TO CONSTRUCTION RECORDS
12-19	SMW	0	MEL	WAS DWG 2014323, W4, REV. 0

BLACK HILLS ENERGY

WEST RAPID CITY SUBSTATION

CONTROL ENCLOSURE
ALARM J-BOX WIRING

DRAWN BY FR/AZZ DATE 4/8/19
APPROVED BY LS/AZZ DATE 4/8/19
DWG NO. WRC-E-406A REVISION NO. 1

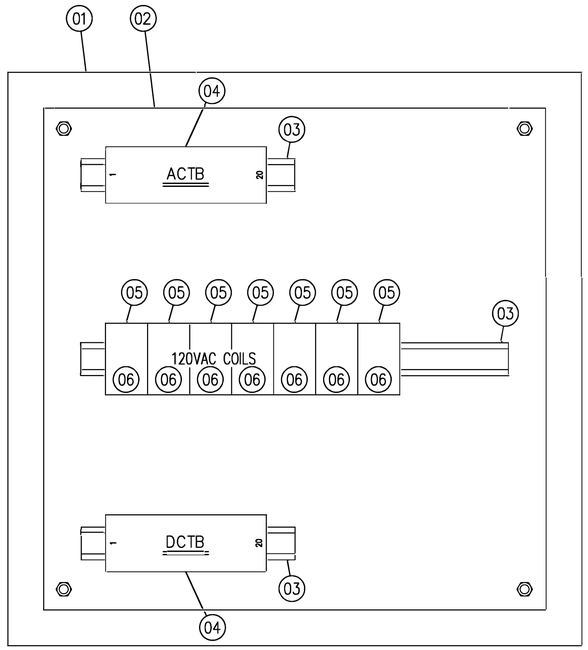

41 ALARM JUNCTION BOX LAYOUT

NOTE:
FOR ELECTRICAL NOTES,
SEE DWG WRC-C-512

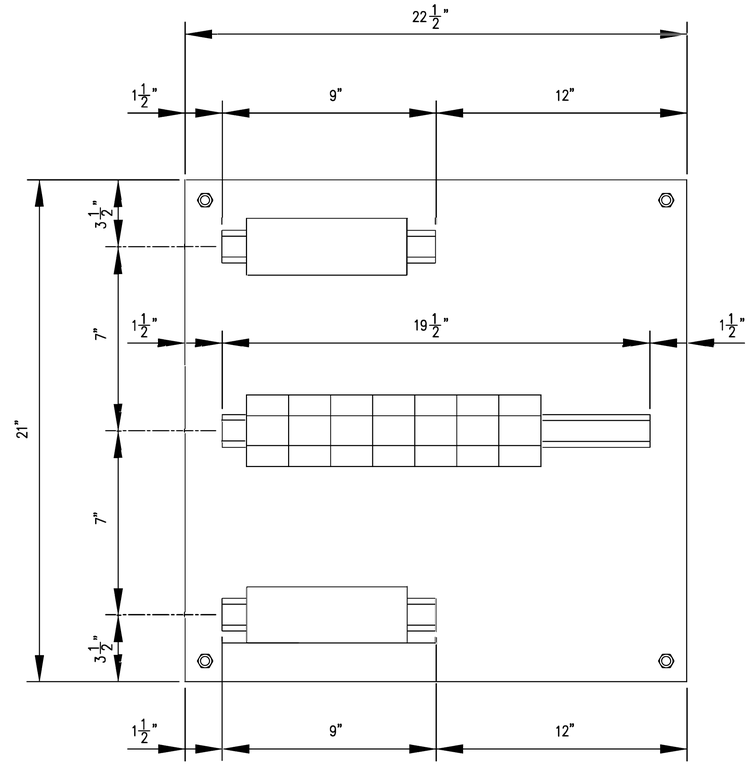

41 ALARM JUNCTION BOX DIMENSIONS

MATERIAL LIST

ITEM NO.	TOTAL QTY	MATERIAL DESCRIPTION
01	1	WALL MOUNT STEEL ENCLOSURE. SEE BOM L2014323, ITEM 41 FOR COMPLETE DESCRIPTION.
02	1	ENCLOSURE BACK PANEL. SEE BOM L2014323, ITEM 41 FOR COMPLETE DESCRIPTION.
03	3	DIN MOUNTING RAIL. SEE BOM L2014323, ITEM 41 FOR COMPLETE DESCRIPTION.
04	2	TERMINAL BLOCK ASSEMBLY. SEE BOM L2014323, ITEM 41 FOR COMPLETE DESCRIPTION.
05	7	DIN SOCKET RELAY BASE. SEE BOM L2014323, ITEM 41 FOR COMPLETE DESCRIPTION.
06	7	PANEL PLUG-IN RELAY, 120VAC COIL. SEE BOM L2014323, ITEM 41 FOR COMPLETE DESCRIPTION.

DATE	DRAWN BY	NO.	APPROVED BY	REVISION DESCRIPTION
06-20	SMW	1	PDK	CONFORMING TO CONSTRUCTION RECORDS
12-19	SMW	0	MEL	WAS DWG 2014323, W3, REV. 0

BLACK HILLS ENERGY

WEST RAPID CITY SUBSTATION

CONTROL ENCLOSURE
ALARM J-BOX LAYOUT

DRAWN BY: FR/AZZ DATE: 4/8/19
APPROVED BY: LS/AZZ DATE: 4/8/19

DWG NO. WRC-E-406B REVISED 1

PROVISION FOR MAINTENANCE CONNECTION

NEG E E POS

DC XFR SW

L L

N N

TO BATT CHGR WRC-E-400 (DC)

#4 (x2) DC-DC — POS R — NEG BK

4/0 (x2) DC-DB — POS — NEG

4/0 (x2) DC-0 A — POS — NEG

BATTERY 125 VDC 525 A-HR

DC TERMINAL BOX

P N

4/0 (x2) DC1

4/0 (x2) DC2

FUT. DC PNL 3

FUT. DC PNL 4

RED BLACK

POS(+) NEG(-)

225A

2C#10 T1-DCA — TBR ROW 11 110DC1 — 110 DC-1 / 110 DC-2

2C#6 464-DC1A — TBR ROW 14 140DC1 — 140 DC1-1 / 140 DC1-2

2C#6 470-DC1A — TBR ROW 16 160DC1 — 160 DC1-1 / 160 DC1-2

2C#6 01-DC1A — TBR ROW 5 50DC1 — 50 DC1-1 / 50 DC1-2

2C#6 07-DC1A — TBR ROW 7 70DC1 — 70 DC1-1 / 70 DC1-2

2C#6 13-DC1A — TBR ROW 9 90DC1 — 90 DC1-1 / 90 DC1-2

2C#10 DC1P — RELAY PANEL 1 — PRIMARY DC SUPPLY — P1-A1 / P1-A2 — 1DCP25 RED(+) — 1DCN27 BLACK(-)

2C#10 DC3P — RELAY PANEL 3 — PRIMARY DC SUPPLY — P3-A1 / P3-A2 — 1DCP29 RED(+) — 1DCN31 BLACK(-)

2C#10 DC5P — RELAY PANEL 5 — PRIMARY DC SUPPLY — P5-A1 / P5-A2 — 1DCP33 RED(+) — 1DCN35 BLACK(-)

2C#10 DC9P — RELAY PANEL 9 — PRIMARY DC SUPPLY — P9-A1 / P9-A2 — 1DCP37 RED(+) — 1DCN39 BLACK(-)

2C#6 467-DC1A — TBR ROW 15 150DC1 — 150 DC1-1 / 150 DC1-2

2C#6 04-DC1A — TBR ROW 6 60DC1 — 60 DC1-1 / 60 DC1-2

2C#6 10-DC1A — TBR ROW 8 80DC1 — 80 DC1-1 / 80 DC1-2

2C#6 16-DC1A — TBR ROW 10 100DC1 — 100 DC1-1 / 100 DC1-2

DC2P — RELAY PANEL 2 — PRIMARY DC SUPPLY — P2-A1 / P2-A2 — 1DCP26 RED(+) — 1DCN28 BLACK(-)

DC4P — RELAY PANEL 4 — PRIMARY DC SUPPLY — P4-A1 / P4-A2 — 1DCP30 RED(+) — 1DCN32 BLACK(-)

DC8P — RELAY PANEL 8 — PRIMARY DC SUPPLY — P8-A1 / P8-A2 — 1DCP34 RED(+) — 1DCN36 BLACK(-)

DC10P — RELAY PANEL 10 — PRIMARY DC SUPPLY — P10-A1 / P10-A2 — 1DCP38 RED(+) — 1DCN40 BLACK(-)

30A breakers 1–40; 20A breakers 25–40; GND

DC PANEL 1

RED BLACK

POS(+) NEG(-)

225A

2C#10 464-DC2A — TBR ROW 14 140DC2 — 140 DC2-1 / 140 DC2-2

2C#10 470-DC2A — TBR ROW 16 160DC2 — 160 DC2-1 / 160 DC2-2

2C#10 01-DC2A — TBR ROW 5 50DC2 — 50 DC2-1 / 50 DC2-2

2C#10 07-DC2A — TBR ROW 7 70DC2 — 70 DC2-1 / 70 DC2-2

2C#10 13-DC2A — TBR ROW 9 90DC2 — 90 DC2-1 / 90 DC2-2

2C#10 DC1B — RELAY PANEL 1 — BACKUP DC SUPPLY — P1-A3 / P1-A4 — 2DCP25 RED(+) — 2DCN27 BLACK(-)

2C#10 DC3B — RELAY PANEL 3 — BACKUP DC SUPPLY — P3-A3 / P3-A4 — 2DCP29 RED(+) — 2DCN31 BLACK(-)

2C#10 DC5B — RELAY PANEL 5 — BACKUP DC SUPPLY — P5-A3 / P5-A4 — 2DCP33 RED(+) — 2DCN35 BLACK(-)

2C#10 DC9B — RELAY PANEL 9 — BACKUP DC SUPPLY — P9-A3 / P9-A4 — 2DCP37 RED(+) — 2DCN39 BLACK(-)

2C#10 467-DC2A — TBR ROW 15 150DC2 — 150 DC2-1 / 150 DC2-2

2C#10 04-DC2A — TBR ROW 6 60DC2 — 60 DC2-1 / 60 DC2-2

2C#10 10-DC2A — TBR ROW 8 80DC2 — 80 DC2-1 / 80 DC2-2

2C#10 16-DC2A — TBR ROW 10 100DC2 — 100 DC2-1 / 100 DC2-2

DC2B — RELAY PANEL 2 — BACKUP DC SUPPLY — P2-A3 / P2-A4 — 2DCP26 RED(+) — 2DCN28 BLACK(-)

DC4B — RELAY PANEL 4 — BACKUP DC SUPPLY — P4-A3 / P4-A4 — 2DCP30 RED(+) — 2DCN32 BLACK(-)

DC8B — RELAY PANEL 8 — BACKUP DC SUPPLY — P8-A3 / P8-A4 — 2DCP34 RED(+) — 2DCN36 BLACK(-)

DC10B — RELAY PANEL 10 — BACKUP DC SUPPLY — P10-A3 / P10-A4 — 2DCP38 RED(+) — 2DCN40 BLACK(-)

30A breakers 1–40; 20A breakers 25–40; GND

DC PANEL 2

P:\04233\000\DWG\RECORD\WRC\CAD\WRC-E-410.DWG

DGR ENGINEERING
ROCK RAPIDS, IOWA
(712) 472-2531

DATE	DRAWN BY	NO.	APPROVED BY	REVISION DESCRIPTION
06-20	SMW	1	PDK	CONFORMING TO CONSTRUCTION RECORDS
10-19	SMW	0	PDK	FOR CONSTRUCTION

BLACK HILLS ENERGY

WEST RAPID CITY SUBSTATION

WIRING DIAGRAM
DC PANEL 1 AND 2

DRAWN BY SMW DATE 1-19

APPROVED BY PDK DATE 1-19

DWG NO. WRC-E-410

REVISION NO. 1

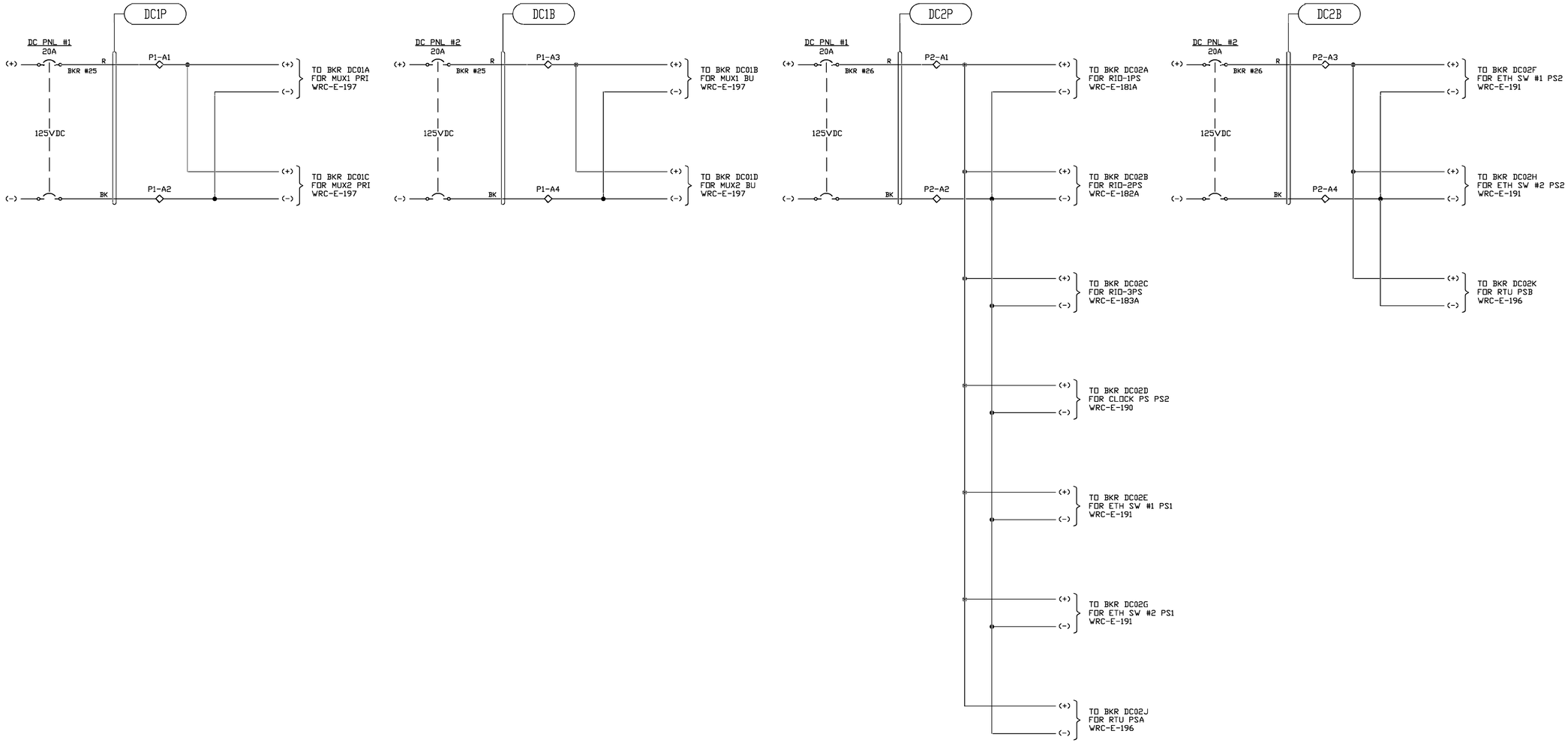

P:\04233\00\DWG\RECORD\WRC\CAD\WRC-E-412A.DWG

DGR ENGINEERING
ROCK RAPIDS, IOWA
(712) 472-2531

LEGEND:
◇ INDICATES TERMINAL POINT

DATE	DRAWN BY	NO.	APPROVED BY	REVISION DESCRIPTION
06-20	SMW	1	PJK	CONFORMING TO CONSTRUCTION RECORDS
10-19	KLV	0	PJK	FOR CONSTRUCTION

BLACK HILLS ENERGY

WEST RAPID CITY SUBSTATION
DC SCHEMATIC
DC DISTRIBUTION – PANEL 1 & 2

DRAWN BY KLV DATE 09-19
APPROVED BY PJK DATE 09-19
DWG NO. WRC-E-412A REVISION 1

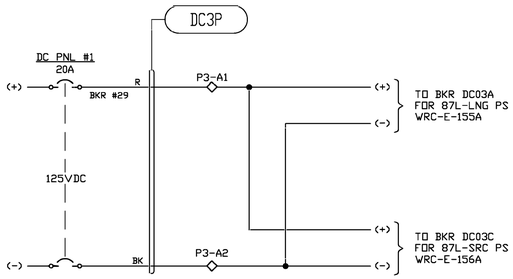

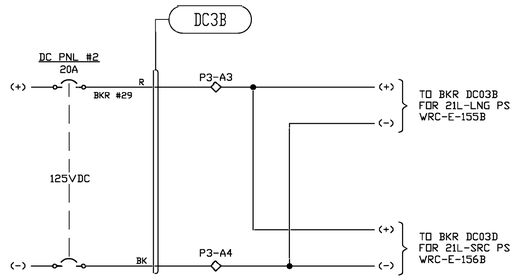

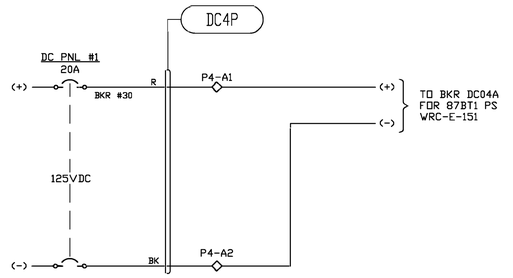

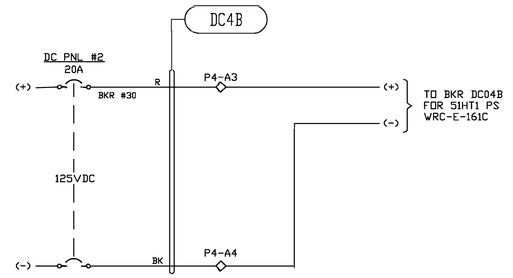

P:\04233\00\DWG\RECORD\WRC\CAD\WRC-E-412B.DWG

DGR ENGINEERING
ROCK RAPIDS, IOWA
(712) 472-2531

LEGEND:
◇ INDICATES TERMINAL POINT

DATE	DRAWN BY	NO.	APPROVED BY	REVISION DESCRIPTION
06-20	SMW	1	PDK	CONFORMING TO CONSTRUCTION RECORDS
10-19	KLV	0	PDK	FOR CONSTRUCTION

BLACK HILLS ENERGY

WEST RAPID CITY SUBSTATION
DC SCHEMATIC
DC DISTRIBUTION – PANEL 3 & 4

DRAWN BY KLV DATE 09-19
APPROVED BY PDK DATE 09-19

DWG NO. WRC-E-412B REVISION NO. 1

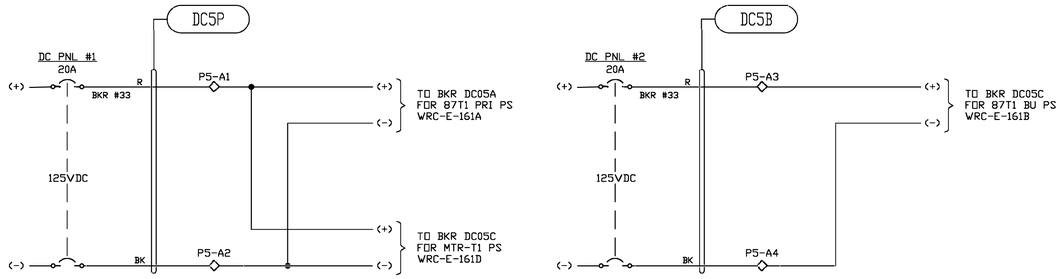

P:\04233\001\DWG\RECORD\WRC\CAD\WRC-E-412C.DWG

LEGEND:
◇ INDICATES TERMINAL POINT

DGR ENGINEERING
ROCK RAPIDS, IOWA
(712) 472-2531

DATE	DRAWN BY	NO.	APPROVED BY	REVISION DESCRIPTION
06-20	SMW	1	PDK	CONFORMING TO CONSTRUCTION RECORDS
10-19	KLV	0	PDK	FOR CONSTRUCTION

BLACK HILLS ENERGY

WEST RAPID CITY SUBSTATION
DC SCHEMATIC
DC DISTRIBUTION – PANEL 5 & 6

DRAWN BY KLV DATE 09-19
APPROVED BY PDK DATE 09-19
DWG NO. WRC-E-412C REVISION 1

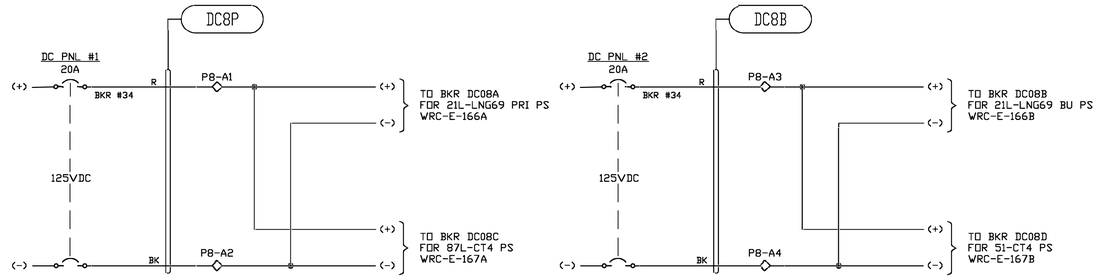

P:\04023900\DWG\RECORD\WRCC\CAD\WRC-E-412D.DWG

DGR ENGINEERING
ROCK RAPIDS, IOWA
(712) 472-2531

LEGEND:
◇ INDICATES TERMINAL POINT

DATE	DRAWN BY	NO.	APPROVED BY	REVISION DESCRIPTION
06-20	SMW	1	PDK	CONFORMING TO CONSTRUCTION RECORDS
10-19	KLV	0	PDK	FOR CONSTRUCTION

BLACK HILLS ENERGY

WEST RAPID CITY SUBSTATION
DC SCHEMATIC
DC DISTRIBUTION – PANEL 7 & 8

DRAWN BY KLV DATE 09-19
APPROVED BY PDK DATE 09-19

DWG NO. WRC-E-412D REVISION 1

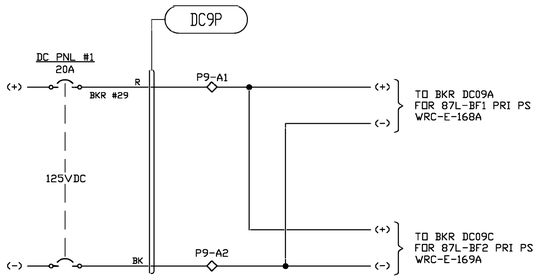

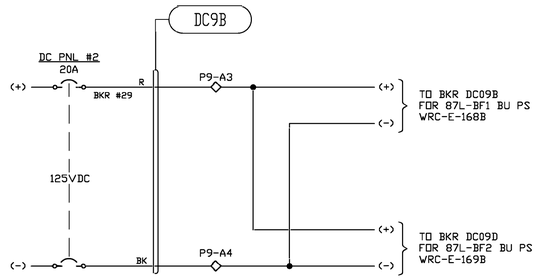

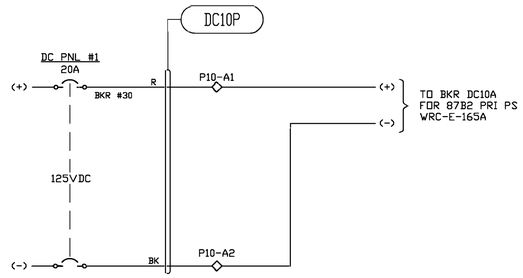

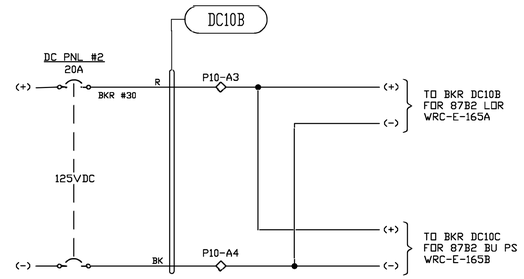

P:\04233\00\DWG\RECORD\WRC\CAD\WRC-E-412E.DWG

DGR ENGINEERING
ROCK RAPIDS, IOWA
(712) 472-2531

LEGEND:
◇ INDICATES TERMINAL POINT

DATE	DRAWN BY	NO.	APPROVED BY	REVISION DESCRIPTION
06-20	SMW	1	PDK	CONFORMING TO CONSTRUCTION RECORDS
10-19	KLV	0	PDK	FOR CONSTRUCTION

BLACK HILLS ENERGY

WEST RAPID CITY SUBSTATION
DC SCHEMATIC
DC DISTRIBUTION – PANEL 9 & 10

DRAWN BY KLV DATE 09-19
APPROVED BY PDK DATE 09-19

DWG NO. WRC-E-412E REVISION 1

YARD EQUIPMENT CABLES

CABLE	FROM	TO	CABLE SIZE	LENGTH (FT.)	DESCRIPTION
AC STATION POWER CABLES					
PPT–AC1	PPT PWR DISC	CTRL ENCL MTS	1/C–500 (x3)	150 (x3)	NORMAL STATION POWER
PPT–AC2	PPT PWR DISC	PPT	1/C–500 (x3)	10 (x3)	NORMAL STATION POWER
PMX–AC2	CTRL ENCL MTS	PMX	1/C–500 (x3)	240 (x3)	EMERGENCY STATION POWER
AC POWER CABLES					
464–AC	CB 23464	TB RACK (CTRL ENCL)	3/C–#6 SH	200	CB 23464 AC POWER
467–AC	CB 23467	TB RACK (CTRL ENCL)	3/C–#6 SH	170	CB 23467 AC POWER
470–AC	CB 23470	TB RACK (CTRL ENCL)	3/C–#6 SH	185	CB 23470 AC POWER
01–AC	CB 6WR01	TB RACK (CTRL ENCL)	3/C–#6 SH	150	CB 6WR01 AC POWER
04–AC	CB 6WR04	TB RACK (CTRL ENCL)	3/C–#6 SH	110	CB 6WR04 AC POWER
07–AC	CB 6WR07	TB RACK (CTRL ENCL)	3/C–#6 SH	165	CB 6WR07 AC POWER
10–AC	CB 6WR10	TB RACK (CTRL ENCL)	3/C–#6 SH	165	CB 6WR10 AC POWER
13–AC	CB 6WR13	TB RACK (CTRL ENCL)	3/C–#6 SH	125	CB 6WR13 AC POWER
16–AC	CB 6WR16	TB RACK (CTRL ENCL)	3/C–#6 SH	175	CB 6WR16 AC POWER
T1–AC	XFMR T1	TB RACK (CTRL ENCL)	3/C–#6 SH	255	XFMR T1 AC POWER
AC YARD RECEPTACLES AND YARD LIGHTING					
RCPT1	RECPT 1	TB RACK (CTRL ENCL)	3/C–#6 SH	145	YARD RECEPTACLE #1 AC POWER
RCPT2	RECPT 2	TB RACK (CTRL ENCL)	3/C–#6 SH	150	YARD RECEPTACLE #2 AC POWER
YL01A	YL J–BOX 1	TB RACK (CTRL ENCL)	2/C–#10 SH	185	YARD LIGHT CIRCUIT #1
YL01B	YL J–BOX 1	YL1	3/C–#12 SH	20	YARD LIGHT YL1
YL02A	YL J–BOX 1	YL J–BOX 2	2/C–#10 SH	180	YARD LIGHT CIRCUIT #1
YL02B	YL J–BOX 2	YL2	3/C–#12 SH	20	YARD LIGHT YL2
YL03A	YL J–BOX 2	YL J–BOX 3	2/C–#10 SH	125	YARD LIGHT CIRCUIT #1
YL03B	YL J–BOX 3	YL3	3/C–#12 SH	20	YARD LIGHT YL3
YL04A	YL J–BOX 3	YL J–BOX 4	2/C–#10 SH	65	YARD LIGHT CIRCUIT #1
YL04B	YL J–BOX 4	YL4	3/C–#12 SH	20	YARD LIGHT YL4
YL05A	YL J–BOX 5	TB RACK (CTRL ENCL)	2/C–#10 SH	85	YARD LIGHT CIRCUIT #2
YL05B	YL J–BOX 5	YL5	3/C–#12 SH	20	YARD LIGHT YL5
YL06A	YL J–BOX 5	YL J–BOX 6	2/C–#10 SH	135	YARD LIGHT CIRCUIT #2
YL06B	YL J–BOX 6	YL6	3/C–#12 SH	20	YARD LIGHT YL6
YL07A	YL J–BOX 7	YL J–BOX 8	2/C–#10 SH	210	YARD LIGHT CIRCUIT #2
YL07B	YL J–BOX 7	YL7	3/C–#12 SH	20	YARD LIGHT YL7
YL08A	YL J–BOX 8	YL J–BOX 9	2/C–#10 SH	120	YARD LIGHT CIRCUIT #2
YL08B	YL J–BOX 8	YL8	3/C–#12 SH	20	YARD LIGHT YL8
YL09A	YL J–BOX 9	TB RACK (CTRL ENCL)	2/C–#10 SH	75	YARD LIGHT CIRCUIT #2
YL09B	YL J–BOX 9	YL9	3/C–#12 SH	20	YARD LIGHT YL9
YL10A	YL J–BOX 10	TB RACK (CTRL ENCL)	2/C–#10 SH	160	YARD LIGHT CIRCUIT #4
YL10B	YL J–BOX 10	YL10	3/C–#12 SH	20	YARD LIGHT YL10
YL11A	YL J–BOX 11	YL J–BOX 15	2/C–#10 SH	85	YARD LIGHT CIRCUIT #3
YL11B	YL J–BOX 11	YL11	3/C–#12 SH	20	YARD LIGHT YL11
YL12A	YL J–BOX 12	TB RACK (CTRL ENCL)	2/C–#10 SH	105	YARD LIGHT CIRCUIT #3
YL12B	YL J–BOX 12	YL12	3/C–#12 SH	20	YARD LIGHT YL12
YL13A	YL J–BOX 13	YL J–BOX 10	2/C–#10 SH	60	YARD LIGHT CIRCUIT #4
YL13B	YL J–BOX 13	YL13	3/C–#12 SH	20	YARD LIGHT YL13
YL14A	YL J–BOX 14	YL J–BOX 11	2/C–#10 SH	75	YARD LIGHT CIRCUIT #3
YL14B	YL J–BOX 14	YL14	3/C–#12 SH	20	YARD LIGHT YL14
YL15A	YL J–BOX 15	YL J–BOX 12	2/C–#10 SH	75	YARD LIGHT CIRCUIT #3
YL15B	YL J–BOX 15	YL15	3/C–#12 SH	20	YARD LIGHT YL15
YL16A	YL J–BOX 16	YL J–BOX 13	2/C–#10 SH	70	YARD LIGHT CIRCUIT #4
YL16B	YL J–BOX 16	YL16	3/C–#12 SH	20	YARD LIGHT YL16

YARD EQUIPMENT CABLES

CABLE	FROM	TO	CABLE SIZE	LENGTH (FT.)	DESCRIPTION
CIRCUIT BREAKER DC POWER/CONTROL CABLE					
464–DC1	CB 23464	TB RACK (CTRL ENCL)	2/C–#6 SH	200	CB 23464 PRIMARY DC
464–DC2	CB 23464	TB RACK (CTRL ENCL)	2/C–#10 SH	200	CB 23464 BACKUP DC
464–S1	CB 23464	TB RACK (CTRL ENCL)	12/C–#10 SH	200	CB 23464 CONTROLS
464–S2	CB 23464	TB RACK (CTRL ENCL)	12/C–#10 SH	200	CB 23464 CONTROLS
464–S3	CB 23464	TB RACK (CTRL ENCL)	12/C–#10 SH	200	CB 23464 CONTROLS
467–DC1	CB 23467	TB RACK (CTRL ENCL)	2/C–#6 SH	170	CB 23467 PRIMARY DC
467–DC2	CB 23467	TB RACK (CTRL ENCL)	2/C–#10 SH	170	CB 23467 BACKUP DC
467–S1	CB 23467	TB RACK (CTRL ENCL)	12/C–#10 SH	170	CB 23467 CONTROLS
467–S2	CB 23467	TB RACK (CTRL ENCL)	12/C–#10 SH	170	CB 23467 CONTROLS
467–S3	CB 23467	TB RACK (CTRL ENCL)	12/C–#10 SH	170	CB 23467 CONTROLS
470–DC1	CB 23470	TB RACK (CTRL ENCL)	2/C–#6 SH	185	CB 23470 PRIMARY DC
470–DC2	CB 23470	TB RACK (CTRL ENCL)	2/C–#10 SH	185	CB 23470 BACKUP DC
470–S1	CB 23470	TB RACK (CTRL ENCL)	12/C–#10 SH	185	CB 23470 CONTROLS
470–S2	CB 23470	TB RACK (CTRL ENCL)	12/C–#10 SH	185	CB 23470 CONTROLS
470–S3	CB 23470	TB RACK (CTRL ENCL)	12/C–#10 SH	185	CB 23470 CONTROLS
01–DC1	CB 6WR01	TB RACK (CTRL ENCL)	2/C–#6 SH	150	CB 6WR01 PRIMARY DC
01–DC2	CB 6WR01	TB RACK (CTRL ENCL)	2/C–#10 SH	150	CB 6WR01 BACKUP DC
01–S1	CB 6WR01	TB RACK (CTRL ENCL)	12/C–#10 SH	150	CB 6WR01 CONTROLS
01–S2	CB 6WR01	TB RACK (CTRL ENCL)	12/C–#10 SH	150	CB 6WR01 CONTROLS
01–S3	CB 6WR01	TB RACK (CTRL ENCL)	12/C–#10 SH	150	CB 6WR01 CONTROLS
04–DC1	CB 6WR04	TB RACK (CTRL ENCL)	2/C–#6 SH	110	CB 6WR04 PRIMARY DC
04–DC2	CB 6WR04	TB RACK (CTRL ENCL)	2/C–#10 SH	110	CB 6WR04 BACKUP DC
04–S1	CB 6WR04	TB RACK (CTRL ENCL)	12/C–#10 SH	110	CB 6WR04 CONTROLS
04–S2	CB 6WR04	TB RACK (CTRL ENCL)	12/C–#10 SH	110	CB 6WR04 CONTROLS
04–S3	CB 6WR04	TB RACK (CTRL ENCL)	12/C–#10 SH	110	CB 6WR04 CONTROLS
07–DC1	CB 6WR07	TB RACK (CTRL ENCL)	2/C–#6 SH	165	CB 6WR07 PRIMARY DC
07–DC2	CB 6WR07	TB RACK (CTRL ENCL)	2/C–#10 SH	165	CB 6WR07 BACKUP DC
07–S1	CB 6WR07	TB RACK (CTRL ENCL)	12/C–#10 SH	165	CB 6WR07 CONTROLS
07–S2	CB 6WR07	TB RACK (CTRL ENCL)	12/C–#10 SH	165	CB 6WR07 CONTROLS
07–S3	CB 6WR07	TB RACK (CTRL ENCL)	12/C–#10 SH	165	CB 6WR07 CONTROLS
10–DC1	CB 6WR10	TB RACK (CTRL ENCL)	2/C–#6 SH	165	CB 6WR10 PRIMARY DC
10–DC2	CB 6WR10	TB RACK (CTRL ENCL)	2/C–#10 SH	165	CB 6WR10 BACKUP DC
10–S1	CB 6WR10	TB RACK (CTRL ENCL)	12/C–#10 SH	165	CB 6WR10 CONTROLS
10–S2	CB 6WR10	TB RACK (CTRL ENCL)	12/C–#10 SH	165	CB 6WR10 CONTROLS
10–S3	CB 6WR10	TB RACK (CTRL ENCL)	12/C–#10 SH	165	CB 6WR10 CONTROLS
13–DC1	CB 6WR13	TB RACK (CTRL ENCL)	2/C–#6 SH	125	CB 6WR13 PRIMARY DC
13–DC2	CB 6WR13	TB RACK (CTRL ENCL)	2/C–#10 SH	125	CB 6WR13 BACKUP DC
13–S1	CB 6WR13	TB RACK (CTRL ENCL)	12/C–#10 SH	125	CB 6WR13 CONTROLS
13–S2	CB 6WR13	TB RACK (CTRL ENCL)	12/C–#10 SH	125	CB 6WR13 CONTROLS
13–S3	CB 6WR13	TB RACK (CTRL ENCL)	12/C–#10 SH	125	CB 6WR13 CONTROLS
16–DC1	CB 6WR16	TB RACK (CTRL ENCL)	2/C–#6 SH	175	CB 6WR16 PRIMARY DC
16–DC2	CB 6WR16	TB RACK (CTRL ENCL)	2/C–#10 SH	175	CB 6WR16 BACKUP DC
16–S1	CB 6WR16	TB RACK (CTRL ENCL)	12/C–#10 SH	175	CB 6WR16 CONTROLS
16–S2	CB 6WR16	TB RACK (CTRL ENCL)	12/C–#10 SH	175	CB 6WR16 CONTROLS
16–S3	CB 6WR16	TB RACK (CTRL ENCL)	12/C–#10 SH	175	CB 6WR16 CONTROLS
TRANSFORMER DC POWER/CONTROL CABLE					
T1–DC	XFMR T1	TB RACK (CTRL ENCL)	2/C–#10 SH	255	XFMR T1 DC POWER
T1–S1	XFMR T1	TB RACK (CTRL ENCL)	12/C–#10 SH	255	XFMR T1 CONTROLS
T1–F1	XFMR T1	PANEL 2	FIBER–NOTE 2	400	XFMR T1 SEL–2411 COMM
T1–F2	XFMR T1	PANEL 5	FIBER–NOTE 2	400	XFMR T1 SEL–2600D COMM

NOTES:
1. CABLE SHIELDS SHALL BE GROUNDED AT ONE END FOR ALL SHIELDED ("SH") CONTROL CABLES. GROUND SHIELDS AT TBR IN CONTROL ENCLOSURE.
2. FIBER CABLE SHALL BE ROUTED IN 1" INNERDUCT FOR THE ENTIRE ROUTE OF THE FIBER CABLE. FIBER CABLE WILL BE FURNISHED AND TERMINATED BY OWNER.

P:\04233\00\DWG\RECORD\WRCC\CAD\WRCC-E-701.DWG

DGR ENGINEERING
ROCK RAPIDS, IOWA
(712) 472-2531

DATE	DRAWN BY	NO.	APPROVED BY	REVISION DESCRIPTION
06-20	SMW	3	PJK	CONFORMING TO CONSTRUCTION RECORDS
10-19	KLV	2	PJK	REVISED CABLE PMX-AC2 LENGTH
07-19	KLV	1	PJK	ADDED CABLE T1-F2
01-19	KLV	0	PJK	FOR CONSTRUCTION

BLACK HILLS ENERGY
WEST RAPID CITY SUBSTATION
CABLE SCHEDULE
YARD EQUIPMENT CABLES

DRAWN BY KLV DATE 01-19
APPROVED BY PJK DATE 01-19
DWG NO. WRC-E-701
REVISION 3

YARD EQUIPMENT CABLES

CABLE	FROM	TO	CABLE SIZE	LENGTH (FT.)	DESCRIPTION
CT CABLES					
464–C1	CB 23464	TB RACK (CTRL ENCL)	9/C–#10 SH	200	CB 23464 CT'S
464–C2	CB 23464	TB RACK (CTRL ENCL)	9/C–#10 SH	200	CB 23464 CT'S
467–C1	CB 23467	TB RACK (CTRL ENCL)	9/C–#10 SH	170	CB 23467 CT'S
467–C2	CB 23467	TB RACK (CTRL ENCL)	9/C–#10 SH	170	CB 23467 CT'S
470–C1	CB 23470	TB RACK (CTRL ENCL)	9/C–#10 SH	185	CB 23470 CT'S
470–C2	CB 23470	TB RACK (CTRL ENCL)	9/C–#10 SH	185	CB 23470 CT'S
01–C1	CB 6WR01	TB RACK (CTRL ENCL)	9/C–#10 SH	150	CB 6WR01 CT'S
01–C2	CB 6WR01	TB RACK (CTRL ENCL)	9/C–#10 SH	150	CB 6WR01 CT'S
04–C1	CB 6WR04	TB RACK (CTRL ENCL)	9/C–#10 SH	110	CB 6WR04 CT'S
04–C2	CB 6WR04	TB RACK (CTRL ENCL)	9/C–#10 SH	110	CB 6WR04 CT'S
07–C1	CB 6WR07	TB RACK (CTRL ENCL)	9/C–#10 SH	165	CB 6WR07 CT'S
07–C2	CB 6WR07	TB RACK (CTRL ENCL)	9/C–#10 SH	165	CB 6WR07 CT'S
10–C1	CB 6WR10	TB RACK (CTRL ENCL)	9/C–#10 SH	165	CB 6WR10 CT'S
10–C2	CB 6WR10	TB RACK (CTRL ENCL)	9/C–#10 SH	165	CB 6WR10 CT'S
13–C1	CB 6WR13	TB RACK (CTRL ENCL)	9/C–#10 SH	125	CB 6WR13 CT'S
13–C2	CB 6WR13	TB RACK (CTRL ENCL)	9/C–#10 SH	125	CB 6WR13 CT'S
16–C1	CB 6WR16	TB RACK (CTRL ENCL)	9/C–#10 SH	175	CB 6WR16 CT'S
16–C2	CB 6WR16	TB RACK (CTRL ENCL)	9/C–#10 SH	175	CB 6WR16 CT'S
T1–C1	XFMR T1	TB RACK (CTRL ENCL)	9/C–#10 SH	255	XFMR T1 CT'S
T1–C2	XFMR T1	TB RACK (CTRL ENCL)	9/C–#10 SH	255	XFMR T1 CT'S
T1–C3	XFMR T1	TB RACK (CTRL ENCL)	9/C–#10 SH	255	XFMR T1 CT'S
T1–C4	XFMR T1	TB RACK (CTRL ENCL)	9/C–#10 SH	255	XFMR T1 CT'S
CCVT/PT CABLES					
CCVT–1P	LNG CCVT DISC	TB RACK (CTRL ENCL)	9/C–#10 SH	165	LNG LINE POTENTIALS
CCVT–1P1	LNG CCVT DISC	LNG AØ CCVT	4/C–#10 SH	35	LNG LINE POTENTIALS
CCVT–1P2	LNG CCVT DISC	LNG BØ CCVT	4/C–#10 SH	10	LNG LINE POTENTIALS
CCVT–1P3	LNG CCVT DISC	LNG CØ CCVT	4/C–#10 SH	30	LNG LINE POTENTIALS
CCVT–2P	SRC CCVT DISC	TB RACK (CTRL ENCL)	9/C–#10 SH	115	SRC LINE POTENTIALS
CCVT–2P1	SRC CCVT DISC	SRC AØ CCVT	4/C–#10 SH	35	SRC LINE POTENTIALS
CCVT–2P2	SRC CCVT DISC	SRC BØ CCVT	4/C–#10 SH	10	SRC LINE POTENTIALS
CCVT–2P3	SRC CCVT DISC	SRC CØ CCVT	4/C–#10 SH	30	SRC LINE POTENTIALS
CCVT–3P	BUS T1 CCVT DISC	TB RACK (CTRL ENCL)	9/C–#10 SH	250	BUS T1 POTENTIALS
CCVT–3P2	BUS T1 CCVT DISC	BUS T1 BØ CCVT	4/C–#10 SH	10	BUS T1 POTENTIALS
PT–5P	BUS 1 PT DISC	TB RACK (CTRL ENCL)	9/C–#10 SH	210	BUS 1 POTENTIALS
PT–5P2	BUS 1 PT DISC	BUS 1 BØ PT	4/C–#10 SH	10	BUS 1 POTENTIALS
PT–6P	CT4 LINE PT DISC	TB RACK (CTRL ENCL)	9/C–#10 SH	140	CT4 LINE POTENTIALS
PT–6P1	CT4 LINE PT DISC	CT4 LINE AØ PT	4/C–#10 SH	30	CT4 LINE POTENTIALS
PT–6P2	CT4 LINE PT DISC	CT4 LINE BØ PT	4/C–#10 SH	10	CT4 LINE POTENTIALS
PT–6P3	CT4 LINE PT DISC	CT4 LINE CØ PT	4/C–#10 SH	30	CT4 LINE POTENTIALS
PT–7P	LNG3 LINE PT DISC	TB RACK (CTRL ENCL)	9/C–#10 SH	110	LNG3 LINE POTENTIALS
PT–7P1	LNG3 LINE PT DISC	LNG3 LINE AØ PT	4/C–#10 SH	30	LNG3 LINE POTENTIALS
PT–7P2	LNG3 LINE PT DISC	LNG3 LINE BØ PT	4/C–#10 SH	10	LNG3 LINE POTENTIALS
PT–7P3	LNG3 LINE PT DISC	LNG3 LINE CØ PT	4/C–#10 SH	30	LNG3 LINE POTENTIALS
PT–8P	BUS 2 PT DISC	TB RACK (CTRL ENCL)	9/C–#10 SH	190	BUS 2 POTENTIALS
PT–8P2	BUS 2 PT DISC	BUS 2 BØ PT	4/C–#10 SH	10	BUS 2 POTENTIALS
PT–9P	BF2 LINE PT DISC	TB RACK (CTRL ENCL)	9/C–#10 SH	155	BF2 LINE POTENTIALS
PT–9P1	BF2 LINE PT DISC	BF2 LINE AØ PT	4/C–#10 SH	30	BF2 LINE POTENTIALS
PT–9P2	BF2 LINE PT DISC	BF2 LINE BØ PT	4/C–#10 SH	10	BF2 LINE POTENTIALS
PT–9P3	BF2 LINE PT DISC	BF2 LINE CØ PT	4/C–#10 SH	30	BF2 LINE POTENTIALS
PT–10P	BF1 LINE PT DISC	TB RACK (CTRL ENCL)	9/C–#10 SH	135	BF1 LINE POTENTIALS
PT–10P1	BF1 LINE PT DISC	BF1 LINE AØ PT	4/C–#10 SH	30	BF1 LINE POTENTIALS
PT–10P2	BF1 LINE PT DISC	BF1 LINE BØ PT	4/C–#10 SH	10	BF1 LINE POTENTIALS
PT–10P3	BF1 LINE PT DISC	BF1 LINE CØ PT	4/C–#10 SH	30	BF1 LINE POTENTIALS

YARD EQUIPMENT CABLES

CABLE	FROM	TO	CABLE SIZE	LENGTH (FT.)	DESCRIPTION
LINE SWITCH AND FIBER CABLES AND MISCELLANEOUS					
LNG–COM	LNG OPGW SPLICE CASE	PANEL 1	FIBER–NOTE 2	250	LNG LINE FIBER
SRC–COM	SRC OPGW SPLICE CASE	PANEL 1	FIBER–NOTE 2	270	SRC LINE FIBER
CT4–COM	CT4 OPGW SPLICE CASE	PANEL 1	FIBER–NOTE 2	250	CT4 LINE FIBER
LNG3–COM	LNG3 OPGW SPLICE CASE	PANEL 1	FIBER–NOTE 2	235	LNG3 LINE FIBER
BF2–COM	BF2 OPGW SPLICE CASE	PANEL 1	FIBER–NOTE 2	230	BF2 LINE FIBER
BF1–COM	BF1 OPGW SPLICE CASE	PANEL 1	FIBER–NOTE 2	225	BF1 LINE FIBER
474–S1	SW 23474	TB RACK (CTRL ENCL)	12/C–#10 SH	95	SW 23474 STATUS
475–S1	SW 23475	TB RACK (CTRL ENCL)	12/C–#10 SH	200	SW 23475 STATUS
18–S1	SW 6WR18	TB RACK (CTRL ENCL)	12/C–#10 SH	140	SW 6WR18 STATUS
19–S1	SW 6WR19	TB RACK (CTRL ENCL)	12/C–#10 SH	160	SW 6WR19 STATUS
20–S1	SW 6WR20	TB RACK (CTRL ENCL)	12/C–#10 SH	155	SW 6WR20 STATUS
21–S1	SW 6WR21	TB RACK (CTRL ENCL)	12/C–#10 SH	175	SW 6WR21 STATUS
22–S1	SW 6WR22	TB RACK (CTRL ENCL)	12/C–#10 SH	300	SW 6WR22 STATUS
B69/WRC–S1	TB RACK (BEN FRENCH)	TB RACK (CTRL ENCL)	12/C–#10	600	INTERLOCKS TO CT4 VIA BF 69KV SUB
B69/WRC–C1	TB RACK (BEN FRENCH)	TB RACK (CTRL ENCL)	4/C–#10	600	CT4 CT'S

NOTES:
1. CABLE SHIELDS SHALL BE GROUNDED AT ONE END FOR ALL SHIELDED ("SH") CONTROL CABLES. GROUND SHIELDS AT TBR IN CONTROL ENCLOSURE.
2. FIBER CABLE SHALL BE ROUTED IN 1" INNERDUCT FOR THE ENTIRE ROUTE OF THE FIBER CABLE. FIBER CABLE WILL BE FURNISHED AND TERMINATED BY OWNER.

P:\04233\00DWGRECORD\WRC\CAD\WRC-E-702.DWG

DGR ENGINEERING
ROCK RAPIDS, IOWA
(712) 472-2531

DATE	DRAWN BY	NO.	APPROVED BY	REVISION DESCRIPTION
06-20	SMW	1	PDK	CONFORMING TO CONSTRUCTION RECORDS
01-19	KLV	0	PDK	FOR CONSTRUCTION

BLACK HILLS ENERGY
WEST RAPID CITY SUBSTATION
CABLE SCHEDULE
YARD EQUIPMENT CABLES

DRAWN BY KLV DATE 01-19
APPROVED BY PDK DATE 01-19
DWG NO. WRC-E-702
REVISION NO. 1

CONTROL ENCLOSURE CABLES

CABLE	FROM	TO	CABLE SIZE	LENGTH (FT.)	DESCRIPTION
AC STATION POWER CABLES					
AC–AC1	MTS	AC PANEL 1	1/C–4/0 (x3)		AC PANEL 1 SUPPLY POWER
AC–AC2	MTS	AC PANEL 2	1/C–4/0 (x3)		AC PANEL 2 SUPPLY POWER
BC1	BATTERY CHARGER	AC PANEL 1	2/C–#4		BATTERY CHARGER AC SUPPLY
AC POWER CABLES					
464–ACA	AC PANEL 1	TB RACK (CTRL ENCL)	3/C–#8		CB 23464 AC POWER
467–ACA	AC PANEL 2	TB RACK (CTRL ENCL)	3/C–#8		CB 23467 AC POWER
470–ACA	AC PANEL 1	TB RACK (CTRL ENCL)	3/C–#8		CB 23470 AC POWER
01–ACA	AC PANEL 2	TB RACK (CTRL ENCL)	3/C–#8		CB 6WR01 AC POWER
04–ACA	AC PANEL 1	TB RACK (CTRL ENCL)	3/C–#8		CB 6WR04 AC POWER
07–ACA	AC PANEL 2	TB RACK (CTRL ENCL)	3/C–#8		CB 6WR07 AC POWER
10–ACA	AC PANEL 1	TB RACK (CTRL ENCL)	3/C–#8		CB 6WR10 AC POWER
13–ACA	AC PANEL 2	TB RACK (CTRL ENCL)	3/C–#8		CB 6WR13 AC POWER
16–ACA	AC PANEL 1	TB RACK (CTRL ENCL)	3/C–#8		CB 6WR16 AC POWER
T1–ACA	AC PANEL 1	TB RACK (CTRL ENCL)	3/C–#6		XFMR T1 AC POWER
AC YARD RECEPTACLES AND YARD LIGHTING					
RCPT1A	AC PANEL 1	TB RACK (CTRL ENCL)	3/C–#6		YARD RECEPTACLE #1 AC POWER
RCPT2A	AC PANEL 2	TB RACK (CTRL ENCL)	3/C–#6		YARD RECEPTACLE #2 AC POWER
ACP2–C34	AC PANEL 2	PANEL 1	2/C–#10		RELAY PANEL POWER STRIP
ACP2–C35	AC PANEL 2	PANEL 2	2/C–#10		RELAY PANEL POWER STRIP
ACP2–C36	AC PANEL 2	PANEL 5	2/C–#10		RELAY PANEL POWER STRIP
ACP2–C37	AC PANEL 2	LIGHTING CONTACTOR	2/C–#10		YARD LIGHT CONTROL
ACP2–C38	AC PANEL 2	PANEL 9	2/C–#10		RELAY PANEL POWER STRIP
ACP2–C39	AC PANEL 2	LIGHTING CONTACTOR	2/C–#10		YARD LIGHT CKT #1
ACP2–C40	AC PANEL 2	LIGHTING CONTACTOR	2/C–#10		YARD LIGHT CKT #3
ACP2–C41	AC PANEL 2	LIGHTING CONTACTOR	2/C–#10		YARD LIGHT CKT #2
ACP2–C42	AC PANEL 2	LIGHTING CONTACTOR	2/C–#10		YARD LIGHT CKT #4
YL–AC39	LIGHTING CONTACTOR	TB RACK (CTRL ENCL)	2/C–#10		YARD LIGHT CKT #1
YL–AC40	LIGHTING CONTACTOR	TB RACK (CTRL ENCL)	2/C–#10		YARD LIGHT CKT #3
YL–AC41	LIGHTING CONTACTOR	TB RACK (CTRL ENCL)	2/C–#10		YARD LIGHT CKT #2
YL–AC42	LIGHTING CONTACTOR	TB RACK (CTRL ENCL)	2/C–#10		YARD LIGHT CKT #4
DC POWER CABLES					
DC–0A	BATTERY	DC XFR SW	4/0 (x2)		DC STATION POWER
DC–0B	DC XFR SW	DC TERMINAL BOX	4/0 (x2)		DC STATION POWER
DC–0C	DC TERMINAL BOX	BATTERY CHARGER	2/C–#4		BATTERY CHARGER DC POWER
DC1	DC TERMINAL BOX	DC PANEL 1	4/0 (x2)		DC PANEL 1 SUPPLY POWER
DC2	DC TERMINAL BOX	DC PANEL 2	4/0 (x2)		DC PANEL 2 SUPPLY POWER
DC1B	PANEL 1	DC PANEL 2	2/C–#10		BACKUP DC SUPPLY – PANEL 1
DC1P	PANEL 1	DC PANEL 1	2/C–#10		PRIMARY DC SUPPLY – PANEL 1
DC2B	PANEL 2	DC PANEL 2	2/C–#10		BACKUP DC SUPPLY – PANEL 2
DC2P	PANEL 2	DC PANEL 1	2/C–#10		PRIMARY DC SUPPLY – PANEL 2
DC3B	PANEL 3	DC PANEL 2	2/C–#10		BACKUP DC SUPPLY – PANEL 3
DC3P	PANEL 3	DC PANEL 1	2/C–#10		PRIMARY DC SUPPLY – PANEL 3
DC4B	PANEL 4	DC PANEL 2	2/C–#10		BACKUP DC SUPPLY – PANEL 4
DC4P	PANEL 4	DC PANEL 1	2/C–#10		PRIMARY DC SUPPLY – PANEL 4
DC5B	PANEL 5	DC PANEL 2	2/C–#10		BACKUP DC SUPPLY – PANEL 5
DC5P	PANEL 5	DC PANEL 1	2/C–#10		PRIMARY DC SUPPLY – PANEL 5
DC8B	PANEL 8	DC PANEL 2	2/C–#10		BACKUP DC SUPPLY – PANEL 8
DC8P	PANEL 8	DC PANEL 1	2/C–#10		PRIMARY DC SUPPLY – PANEL 8
DC9B	PANEL 9	DC PANEL 2	2/C–#10		BACKUP DC SUPPLY – PANEL 9
DC9P	PANEL 9	DC PANEL 1	2/C–#10		PRIMARY DC SUPPLY – PANEL 9
DC10B	PANEL 10	DC PANEL 2	2/C–#10		BACKUP DC SUPPLY – PANEL 10
DC10P	PANEL 10	DC PANEL 1	2/C–#10		PRIMARY DC SUPPLY – PANEL 10
CIRCUIT BREAKER DC POWER/CONTROL CABLE					
464–DC1A	DC PANEL 1	TB RACK (CTRL ENCL)	2/C–#6		CB 23464 PRIMARY DC
464–DC2A	DC PANEL 2	TB RACK (CTRL ENCL)	2/C–#10		CB 23464 BACKUP DC
464–S1A	PANEL 4	TB RACK (CTRL ENCL)	12/C–#10		CB 23464 CONTROLS
464–S1B	PANEL 3	TB RACK (CTRL ENCL)	4/C–#10		CB 23464 CONTROLS
464–S2A	PANEL 4	TB RACK (CTRL ENCL)	4/C–#10		CB 23464 CONTROLS
464–S3A	PANEL 2	TB RACK (CTRL ENCL)	7/C–#14		CB 23464 CONTROLS
467–DC1A	DC PANEL 1	TB RACK (CTRL ENCL)	2/C–#6		CB 23467 PRIMARY DC
467–DC2A	DC PANEL 2	TB RACK (CTRL ENCL)	2/C–#10		CB 23467 BACKUP DC
467–S1A	PANEL 3	TB RACK (CTRL ENCL)	12/C–#10		CB 23467 CONTROLS
467–S2A	PANEL 3	TB RACK (CTRL ENCL)	4/C–#10		CB 23467 CONTROLS
467–S3A	PANEL 2	TB RACK (CTRL ENCL)	7/C–#14		CB 23467 CONTROLS
470–DC1A	DC PANEL 1	TB RACK (CTRL ENCL)	2/C–#6		CB 23470 PRIMARY DC
470–DC2A	DC PANEL 2	TB RACK (CTRL ENCL)	2/C–#10		CB 23470 BACKUP DC
470–S1A	PANEL 3	TB RACK (CTRL ENCL)	12/C–#10		CB 23470 CONTROLS
470–S2A	PANEL 3	TB RACK (CTRL ENCL)	4/C–#10		CB 23470 CONTROLS
470–S3A	PANEL 2	TB RACK (CTRL ENCL)	7/C–#14		CB 23470 CONTROLS

CONTROL ENCLOSURE CABLES

CABLE	FROM	TO	CABLE SIZE	LENGTH (FT.)	DESCRIPTION
CIRCUIT BREAKER DC POWER/CONTROL CABLE					
01–DC1A	DC PANEL 1	TB RACK (CTRL ENCL)	2/C–#6		CB 6WR01 PRIMARY DC
01–DC2A	DC PANEL 2	TB RACK (CTRL ENCL)	2/C–#10		CB 6WR01 BACKUP DC
01–S1A	PANEL 8	TB RACK (CTRL ENCL)	12/C–#10		CB 6WR01 CONTROLS
01–S2A	PANEL 8	TB RACK (CTRL ENCL)	4/C–#10		CB 6WR01 CONTROLS
01–S3A	PANEL 2	TB RACK (CTRL ENCL)	7/C–#14		CB 6WR01 CONTROLS
04–DC1A	DC PANEL 1	TB RACK (CTRL ENCL)	2/C–#6		CB 6WR04 PRIMARY DC
04–DC2A	DC PANEL 2	TB RACK (CTRL ENCL)	2/C–#10		CB 6WR04 BACKUP DC
04–S1A	PANEL 8	TB RACK (CTRL ENCL)	12/C–#10		CB 6WR04 CONTROLS
04–S2A	PANEL 8	TB RACK (CTRL ENCL)	4/C–#10		CB 6WR04 CONTROLS
04–S3A	PANEL 2	TB RACK (CTRL ENCL)	7/C–#14		CB 6WR04 CONTROLS
07–DC1A	DC PANEL 1	TB RACK (CTRL ENCL)	2/C–#6		CB 6WR07 PRIMARY DC
07–DC2A	DC PANEL 2	TB RACK (CTRL ENCL)	2/C–#10		CB 6WR07 BACKUP DC
07–S1A	PANEL 8	TB RACK (CTRL ENCL)	12/C–#10		CB 6WR07 CONTROLS
07–S2A	PANEL 8	TB RACK (CTRL ENCL)	4/C–#10		CB 6WR07 CONTROLS
07–S3A	PANEL 2	TB RACK (CTRL ENCL)	7/C–#14		CB 6WR07 CONTROLS
10–DC1A	DC PANEL 1	TB RACK (CTRL ENCL)	2/C–#6		CB 6WR10 PRIMARY DC
10–DC2A	DC PANEL 2	TB RACK (CTRL ENCL)	2/C–#10		CB 6WR10 BACKUP DC
10–S1A	PANEL 9	TB RACK (CTRL ENCL)	12/C–#10		CB 6WR10 CONTROLS
10–S2A	PANEL 9	TB RACK (CTRL ENCL)	4/C–#10		CB 6WR10 CONTROLS
10–S3A	PANEL 2	TB RACK (CTRL ENCL)	7/C–#14		CB 6WR10 CONTROLS
13–DC1A	DC PANEL 1	TB RACK (CTRL ENCL)	2/C–#6		CB 6WR13 PRIMARY DC
13–DC2A	DC PANEL 2	TB RACK (CTRL ENCL)	2/C–#10		CB 6WR13 BACKUP DC
13–S1A	PANEL 9	TB RACK (CTRL ENCL)	12/C–#10		CB 6WR13 CONTROLS
13–S2A	PANEL 9	TB RACK (CTRL ENCL)	4/C–#10		CB 6WR13 CONTROLS
13–S3A	PANEL 2	TB RACK (CTRL ENCL)	7/C–#14		CB 6WR13 CONTROLS
16–DC1A	DC PANEL 1	TB RACK (CTRL ENCL)	2/C–#6		CB 6WR16 PRIMARY DC
16–DC2A	DC PANEL 2	TB RACK (CTRL ENCL)	2/C–#10		CB 6WR16 BACKUP DC
16–S1A	PANEL 5	TB RACK (CTRL ENCL)	12/C–#10		CB 6WR16 CONTROLS
16–S1B	PANEL 9	TB RACK (CTRL ENCL)	4/C–#10		CB 6WR16 CONTROLS
16–S2A	PANEL 5	TB RACK (CTRL ENCL)	4/C–#10		CB 6WR16 CONTROLS
16–S3A	PANEL 2	TB RACK (CTRL ENCL)	7/C–#14		CB 6WR16 CONTROLS
LINE SWITCH & TRANSFORMER DC POWER/CONTROL CABLE					
T1–DCA	DC PANEL 1	TB RACK (CTRL ENCL)	2/C–#10		XFMR T1 DC POWER
T1–S1A	PANEL 5	TB RACK (CTRL ENCL)	4/C–#10		XFMR T1 CONTROLS
T1–S1B	PANEL 4	TB RACK (CTRL ENCL)	4/C–#10		XFMR T1 CONTROLS
475–S1A	PANEL 3	TB RACK (CTRL ENCL)	4/C–#10		SWITCH 23475 STATUS
474–S1A	PANEL 3	TB RACK (CTRL ENCL)	4/C–#10		SWITCH 23474 STATUS
18–S1A	PANEL 8	TB RACK (CTRL ENCL)	4/C–#10		SWITCH 6WR18 STATUS
19–S1A	PANEL 8	TB RACK (CTRL ENCL)	4/C–#10		SWITCH 6WR19 STATUS
20–S1A	PANEL 9	TB RACK (CTRL ENCL)	4/C–#10		SWITCH 6WR20 STATUS
21–S1A	PANEL 9	TB RACK (CTRL ENCL)	4/C–#10		SWITCH 6WR21 STATUS
22–S1A	PANEL 5	TB RACK (CTRL ENCL)	4/C–#10		SWITCH 6WR22 STATUS
22–S1B	PANEL 4	TB RACK (CTRL ENCL)	9/C–#10		SWITCH 6WR22 STATUS
CT CABLES					
464–C1A	PANEL 4	TB RACK (CTRL ENCL)	9/C–#10		CB 23464 CT'S
464–C2A	PANEL 3	TB RACK (CTRL ENCL)	9/C–#10		CB 23464 CT'S
467–C1A	PANEL 3	TB RACK (CTRL ENCL)	9/C–#10		CB 23467 CT'S
467–C2A	PANEL 3	TB RACK (CTRL ENCL)	9/C–#10		CB 23467 CT'S
470–C1A	PANEL 4	TB RACK (CTRL ENCL)	9/C–#10		CB 23470 CT'S
470–C2A	PANEL 3	TB RACK (CTRL ENCL)	9/C–#10		CB 23470 CT'S
01–C1A	PANEL 8	TB RACK (CTRL ENCL)	9/C–#10		CB 6WR01 CT'S
01–C2A	PANEL 10	TB RACK (CTRL ENCL)	9/C–#10		CB 6WR01 CT'S
04–C1A	PANEL 8	TB RACK (CTRL ENCL)	9/C–#10		CB 6WR04 CT'S
04–C2A	PANEL 8	TB RACK (CTRL ENCL)	9/C–#10		CB 6WR04 CT'S
07–C1A	PANEL 5	TB RACK (CTRL ENCL)	9/C–#10		CB 6WR07 CT'S
07–C2A	PANEL 8	TB RACK (CTRL ENCL)	9/C–#10		CB 6WR07 CT'S
10–C1A	PANEL 9	TB RACK (CTRL ENCL)	9/C–#10		CB 6WR10 CT'S
10–C2A	PANEL 10	TB RACK (CTRL ENCL)	9/C–#10		CB 6WR10 CT'S
13–C1A	PANEL 9	TB RACK (CTRL ENCL)	9/C–#10		CB 6WR13 CT'S
13–C2A	PANEL 9	TB RACK (CTRL ENCL)	9/C–#10		CB 6WR13 CT'S
16–C1A	PANEL 5	TB RACK (CTRL ENCL)	9/C–#10		CB 6WR16 CT'S
16–C2A	PANEL 9	TB RACK (CTRL ENCL)	9/C–#10		CB 6WR16 CT'S
T1–C1A	PANEL 4	TB RACK (CTRL ENCL)	4/C–#10		XFMR T1 CT'S
T1–C2A	PANEL 5	TB RACK (CTRL ENCL)	9/C–#10		XFMR T1 CT'S
T1–C3A	PANEL 5	TB RACK (CTRL ENCL)	9/C–#10		XFMR T1 CT'S
T1–C4A	PANEL 5	TB RACK (CTRL ENCL)	4/C–#10		XFMR T1 CT'S

P:\040239\00\DWG\RECORD\WRC\CAD\WRC-E-705.DWG

DGR ENGINEERING
ROCK RAPIDS, IOWA
(712) 472-2531

DATE	DRAWN BY	NO.	APPROVED BY	REVISION DESCRIPTION
06-20	SMW	1	PDK	CONFORMING TO CONSTRUCTION RECORDS
10-19	SMW	0	PDK	FOR CONSTRUCTION

BLACK HILLS ENERGY

WEST RAPID CITY SUBSTATION

CABLE SCHEDULE
CONTROL ENCLOSURE CABLES

DRAWN BY SMW DATE 1-19
APPROVED BY PDK DATE 1-19
DWG NO. WRC-E-705
REVISION NO. 1

CONTROL ENCLOSURE CABLES					
CABLE	FROM	TO	CABLE SIZE	LENGTH (FT.)	DESCRIPTION
CCVT/PT CABLES					
CCVT-1PA	PANEL 3	TB RACK (CTRL ENCL)	9/C-#10		023 LINE POTENTIALS
CCVT-1PB	PANEL 4	TB RACK (CTRL ENCL)	9/C-#10		023 LINE POTENTIALS
CCVT-1PC	PANEL 5	TB RACK (CTRL ENCL)	4/C-#10		023 LINE POTENTIALS
CCVT-2PA	PANEL 3	TB RACK (CTRL ENCL)	9/C-#10		SRC LINE POTENTIALS
CCVT-2PB	PANEL 5	TB RACK (CTRL ENCL)	4/C-#10		SRC LINE POTENTIALS
CCVT-3PA	PANEL 3	TB RACK (CTRL ENCL)	4/C-#10		230 kV BUS T1 POTENTIALS
CCVT-3PB	PANEL 4	TB RACK (CTRL ENCL)	4/C-#10		230 kV BUS T1 POTENTIALS
PT-5PA	PANEL 5	TB RACK (CTRL ENCL)	2/C-#10		69 kV BUS 1 POTENTIALS
PT-5PB	PANEL 8	TB RACK (CTRL ENCL)	2/C-#10		69 kV BUS 1 POTENTIALS
PT-6PA	PANEL 8	TB RACK (CTRL ENCL)	9/C-#10		CT4 LINE POTENTIALS
PT-7PA	PANEL 8	TB RACK (CTRL ENCL)	9/C-#10		LNG3 LINE POTENTIALS
PT-8PA	PANEL 8	TB RACK (CTRL ENCL)	2/C-#10		69 kV BUS 2 POTENTIALS
PT-8PB	PANEL 9	TB RACK (CTRL ENCL)	2/C-#10		69 kV BUS 2 POTENTIALS
PT-9PA	PANEL 9	TB RACK (CTRL ENCL)	9/C-#10		BF2 LINE POTENTIALS
PT-9PB	PANEL 5	TB RACK (CTRL ENCL)	4/C-#10		BF2 LINE POTENTIALS
PT-10PA	PANEL 9	TB RACK (CTRL ENCL)	9/C-#10		BF1 LINE POTENTIALS
PANEL INTERFACE CABLES					
P1P2A	PANEL 1	PANEL 2	4/C-#10		PANEL INTERFACE
P2P4A	PANEL 2	PANEL 4	4/C-#10		PANEL INTERFACE
P2P10A	PANEL 2	PANEL 10	12/C-#10		PANEL INTERFACE
P3P4A	PANEL 3	PANEL 4	12/C-#10		PANEL INTERFACE
P3P4B	PANEL 3	PANEL 4	12/C-#10		PANEL INTERFACE
P3P5A	PANEL 3	PANEL 5	12/C-#10		PANEL INTERFACE
P4P5A	PANEL 4	PANEL 5	12/C-#10		PANEL INTERFACE
P4P5B	PANEL 4	PANEL 5	12/C-#10		PANEL INTERFACE
P4P8A	PANEL 4	PANEL 8	12/C-#10		PANEL INTERFACE
P5P8A	PANEL 5	PANEL 8	12/C-#10		PANEL INTERFACE
P5P9A	PANEL 5	PANEL 9	12/C-#10		PANEL INTERFACE
P5P10A	PANEL 5	PANEL 10	12/C-#10		PANEL INTERFACE
P8P10A	PANEL 8	PANEL 10	12/C-#10		PANEL INTERFACE
P9P10A	PANEL 9	PANEL 10	12/C-#10		PANEL INTERFACE
BC2	PANEL 2	BATT CHGR	2/C-#10		BATT CHARGER ALARM
86T4-04	TB RACK (CTRL ENCL)	TB RACK (CTRL ENCL)	4/C-#10		CT4 INTERLOCKS
86T4-07	TB RACK (CTRL ENCL)	TB RACK (CTRL ENCL)	4/C-#10		CT4 INTERLOCKS
04/07A	TB RACK (CTRL ENCL)	TB RACK (CTRL ENCL)	4/C-#10		6WR04 CT'S TO CT4
04/07B	TB RACK (CTRL ENCL)	TB RACK (CTRL ENCL)	4/C-#10		6WR07 CT'S TO CT4
86T4-BFI	PANEL 8	TB RACK (CTRL ENCL)	2/C-#10		CT4 BFI

P:\040239\00\DWGRECORD\WRC\CAD\WRC-E-706.DWG

DGR ENGINEERING
ROCK RAPIDS, IOWA
(712) 472-2531

DATE	DRAWN BY	NO.	APPROVED BY	REVISION DESCRIPTION
06-20	SMW	1	PDK	CONFORMING TO CONSTRUCTION RECORDS
10-19	SMW	0	PDK	FOR CONSTRUCTION

BLACK HILLS ENERGY

WEST RAPID CITY SUBSTATION

CABLE SCHEDULE
CONTROL ENCLOSURE CABLES

DRAWN BY SMW DATE 1-19
APPROVED BY PDK DATE 1-19

DWG NO. WRC-E-706

REVISION NO. 1